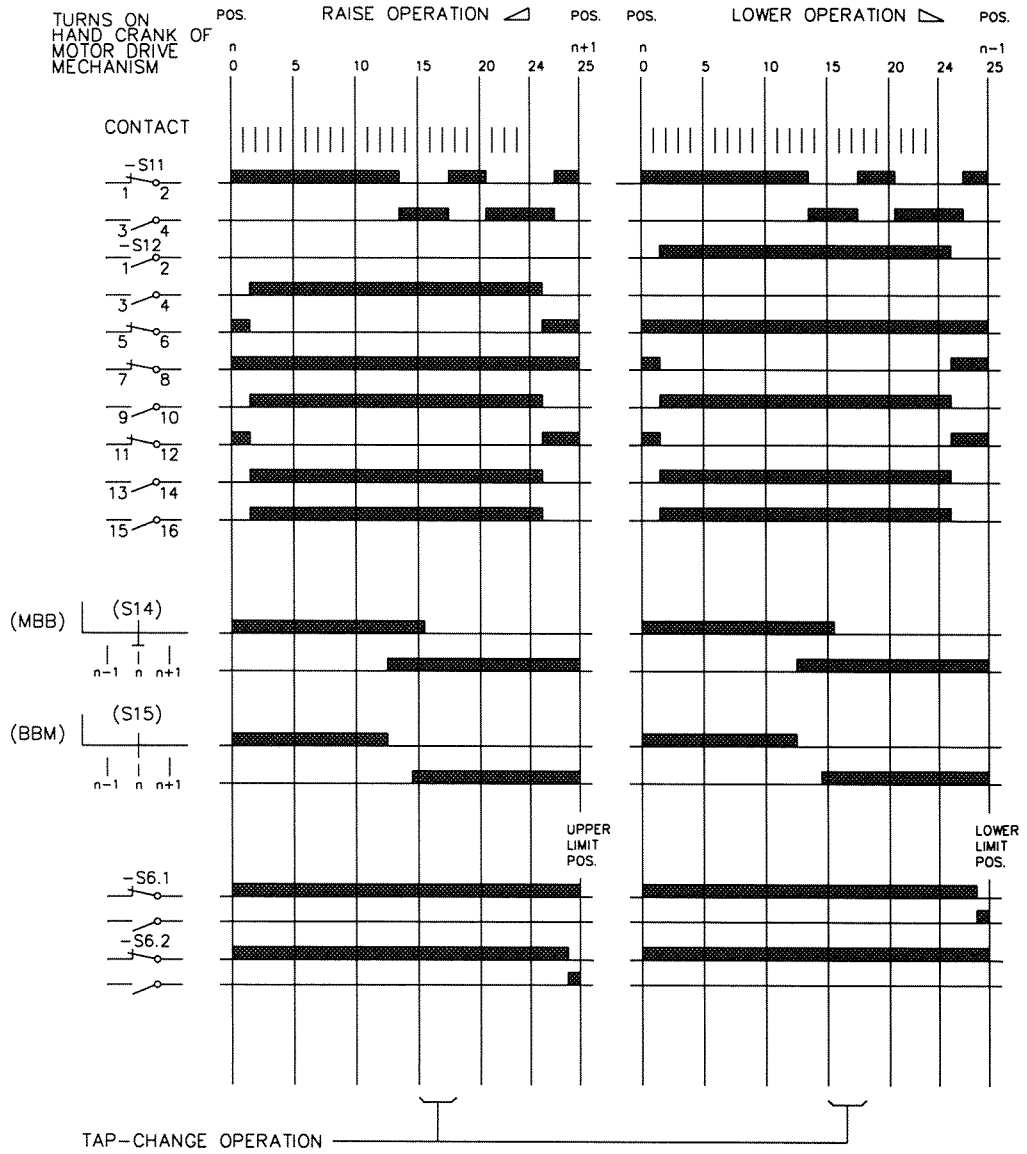

K1 Contactor, step-by-step operation
K2 Contactor, raise
K3 Contactor, lower
K6 Time relay, running-through protection
M1 Motor
Q1 Motor protective switch
S1 Control selector switch
S2 Control switch
S5 Interlocking switch, open when hand crank is fitted
S6 Cam switch (Limit switch)
S8 Push button, EMERGENCY STOP
S11 Cam switch
  1-2 Starting contact
S12 Cam switch
  1-2, 3-4 Maintaining contact
  5-6, 7-8 Interlocking contact
  9-10, 11-12 Auxiliary contact
  13-14, 15-16 Auxiliary contact
S15 Continuation contact
X Terminal board group

FOR HEATER, LIGHT CIRCUIT AND
TAP-POSITION TRANSMITTER No. S14 ETC,

SEE SEPARATE DIAGRAMS.

Raise operation
Lower operation
U Upper limit pos.
L Lower limit pos.
Remote control
Local control
Protective earth
Crank

We reserve all rights in this document and in the information contained therein. Reproduction, use or disclosure to third parties without express authority is strictly forbidden. © ABB Components AB

Based on	Prepared 2002-10-26 TOLA	Circuit Diagram Motor-Drive Mechanism TYPE BUE	
	Approved 2002-11-28 THLA		
		ABB	Resp dept COM/FOK · Rev ind · Lang · Sheet 1 · Cont 2
			5483 537-18

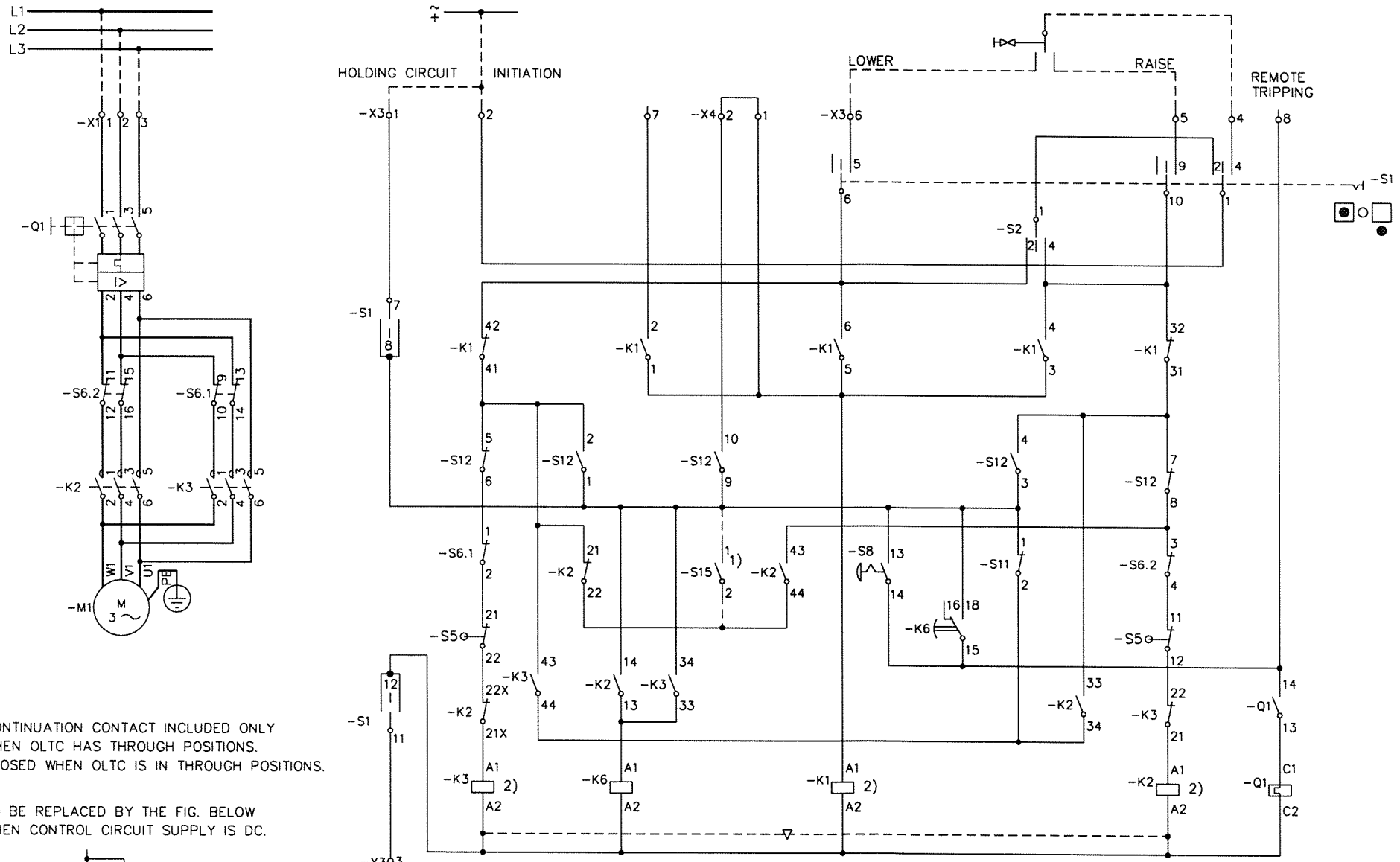

1) CONTINUATION CONTACT INCLUDED ONLY WHEN OLTC HAS THROUGH POSITIONS. CLOSED WHEN OLTC IS IN THROUGH POSITIONS.

2) TO BE REPLACED BY THE FIG. BELOW WHEN CONTROL CIRCUIT SUPPLY IS DC.

WIRING TABLE: 5483 482-ATU

POWER SUPPLIES ACCORDING TO RATING PLATE OF TAP-CHANGER.

We reserve all rights in this document and in the information contained therein. Reproduction, use or disclosure to third parties without express authority is strictly forbidden. © ABB Components AB

Based on	Prepared 2002-10-26 TOLA	Circuit Diagram Motor-Drive Mechanism TYPE BUE	=MD
	Approved 2002-11-28 THLA		Resp dept COM/FOK
		ABB	5483 537-18

Rev ind | Lang | Sheet 2 | Cont 3

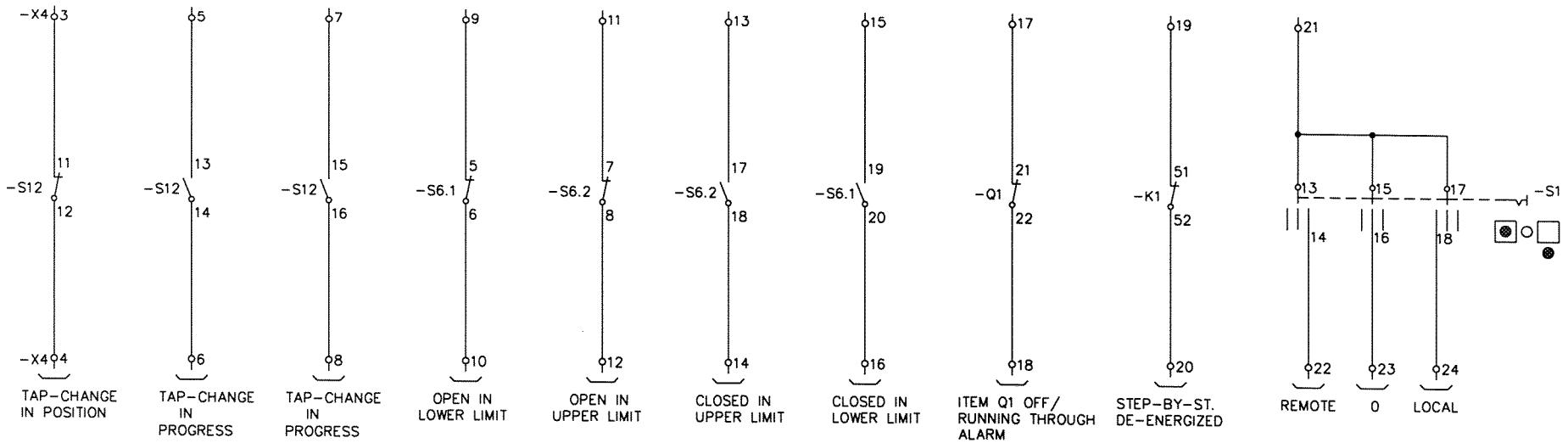

We reserve all rights in this document and in the information contained therein. Reproduction, use or disclosure to third parties without express authority is strictly forbidden. © ABB Components AB

Based on	Prepared 2002-10-26 TOLA	Circuit Diagram Motor-Drive Mechanism TYPE BUE	=MD
	Approved 2002-11-28 THLA		Resp dept COM/FOK
		ABB	5483 537-18

Rev ind | Lang | Sheet 3 | Cont –