Doc. N.° 1SDH002013A1502 - B2062

SACE Tmax XT

Sostituzione Rating Plug per Ekip Dip LS/I - XT7M - XT7
Changing the rating plug for Ekip Dip LS/I - XT7M - XT7
Austausch des Rating Plug für Ekip Dip LS/I - XT7M - XT7
Remplacement Rating Plug pour Ekip Dip LS/I - XT7M - XT7
Sustitución Rating Plug para Ekip Dip LS/I - XT7M - XT7
为Ekip Dip LS/I - XT7M - XT7 - 更换Rating Plug插头

XT7M - XT7

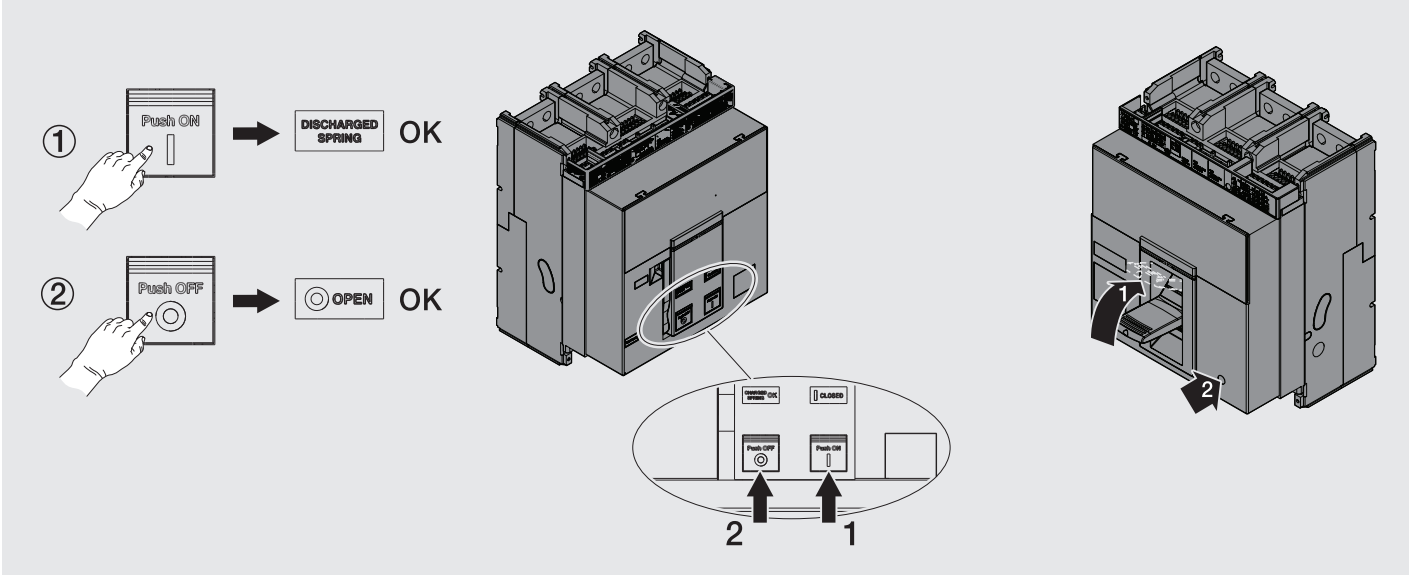

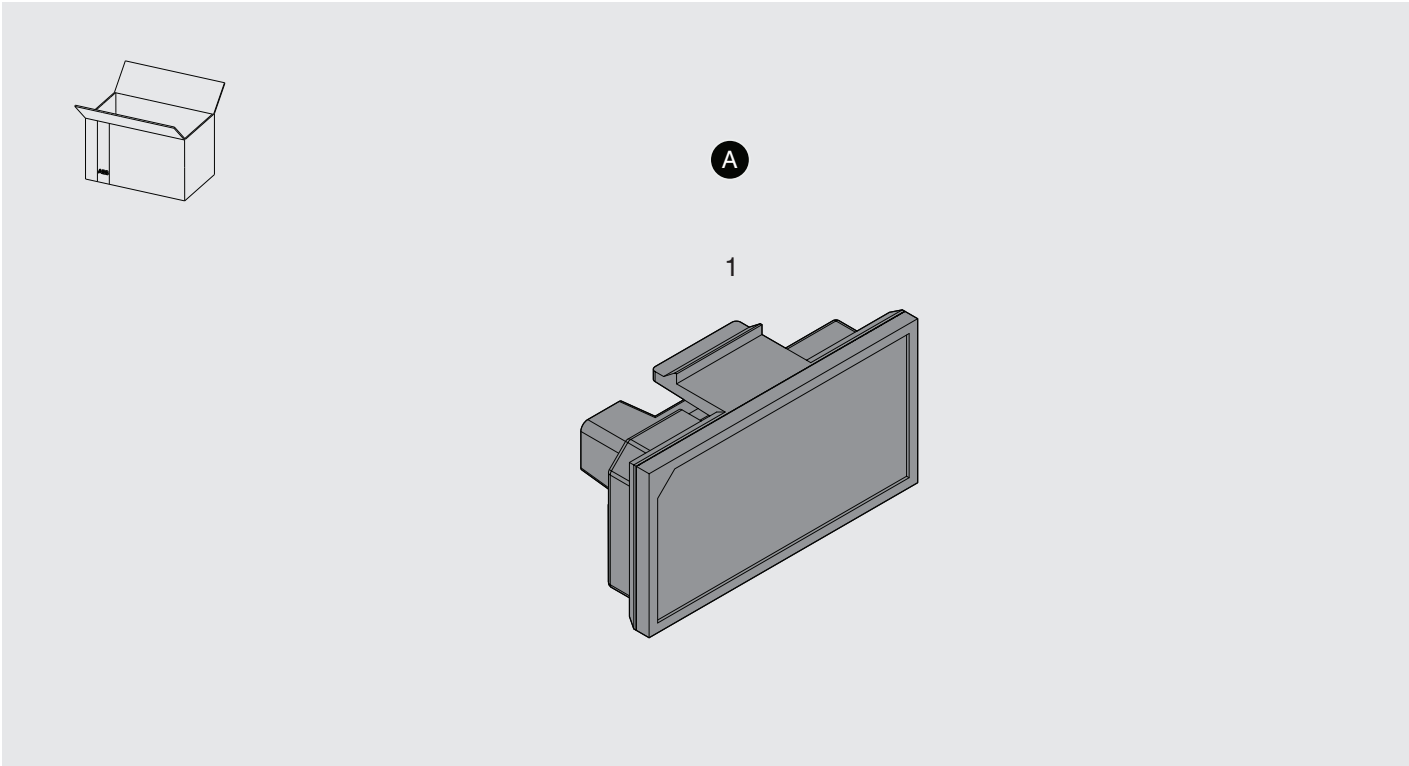

1

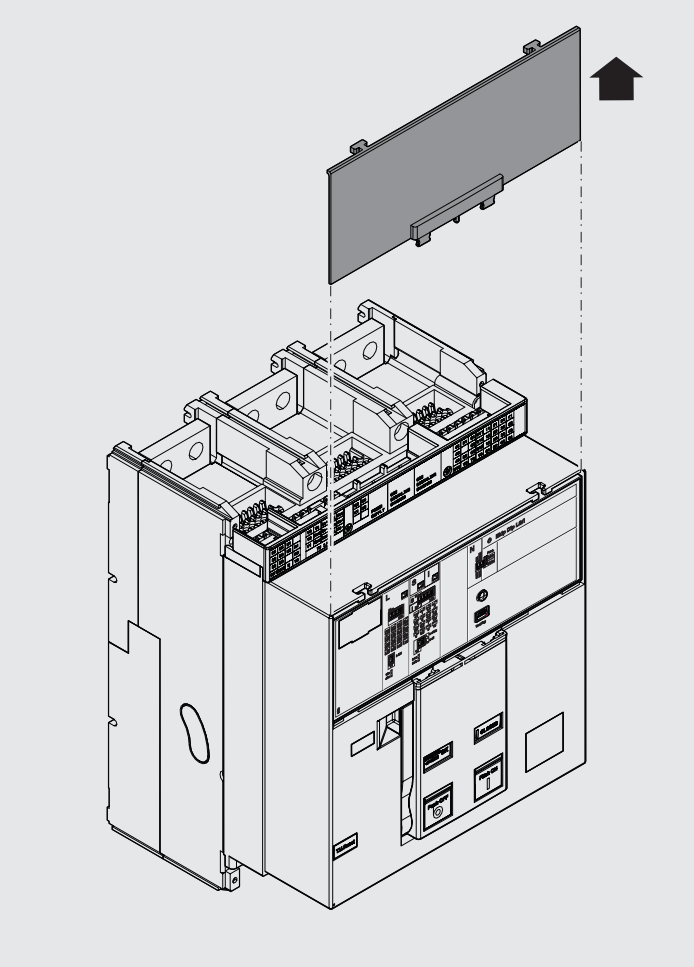

2

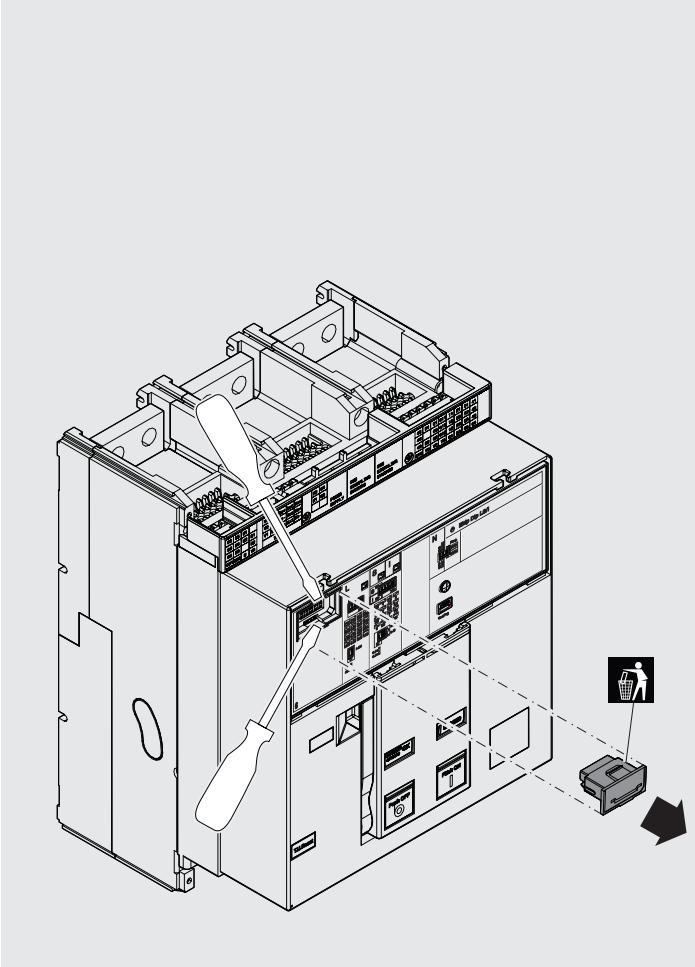

3

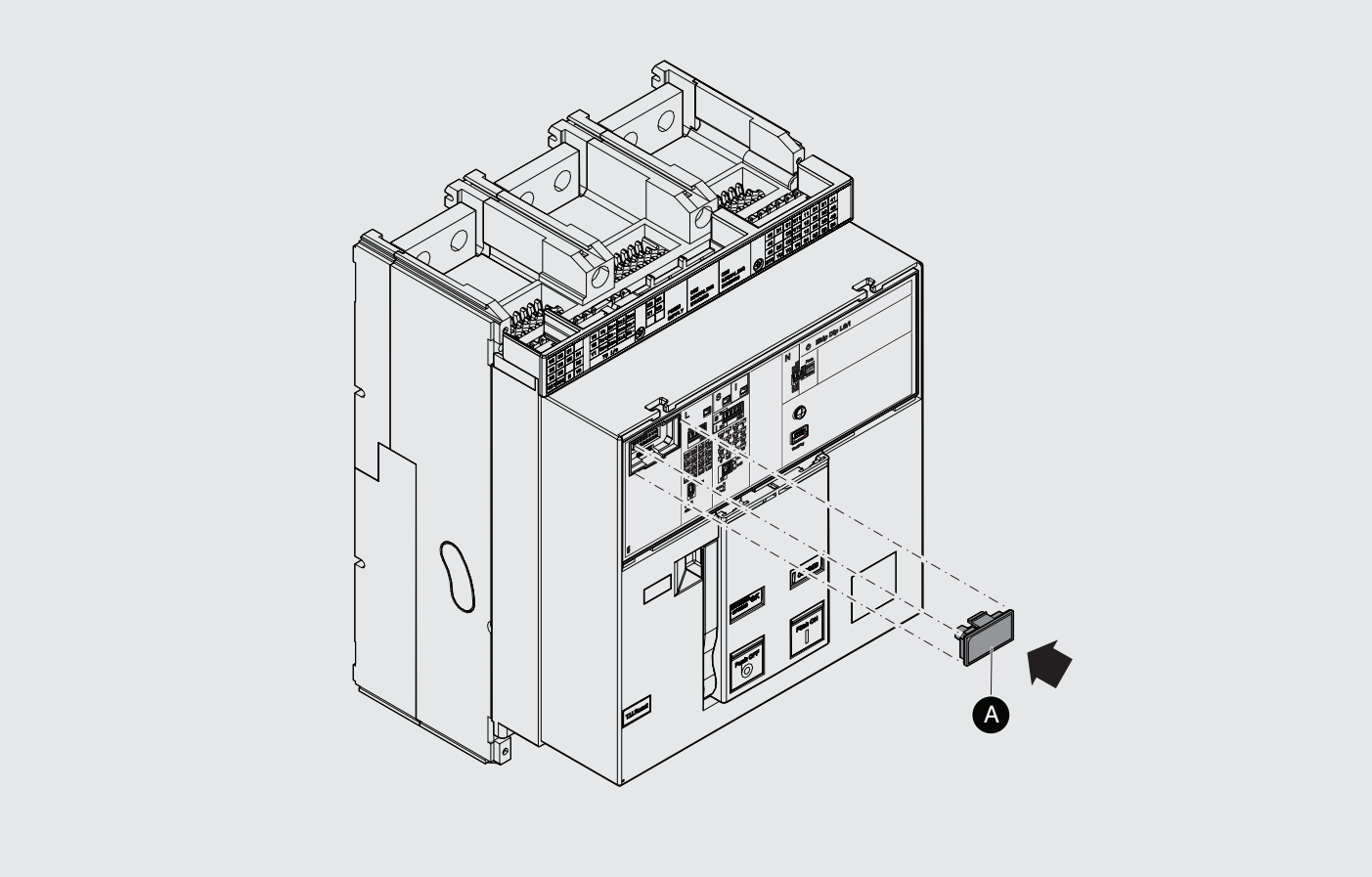

© Copyright 2013-2018 ABB. All rights reserved.
www.abb.com