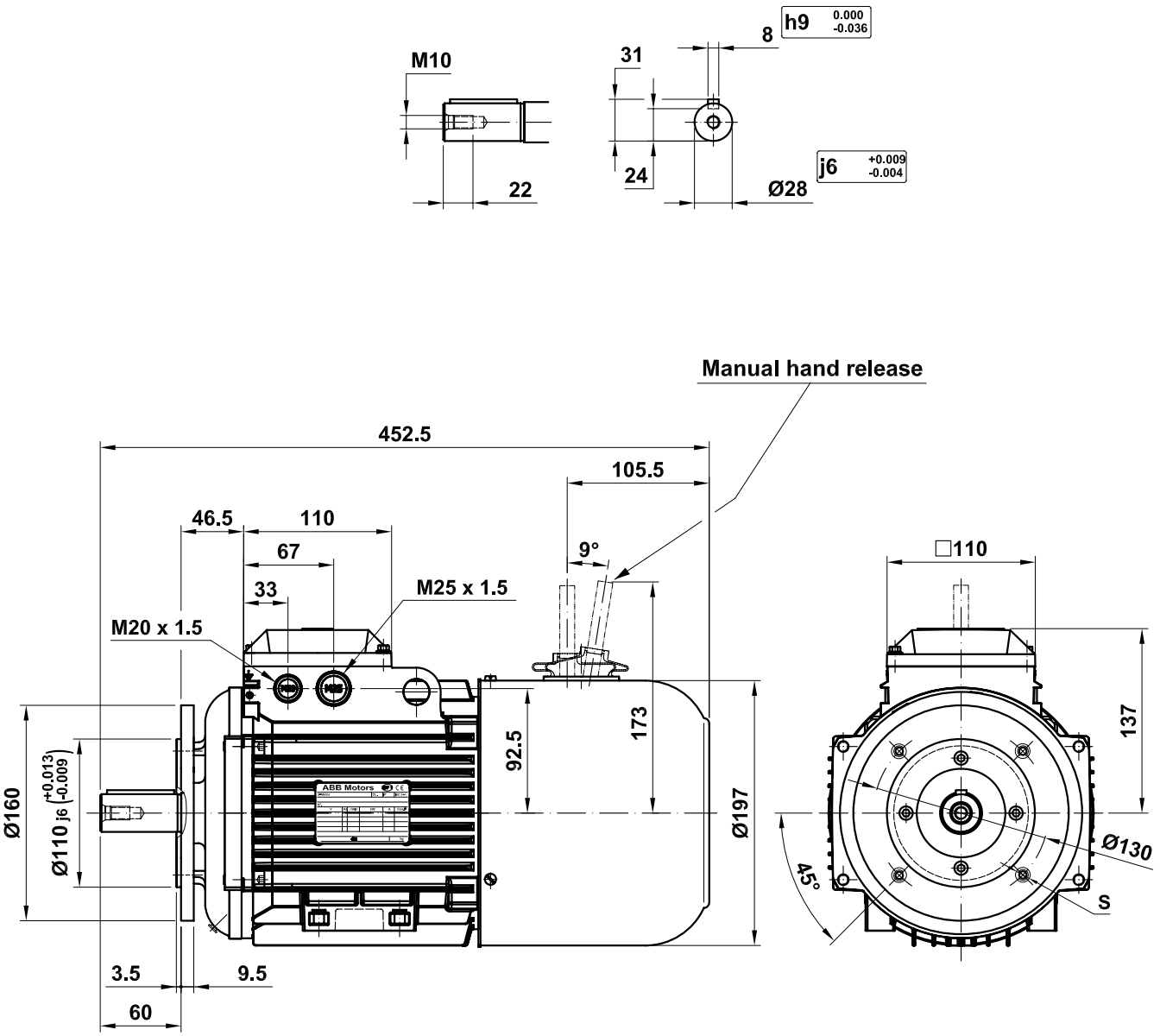

S = { Ø11 – Special IM 3001 / M8 – Special IM 3601 }

M3ARF/S 100

(*) Except 100 LD

Motor Dimension Print	Motor Type : M3ARF/S 100 L IM-B5(14) FF(T)-130 (*)	Document Nº : A1.4936 / 3D: A2.4363

Description :

Brake motor flange mounted special (2-pieces) IM3001 or IM3601

Unit : Discrete Automation&Motion-Fáb. Motores	Issued by : EMD/ G.Gállego	Replaces : To date 2008-05-09
Date : 2010-10-05	Approved by : EMD/ G.Blanes	Replaced by :

Asea Brown Boveri, S.A.

Customer Reference :

ABB