We reserve all rights in this document and in the information contained therein. Reproduction, use or disclosure to third parties without express authority is strictly forbidden. Copr. ABB AB

Table of contents

Part of product	Sheet
Designation for 3U, 1/1x19" casing with 1 TRM slot and 1 AIM slot	2
Communication module (COM05)	3
Power supply module 24–30 VDC (PSM01)	4
Power supply module 48–125 VDC (PSM02)	5
Power supply module 110–250 VDC, 100–240 VAC (PSM03)	6
Transformer module (TRM01)	7
Analog input module (AIM01)	8
Binary input/output module (BIO01)	9

We reserve all rights in this document and in the information contained therein. Reproduction, use or disclosure to third parties without express authority is strictly forbidden. Copr. ABB AB

1/1x19"

Rear view slot

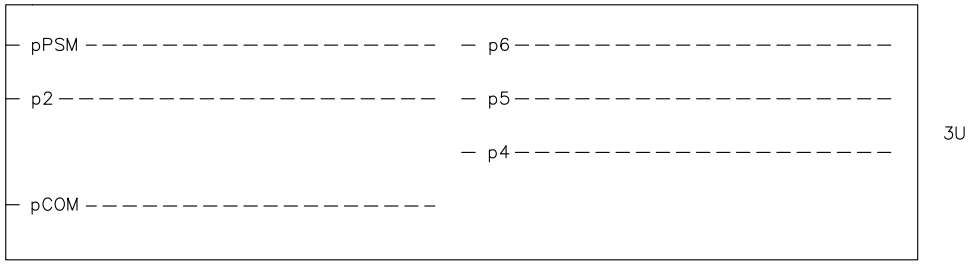

p= Position

Rear view terminal

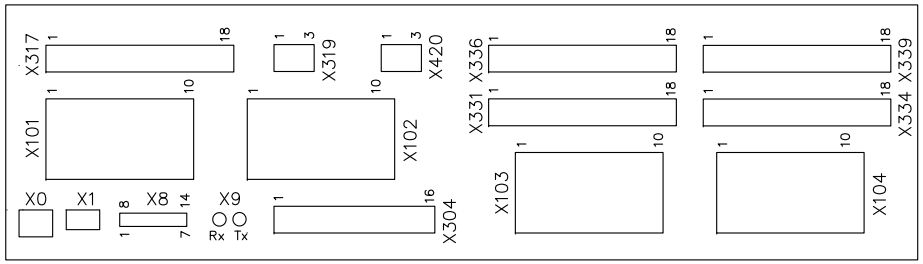

Designation for 3U, 1/1x19" casing with 1 TRM and 1 AIM

Module	Slot	Terminal
COM05	pCOM	X0, X1, X8, X9, X304
TRM01	p2	X101, X102
PSM01 PSM02 PSM03	pPSM	X317, X319, X420
AIM01	p4	X103, X104
BIO01	p5	X331, X334
BIO01	p6	X336, X339

Compression or ringlug terminals

Based on	Prepared 2013-01-24	Agneta Rydh	Title Connection Diagram REB650 (HiZ/3Ph) A03A ANSI symbols
	Approved 2013-01-29	Patrik Nyback	
	Project		

Rev	Rev. Note	Date	Name

ABB AB

Doc.des.	Doc.kind	Ref.des.	
Resp.dept.	PSTP/TPLA	Rev.ind.	Lang. en
Doc.No. 1MRK006502-MD			Sheet 2
			Cont. 3

We reserve all rights in this document and in the information contained therein. Reproduction, use or disclosure to third parties without express authority is strictly forbidden. Copr. ABB AB

Communication module COM05

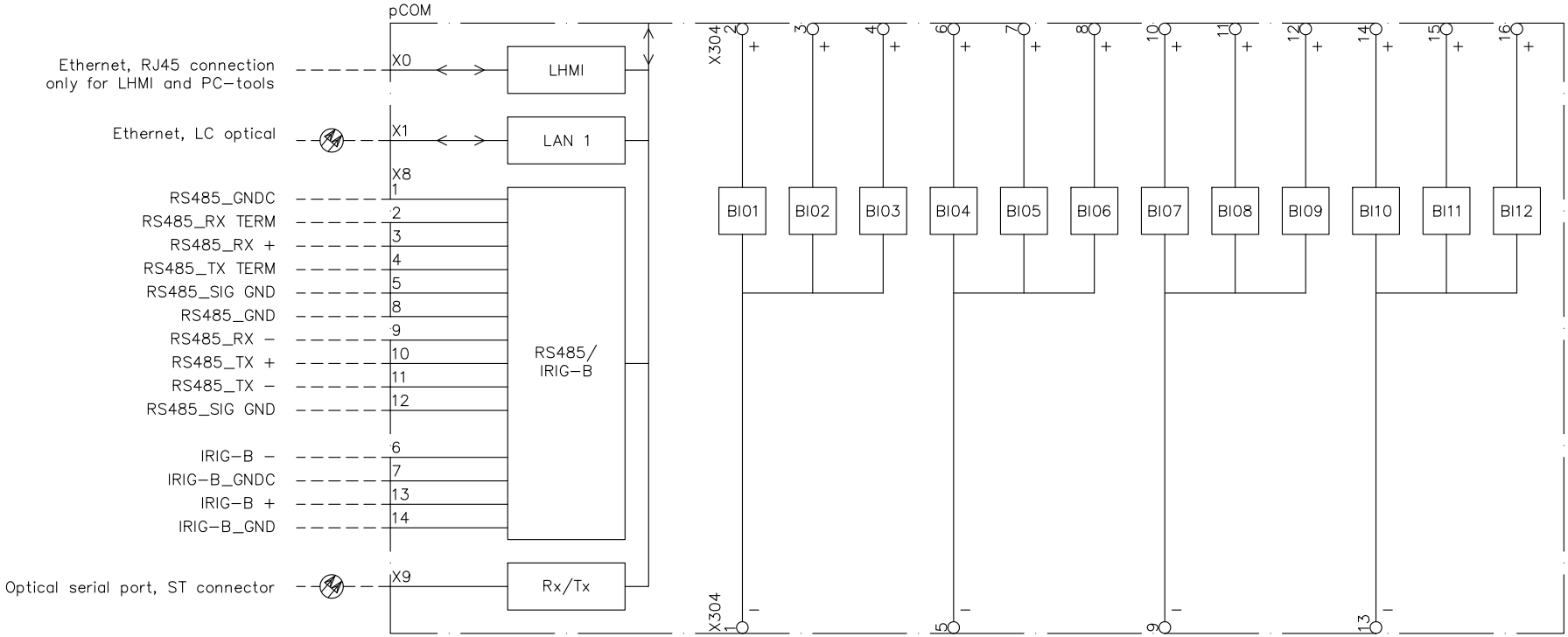

Observe polarity sequence

Configuration plant adapted

BI01	Z1_BLOCK
BI02	Z1_TRIP_BLK
BI03	Z1_LCKOUT_RST
BI04	Z2_BLOCK
BI05	Z2_TRIP_BLK
BI06	Z2_LCKOUT_RST
BI07	Z3_BLOCK
BI08	Z3_TRIP_BLK
BI09	Z3_LCKOUT_RST
BI10	ACTV_TESTMODE
BI11	SPARE
BI12	SPARE

Based on	Prepared 2013-01-24	Agneta Rydh	Title Connection Diagram REB650 (HiZ/3Ph) A03A ANSI symbols
	Approved 2013-01-29	Patrik Nyback	
	Project		

Rev	Rev. Note	Date	Name

ABB AB

Doc.des.	Doc.kind
Ref.des.	
Resp.dept.	PSTP/TPLA
Rev.ind.	
Lang.	en
Sheet	3
Cont.	4
Doc.No.	1MRK006502-MD

We reserve all rights in this document and in the information contained therein. Reproduction, use or disclosure to third parties without express authority is strictly forbidden. Copr. ABB AB

Power supply module PSM01 24–30 VDC

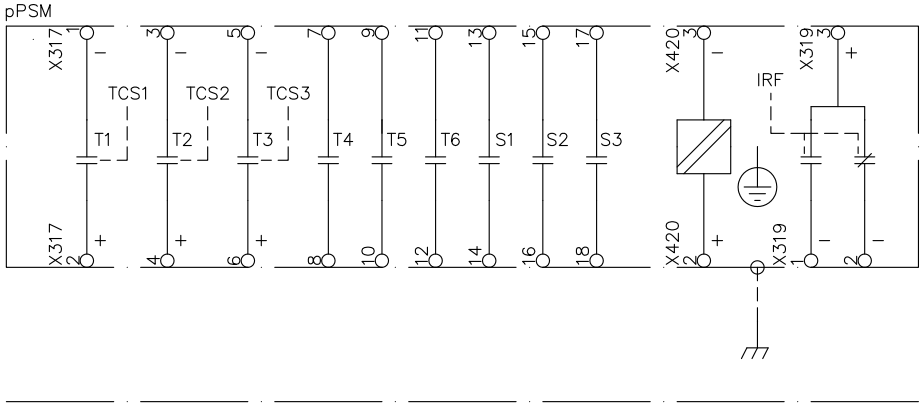

Observe polarity sequence

Configuration plant adapted

T1	Z1_DIFF_TRIP
T2	Z2_DIFF_TRIP
T3	Z3_DIFF_TRIP
T4	Z1_DIFF_TRIP
T5	Z2_DIFF_TRIP
T6	Z3_DIFF_TRIP
S1	BUS1_V_TRIP
S2	BUS2_V_TRIP
S3	50BF_TRIP
	Auxiliary supply EL
	Protective earth
	Normal
	Fail

Based on	Prepared 2013-01-24 Agneta Rydh	Title Connection Diagram REB650 (HiZ/3Ph) A03A ANSI symbols	Doc.des. Doc.kind / Ref.des.
	Approved 2013-01-29 Patrik Nyback		Resp.dept. PSTP/TPLA / Rev.ind. / Lang. en
Rev / Rev. Note / Date / Name	Project	ABB AB	Doc.No. 1MRK006502-MD / Sheet 4 / Cont. 5

We reserve all rights in this document and in the information contained therein. Reproduction, use or disclosure to third parties without express authority is strictly forbidden. Copr. ABB AB

Power supply module PSM02 48–125 VDC

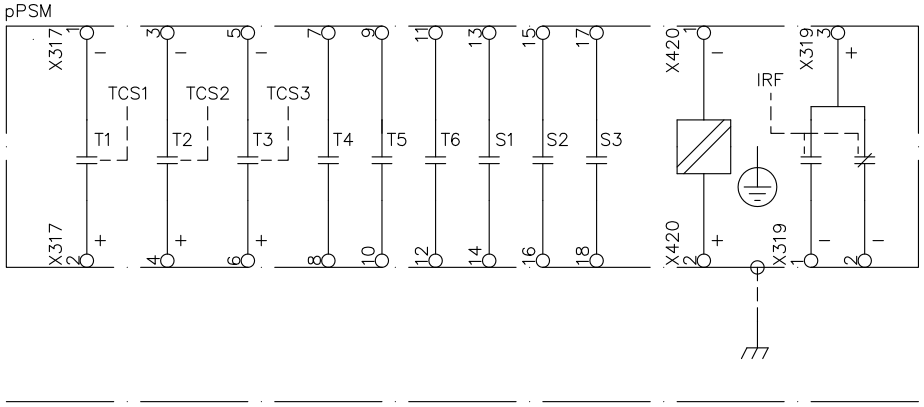

Observe polarity sequence

Configuration plant adapted

T1	Z1_DIFF_TRIP
T2	Z2_DIFF_TRIP
T3	Z3_DIFF_TRIP
T4	Z1_DIFF_TRIP
T5	Z2_DIFF_TRIP
T6	Z3_DIFF_TRIP
S1	BUS1_V_TRIP
S2	BUS2_V_TRIP
S3	50BF_TRIP
	Auxiliary supply EL
	Protective earth
	Normal
	Fail

Based on	Prepared 2013-01-24 Agneta Rydh	Title Connection Diagram REB650 (HiZ/3Ph) A03A ANSI symbols	Doc.des. / Doc.kind / Ref.des.
	Approved 2013-01-29 Patrik Nyback		Resp.dept. PSTP/TPLA / Rev.ind. / Lang. en
Rev / Rev. Note / Date / Name	Project	ABB AB	Doc.No. 1MRK006502-MD / Sheet 5 / Cont. 6

We reserve all rights in this document and in the information contained therein. Reproduction, use or disclosure to third parties without express authority is strictly forbidden. Copr. ABB AB

Power supply module PSM03 110–250 VDC, 100–240 VAC

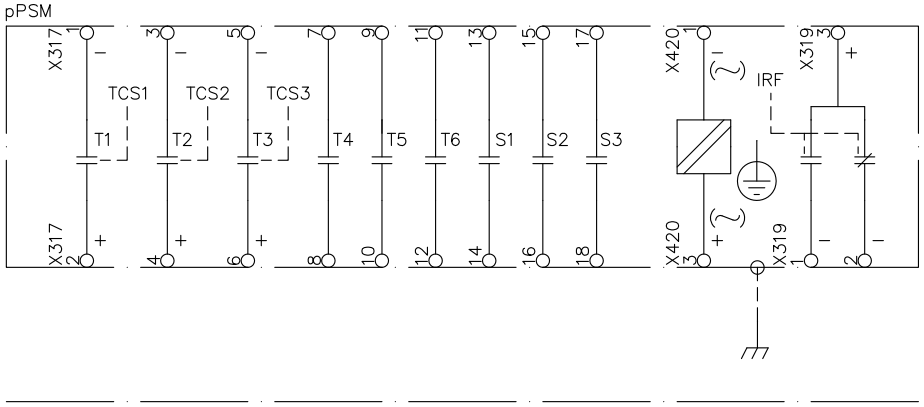

Observe polarity sequence

Configuration plant adapted

T1	Z1_DIFF_TRIP
T2	Z2_DIFF_TRIP
T3	Z3_DIFF_TRIP
T4	Z1_DIFF_TRIP
T5	Z2_DIFF_TRIP
T6	Z3_DIFF_TRIP
S1	BUS1_V_TRIP
S2	BUS2_V_TRIP
S3	50BF_TRIP
	Auxiliary supply EL
	Protective earth
	Normal
	Fail

Based on	Prepared 2013-01-24 Agneta Rydh	Title Connection Diagram REB650 (HiZ/3Ph) A03A ANSI symbols	Doc.des. Doc.kind / Ref.des.
	Approved 2013-01-29 Patrik Nyback		Resp.dept. PSTP/TPLA / Rev.ind. / Lang. en
Rev / Rev. Note / Date / Name	Project	ABB AB	Doc.No. 1MRK006502-MD / Sheet 6 / Cont. 7

We reserve all rights in this document and in the information contained therein. Reproduction, use or disclosure to third parties without express authority is strictly forbidden. Copr. ABB AB

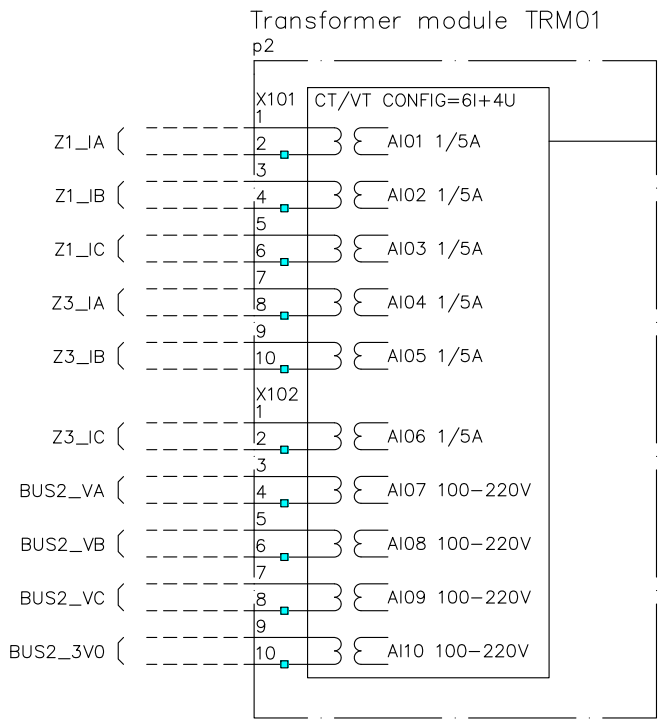

■ Indicates polarity mark. Note that internal polarity can be adjusted by setting of analog input CT neutral direction and or on SMAI pre–processing function blocks.

Based on	Prepared 2013–01–24 Agneta Rydh	Title Connection Diagram REB650 (HiZ/3Ph) A03A ANSI symbols	Doc.des. Doc.kind Ref.des.
	Approved 2013–01–29 Patrik Nyback		Resp.dept. PSTP/TPLA Rev.ind. Lang. en
Rev Rev. Note Date Name	Project	ABB AB	Doc.No. 1MRK006502–MD Sheet 7 Cont. 8

We reserve all rights in this document and in the information contained therein. Reproduction, use or disclosure to third parties without express authority is strictly forbidden. Copr. ABB AB

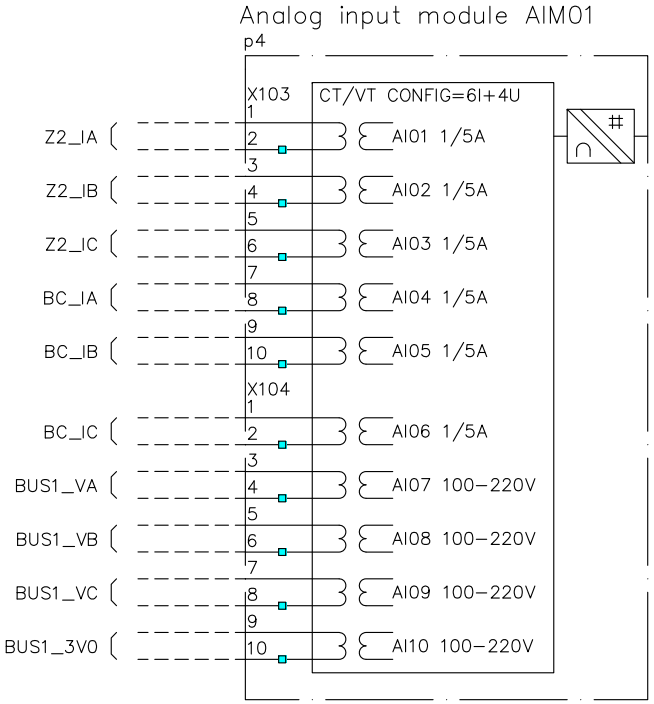

■ Indicates polarity mark. Note that internal polarity can be adjusted by setting of analog input CT neutral direction and or on SMAI pre–processing function blocks.

Based on	Prepared 2013–01–24 Agneta Rydh	Title Connection Diagram REB650 (HiZ/3Ph) A03A ANSI symbols	Doc.des. Doc.kind
	Approved 2013–01–29 Patrik Nyback		Ref.des.
	Project		Resp.dept. PSTP/TPLA Rev.ind.
Rev Rev. Note Date Name		ABB AB	Doc.No. 1MRK006502–MD Lang. en Sheet 8 Cont. 9

We reserve all rights in this document and in the information contained therein. Reproduction, use or disclosure to third parties without express authority is strictly forbidden. Copr. ABB AB

Binary input/output module BIO01

p5

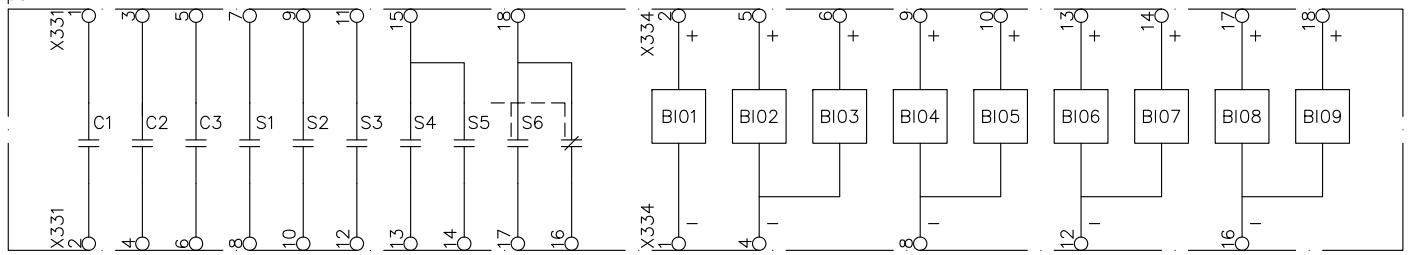

Observe polarity sequence

Configuration plant adapted

C1	CUR_PROT_TRIP
C2	BUS1_V_TRIP
C3	BUS2_V_TRIP
S1	Z1_DIFF_TRIP
S2	Z2_DIFF_TRIP
S3	Z3_DIFF_TRIP
S4	CUR_PROT_TRIP
S5	ALARM_BAT+TCS
S6	50BF_TRIP
BI01	BC_52a
BI02	EXT_50BFI
BI03	SPARE
BI04	MCB_TRIP_BB1
BI05	MCB_TRIP_BB2
BI06	EXT_DRF_START
BI07	SPARE
BI08	CHANGE_LOCK
BI09	SPARE

Based on	Prepared 2013-01-24	Agneta Rydh	Title Connection Diagram REB650 (HiZ/3Ph) A03A ANSI symbols
	Approved 2013-01-29	Patrik Nyback	
	Project		

Rev	Rev. Note	Date	Name

ABB AB

Doc.des.	Doc.kind
Ref.des.	
Resp.dept.	PSTP/TPLA
Rev.ind.	
Lang.	en
Doc.No.	1MRK006502-MD
Sheet	9
Cont.	–