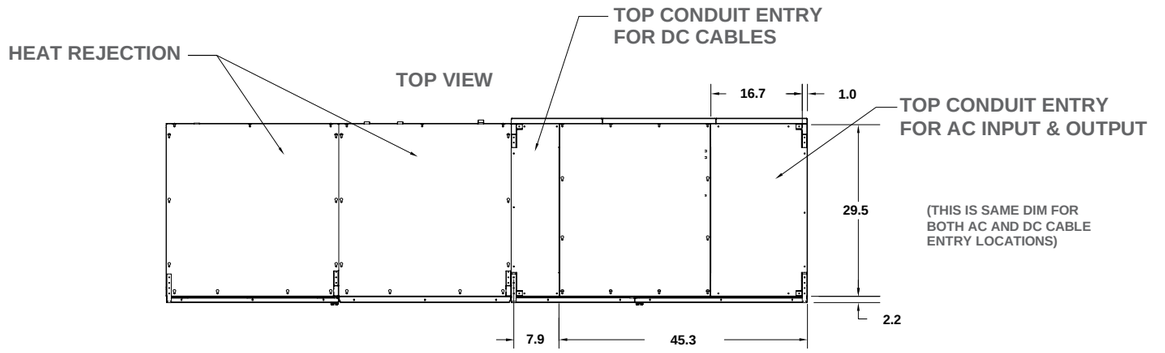

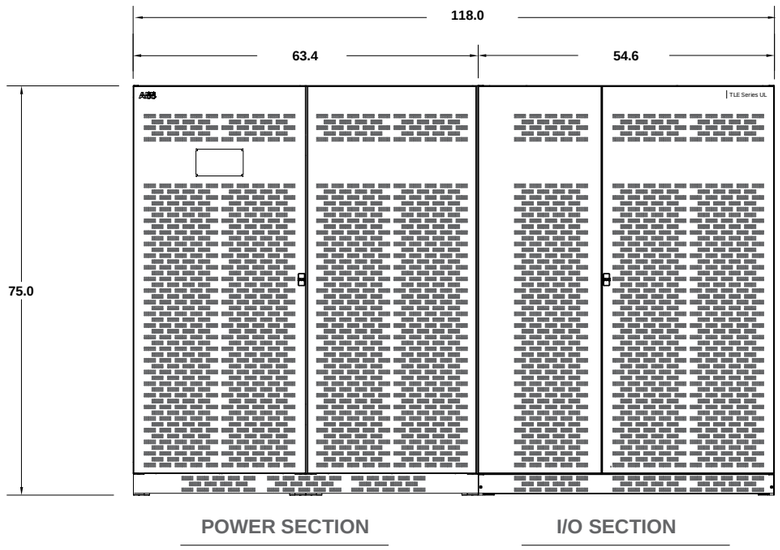

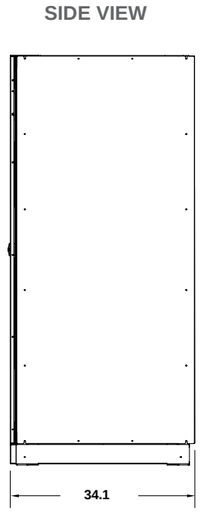

HEAT REJECTION IN DOUBLE CONVERSION OPERATING MODE AT 1.0pF LOAD, NOMINAL VOLTAGE / FREQUENCY, ENERGY STORAGE DISCONNECTED.		100% LOAD	WEIGHT: lbs	FLOOR LOAD lbs/sq ft
750 kW	BTU/hr	94260	4850	174
	kW	18.0		
HEAT REJECTION IN eBOOST OPERATING MODE @ 1.0 pF LOAD, NOMINAL VOLTAGE / FREQUENCY, ENERGY STORAGE DISCONNECTED.		**100% LOAD**	**WEIGHT: lbs (kg)**	**FLOOR LOAD lbs/sq ft (kg/sq m)**
750 kW	BTU/hr	30288	4850	174
	kW	8.9		
	TLE Power Section		2976	174 (848)
	TLE In/Out Section		1874	

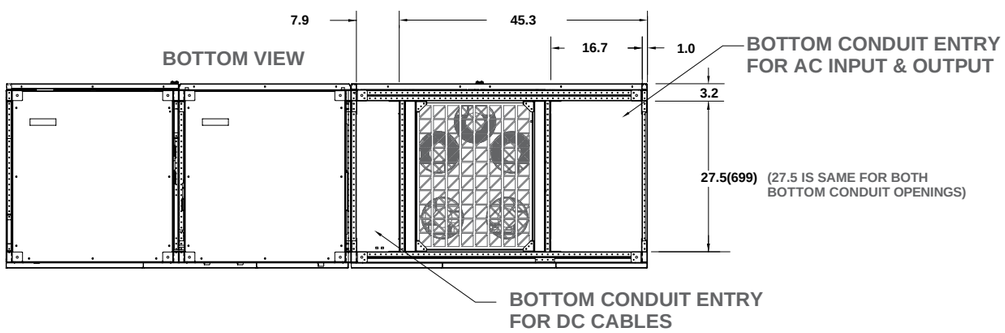

1. Dimensions are in inch;
2. UPS Operating Temperature 32° F–104°F
3. 18" minimum clearance required above the unit for heat rejection
4. Front access for service and maintenance
5. Do not tilt the UPS more than 10°

			Draw	Barbarani R.	08.03.21
			Checked	Balbiano C.	08.03.21
ECN		Name	Revision	1	3.12.14

ABB Electrification Products Industrial Solution

Power Protection
6572–Quartino, Switzerland

Mechanical Outline

TLE 625 kW UL
–

Product Upgrade Letter: A

Series: 2 | 0001050349 | Page 1 of 2

ABB Proprietary and Confidential. All rights for transmission, duplicating or reprinting reserved

FRONT VIEW WITH SAFETY PANEL REMOVED

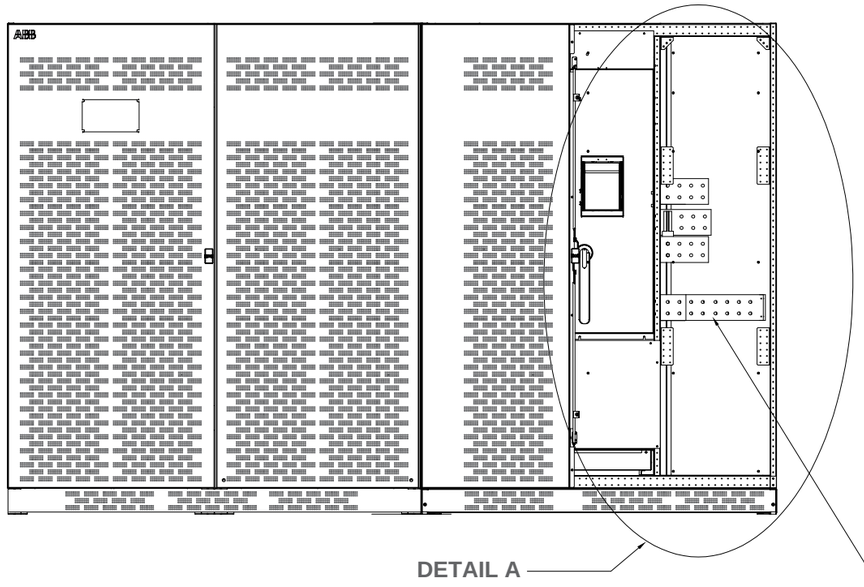

SIDE VIEW WITH SAFETY PANEL REMOVED

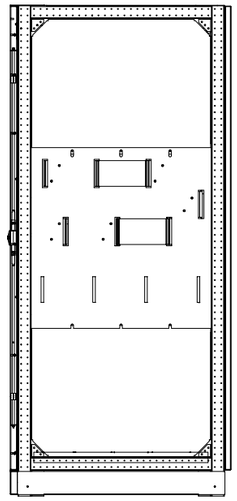

BUS BAR EXTENSIONS ARE MOUNTED ON BOTTOM BARS IN CASE OF TOP CABLE ENTRY & ON TOP BARS IN CASE OF BOTTOM CABLE ENTRY

Maximum Allowed Cable Configuration

kW	Rectifier Input	Bypass Input	DC Input	Output (Load)	GND
625	5 x 500 Kcmil	4 x 500 Kcmil	6 x 500 Kcmil	4 x 500 Kcmil	1 x 4/0 AWG

* Actual cable size and quantity must be based on the requirements of NFPA 70 and must not exceed the limits listed above.

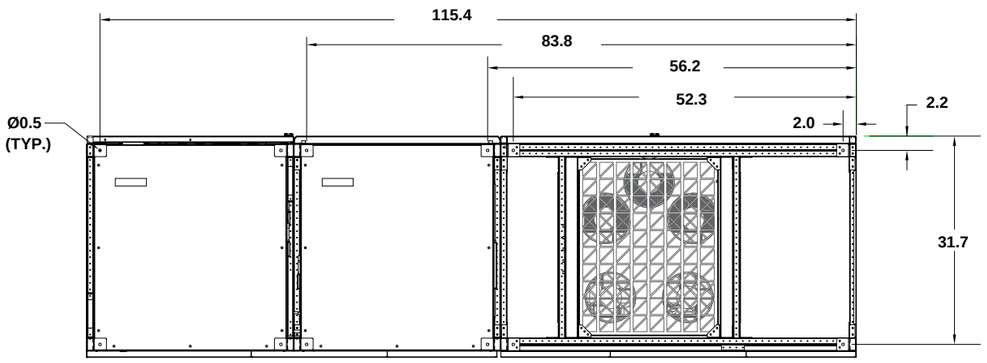

ANCHOR LOCATION DETAILS
(BOTTOM VIEW)

DETAIL A

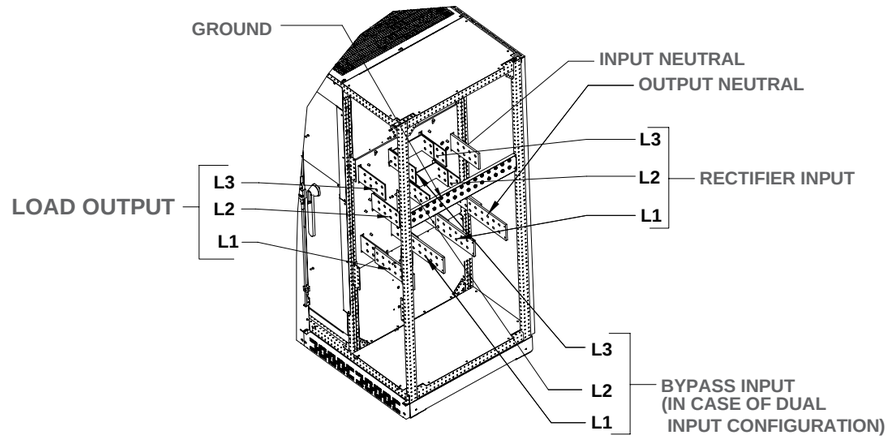

			Draw	Barbarani R.	25.03.20
			Checked	Balbiano C.	25.03.20
ECN		Name	Revision	1	25.03.20

ABB Electrification Products Industrial Solution

Power Protection
6572-Quartino, Switzerland

Mechanical Outline

TLE 625 kW UL
—

Product Upgrade Letter: A

Series: 2 | 0001050349 | Page 2 of 2

ABB Proprietary and Confidential. All rights for transmission, duplicating or reprinting reserved