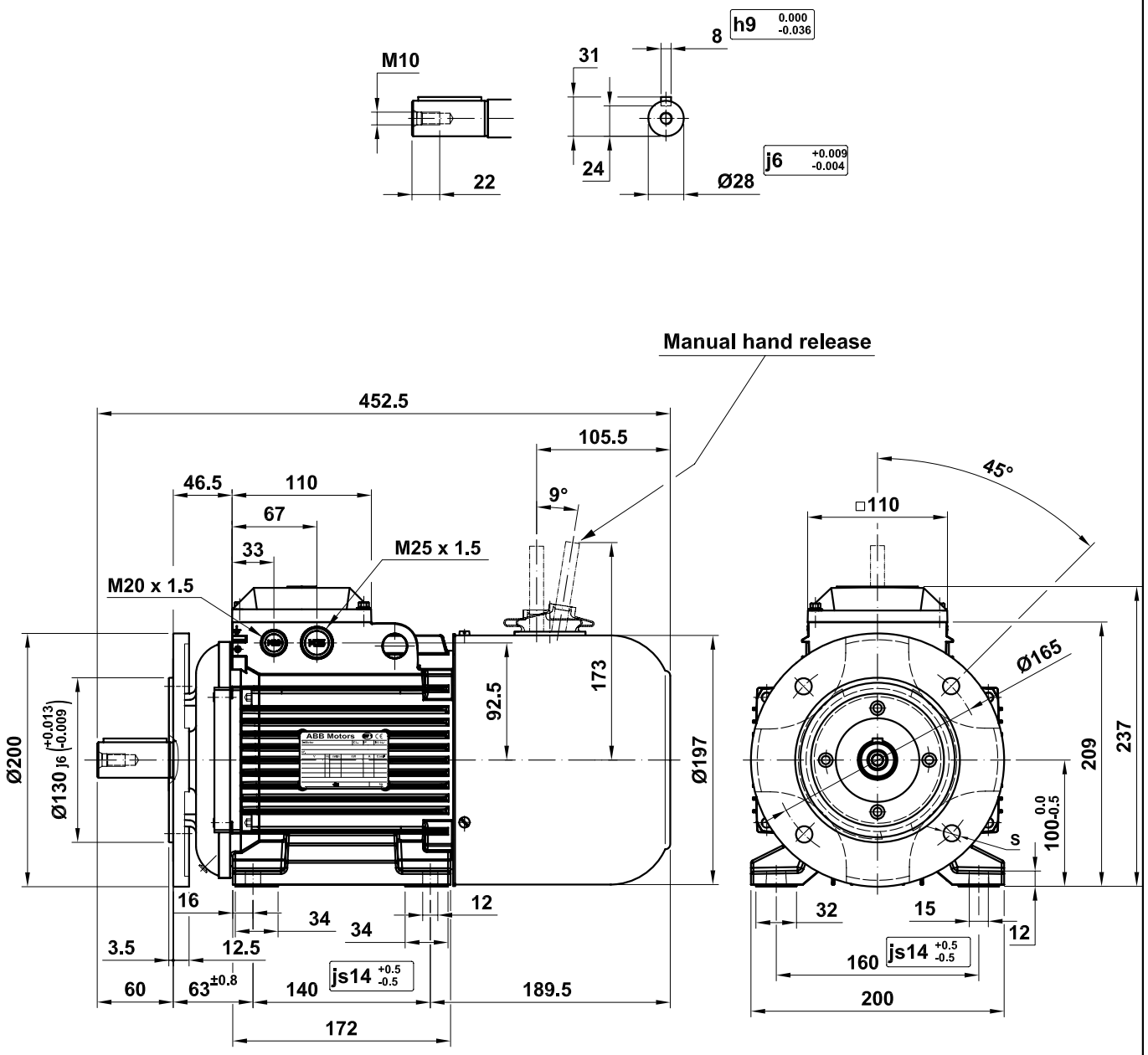

S = { Ø13 – Special IM 2001 / M10 – Special IM 2101 }

M3ARF/S 100

(*) Except 100 LD

Motor Dimension Print	Motor Type : M3ARF/S 100 L IM-B34 FF(T)-165 (*)	Document Nº : A1.4934 / 3D: A2.4368
Description : Brake motor foot and flange mounted special (2-pieces) IM2001 or IM2101		
Unit : Discrete Automation&Motion-Fáb. Motores Date : 2010-10-05	Issued by : EMD/ G.Gállego Approved by : EMD/ G.Blanes	Replaces : To date 2008-05-13 Replaced by :
Asea Brown Boveri, S.A.	Customer Reference :	ABB