UG03–6011E
User's Guide
May 1986
Replaces:
RK 646–100E
RK 646–300E
Data subject to change without notice

ABB Relays

# Type RADHA
# High-impedance three-phase differential relay

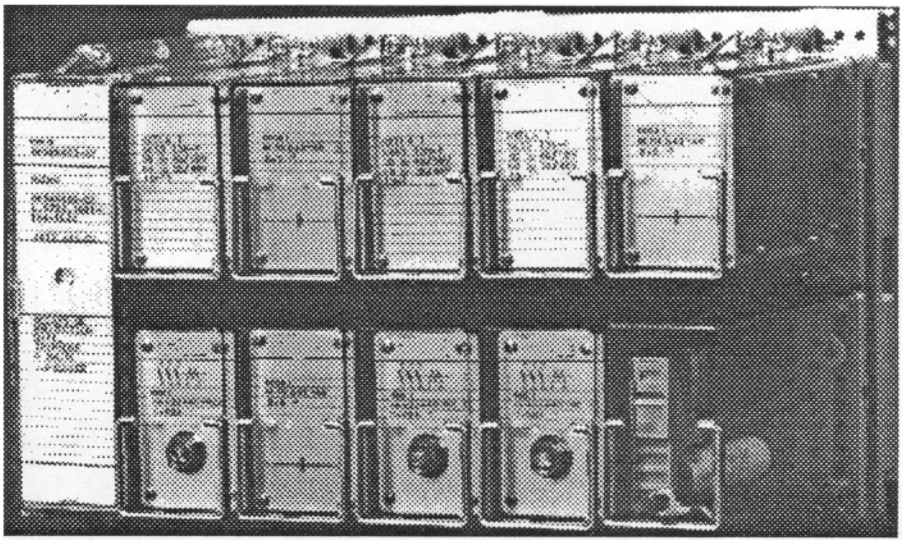

(78 27 94)

## General

- High-impedance differential protection for reactors, generators, motors, bus bars and auto-transformers without compensating winding
- Secure operation, not affected by CT saturation
- High-speed operation, 10–20 ms to trip
- Fixed or settable operate value, 10–400 V
- Minimum primary operate value 1–20% of main CT rating
- Tripping and target relay included

The RADHA relay is a high-speed, sensitive high-impedance three-phase differential relay for phase and ground fault protection of bus bars, auto-transformers without compensating winding, reactors, generators and motors. The high sensitivity of RADHA generally precludes the need for a separate ground fault relay in a solidly grounded system. Applications are not limited by CT saturation for external or internal faults. The saturation voltage of the involved CT's must be at least twice the selected operate value of the RADHA relay and all CT's must have identical turns ratios.

Non-linear resistors are used at the CT summation point in each phase for limitation of high peak voltages during internal faults.

Contents



Figures



## DEFINITIONS

CT = Current transformer

$R_{CT}$ = Resistance in the secondary winding of the CT

$L_{MA}$ = Magnetizing inductance (tends to zero when the CT saturates)

$W_{CT}$ = Secondary winding to be regarded as a true current source i.e. with infinite internal impedance even when the CT is fully saturated

$I_k$ = Maximum secondary through-fault current (r.m.s. value). For RADHA as generator protection $I_k$ is calculated from the subtransient reactance of the generator

$R_L$ = Highest value of the pilot-wire loop-resistance up to the differential relay

$I_p$ = Primary operate current = $n_1 \times (I_r+I_m+I_{res})$ where

- $n_1$ = CT ratio
- $I_r$ = Relay operate current
- $I_m$ = The sum of the magnetizing currents of the CTs at the operate value $U_s$
- $I_{res}$ = Current through the non-linear resistors at the operate value $U_s$

U = Maximum voltage (r.m.s. value) across the differential circuit at external fault

$U_s$ = Set value

## APPLICATION

In conventional current balanced schemes of low-impedance differential type, considerable spill currents can occur during through faults, due to saturation of the current transformers. The saturation is primarily caused by the dc transients of the fault current the occur even if the current transformers have overcurrent saturation factors which well exceed the maximum symmetrical value of the fault current. In order to avoid incorrect tripping during such conditions, current stabilization and a delay of the tripping have been utilized.

The RADHA relay is of the high-impedance restraint type (with a relatively high series impedance in the differential circuit) and has been designed with filter circuits which will attenuate the dc component. Tests and practical experience show that RADHA with recommended setting does not operate undue for external short-circuits, even for the most extreme transient CT saturation.

## Measuring principle

The principle operation of the differential relay is shown in fig. 1. During normal load conditions, the emf's ($E_1$, $E_2$) induced in the current transformers are opposed and equal. Thus the voltage across the relay will be zero provided that the circuits are symmetrical, Fig. 3a. In the event of saturation of the current transformers during an external fault a voltage will form across the relay. This differential voltage will reach its maximum when one of the current transformers $CT_2$ is completely saturated and the other current transformer $CT_1$ is entirely unaffected by saturation, fig. 3b. The magnetizing impedance of the saturated current transformer becomes zero, which may be regarded as a short-circuiting of the inductance $L_{MA2}$ in the simplified diagram. Fig. 2.

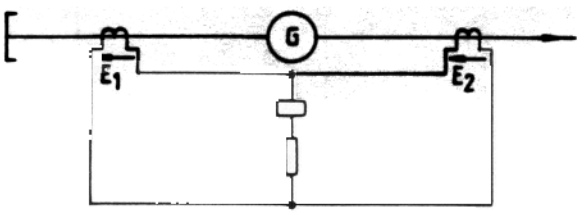


Fig. 1 Basic circuit of differential relay type RADHA

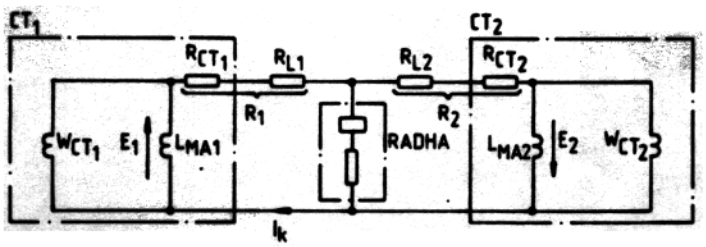


Fig. 2 Simplified diagram for the current transformers and RADHA

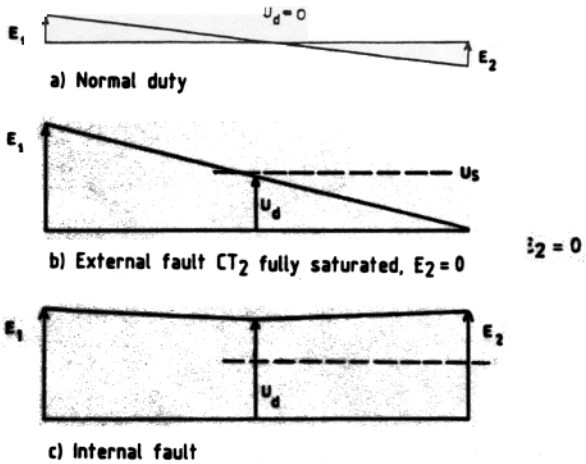


Fig. 3 Voltage diagram for the emf's $E_1$ and $E_2$ in the current transformers and the differential voltage $U_d$ across RADHA. $U_s$ = operate voltage.

As the impedance of the relay circuit is much larger than the combined resistance $R_2$ of the secondary circuit, the current $I_k$ will be forced through the secondary winding of the saturated current transformer. It follows that the maximum voltage $U_d$ which can occur across the relay circuit during an external fault will be equal to the voltage drop $I_k \times R_2$, Fig. 3 b.

However, it never happens that one current transformer is completely saturated while the other one is not saturated. As the weaker current transformer begins to saturate the voltage developed across the relay circuit will transfer the burden from the weaker to the stronger current transformer. Tests and experience indicate that the differential voltage $U_d$ is not likely to exceed one half of the product $I_k \times R_2$.

Thus the relay will remain stable even in the most extreme cases of transient saturation of the current transformers provided that the operating voltage $U_s$ of the relay is selected equal to or higher than $I_k \times R_2$. In this case calculate with the largest value of $R_{CT}$ and $R_L$ for any of the current transformers and the wires.

In the event of an internal fault both current transformers will force current through the differential relay circuit. The voltage $U_d$ will then become high and cause the relay to operate and pick up, Fig. 3c.

Weaker current transformer begins to saturate the voltage developed across the relay circuit will transfer the burden from the weaker to the stornger current transformer. Tests and experience indicate that the differential voltage $U_d$ is not likely to exceed one half of the product $I_k \times R_2$.

Thus the relay will remain stable even in the most extreme cases of transient saturation of the current transformers provided that the operating voltage $U_s$ of the relay is selected equal to or higher than $I_k \times R_2$. In this case calculate with the largest value of $R_{CT}$ and $R_L$ for any of the current transformers and the pilot wires.

In the event of an internal fault both current transformers will force current through the differential relay circuit. The voltage $U_d$ will then become high and cause the relay to operate and pick up, Fig. 3c.

## DESIGN

The RADHA relay is available in 6 versions, 4 of these versions each with 2 reconnectible operate values $U_{s1}$ and $U_{s2}$, and 2 versions with continuously settable pick-up value between 100 and 400 V. The basic version includes RTXP 18 test switch, RXTLA 1 rectifier units, RXTCA 1 capacitor and resistor units and RXID 1 overcurrent relays (pick-up value 20 mA approx.) Target relay type RXSF 1 is included in two versions.

In versions with the operate value between 100 V and 400 V also a set of resistors RK 795 101-DC is included. The resistor set consists of 3 non-linear resistors 5248 831-D and 3 adjustable resistors mounted on an 19" apparatus plate.

Versions of RADHA

With target indication

| Operate value $U_{s1}/U_{s2}$ | Modular size C and S | Weight kg | Circuit-diagram 7417 ... |
|---|---|---|---|
| 10/15 V | 48C 4S | 6,5 | 015-FA |
| 19-100 V [2] | 36C 4S | 5,2 | 015-CA |
| 100-400 V adjustable | 36C 4S | 8,2 | 013-CA [1] |

without target indication

| Operate value $U_{s1}/U_{s2}$ | Modular size C and S | Weight kg | Circuit-diagram 7417 ... |
|---|---|---|---|
| 10/15 V | 42C 4S | 6,0 | 015-DA |
| 19-100 V [2] | 36C 4S | 5,1 | 015-AA |
| 100-400 V adjustable | 36C 4S | 8,1 | 013-AC [1] |

[1] Non-linear resistors and adjustable resistors mounted on a 6S 60C (266x482 mm) apparatus plate are included.
[2] See Technical data

In all versions the RXID 1 relay is used and the operate value is set on the adjustable resistors. The RXID 1 is an instantaneous electromechanical overcurrent relay containing three normally open contacts. The contacts 15-25 in the relays of the three phases are connected in parallel to terminal 17 of the test switch. The contacts 26-27 are connected in parallel to the target relay type RXSF 1. RXID 1 has fixed pick-up values. The relay current-measuring circuit is fed through the short-circuiting connector type RTXK so that the current transformer secondary circuit is automatically short-circuited when the relay is removed from the terminal base.

The rectifier units RXTLA 1 consist of silicone rectifier bridges. The silicone diodes of the bridges are protected against overvoltage by non-linear resistors connected in parallel with the output on the rectifier bridges. A resistor and a capacitor constitute the series impedance for each phase. The resistors are housed in the RXTLA 1 unit and the capacitors are housed in the RXTCA 1 unit. Normally RADHA contains 3 RXTLA 1 units and 3 RXTCA 1 units. Versions with operate value $U_{s1}/U_{s2}$ = 10/15 V has 6 RXTLA 1 units.

The target relay type RXSF 1 has the contact 13-14 connected to terminal 16 on the Test switch and the contact 15-16 to terminal 2. The contact 17-18 is free and can be used for any suitable purpose.

The non-linear resistors which are connected in parallel with RADHA limit the high peak voltages which can arise at short circuits within the protective zone.

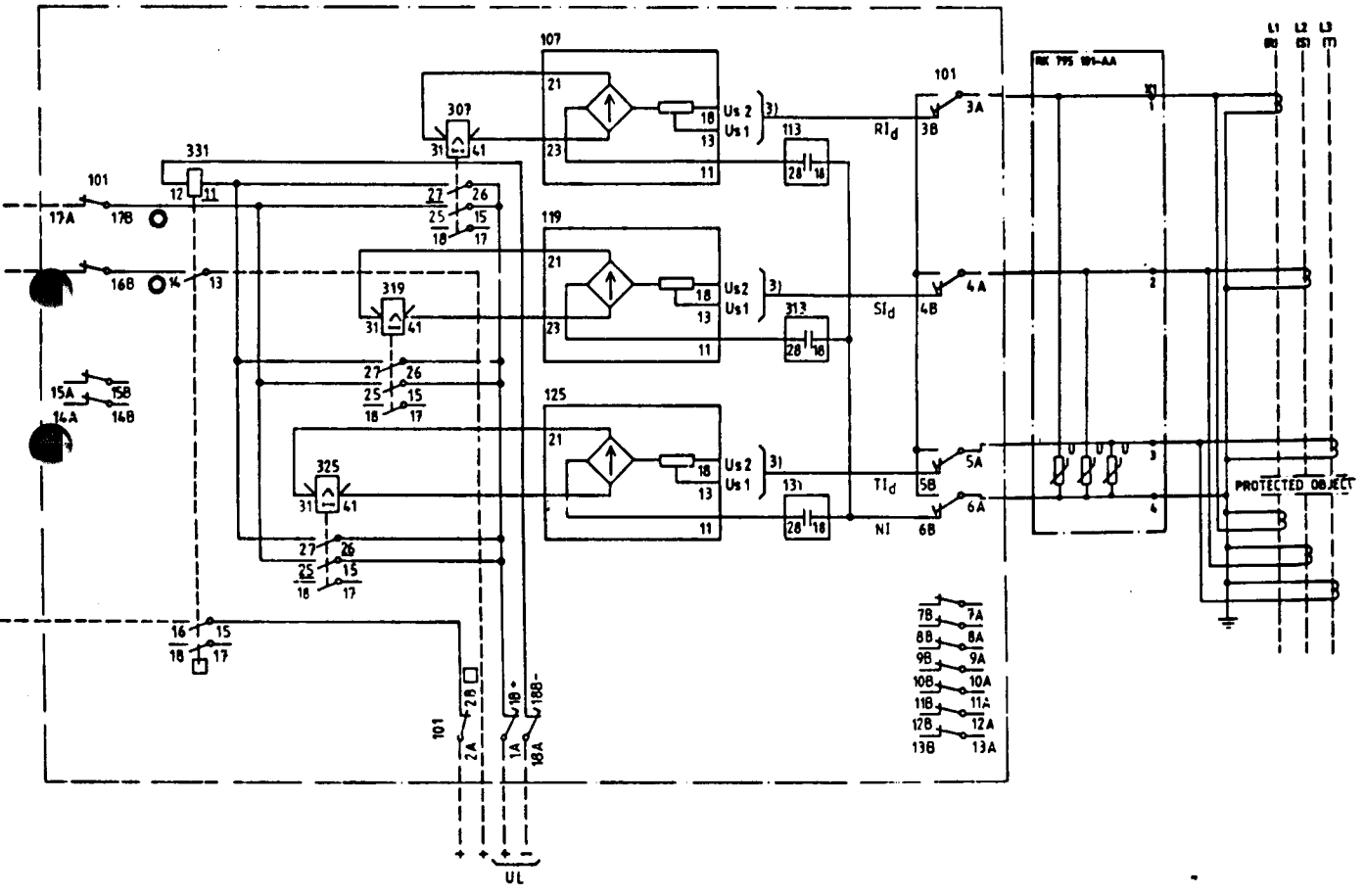


Fig. 4 Internal and external connections for type RADHA with fixed pick-up value, variant RK 646 009-CA.

## TECHNICAL DATA

### General

RADHA with fixed pick-up

| 50 Hz | | 60 Hz | | Max. continous voltage | | Current $I_r$ in the relay circuit at operation |
|---|---|---|---|---|---|---|
| $U_{s1}$ | $U_{s2}$ | $U_{s1}$ | $U_{s2}$ | $U_{s1}$ | $U_{s2}$ | approx. |
| 10 V | 15 V | 10 V | 15 V | 34 V | 60 V | 20 mA |
| 20 V | 30 V | 19 V | 29 V | 74 V | 82 V | 20 mA |
| 40 V | 50 V | 38 V | 48 V | 99 V | 106 V | 20 mA |
| 70 V | 100 V | 67 V | 97 V | 125 V | 145 V | 20 mA |

RADHA with settable operate value Us

| | | |
|---|---|---|
| 100-400 V | 125 % of $U_s$ | 70 mA |

| | | | |
|---|---|---|---|
| Rated frequency | 50 or 60 Hz | | |
| Pick-up time | 10-20 ms | | |
| Aux. voltage dc | 20, 48-55, 110-125, 220-250 V | | $U_L$ (-20 % to +10 %) |
| Power consumption dc | 1,6 W at pick-up | | |
| Permitted ambient temperature | -25 to +55°C | | |

| | |
|---|---|
| Insulation Tests | |
| Dielectric test | |
| current circuits | 50 Hz, 2.5 kV, 1 min |
| remaining circuits | 50 Hz, 2.0 kV, 1 min |
| Impulse voltage test | 5.0 kV, 1.2/50 µs, 0.5 J |
| Disturbance Tests | |
| Power frequency test | 50 Hz, 0.5 kV, 2 min |
| Fast transient test | 4-8 kV, 2 min |
| 1 MHz burst test | 2,5 kV, 2 s |

**RXSF 1**

| | | | |
|---|---|---|---|
| Number of built-in relays | 1 | | |
| Number of targets | 1 | | |
| Type of reset | hand | | |
| | n.o. contact | n.c. contact | |
| Pick-up time | 30 ms | 20 ms | |
| Drop-out time | 5 ms | 10 ms | |
| Max. system voltage | 300/250 V | | dc/ac |
| Contacts | | | |
| Number of contacts | 3 twin contacts | | |
| | 1 contact | 2 contacts in parallel | |
| Current carrying capacity for closed contact | 90 A | - | 200 ms |
| | 50 A | - | 1 s |
| | 5 A | - | cont. |
| Making and conducting capacity, L/R > 10 ms | 30 A | - | 200 ms |
| | 10 A | 15 A | 1 s |
| Breaking capacity, ac P.F > 0.1, max 250 V | 10 A | - | |
| | 1 contact | 2 contacts in series | at $U_n$ |
| dc, L/R < 40 ms | 4,0/1,5 A | 6,0/4,0 A | 24/48 V |
| | 1,0/0,4 A | 2,5/1,0 A | 55/110 V |
| | 0,3/0,2/0,15 A | 0,7/0,4/0,3 A | 125/220/250 V |

**RXID 1**

| | | | |
|---|---|---|---|
| Max system voltage | 450/400 V | | dc/ac |
| | Single contacts | Twin contacts | |
| Number of contacts | 1 no | 2 nc | |
| Current carrying capacity for closed contact | 90 A<br>50 A<br>10 A | 90 A<br>50 A<br>5 A | 200 ms<br>1 s<br>cont. |
| Making and conducting capacity, L/R > 10 ms | 30 A<br>20 A | 30 A<br>10 A | 200 ms<br>1 s |
| Breaking capacity ac, P.F > 0.1, max 250 V | 30 A | 10 A | |
| | | | at $U_n$ |
| dc, L/R < 40 ms | 4,0/1,5 A<br>1,0/0,4 A<br>0,3/0,2/0,15 A | 4,0/1,5 A<br>1,0/0,4 A<br>0,3/0,2/0,15 A | 24/48 V<br>55/110 V<br>125/220/250 V |

Non-linear resistors

| Operate value $U_s$ | Resistor | Characteristic curve |
|---|---|---|
| 10-50 V | 5248 831-B | c |
| 50-100 V | 5248 831-C | b |
| 100-130 V | 5248 831-D | b (0.5 x total resistance) |
| 130-400 V | 5248 831-D | a (Total resistance) |

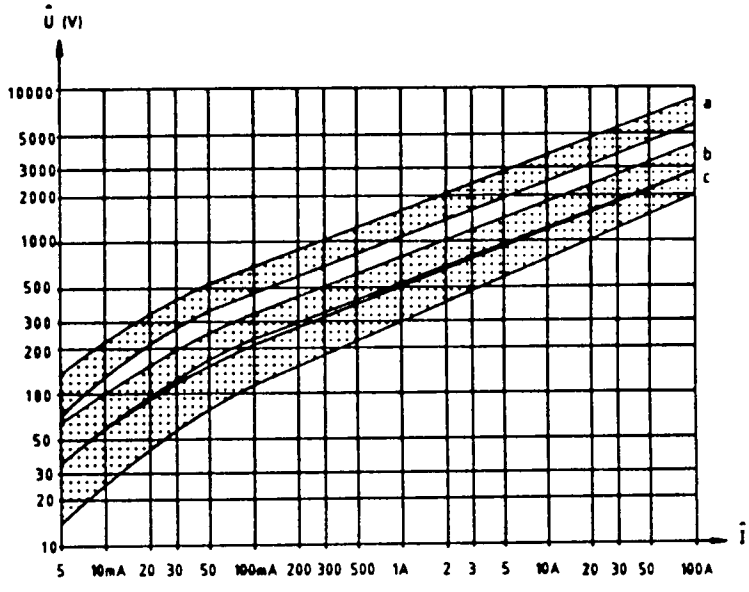


Fig. 5 Characteristic current-voltage curves for the non-linear resistors

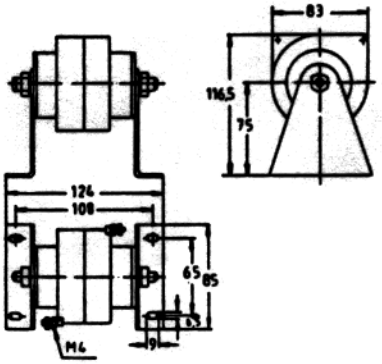


Fig. 6 Dimensions of Non-linear resistor 5248 831-B or C.

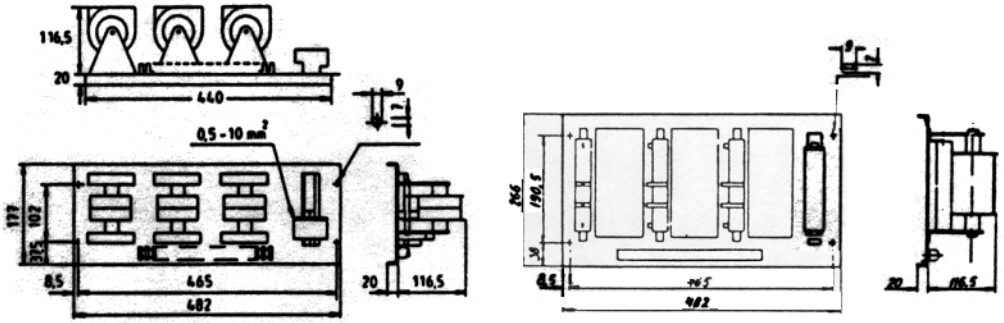


a) Resistor set RK 795 101-AA or-AB b) Resistor set RK 795 101-DC (5248 831-D)

Fig. 7 Dimensions of the resistor sets.

**SETTING**

When the machine is solidly grounded the lowest setting $U_s$ is determined by the correlation:

$$U_s > I_k (R_{CT} + R_L)$$

If the neutral point of the machine is isolated or grounded with a high-ohmic resistor, the current will be limited at a ground fault. The largest fault current will then appear at short-circuits, why the operate voltage of RADHA can be compared with the value according the formulae:

$$U_s > I_k (R_{CT} + 0.5\ R_L)$$

In this case calculate with the highest value of $R_{CT}$ and $R_L$ for the current transformers and the pilot wires.
If the calculated voltage U becomes higher than $U_s$, please contact your nearest ASEA Relays representative for further information.

**Sensitivity**

The primary operate current $I_p$ per phase is determined by:

$$I_p = n_1 \times (I_r + I_m + I_{res})$$

As the relay current is capacitive this will compensate for some of the magnetizing current and consequently decreases the primary operate current. Thus the magnetizing current and the current in the non-linear resistor are normally the determining factors for the sensitivity at an operate voltage > 100 V. In most cases the operate current is approx. 1-20 % of the rated current of the current transformer.

## CURRENT TRANSFORMERS

The CT's neither need to have identical exitation characteristic nor be matched to each other. Note that all CT's to the same protection should have identical turns ratios. Consequently auxiliary current transformers cannot normally be employed. CT's of standard design may be used, provided they do not have turns corrections, or if the turns corrections in percent are equal for all CT's. The secondary winding of the CT's should have low resistance and the leakage inductance should be negligible compared with the resistance. The secondary saturation emf of the current transformers should be at least twice the operate voltage $U_s$ of the relay in order to ensure fast operation for internal faults.

## ACCEPTANCE AND STORAGE

When received, ensure that no visual damage has occurred to RADHA. Ensure that all screws and units are securely tightened. Check that the relay has the correct data. If the RADHA is not to be installed immediately, it should be stored in a clean and dry place, preferably in its packing.

## INSTALLATION AND CONNECTION

On delivery, the internal connections are already made and therefore only the external connections, according to applicable circuit diagram, remain to be made at installation.
In order to keep the pilot wire resistance $R_L$ as low as possible the interconnections of the current transformers should preferably be made directly close to the current transformers and only the pilots to the differential circuit should be run to the relay board. The non-linear resistors should be mounted at the point of interconnection and the relay differential circuit shall be connected to the electrical midpoint of the measuring circuit.

## TESTS AND COMMISSIONING

**Test equipment**

Ohmmeter, bridge type
Single-phase secondary test set e.g. type SVERKER
Multipurpose instrument with mA-A range class 1.5
Test plug handle type RTXH 18
Trip block plug type RTXB
Ammeter test plug type RTXM
High tension current primary test set with connection wires
Clip-on ammeter 0-250 A (class 2.5)

## Calculation and setting of pick-up value

The pick-up value should not exceed 50 % of the saturation voltage of the current transformers. To ensure stability of RADHA when large short circuit currents flow through the protected object at faults outside the protective zone, the pick-up voltage of RADHA, at low ohmic or solidly grounded network, should be higher than:

$$= I_k (R_{CT} + R_L)$$

Versions with fixed operate value $U_{s1}$ are obtained with the terminals 13 of the RXTLA 1 units connected to the test switch. To obtain the higher operate value $U_{s2}$ the connections (terminals 13) on the RXTLA 1 units are to be reconnected to terminals 18 of the RXTLA 1 units.

Versions with continuously adjustable operate values are set on the adjustable resistors. For operate values $U_s > 130$ V also the jumpers X1:11-12, X1:13-14 and X1:15-16 are to be removed, see circuit diagrams.

RADHA normally is delivered with the pick-up value marked on the test switch or the RXTLA 1 units.

## General inspection

Make sure that the operate voltage of RADHA is correct. Check and make sure that the ratings of the CT's (rated current, current ratio and knee-point voltage) are correct and that they are not visibly damaged. Also check that the stated current ratio is equal for all the CT's.

## Check the connections

Make sure that all connections outside the relay cubicle have been checked with regard to insulation between phases and between ground and phases.
Check that the CT's and the terminals of RADHA are connected according to the circuit diagrams. Note that the secondary circuits of the CT's may be grounded only in one point.
Check that the secondary circuits of the CT's are without interruption.

## Check the resistances in CT circuits

Disconnect the protected object from the network.

Open the CT circuits in the junction box between the CT groups, see Fig. 8.

Measure from the junctions the resistance in each circuit. The resistances $R_{CT}$ and $R_L$ which are obtained from these measurements are used for calculation of the operate voltage of RADHA. The highest of the values for low-ohmic or solidly grounded networks ($R_{CT} + R_L$) and for generator with isolated or high-ohmic grounded neutral point ($R_{CT} + 0.5\ R_L$) should not be higher than the values arrived at when the relay protection pick-up value was determined.

Restore the CT circuit connections.

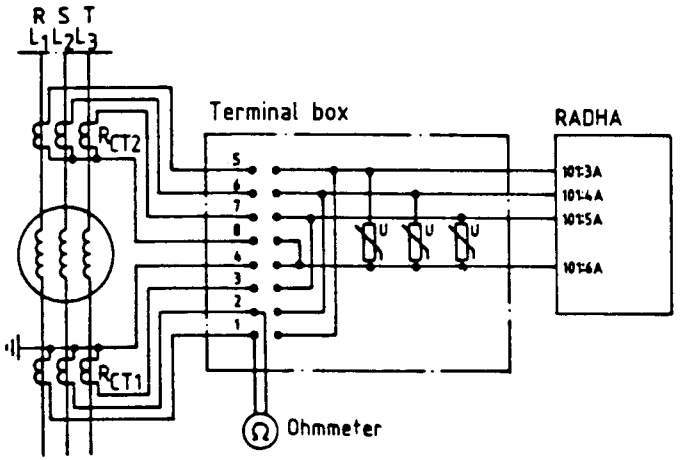


Fig. 8 Connection diagram for the measurement of the resistance in the current transformer circuits.

## Check the operate value, secondary test

Insert the test handle in the test switch. Connect the relay testing set to terminal 3 L1 phase (R) and 6 (neutral) of the test handle. Increase the voltage until the relay in the R-phase picks up and measure the voltage at pick-up.

Repeat the measurement with the relay testing set connected to terminals 4-6 L2 phase (S) and 5-6 L3 phase (T)

Check that the measured pick-up values are in accordance with the two values $U_{s1}$ and $U_{s2}$ which are denoted on the RXTLA 1 units, (Tolerance: $\pm$ 10 %). The lower operate value $U_{s1}$ is valid with the connection to terminals 13 and the higher operate value $U_{s2}$ is valid with the connection to terminals 18 on the RXTLA 1 units.

Check the versions with adjustable operate value 100-400 V and make sure that the measured operate voltage corresponds to the markings on the test switch.

Pull out the test handle.

### Check the operate value, primary test

The test is carried out without current being supplied through the primary windings of the CT's.

Insert the trip block plug RTXB into the terminals 16 and 17 of the test switch.

Connect the relay testing set with an amperemeter in series to the connection blocks for one phase and the neutral in the junction box. The connection blocks must not be opened as the CT's are to be supplied with excitation current.

Supply current via an isolating transformer and measure the current which is required for the operation of RADHA.

Repeat the test in the remaining phases.

The value of primary current is obtained by multiplying the measured current with the ratio of the CT.

## TEST OF RADHA AS GENERATOR PROTECTION

### Polarity and current ratio checks

Connect the test set according to fig. 9a if the neutral point of the generator can be grounded and according to fig. 9b if the neutral point not can be grounded.

Supply current from the test set. The current should be approximately 1 % of the rated current of the generator. If the test set is connected as shown in fig. 9a, measure the voltage across the terminals of the test switch for each phase:
phase L1 (R), terminal 3 and 6
phase L2 (S), terminal 4 and 6
phase L3 (T), terminal 5 and 6

The measured voltage across RADHA should be negligible compared with the operate value. A voltage higher than 10 % of the operate value indicates incorrect polarity of a current transformer and the connection should be reversed.

Remove the connections and grounding.

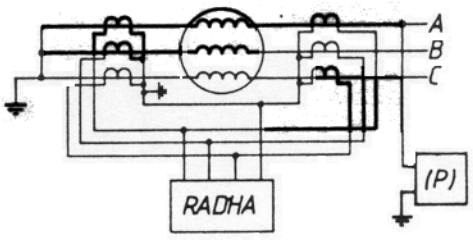


Fig. 9a Test set (p) connected between phase and the neutral point of the generator

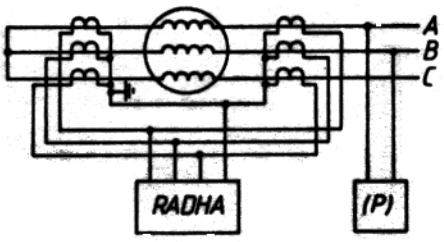


Fig. 9b Test set (p) connected between phases

The polarity of the current transformers can also be checked in an other way:

Connect the positive terminal of the moving coil instrument to secondary terminal S1 and negative terminal to the secondary terminal S2 of the CT. Connect the positive pole of the torch battery (4 V) to the primary terminal P1 of the CT.

Provided the secondary terminals have correct polarity the instrument will show a positive deflection when the negative pole of the battery temporarily is connected to P2. The instrument will show a negative deflection when the negative pole is disconnected.

**Ratio check of CT's for a generator the excitation of which can be regulated from 0 to 100 %**

Short-circuit the three phases outside the protective zone of RADHA. Wires, bars, clamps etc. must withstand the rated current of the generator.

Insert the test handle into the test switch.

Start the generator. Let it run at rated r.p.m. without excitation. Measure the current which is obtained by the remanence of the generator. If the current is some percent of the rated current of the generator it can be used for the first measurements. If the current is not sufficiently large, close the field breaker and excite the generator carefully up to approximately 5 % of the rated current of the generator.

Measure the circulating current in each phase from both sides of the generator i.e. the current through the terminals 1 to 4 and 5 to 8 in the junction box, see Fig. 8. The current should be equal in all phases and very small in the neutral (terminal 4 and 8).

Note! The current circuit must not be opened when the amperemeter is connected and disconnected. Pull out the test handle to its blocking position (RADHA is connected but the trip circuit is blocked). If any of the RXID 1 relays operates, push in the test handle again at once. If no relays operate measure the voltage across the non-linear resistors. This can be done on the rear of the test switch between the terminals 3-6, 4-6, 5-6 or across the terminals for the resistor unit.

If any of the RXID 1 relays operated or if the measured voltage amounted to some 10 % of the operate value, one of the CT's probably is connected with reversed polarity. Check and make required corrections and measure again.

Very low voltage up to 1 % of the operate value (measured across terminals 3-6, 4-6, 5-6) indicates that the polarity of the CT's is correct. If this is the case the test handle can be removed from the test switch.

Make sure that all other current circuits in the plant (both for protective relays and measurements) are closed and increase slowly the current up to at least 50 % of the rated current of the generator (preferably 100 %). Check the voltage across RADHA (3-6, 4-6, 5-6). If the voltage rises above 2 or 3 % of the operate voltage of RADHA this may be caused by some of the following reasons:

RADHA is not installed in the electrical mid point.

Different turns ratios of the CT's. There must be the same number of turns on both CT's in every phase.

Too different excitation characteristics of the two CT's in the same phase.

Remedy:

Replace the unsuitable CT's if possible or contact nearest ASEA representative for further information.

When the test is completed stop the generator and remove the 3-phase short-circuit outside the protective zone of RADHA.

**Ratio check of CT's for a generator the excitation of which cannot be regulated from 0**

All other protective relays should as far as possible have been tested and be in service. Also the polarity and current ratio of the CT's should have been tested.

Insert the test handle into the test switch. Change the circuits to allow tripping of the generator breaker only, if it is not desired to run the generator without differential relay. This will avoid an unnecessary stop of the turbine. When all precautionary steps have been taken start and synchronize the generator. Run the generator at low load and check the current in the terminals 1 to 4 and 5 to 8, see Fig. 8. The current shall be equal in all phases.

Note! The current circuit must not be opened when the ampere-meter is connected and disconnected.

Pull the test handle to its blocking position (RADHA is connected but the trip circuit is blocked). Measure the voltage between the terminals 3-6, 4-6 and 5-6 of the test switch in the same way as described on page 14.

Increase the current (active or reactive load) to at least 50 % of the rated current of the generator. Check the voltages again. If the voltages are lower than 2-3 % of the operate value of RADHA pull out the test handle. If the voltages are higher than 2-3 % it may depend on that RADHA is not installed in the electrical mid point or that the CT's have different turns ratios.

Restore the connections in the trip circuits if they have been changed.

**Trip test**

Check all trip circuits and indicating operations by causing RADHA to operate according to one of the following ways:

Short-circuit one CT on the secondary side and disconnect this CT from RADHA while the generator is loaded.

Connect the relay test set with an ammeter in series with the neutral and the connection blocks for one phase. The connection blocks must not be opened as the CT's are to be supplied with exitation current. Supply the current which is required for RADHA to operate. Note! Supply the current via an insulation transformer. Repeat the test in the remaining phases.

Make a short circuit within the protected zone. Start the generator and increase the exitation until RADHA operates.

## TEST OF RADHA AS DIFFERENTIAL PROTECTION FOR LARGE MACHINES AND AUTOTRANSFORMERS

Check the ratio and polarity of the CTs in principal according to the procedure as for automatic regulated generators (fig. 9). If the voltage across the differential circuit is negligible when the machine is run idle pull out the test handle. Measure the voltage across the differential circuit when the machine consumes start current.

## TEST OF RADHA AS BUSBAR PROTECTION

**Ratio and polarity checks**

Make sure that the CTs and current circuits of the busbar protection are correctly connected. Inject from a test set a large current through the primary circuit of one or more CT groups simultaneously and check that the secondary current and the differential current are of expected value (see primary test).

In some cases it may be necessary to perform the check when the plant is in service e.g. when a busbar protection is installed and due to that it is impossible to take the busbar out of service.

Normally the check should be made with a test set prior to a busbar or a part thereof is commissioned because:

There is always hazardous to energize a busbar, why the busbar protection at that occassion should be in service.

Fault tracing and adjustments are easier done if the busbar is not energized. It is more safe to personel to use a test set than to connect and disconnect test leads to current circuits. It is often troublesome and time wasting to perform all the primary load reconnections during service; reconnections which are required to completely test all circuits of the protection.

**Primary test**

The primary test procedure is specific for each plant. Here is an example of testing RADHA in a station with double busbars and breakers (fig. 10).

Inject a current between one phase and ground at a time. Do not use an other phase as return cable. Select one bay as reference (line 2) and compare the current transformers of the other bays with the reference bay. Prior to the primary test short-circuit temporalily the differential circuit of RADHA across the terminals 3B-4B-5B-6B on the test switch RTXP 18. Furthermore block all other protective relays e.g. ground fault relay, distance relay, which are connected to the current transformer groups to be tested. Check also that other protective relays not will be overloaded or operate when large primary current is injected (especially for ground fault relays). If so short-circuit the current circuits for these relays (e.g. ground-fault differential and transformer differential relays).

As the resistance of the primary circuit is much larger than the resistance of a current transformer the output voltage from the primary test set must not be too low.

Inject at each test as much current as possible from the test set. Note! do not overload the test set.

Measure the differential current in each phase for all zones and register the values for each one-phase injection.

During load reconnections, the differential currents for all zones, should be continously supervised.

Check the differential currents in the different zones after the station has been commissioned.

Remove the temporary short-circuiting 3B-4B-5B-6B on the test switch RTXP 18.

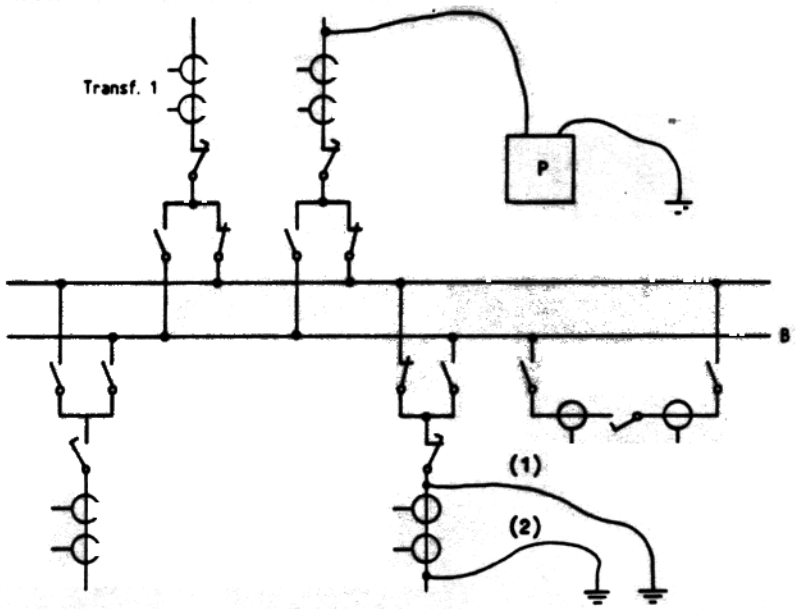


Fig. 10 Primary test of RADHA as busbar protection. (p=primary test set)

At internal fault (1) the differential current normally is:
in zone B equal to zero
in zone A and check zone equal to the quotient between the primary current and the current transformer ratio.

At external fault (2) the differential current normally is:
in zone B equal to zero
in zone A and check zone much smaller than the quotient between the primary current and the current transformer ratio, however not zero.

## TEST OF RADHA AS CHECK ZONE

Busbar protection of high impedance type are normally equipped with a separate supervision function denoted check zone. The check zone normally consists of a RADHA connected to separate current transformer cores on all connected breakers, except the busbar breaker. The test is performed in the same manner as the test of the zone protection and prefarably simultaneous.

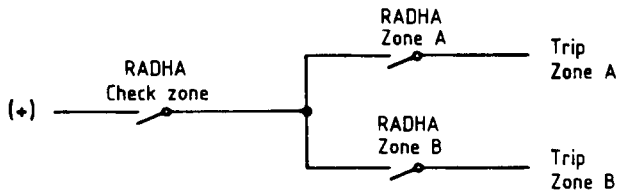


Fig. 11 RADHA as check zone

## SUMMARY

**Secondary operate value**

The operate value may deviate max ± 10 % from set value. Check that the operate voltage does not exceed 50 % of the saturation voltage for any of the CTs.

**Primary pick-up value (sensitivity)**

For RADHA used as generator or motor protection, the primary pick-up current should not exceed 5 % (at 1 A sec. current) and 3 % (at 5 A sec. current) of the primary rated current of the CTs.

If RADHA is used as busbar protection, the primary pick-up current depends on the number of CTs, which are connected and the current may reach 10-20 % of the primary rated current of the CTs.

**Stability calculation external faults**

The maximum permitted primary fault current must be larger than the largest fault current, which can arise at external faults. For a generator or a synchronous motor the maximum fault current symmetrical RMS value will be determined by the subtransient reactance of the machine.

If the protected object is a busbar the maximum fault current will be determined by the short-circuiting power of the network in this point.

**Stability tests**

During the measurements, which are performed when the generator (motor) is synchronized to the network and loaded with at least 50 % of the rated load, the measured differential voltages across the relay units must not exceed to 3 % of set operate value. If a measured differential voltage is higher, it probably depends on:

Different turns ratio in the CTs. There must be equal number of turns on all CTs in each phase connected to the type RADHA relay.

Too different exitation characteristics for the current transformers in the same phase.
Current circuits are by mistake grounded in more than one point.

## MAINTENANCE TEST

We recommend the following tests to be done once a year:

Check of RADHA pick-up value
Trip test

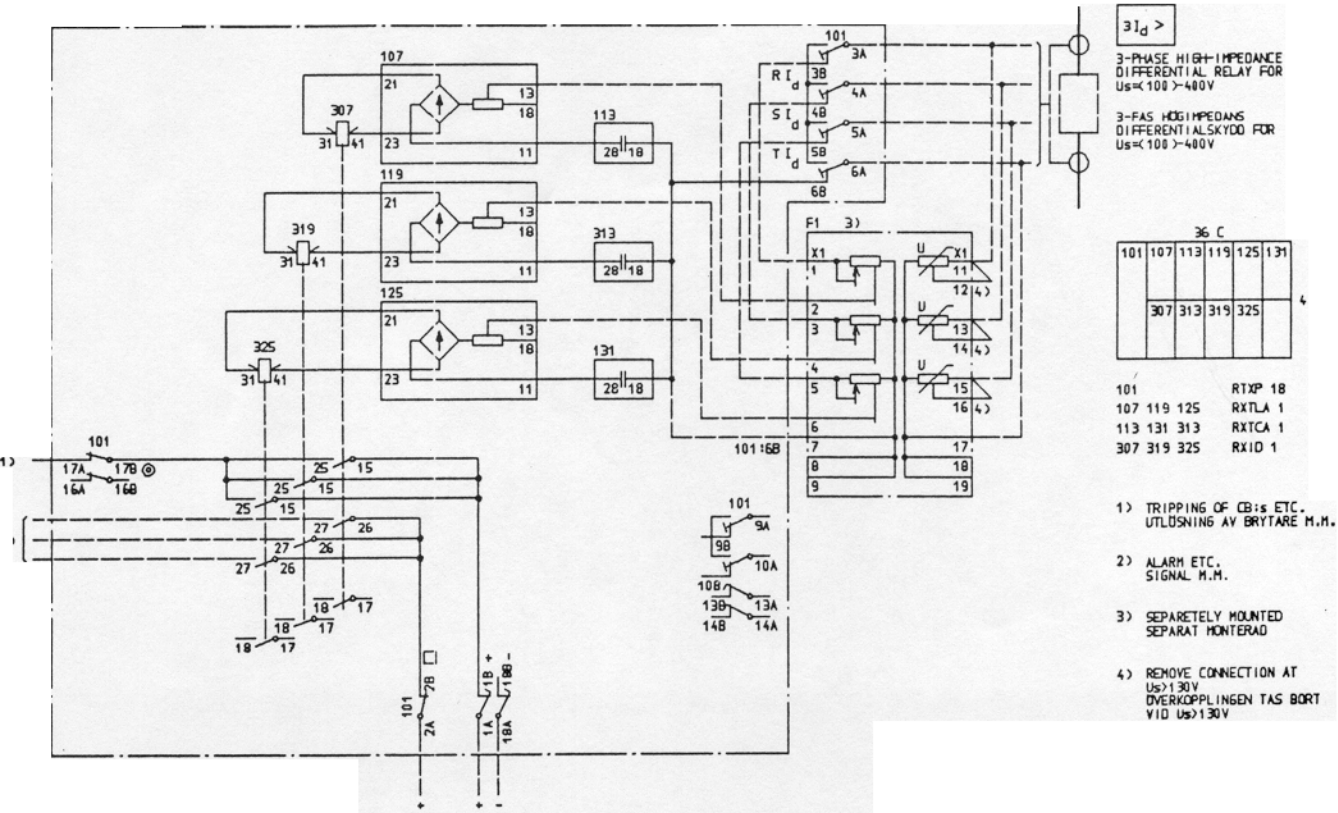


Fig. 12 Circuit diagram 7417 013-AC

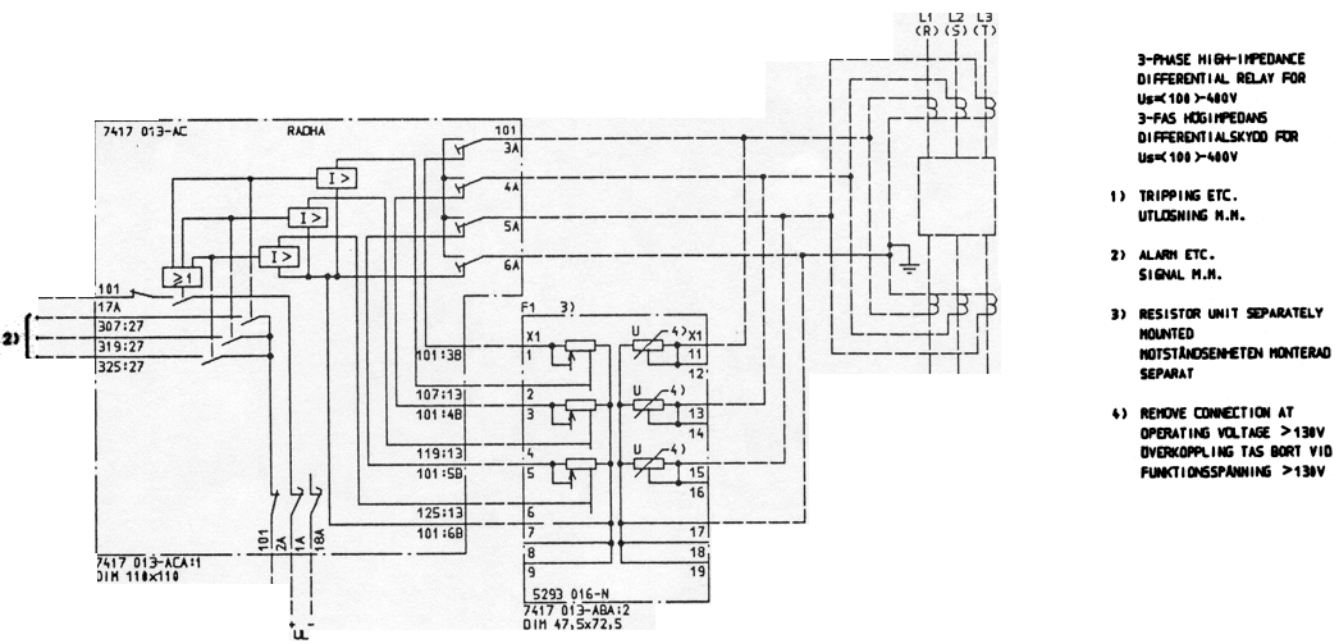


**Fig. 13 Terminal diagram 7417 013-ACA**

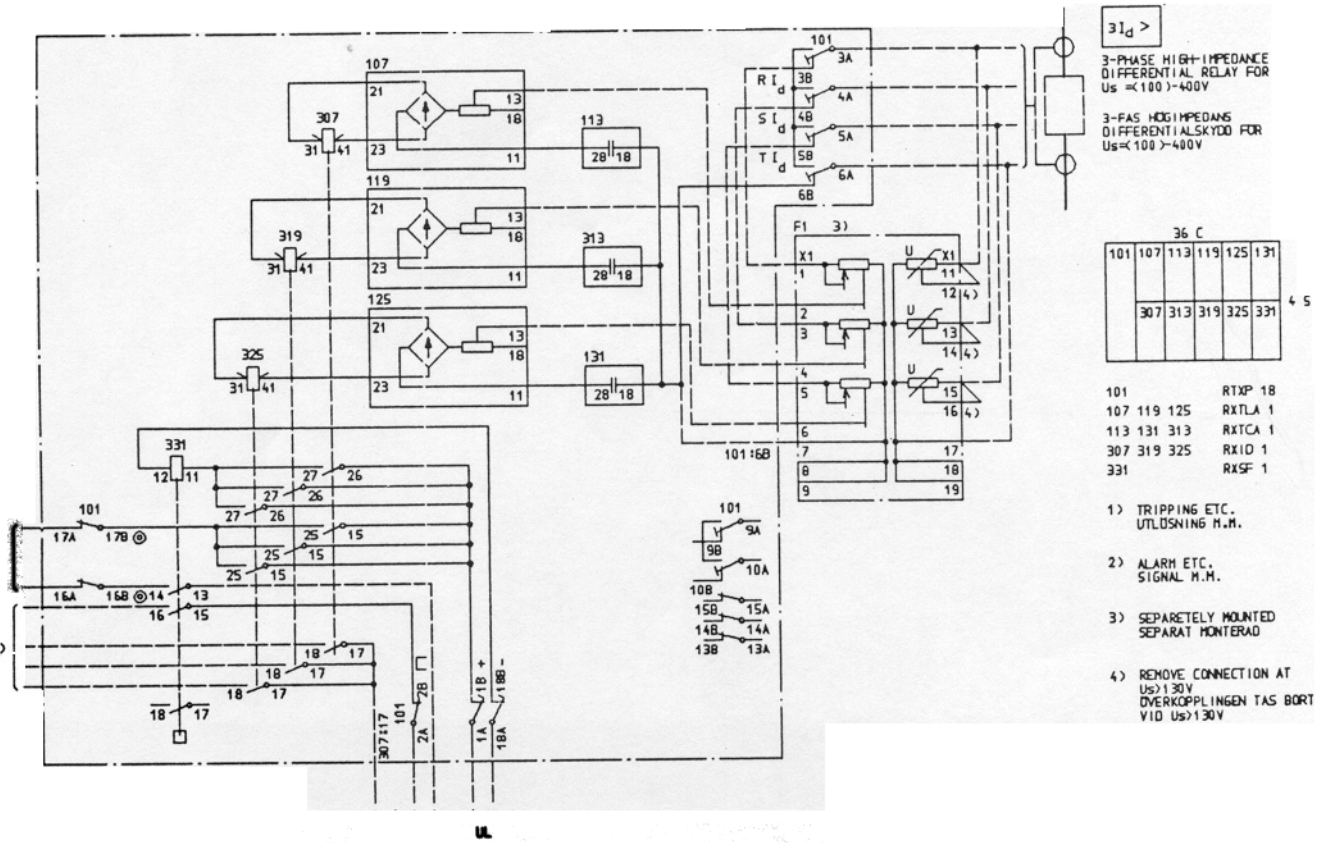


Fig. 14 Circuit diagram 7417 013-CA

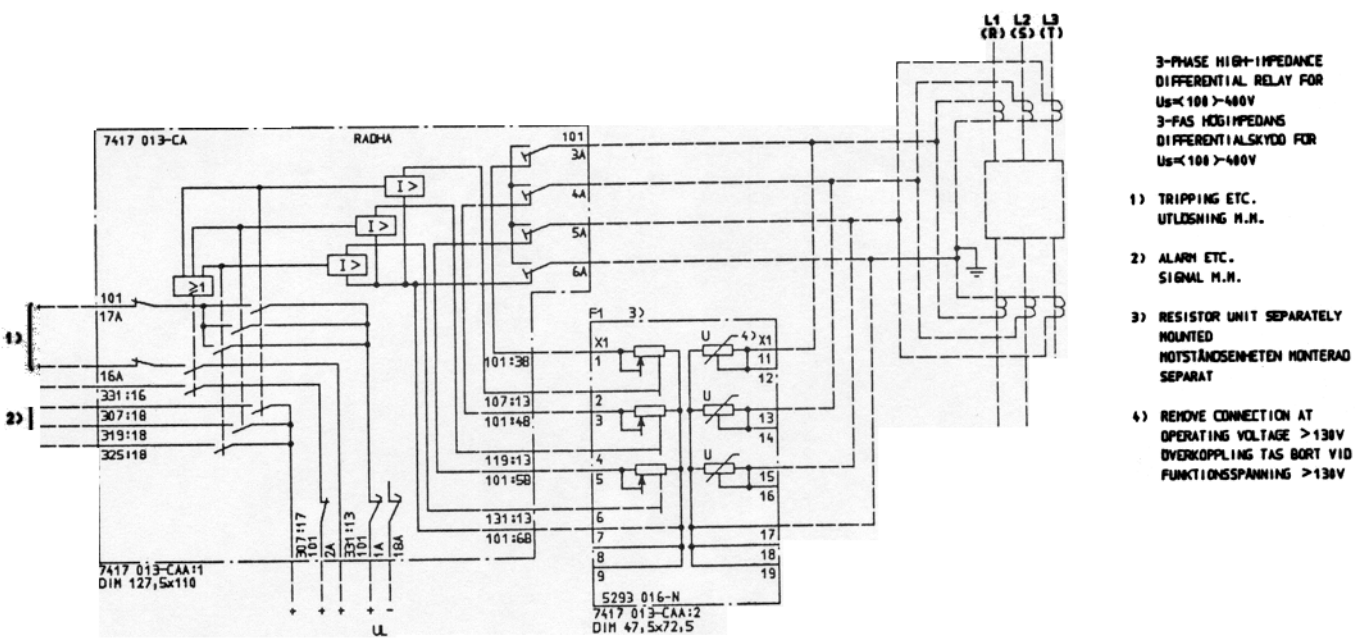


Fig. 15 Terminal diagram 7417 013-CAA

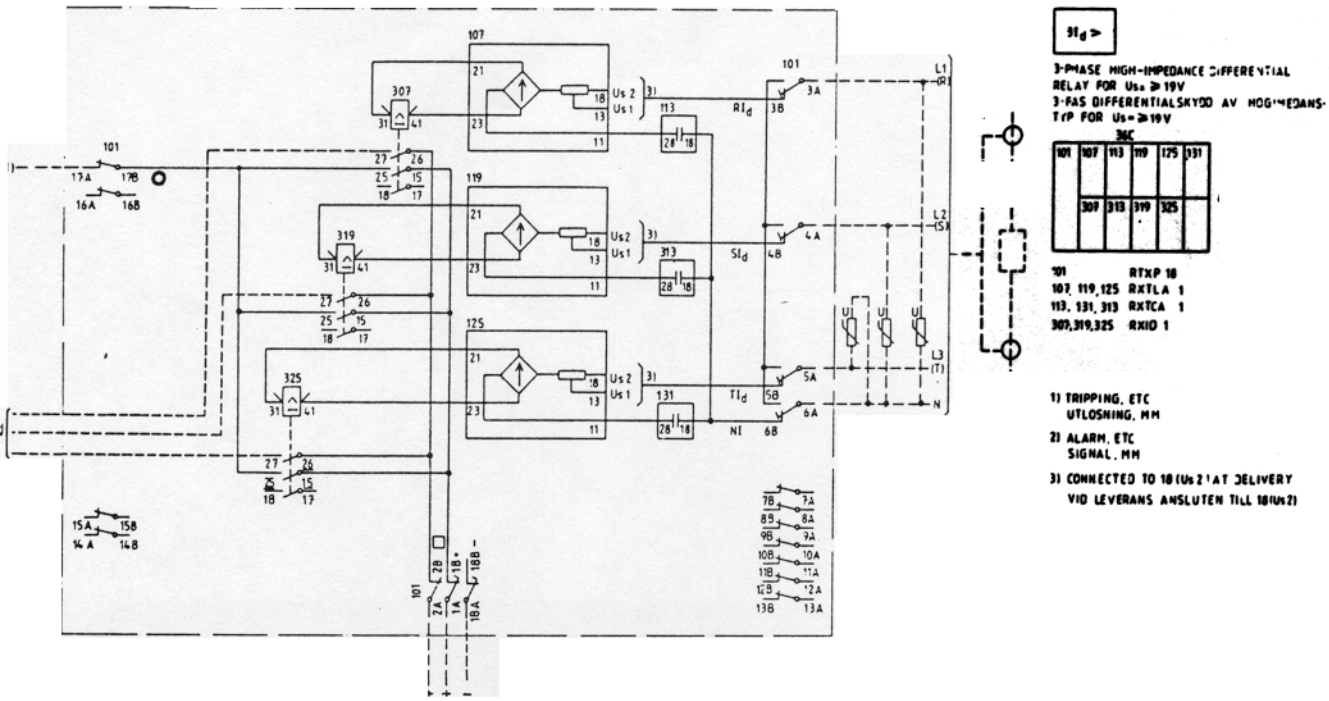


Fig. 16 Circuit diagram 7417 015-AA

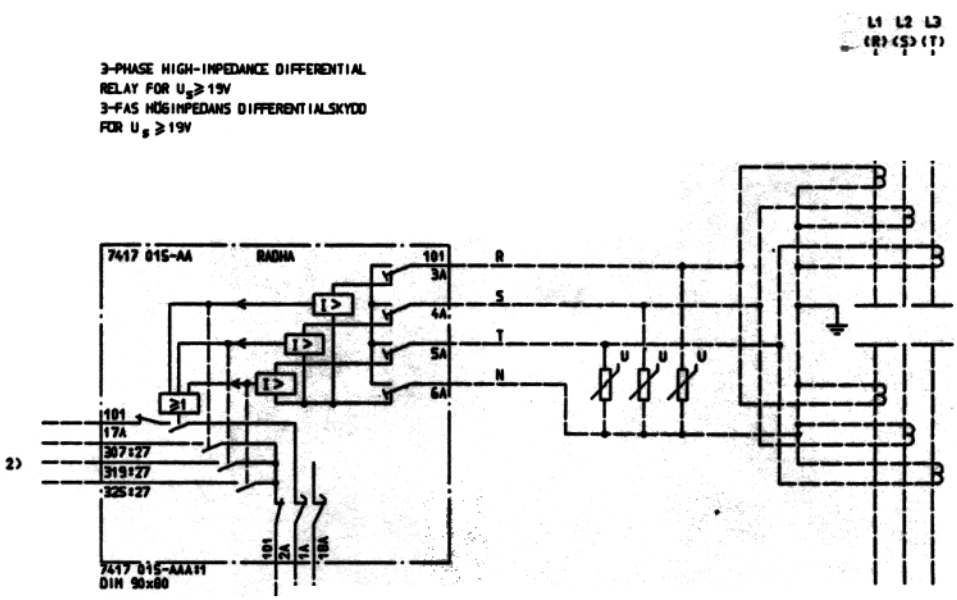


1) TRIPPING ETC.
UTLÖSNING MM.

2) ALARM ETC.
SIGNAL MM.

Fig. 17 Terminal diagram 7417 015-AAA

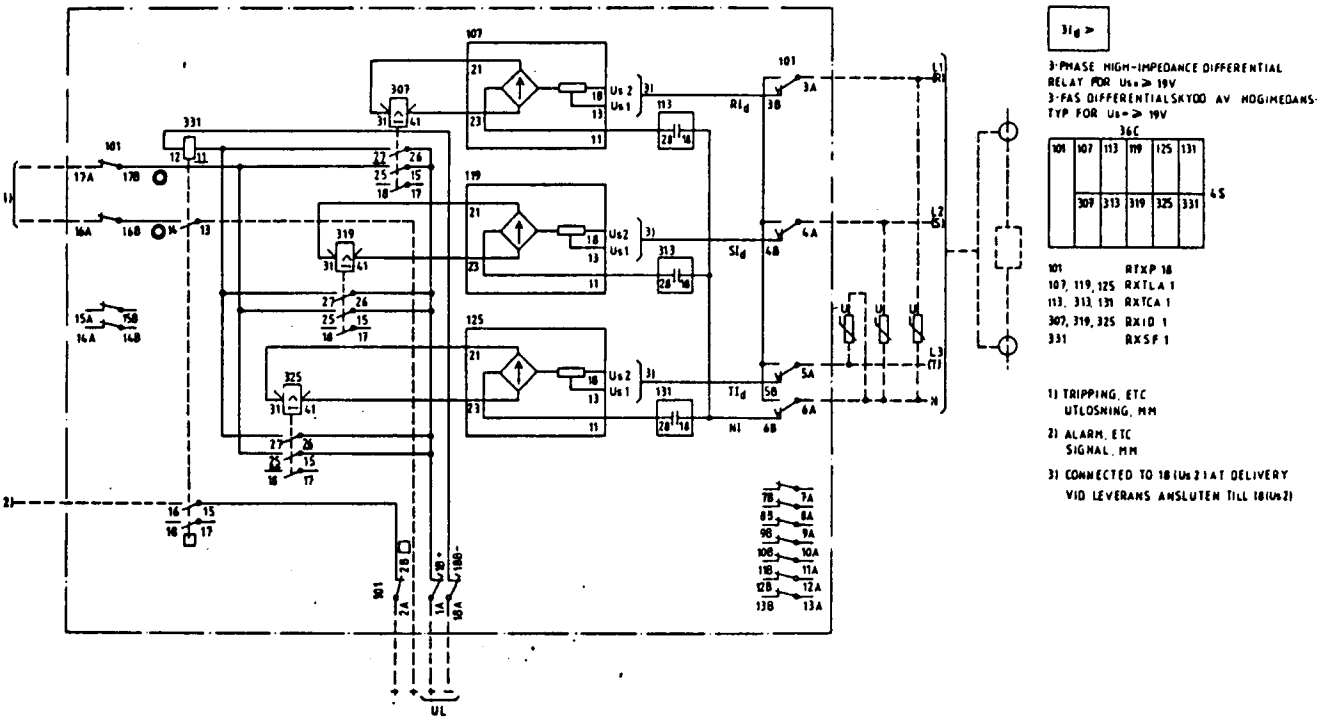


Fig. 18 Circuit diagram 7417 015-CA

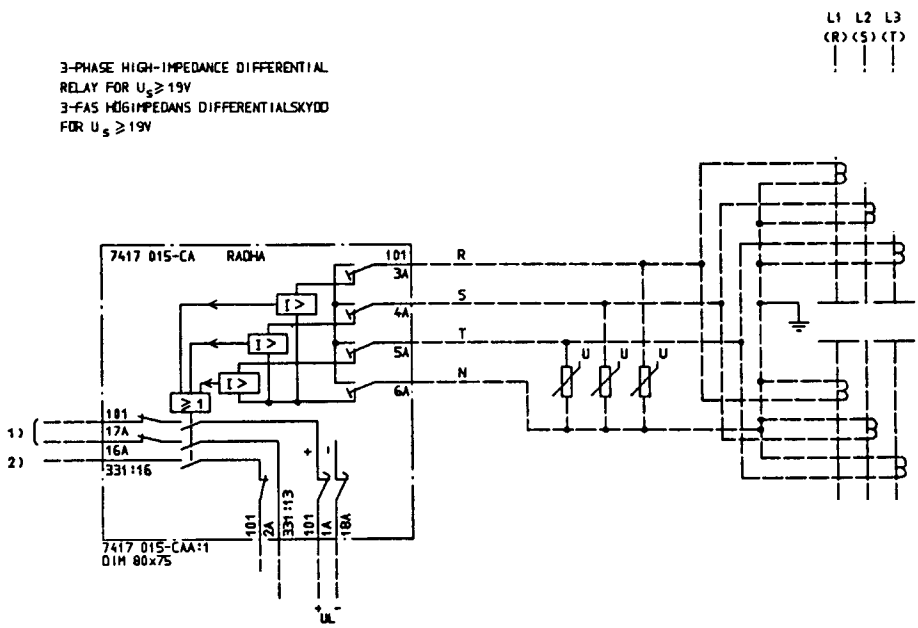


1) TRIPPING ETC.
UTLÖSNING MM.

2) ALARM ETC.
SIGNAL MM.

Fig. 19 Terminal diagram 7417 015-CAA

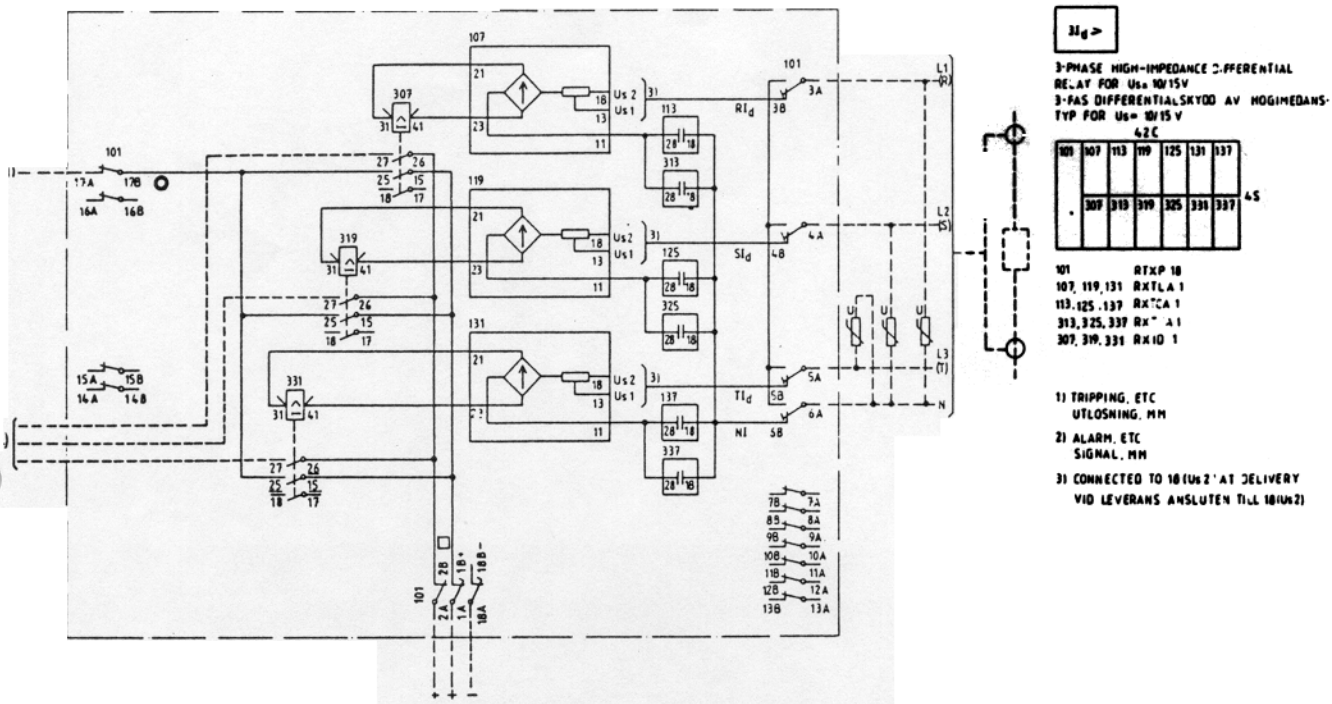


Fig. 20 Circuit diagram 7417 015-DA

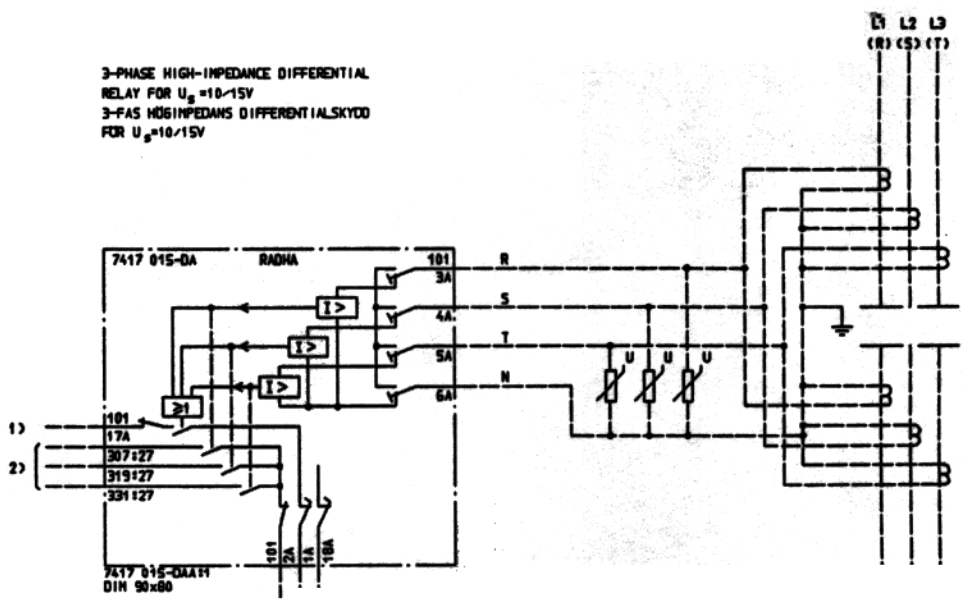


Fig. 21 Terminal diagram 7417 015-DAA

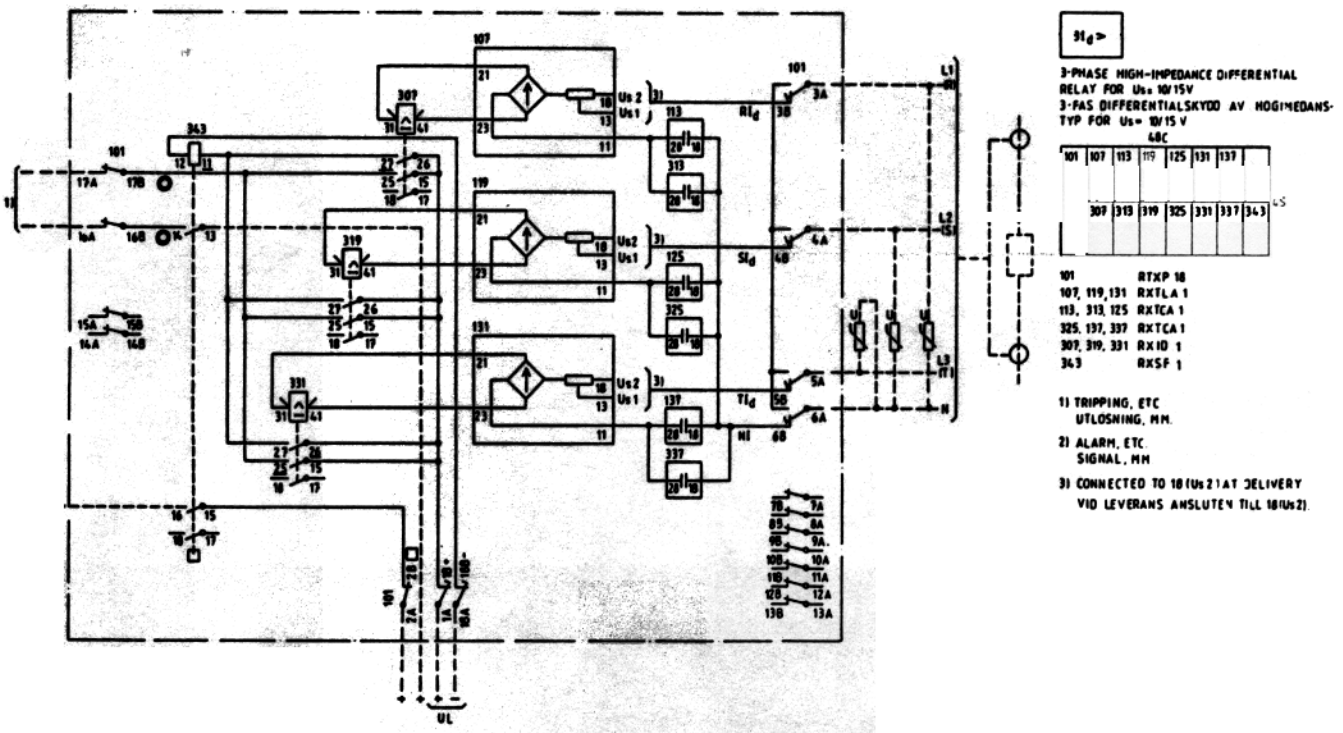


Fig. 22 Circuit diagram 7417 015-FA

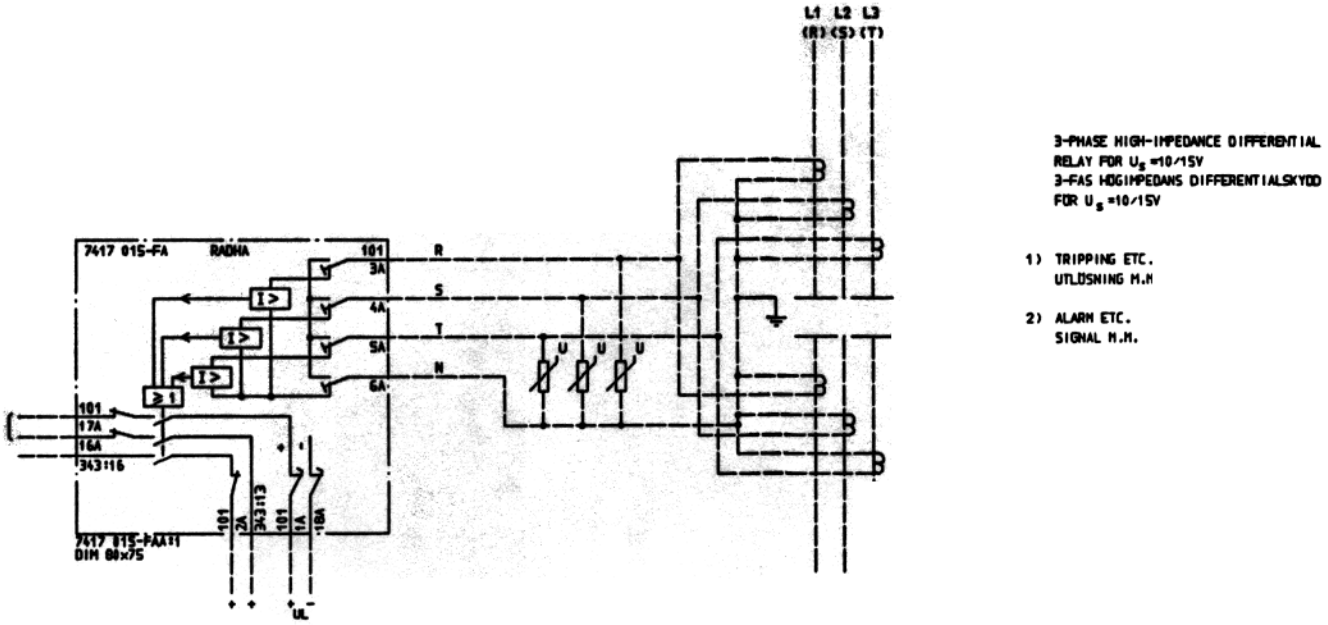


Fig. 23 Terminal diagram 7417 015-FAA