August 99

1. Application, Setting Up and Connection

1.1. Application 1-2

1.2. Checking the shipment 1-2

1.3. Connecting up and setting up for testing 1-3
1.3.1. Ambient conditions 1-3
1.3.2. Power supply 1-3
1.3.3. Setting up for testing and mains connection 1-3
1.3.4. Connecting the relay to be tested 1-4
1.3.5. Connection using test plug YX91 1-5
1.3.6. Connection via the banana sockets 1-6
1.3.7. Connecting an oscilloscope 1-8

1. Application, Setting Up and Connection

1.1. Application

The test set XS92b facilitates checking the operation and accuracy of protective relays in general, but especially of those having more than one input quantity (e.g. distance and directional relays etc.).

The basic version permits three adjustable current and three adjustable voltages to be applied to the relay under test. The phase-angle between the test quantities is also variable.

The test quantities can be changed either incrementally (static test) or as a step function (dynamic test) starting from zero or the load values to assume the set test values.

The user has the possibility of programming complete test cycles.

A test plug with the designation YX91 is available for testing relays in situ which enables the test set XS92b to be connected to a test socket Type XX91 or XX93 in the equipment rack of the relay.

Caution

Symbols:
The symbol used on the unit and in these Operating Instructions warns against coming into contact with high voltage (>30 V) or a hazardous operation.

Refer to Data Sheet 1MRB520006-Ben for the technical data of the test set.

1.2. Checking the shipment

Should the shipment be found to be damaged upon receipt, a claim must be lodged immediately in writing with the last carrier and the facts notified to ABB Power Automation Ltd., Dept. NAP, CH-5401 Baden, Switzerland.

The details shown on the rating plate attached to the unit must agree with those on the delivery note.

1.3. Connecting up and setting up for testing

1.3.1. Ambient conditions

Both the locations where the test set is used and where it is stored should be as free as possible from humidity, dust, acidic fumes etc.

In order to ensure the necessary cooling, the distance of the rear plane of the XS92b to any vertical surface or wall must be at least 10 cm.

1.3.2. Power supply

Rated voltage 230 V (115 V)

The test set XS92b is designed to operate in one of the following power supply ranges:

98 to 132 V AC, 50/60 Hz

195 to 264 V AC, 50/60 Hz.

The change between these two ranges has to be switched at the back of the current amplifier rack AI93.

Caution:

Please note that the module AU92, **must also** be specified for a rated voltage of 230 V AC.

Units of these types having a rated voltage of 220 V must **not** be replaced by the new types, or the test set may only be used in the old voltage range.

1.3.3. Setting up for testing and mains connection

The test set comprises two parts which are supplied in two transport cases. The units have carrying handles for lifting them out of their cases. The rack AD93 containing the plug-in units NF92, AU92, XC92 and the options YS92 and YU92a is placed on top of the AI93 containing the amplifiers AC93 and the LED's (IL1 to IL3) before wiring up. When doing so, place the feet of the upper rack in the depressions in the top of the lower one to prevent it from slipping off. Then connect the PC to the nine pin socket on the front of the XC92 using the cable YX92-2 or YX92-4. Alternatively, a handheld terminal YB92 can be connected.

Do not place anything on top of the upper rack which could impairing the cooling of the units during operation.

Caution: The two signal cables between the racks on the right and the left must be inserted before connecting the power supply. The AC supply cable on the left of the racks must be inserted (short cable with grey four-pole sockets).

Also before connecting to the mains, ensure that the supply voltage is indeed within one of the ranges given in Section 1.3.2. and the AI93 is switched to the correct range. The equipment must also be grounded via the power plug!
Where the supply voltage does not lie within the standard ranges, a transformer (approx. 500 VA) must be used to match up the supply.
If the AMP test socket is going be used, insert the jumpers provided (4 mm diameter pins) into sockets "I" and "(I)" on the AC93 unit of each phase.

Note:

The memory unit YS92 may only be inserted **into** the socket immediately next to the control unit XC92 (see Fig. 2.2). The socket to the right of the YS92 is reserved for **options**.

Note:

The test set XS92b complies with the requirements of Class B, providing the housing is grounded via a low impedance (for RF up to 50 MHz) copper braid.

If the grounding braid is not installed, the limit of Class B will be slightly exceeded from 31 to 34 MHz!

1.3.4. Connecting the relay to be tested

The relay can be connected to the test set using either the test plug YX91 and the test socket XX91/XX93, or laboratory leads and the banana sockets on the front of the XS92b.

1.3.5. Connection using test plug YX91

Firstly insert the test cable plug into the AMP socket on the front of the AI93 unit (11 in Fig. 2.6) of the XS92b (Fig. 2.1) and then the test plug YX91 into the test socket XX91 or XX93 on the relay.

Caution:	During operation, dangerous voltages (up to 250 V) can occur across the contacts of the test connector and also across the contacts of the black plug connector on the AC93 module.

Check also that the jumpers are inserted between sockets "I" and "(I)".

The sockets marked 1 to 12 (2 mm diameter) on the front of the test set (14 in Fig. 2.6) are connected in parallel to socket "B" adjacent to them and correspond to the connections A1 to A12 of the test connector XX91 (Fig. 11.1).

Caution:	Dangerous voltages (e.g. station battery voltage) can occur across these sockets due to the connection via the test socket unit XX91!

Where the operating time of a relay has to be measured, firstly determine the corresponding contact numbers of the test connector XX91 to which the **potentially-free** contact of the relay under test has to be connected (refer to the diagram of the relay concerned) and then connect the 2 mm sockets with the same numbers to the sockets "+" and "–o/o–" using the leads provided.

Caution:	Care must be taken not to connect a socket which is otherwise connected to the station DC to the sockets "+" and "–o/o–" by mistake!

Only place the switch on the test set plug YX91 in the 'on' position after all the connections have been made.

1.3.6. Connection via the banana sockets (4 mm diameter)

With the exception of its auxiliary DC supply, the relay to be tested must be completely disconnected from the station wiring.

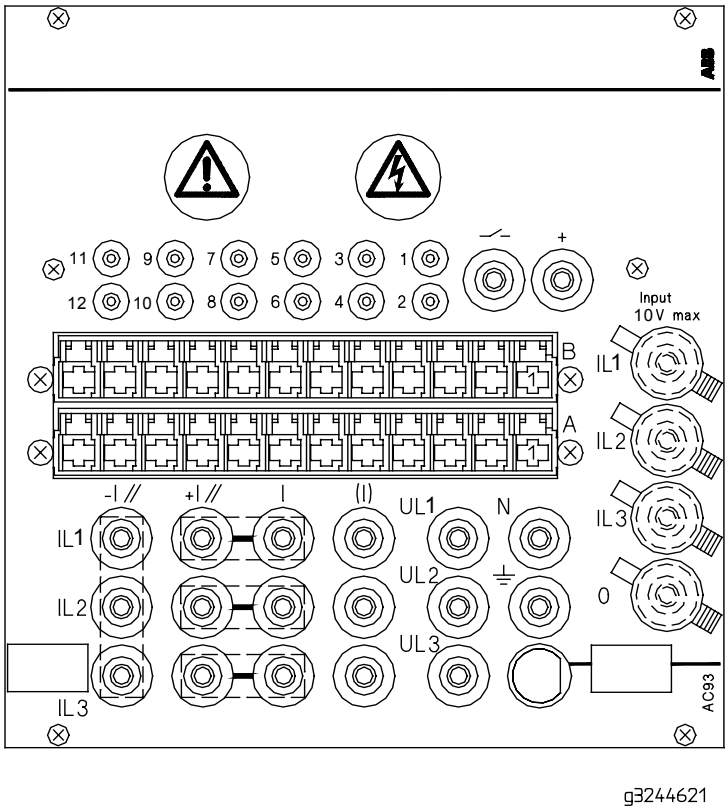

Fig. 1.1 Connections on the AC93 unit

The following connections may then be made to the 4 mm sockets (14 in Fig. 2.6):

- sockets "+I//" and "-I//" to the current input of the phase to be tested (current direction from "+I//" through the relay to "-I//"). All the sockets "-I//" are commoned so that only one connection is necessary, for example, from the star-point of the of the current circuits on the relay to any "-I//" socket.

  The sockets "+I//" are internally wired per phase to the sockets "I".

  Should it be necessary for the currents and voltages to be available at the plug connector "A" (e.g. when using test connector YX91), the jumpers provided must be plugged into "I" and "(I)" (see Section 1.3.5.).

- sockets UL1, UL2 and UL3 to the corresponding voltage inputs on the relay

Caution:	Dangerous voltages (up to 250 V) can occur across these sockets!

- socket "N" to the star-point of the voltage inputs
- the 2 mm sockets (4 mm on newer units) "+" and "–o/o–" to a potentially-free tripping contact
- digital signals up to 250 V DC may also be connected for processing to sockets In1 to In10 (2 mm diameter) on the front of the control unit XC92 in rack AD93. These inputs are electrically insulated from other XS92b circuits.

When using the plug connector "A", a low burden ammeter may be connected between the sockets "I" and "(I)" in place of the jumper.

In this case, the connections are made to the plug connector A as follows (from right to left):

A1	current I_R (IL1)
A2	current I_S (IL2)
A3	current I_T (IL3)
A4	current star-point at AX92
A5	spare
A6	spare
A7	voltage U_R (UL1)
A8	voltage U_S (UL2)
A9	voltage U_T (UL3)
A10	spare
A11	voltage star-point
A12	spare.

1.3.7. Connecting an oscilloscope

A trigger impulse is provided on the test set XS92b in order to observe the relay response times on an oscilloscope. The trigger impulse is available at the BNC socket, resp. at two sockets (4 mm diameter) on older versions, located on the right of the upper equipment rack (see 17 in Fig. 2.7) and can be connected to the CRO trigger input or the trigger input of some other recording instrument.
The signal (+5 V, $R_i \cong 3.5$ kΩ) is generated one period before the injection signal and has a duration of one period.

Make sure that the sleeve of the BNC socket, resp. the socket (4 mm diameter) marked "GND" is connected via a 1 kΩ resistor to the socket "N" on the output unit AX91 or AX92 and not to the current outputs.

Caution: Do not remove the ground connections in racks AD93 and AI93 (e.g. when dismantling the handles to mount the unit in a rack)!

Caution: Unplug the power cable before withdrawing or inserting modules!

Computer-based three-phase test set

XS92b

1MRB520006-Ben
Page 1
Issued: October 1999
Changed: since April 1996
Data subject to change without notice

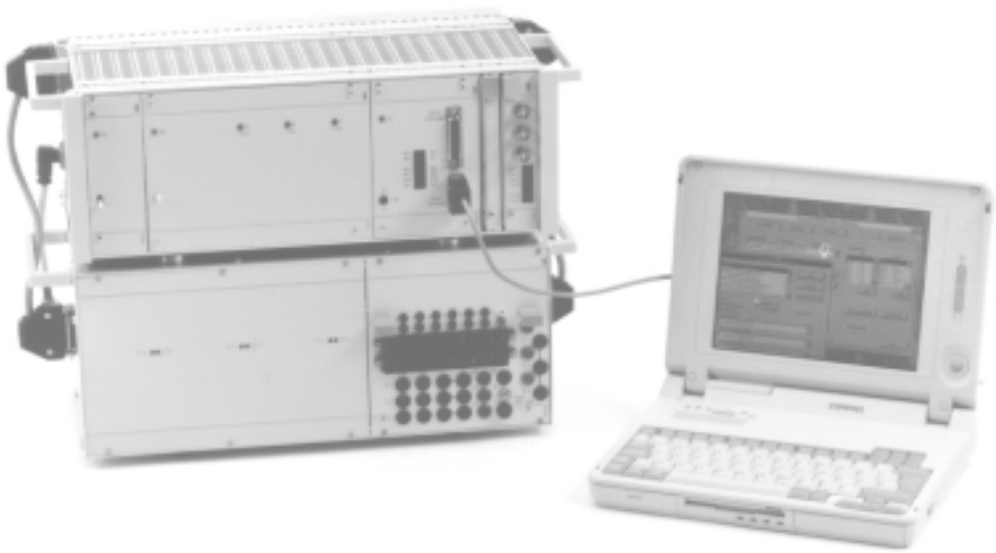

Features

- Easy Testing Of Line, Generator, Transformer, Busbar And Circuit Breaker back-up protection
- Exact simulation of the three-phase voltages and currents of a three-phase system
- Three-phase current output 20 A/100 VA
- Paralleling of two current amplifiers for single-phase current increase up to 40A
- Voltage output 25-50 VA
- MS-Windows human machine interface
- Mode of operation: manual, automatic search, printing, execution of dedicated programs, control by remote PC or by hand terminal
- Static or dynamic output, with or without gradual change of fault quantities
- No additional instruments required
- Entering of system characteristics using source and fault impedances or voltages and current
- Re-injection of transient analogue signals from a disturbance recorder or externally calculated quantities
- Synchrocheck testing by two variable phase voltages or two three-phase voltage systems
- Voltage output with variable frequency of high accuracy and adjustable rate-of-change df/dt
- Connecting test set and relay: relay-dedicated test cable and test plug, or universal connector on the front
- Programmable digital signal outputs
- Serial interface for connecting peripherals
- Accurate quartz time measurement
- Only single-phase mains supply required
- Generation of the test quantities via D/A-transducers, and thus insensitive to disturbances in the power supply
- Portable: The test set with its accessories is placed into two transport cases.
- Upgrading kit for XS92a

Application

The test set type XS92b has been designed for testing the functionality of all kinds of protective relays (frequency, distance, directional or power relays etc.) as well as being an aid for recording the operating and tripping characteristics of such relays.

It contains a 16 bit microprocessor which permits dynamic and static testing within wide ranges, whilst selecting current, voltage, phase-angle and impedance as parameters.

The parameters current, voltage or impedance can be set in amplitude and phase-angle and their entry determines the output quantities, three-phase voltages and three-phase currents for the basic version. The exact simulation of the test quantities for the different kinds of faults, whilst taking into account the impedances of the fault loop and the source, enable various protection equipment to be tested under conditions extremely close to actual system conditions.

Since the test quantities are first calculated and then transformed into an analogue signal in a D/A converter, they are unaffected by spurious signals (e.g. harmonics) contained in the supply voltage.

The values of the settings can be checked by simply calling them up on a PC or onto a two-line liquid crystal display utilizing the hand terminal (option).

The user can write testing sequences which correspond to his own particular circumstances and store them, or retrieve them, from the memory unit type YS92 (option). Test programs for various protection relays are available. For routine testing this results in a great deal of time saving.

Design

The XS92b consists of the following units: (Fig. 1; some options are included)

AD93, the upper rack, containing:

1. Auxiliary supply unit, type NF92
2. Voltage amplifier unit, type AU92 with the amplifiers for the voltages U_R, U_S and U_T
3. Control unit, type XC92, with processor, D/A converter, PC or hand terminal connector, serial interface, ten digital inputs and one digital output

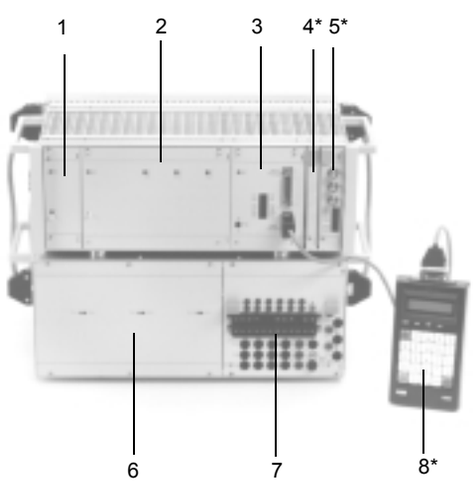

Fig. 1 Racks and plug-in units of the test set XS92b
*4, 5 and 8 are options

4. Memory unit, type YS92, for storing programs (option)
5. Output unit, type YU92a, for two variable phase voltages (in order to test synchrocheck relays) or an additional three-phase voltage system and six programmable binary outputs (option)

AI 93, the lower rack, containing:

6. Current amplifier unit with the amplifiers for the currents IR, IS, IT
7. Output unit, type AC93
8. Hand-terminal, type YB92 (option)

A third rack AU93 (option) can be added for a second three-phase voltage system (if necessary for testing synchrocheck relays).

The AU93 contains the following units:

- Power supply unit, type EX92
- DC/DC converter, type NF92-2
- Voltage amplifier, type AU92
- Output unit, type AX93a.

Explanation of the block diagram (Fig. 11**)**
The power supply of the test set (230/115 V, 50/60 Hz) is switched by the mains switch at the rear of the AI93 to the auxiliary supply unit NF92 and to the amplifiers.

The test signals are calculated from the parameters entered in the control unit, XC92, and passed on via D/A converters, filters and amplifiers to the output unit AC93.

Connecting the relay to the test set

The relay to be tested can be connected to the test set using either the sockets (on unit AC93) or the test connector, comprising a heavy current plug, a multi-core cable and a test plug, type YX91. The latter is for testing a relay without removing it from its rack and requires that the scheme be equipped with a corresponding test socket (e.g. test socket, type XX91 or COMBITEST RTXP). The YX91 test plug or the RTXH test plug handle must interrupt the measurement transformer circuits, short-circuiting the CTs, and isolating the tripping circuits.

General operating sequence

All entries of the test parameters are made on a PC or hand terminal where the display is also located or on a corresponding computer terminal with serial port.

- Entry of test and control parameters.
- Pressing the start key.
- In the control unit, XC92, the internal calculation of the output quantities ($U_{R,S,T}$ and $I_{R,S,T}$) is carried out. Following the connection of the output quantities calculated for the desired type of fault to the relay tested, measurement of the tripping time commences.
- Following occurrence of the tripping signal with a combination of digital inputs or elapse of the set testing period (t_F), the time measurement is stopped and the test quantities interrupted. The last value of the parameter which was varied and the operating time appear.
- The resetting time can be measured in lieu of the tripping time.

Quantity for injection

The XS92b enables static and dynamic injection. The following sequences may be selected for dynamic injection:

- no injection fault quantities no injection (SQ = 0F0)
- no injection fault quantities healthy voltages (SQ = 0F1)
- healthy voltages fault quantities no injection (SQ = 1F0)
- healthy voltages fault quantities healthy voltages (SQ = 1F1)

and for static injection:

- test of the digital inputs without injection
- test of the digital inputs with injection of healthy voltages.

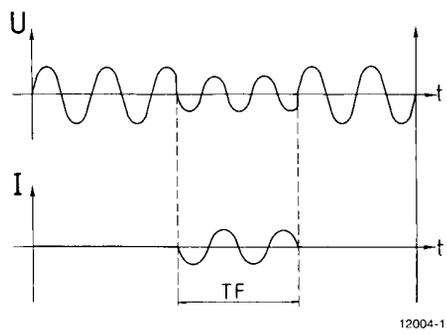

Fig. 2 *Test quantities generated for dynamic testing.*
TF = duration of injection

Human machine interface (HMI)

The human machine interface is running under MS-Windows via PC or via the hand terminal (option) having a keyboard and a two-line liquid display. The Windows HMI (Human Machine Interface) enables graphic representation of the injected and measured values such as time, voltages, currents and impedances. A test library contained in the operator program permits the basic testing of the most important relay characteristics. These can be connected to a test program. Dedicated programs for various relay types are already available. Externally calculated curves as well as fault files from a disturbance recorder can be transferred and stored in a memory card YS92 (option) and injected via the D/A converters and amplifiers.

Modes of operation and control of the XS92b

The parameters for the signals calculated in the XS92b can be entered via the HMI (Fig. 3). The test set has its own programming language for entire test sequences which are also entered via the HMI. Aside from a substantially greater comfort with regard to control, the PC offers in addition the possibility of graphically representing the current and voltage indications or to follow the test sequence in the impedance plane, etc. (Fig. 4) shows an overview of the control of the XS92b and the corresponding test possibilities.

Table 1: Overview of the control possibilities

Operating mode	Description	Necessary options	Remarks
Manual operation	Entering parameters manually for the output of a single test point		
Manual operation with automatic search sequence	Changing a test quantity in steps, optional interruption of the search program on the reaction of the relay under test		
Program sequence	Programming a test sequence in the test language of the XS92b		Supplementary memory unit YS92 is necessary when using the hand terminal.
Program sequence with ABB test programs	Complete test program on memory-card YS92 for testing of a complete relay	Supplementary memory unit YS92 incl. program or program on floppy disk	Program has to be loaded on YS92 using a PC HMI
Search sequence with graphic display	Search sequence with modification of impedance, angle, current, voltage, inverse characteristic	YS92 required	Only running with Windows HMI via PC
Program sequence with graphic display and theoretical characteristic	Testing a complete protection unit with graphical display and comparison between measured and reference values. For REL316 the protection setting is read directly off the setting file or the protection unit	no YS92 required For REL316, from Version 1.2	
Injection of transient test quantities (user characteristics)	Injection of any characteristic sequences, max. 204 period memory. For disturbance recorders having the format Indactic 65 (RE.316, RE.216, REOR) and COMTRADE a conversion program for PCs is available. The format for XS92b is described in the "Instructions for installation and operation" 1MRB520014-Uen.	Conversion program XSCON for converting the Indactic 65 format into the XS92b format.	

Modes of operation

On manual operation the parameters for the calculation of a specific test setting are entered.

The dimensions of the quantities to be used for controlling the test are selected by first entering "UI", "UI3" or "ZZ". In the case of "UI" the parameters are voltage, current and phase-angles and in the case of "ZZ" impedances and phase-angles. In accordance with the kind of fault selected, the test currents and the voltages of the three-phase system are simulated. The parameters appear with their dimension. By using the application for two variable phase voltages or for the second three-phase voltage system, the test is selected by entering "UU".

In the mode UI the test quantities can be superimposed with the harmonics (2nd and 9th harm.)

The calculated test quantities are injected either statically or dynamically in accordance with the selected injection mode.

Manual operation with automatic search sequence
If when entering the parameters, "A" is set to 1 or 2 and a step value given for a parameter, it will be cyclically incremented or decremented by the amount of the step value, depending on whether the button "+" or "-" is pressed after the start button.

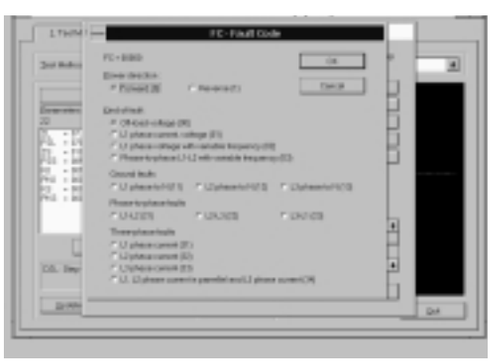

Fig. 3 Parameter entering

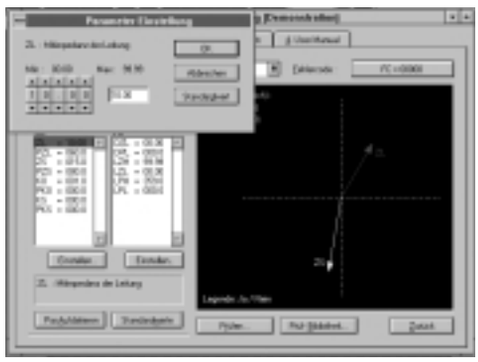

Fig. 4 Graphic representation

Fig. 5 shows an injection sequence during step-by-step testing, whereby, in the example shown, the current, I, is changed in steps of DI (static testing). During an automatic search sequence with dynamic injection, the injection is repeated for each new value of the parameter changed, step-by-step. In the event that the control unit, type XC92, over its digital inputs receives a pickup signal (e.g. a trip signal) from the tested relay, then injection is discontinued. Subsequently, the actual value of the changed parameter and the pickup time are displayed.

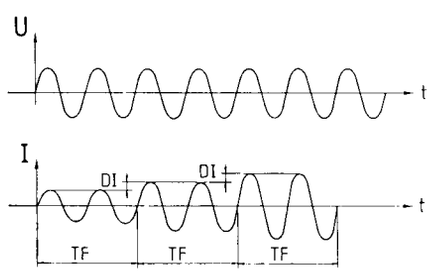

Fig. 5 Changing the parameters step-by-step

Controlling the test set with the PC HMI enables the user to display and follow the injected test quantities by a pointer.

Program operation
Programs are entered in the form of command lines. Among other things these commands determine:

- Parameter definitions and conversions
- Arithmetic operations
- Injection of consecutive testing sequences
- Scanning digital input signals
- Setting of digital output signals
- Loop programming

Modes of operation (cont´d)

- Comparison of values with jump instructions
- Setting of limiting values
- Output of data and text via the serial interface, etc.

Such programs enable the measurement of one or several operating characteristics for different kinds of faults and the reporting of the results. Depending on the size of the programs, several can be stored in the optional memory unit, type YS92. A program can be entered by using an HMI.

There are complete programs available for most of the protection units of ABB Power Automation as options (see section Ordering).

Search sequence with graphical display
Complementing manual operation with automatic search sequence (changing one of the step parameters voltage, current, line angle, line impedance, frequency), there is a library of short test programs. These test programs are called upon by the Windows HMI via PC. This library enables the simple execution of a number of search sequences (Fig. 6) for impedance, directional characteristic, current, voltage and inverse characteristics. Several of such search sequences can be linked to a program to be filed. In addition the HMI displays such search sequences on the PC in a tabulated and graphical form and generates a report.

Fig. 6 Search sequence

Program operation with graphical display and theoretical characteristic
This mode of operation fundamentally differs from the one described above: Here the automatic search sequence takes the theoretical characteristic as a basis. This allows high testing speeds and extremely simple control of the relay to be tested. The search sequence can be set up by the user.

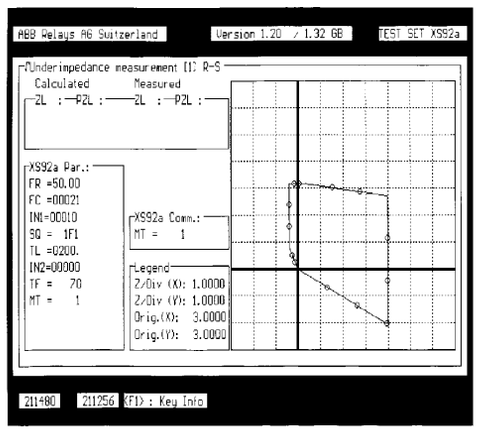

Fig. 7 Theoretical characteristic with test points

For numerical relays, the theoretical characteristic can be calculated directly from the setting file. The PC calculates the test points for the search sequence on the basis of the theoretical characteristic. For this, a new, ABB-patented procedure is applied: The search sequence is always performed perpendicularly to the characteristic part considered (straight line, circle, circular arc, inverse). The actual values of the characteristic are displayed graphically together with the demand values (Fig. 7).

For testing several types of the REL... family, the HMI has ready-made test programs.

Injection of transient test quantities
In the RAM of the XS92b transient signals can be stored and injected via amplifiers. The transient signals contain in addition a period of operating quantities which are injected for a settable duration ahead of the transient part.

Thus signals can be calculated with any program on an external computer or recorded with a disturbance recorder and subsequently stored in the XS92b via the serial port. For storage in the COMTRADE format and in the INDACTIC 65 format (INDACTIC 65 RE.216, RE.316, REOR) a conversion program XSCON is available which generates the format required for the XS92b.

The injection of disturbance recorder signals enables the user to reproduce faults. The calculated curves may also be stored on the memory unit YS92 (option) thus making the transfer from the PC superfluous.

Options and extensions

Memory unit, type YS92
The memory unit contains 8 EEPROMs. The EEPROMs may be read and written upon, the memory units retain their content when switching off the test set.

The user may store his own programs on the EEPROMSs or the specific relays programs made by ABB Power Automation.

Increase of the current output
A selection on the right side of the upper rack AD93 enables paralleling of two current amplifiers of the basic version.

Ancillary voltage amplifier rack
The XS92b equipped with the option YU92a can be supplemented with an ancillary voltage amplifier rack with a second three-phase voltage system which is settable, independently in frequency and amplitude of the first one.

The unit YU92a has three sockets on the front plate for the output of a second voltage system e.g. for testing synchrocheck relays. Together with a selector on the right side of the upper rack AD93 of the basic unit it is possible to emit also two phase voltages of the basic unit with various frequencies and variable angle and amplitude.

Additional signalling relays
Furthermore the unit YU92a contains six signalling relays with free contacts and sockets on the front plate which can be switched over in a test program.

Measurement signal outputs
The measurement signal interface YU33 (Option) allows the output of the test quantities as measurement signals for the standardized values U_N = 6.5 V and I_N = 125 mV. The entered values referred to 100/110 V and 1 A are then converted automatically.

Test connector YX90/YX91
In order to facilitate connection of the tested relay to the XS92b, there are different test connectors available:

Fig. 8 Test connector, type YX91-4.

YX91-4
For testing of MODURES protection installations with test socket, XX91 built into the rack (distance relays among others) or XX93 in a separate casing (Fig. 9).

YX91-6
For testing protection schemes equipped with ABB comb-type test connectors (e.g. for distance relays, type LZ3).

YX91-7
For testing of other protection schemes, whereby the test connector is supplied with loose ends on one side (4 mm banana plugs).

Also suitable for 316TSS01 with test connector RTXH (Fig. 10).

When using the above test connectors the tripping information is automatically signalled from the tested relay back to the XS92b.

Fig. 9 XX93 for RE.316 (MODURES system).

Modes of operation (cont´d)

Fig. 10 316TSS01 for RE.316 (COMBIFLEX system).

Cable YX92
In order to facilitate the connection of periphery units to the XS92b we have the following cables:

YX92-1
For the connection of a printer to the XS92b (cable 2 m long, with 25-pin sub-D-connector at both ends).

YX92-2/YX92-4
For the connection of a PC to the XS92b (cable 2 m long, with 9-pin sub-D-connector for the connection to XS92b at one end and the standard 25-pin (YX92-2) or 9-pin (YX92-4) sub-D-connector at the other).

YX92-3
For the connection of ten digital inputs and one digital output between the control unit XC92 and ABB protection units type LZ96a, RE93 and YV96.

Test programs on diskette
The test programs which exist for the different types of relays are listed in the section Ordering.

Further programs on diskette
- The interface program XSCON converts disturbance recorder data (INDACTIC-65C, RE.316, RE.216, REOR) and COMTRADE into the XS92b format.
- RELTEST: basic test program which allows testing of protection with output of theoretical and measured values which can be fed by user-written programs for specific types of relay.
- R316 CFG: specific program for REL 316 for use in connection with RELTEST (conversion of setting files into test files).

Technical data

Table 2: General data

Supply voltage single-phase	115V/230 V, +15%/-15%, 50/560 Hz
Temperature range - within spec. - operational	 0 to + 45°C 0 to + 55°C
Safety Including dielectric test (1350 V / 50 Hz / 1 min.)	EN 61010-1/A2 1995, IEC 1010-1/A2 1995
Electromagnetic compatibility (EMC): **Emission** **Immunity** - Electrostatic discharge (ESD), 4/8 kV, contact/air - Fast transient (burst), 4/2 kV - Conducted electromagnetic field, 0.15 - 80 MHz, amplitude-modulated, 10 V - Radiated electromagnetic field: • 80 - 1000 MHz, amplitude-modulated 10 V/m • 900 MHz, keyed carrier, 10 V/m - 1 MHz burst, 2.5 kV	 EN 80082-2 / -1 (1994), CISPR 22 (1995), Cl. A, Cl. B with additional earthing of the case EN 80082 (only EN/ENV standards) EN 61000-4-2 (1994), IEC 1000-4-2 (1995), Cl. 2/3 EN 61000-4-4 (1994), IEC 1000-4-4 (1995), Cl. 4 ENV 50141 (1993), IEC 1000-4-6 (1996) ENV 50140 (1995), IEC 1000-4-3 (1995) ENV 50204 (1995) IEC 255-22-1 (1988), Cl. 3
Weights: - upper rack - lower rack - Supplementary rack	 8.5 kg without case 15 kg with case and accessories 10.2 kg without case 19 kg with case and accessories 11 kg without case 19.5 kg with case
Consumption Basic unit - at no load - at full load	 120 VA 1100 VA
Output ratings Voltage circuit	 25 VA/phase at 70 V 50 VA at 140 V (fault code 03) 20 VA in one phase at 220 V (fault code 01)
Current circuit	max. 100 VA/phase 15 A continuously, 20 A short
Interface Serial interface according to RS 232 C (24V) Three cores: RxD (receive); TxD (transmit); signal earth	
Installation For free installation, two separate 19" racks supplied in a case	

Table 3: Setting parameters

Parameters to be entered		**Code**	**Range**	**In(de)cre-ment**
Frequency	f	FR	40 to 70 Hz	0.01 Hz
Frequency slope Voltage	df/dt $U_{r.m.s.}$	DF U	0.4 to 5 Hz/s 0 to 70 V per phase up to 220 V in one phase	0.1 Hz/s 0.1 V
2 three-phase voltage systems (with ancillary rack)			0 to 70 V	0.1 V
Current For paralleling with current amplifiers	$I_{r.m.s.}$	I	0 to 20 A/phase 0 to 40 A	0.01 A 0.02 A
Phase angle UI	φ	PHI	0 to 359°	1°

Technical data (cont´d)

Line impedance	$\|Z_L\|$	ZL	0 to 99.99 Ω	0.01 Ω
Line impedance angle	φ_L	PZL	0 to 359°	1°
Zero-sequence compensation factor	k_{OL}	K0	0 to 5	0.1
Zero-sequence compensation angle	φk_{OL}	PKO	-180° to +90°	1°
Source impedance	$\|ZS\|$	ZS	0 to 220 Ω	0.1 Ω
Source impedance angle	φs	PZS	0 to 90°	1°
Zero-sequence comp. factor of source	$\|k_s\|$	KS	0 to 5	0.1
Zero-sequence comp. angle of source	φk_s	PKS	0 to 90°	1°
Duration of fault injection	t_f=TFxMT	TF MT	0 to 9999 ms 1, 10, 100	1 ms
Duration of pre-fault no-load voltage ($U = U_N$)	t_L	TL	t_B to 9999 ms[1]	1 ms
Duration of pre-fault no voltage ($U = U\varnothing$)	t_0	T0	t_B to 9999 ms[1]	1 ms
Harmonics, order	n	HAR	2nd to 9th	1
Harmonics, amplitude voltage	U_n	APU	0 to 50% of U_{eff}	1%
Harmonics, amplitude current	I_n	API	0 to 50% of I_{eff}	1%
Measurement signal output		SSI	0/100/110	
External start via “I_n10”		EXT	0/1	
Voltage steps	ΔU	DU	0.1 to 10 V	0.1 V
Current steps	ΔI	DI	0.01 to 1 A	0.01 A
Angular steps	$\Delta\varphi$	DPH	1 to 30°	1°
Angular steps	$\Delta\varphi_L$	DPL	1 to 30°	1°
Impedance steps	ΔZ_L	DZL	0.01 to 10 Ω	0.01 Ω
Frequency steps	Δf	DFR	0.01 to 1 Hz	0.01 Hz
Voltage step harmonics	ΔU_n	DHU	0.1 to 1%	0.1%
Voltage step harmonics	ΔI_n	DHI	0.1 to 1%	0.1%

[1] t_B is the time necessary for precalculating the next fault output (approx. 150 to 300 ms).

Table 4: Accuracy of test signals

Angles		+/- 0.5°
Voltage ranges	0.1 to 4.2 V 4.3 to 70 V	+/- 1% of setting or +/- 0.15% of full scale
Current ranges	0.01 to 1.3 V 1.31 to 20 V	+/- 1% of setting or +/- 0.15% of full scale
Frequency range	40 to 70 Hz	+/- 0.005 Hz
Time measurement	($t_F \leq 10s$) with MT = 10, 100	+/- 0.5 ms +/- 20 ms

Table 5: Modes of connection

MODURES or COMBIFLEX plug-in units can be tested on site, if fitted with test socket, by means of a test cable and plug. Direct connection of loose relay to banana sockets by means of jumpers.	
Digital inputs and outputs Inputs/outputs on XC92 Inputs (programmable for test stop): “Trip”- input Output Outputs on YU92a	 logical "1": 7 to + 250 V DC logical "0": 1 to - 250 V DC potentially-free make contact logical "1": 12 to 13 V; Ri = 2 kΩ logical "0": 0 to 0.5 V; Ri = 2 kΩ 6 potential-free contacts, freely programmable U_{max}: 250 A I_{max}: 0.5 A

Diagram

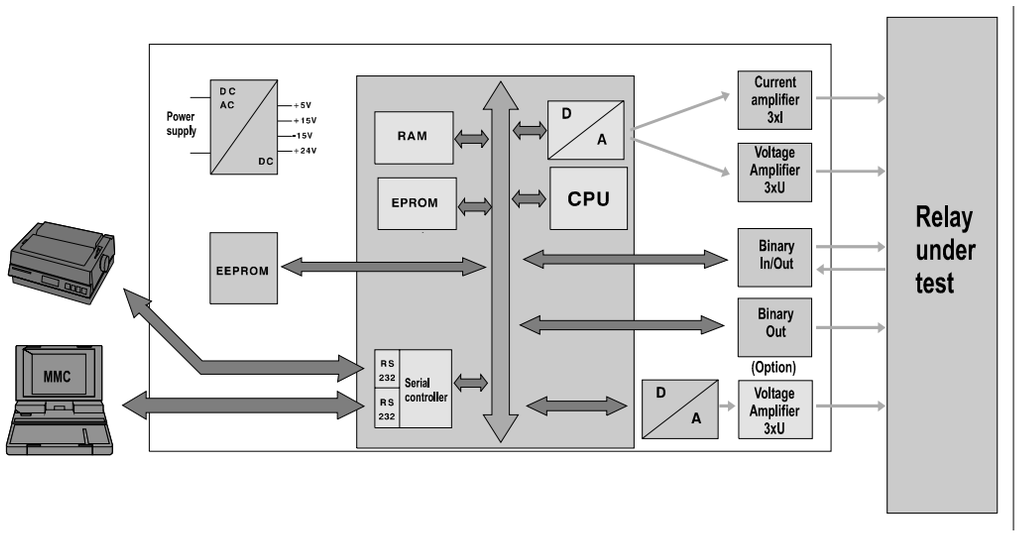

Fig. 11 Block diagram of test set XS92b.

Ordering

Table 6: Order numbers

XS92b, basic unit (rack 1 and 2)	HESG 448 717 R001, (XSWIN, YX92-4 and program RELTEST included)
Upgrade kit for XS92a already equipped with XC92-P2*	HESG 448 689 R0001 (XSWIN, YX92-4 and program RELTEST included)
Upgrade kit for XS92a without XC92-P2*	HESG 448 689 R0002 (XSWIN, YX92-4 and program RELTEST included)
Options	
Memory unit YS92 with 8 EEPROMS	HESG 440 667 R0101
Programs to load on YS92 (delivered on diskette): - for distance relays general - for line protection REL511 - for line protection REL316 (Unit 316XB61) - for distance relay LZ91 - for distance relay LZ92/LZ92-1, RAZOA - for distance relay LZ95 - for distance relay LZ96a - for distance relay LIZ6 - for distance relay LZ3/L3/LZ4 - for distance relay LI4 - for multifunctional relay MCX 912/913 - for frequency relay FCX103b - for frequency relay FC95/FCN950 - for generator protection relay GSX5	 HESG 448 407 R1; D, E, F HESG 448 407 R11; E HESG 441 964 M1; D, E, F HESG 448 407 R5; D, E, F HESG 448 407 R6; D, E, F HESG 448 407 R7; D, E, F HESG 448 407 R8; D, E, F HESG 448 407 R3; F HESG 448 407 R4; D, E, F HESG 448 407 R2; D, E, F HESG 448 407 R9; D, E HESG 448 407 R10; D, E HESG 448 407 R12 HESG 448 407 R13
Programs XSWIN - YB94-2 CD-ROM (The installation diskette can be produced from the CD-ROM)	HESG448 633 R0003
Interface-program (English, German, French), type XSCON to convert data from the fault recorder in COM-TRADE format (Indactic65-G, RE.316, RE.216, REOR)	HESG 448 772 R1; D, E, F can also be downloaded from www.abb.ch/chnet/xs92_faq/xs92_faq.htm

Diskette with programs Typ RELTEST and R316 CFG (unit 316XB62)		HESG 448 034 R0001
Diskette with specific fault sequences		on request
Test connector YX91: - YX91-4 for MODURES-units - YX91-6 for units with comb-type test connectors (e.g. for mech. distance relays) - YX91-7 with 4 mm banana pins at one end (can be used with COMBITEST)		 HESG 216 587 R4 HESG 216 587 R6 HESG 216 587 R7
Hand terminal YB92		HESG 222 142 R0012
Connectors: - YX92-1	 for printer connection	 HESG 441 258 R1
- YX92-2	for connection of an external computer/ terminal (25 pins)	HESG 441 258 R2
- YX92-3	for connection of the tripping logic unit of the distance relay LZ96a or RE93 to XC92 or for connection of YV96 to XC92	HESG 440 188 P1
- YX92-4	for connection of an external computer/ terminal (9 pins)	HESG 441 258 R4
- YV96	for LZ96 the ancillary connector YV96 and the measuring cable	HESG 441 414 R1
- YX92-3	for the connection of the individual units of the distance relay with XC92 must be ordered	
- YU92a	for the output of two variable phase voltages or a second voltage system and six signalling relays	HESG 448 517 R0101
- YU93	for the output of currents and voltages on measurement signal interfaces (U_N = 6.5 V; I_N = 125 mV)	HESG 448 788 R0001
- WI23Z/1A	Intermediate transformer in order to reduce the burden impedance for the current amplifier (one per current amplifier)	WZ 3100, 1KHF400906 P0004
- AD93	Control and voltage rack XS92b complete with carrying case incl. "XSWIN" and "RELTEST"	HESG 324 454 R0101
- AI93	Current amplifier rack XS92b complete with carrying case	HESG 324 440 R0101
Ancillary voltage amplifier rack for an additional three-phase voltage system (to test synchrocheck function, three-phase). The following items must be ordered in addition to the basic version: - One ancillary voltage amplifier rack		 HESG 440 437 R0004
Ordering example: - One test set XS92b - One memory unit YS92 with eight EEPROMs - One printer connection cable		 One rack HESG 324 454 R0101 One rack HESG 324 440 R0101 HESG 440 667 R101 HESG 441 258 R1

* (additional print for 3-phase current output)

Sample specification

Numerical test set for testing all kinds of protection relays, including distance, frequency, directional and power relays. All kinds of faults are to be simulated such that any protection relay can be tested close to actual system conditions.

One to three currents only, one to three voltages only, both currents and voltages, as well as impedances shall be the test quantities to be injected. One voltage output shall have a variable frequency of high resolution and an adjustable rate of change of frequency (df/dt). Phase angles are to be set from 0 to 360 degrees.

The implementation of optional test functions such as synchrocheck, etc. and programs such as user interface programs running on a PC, test programs for specific protection relays, etc. shall result in mainly software changes.

Communication with the test set shall be performed with either a PC or a hand terminal. Parameterizing the test set is to be performed by a user interface program. The user interface program, if running on a PC, is to be menu-driven and shall contain "Help Key" information that can always be called to explain individual setting parameters.

The test set is constructed such that the necessary hardware and software for additional test functions can be added at any time.

References

Description	CH-ES 24-11.20
Instructions for Installation and Operation	1MRB520014-Uen
Test program manuals	
- for line protection REL316	CH-ES 86-11.52
- for distance relay LZ91	CH-ES 86-11.30
- for distance relay LZ92/LZ92-1	CH-ES 86-11.31
- for distance relay LI4...	CH-ES 86-11.32
- for distance relay LZ3/L3/LZ4	CH-ES 86-11.33
- for distance relay LZ96A, LZ96	CH-ES 86-11.35
- for distance relay LIZ6	CH-ES 86-11.36
- for distance relay LZ95	CH-ES 86-11.37
- for distance relay general	CH-ES 86-11.34
- for multifunctional relay nX913/912	CH-ES 86.11.41
Interface-Program to convert data from fault recorders	CH-ES 86-11.53
R316 CFG + RELTEST	CH-ES 86-11.54
Internet page	www.abb.ch/chnet/xs92b.htm

ABB Power Automation AG
Haselstrasse 16/122
CH-5401 Baden/Switzerland
Tel. +41 56 205 77 44
Fax +41 56 205 55 77
Homepage: www.abb.ch/chpau

Printed in Switzerland (9910-1500-0)