August 99

11. Appendices

Fig. 11.1 Wiring diagram of the test plug YX91 and test socket XX91 11-2

Fig. 11.2 Main DC supply unit NN93 showing 1 A slow fuses 11-3

Fig. 11.3 1.6 A slow fuse and condensers requiring replacement on PCB E1 in the DC/DC converter NF92 11-3

Fig. 11.4 Connecting cable type YX92-1 (printer) 11-4

Fig. 11.5 Connecting cable type YX92-2 (computer terminal or external computer) 11-4

Fig. 11.6 Computer cable type YX92-4 (computer terminal or external computer) 11-4

Fig. 11.7 Component side of control unit XC92 showing the processor, RAM and the firmware EPROM's 11-5

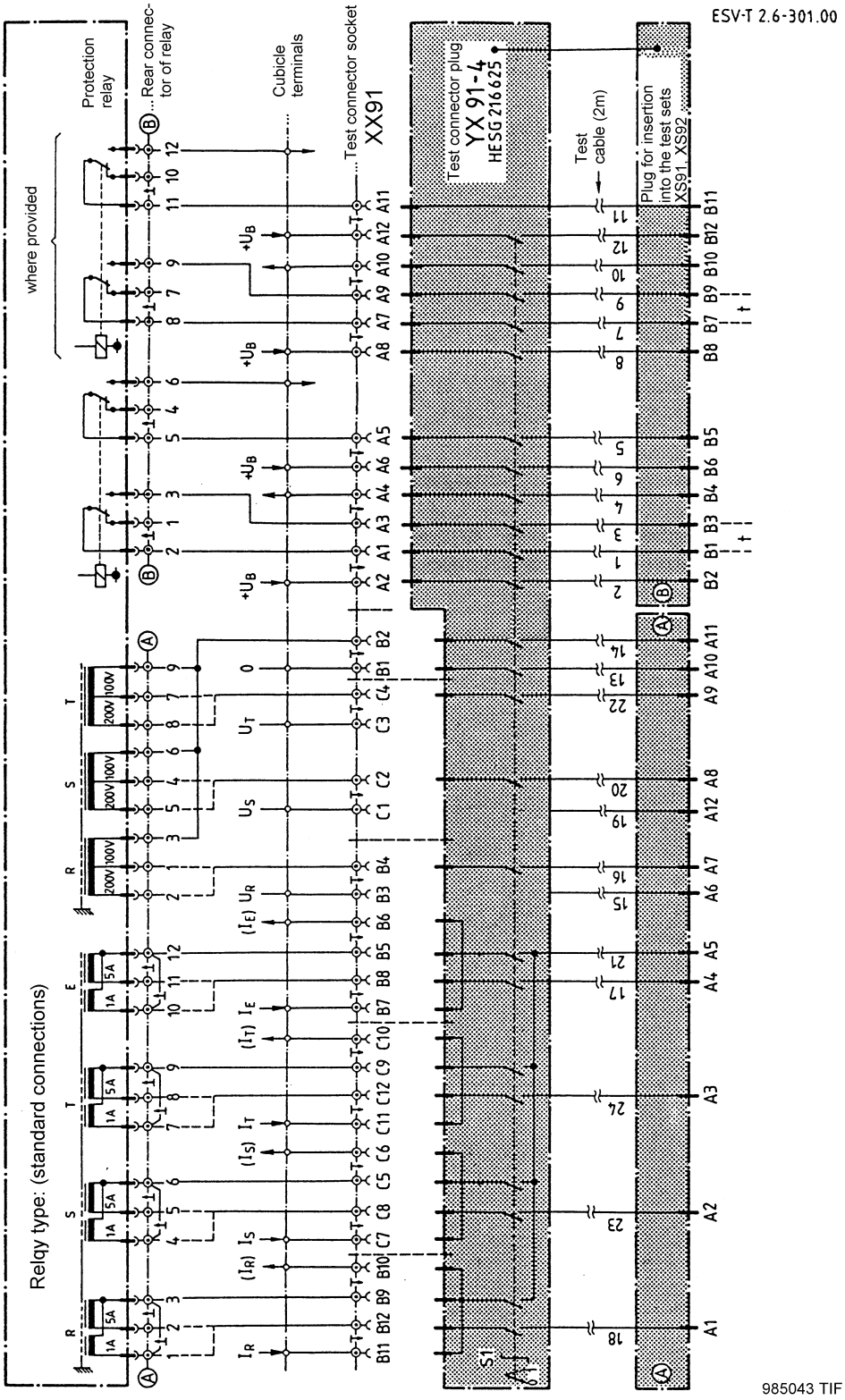

Fig. 11.1 Wiring diagram of the test plug YX91 and test socket XX91

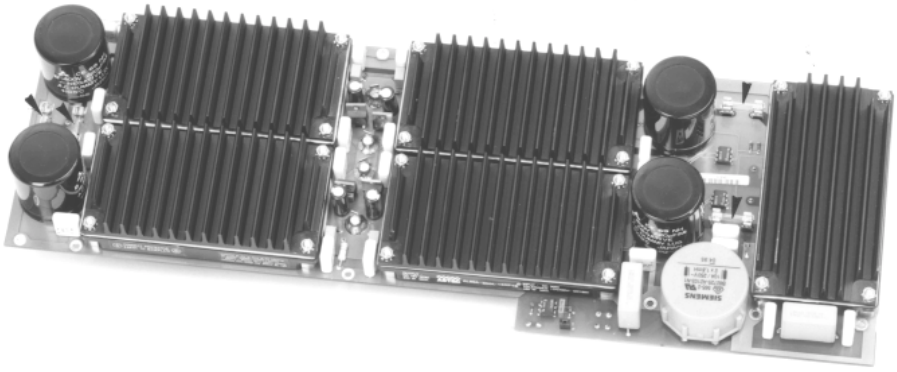

Fig. 11.2 Main DC supply unit NN93 showing 1 A slow fuses (258729)

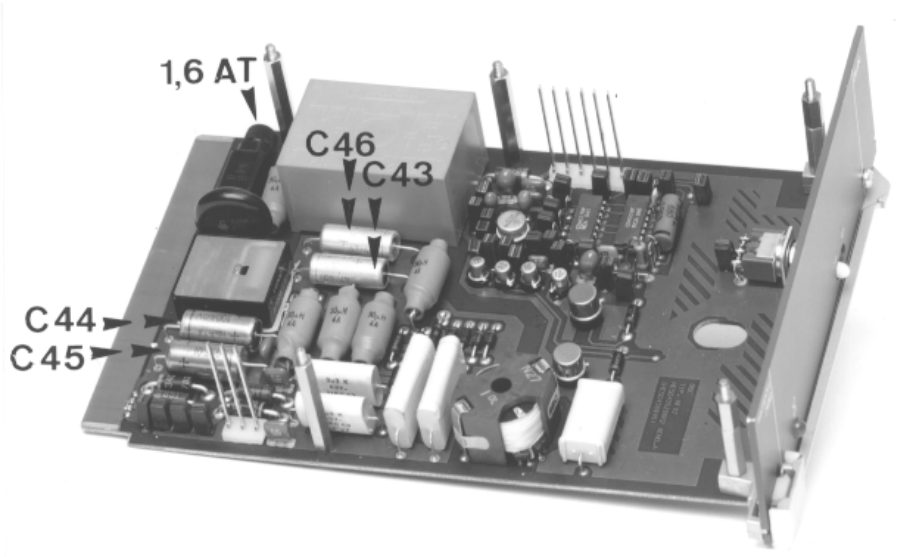

Fig. 11.3 1.6 A slow fuse and condensers requiring replacement on PCB E1 in the DC/DC converter NF92 (191874)

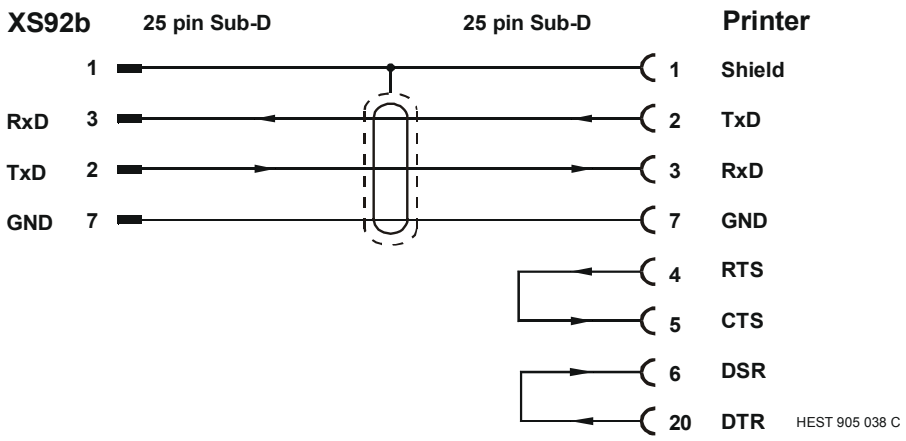

Fig. 11.4 Connecting cable type YX92-1 (printer)

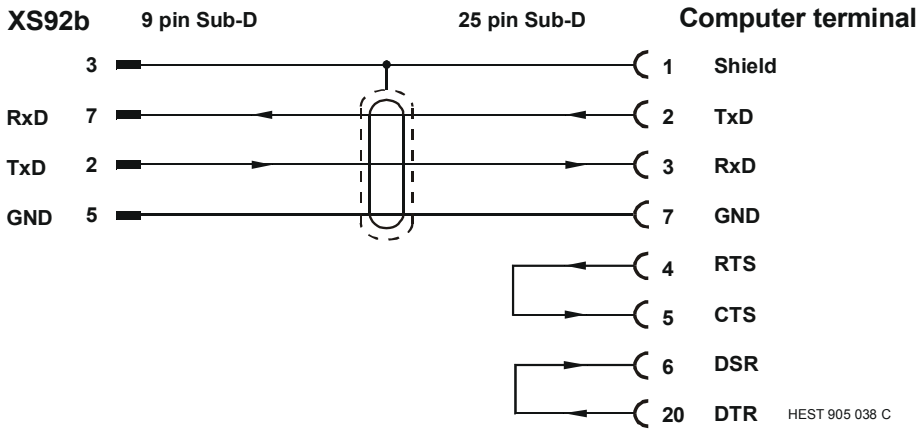

Fig. 11.5 Connecting cable type YX92-2
(computer terminal or external computer)

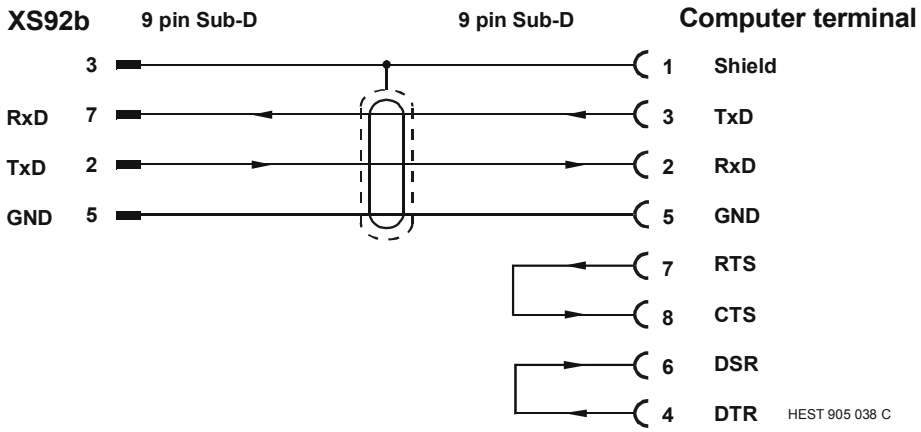

Fig. 11.6 Computer cable type YX92-4
(computer terminal or external computer)

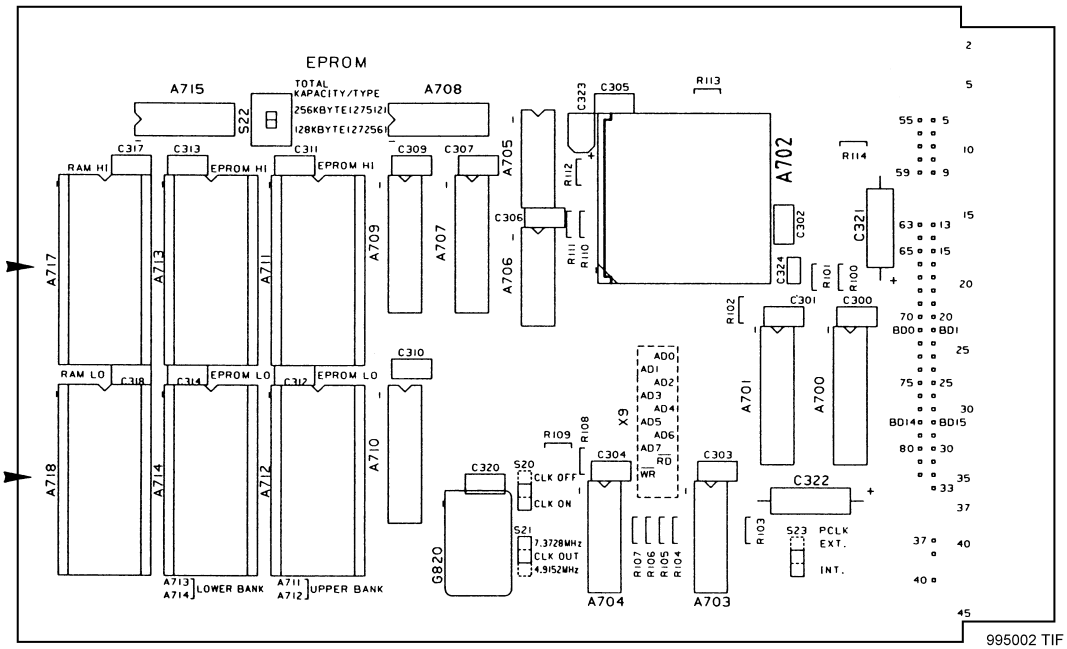

Fig. 11.7 Component side of control unit XC92 showing the processor, RAM and the firmware EPROM's