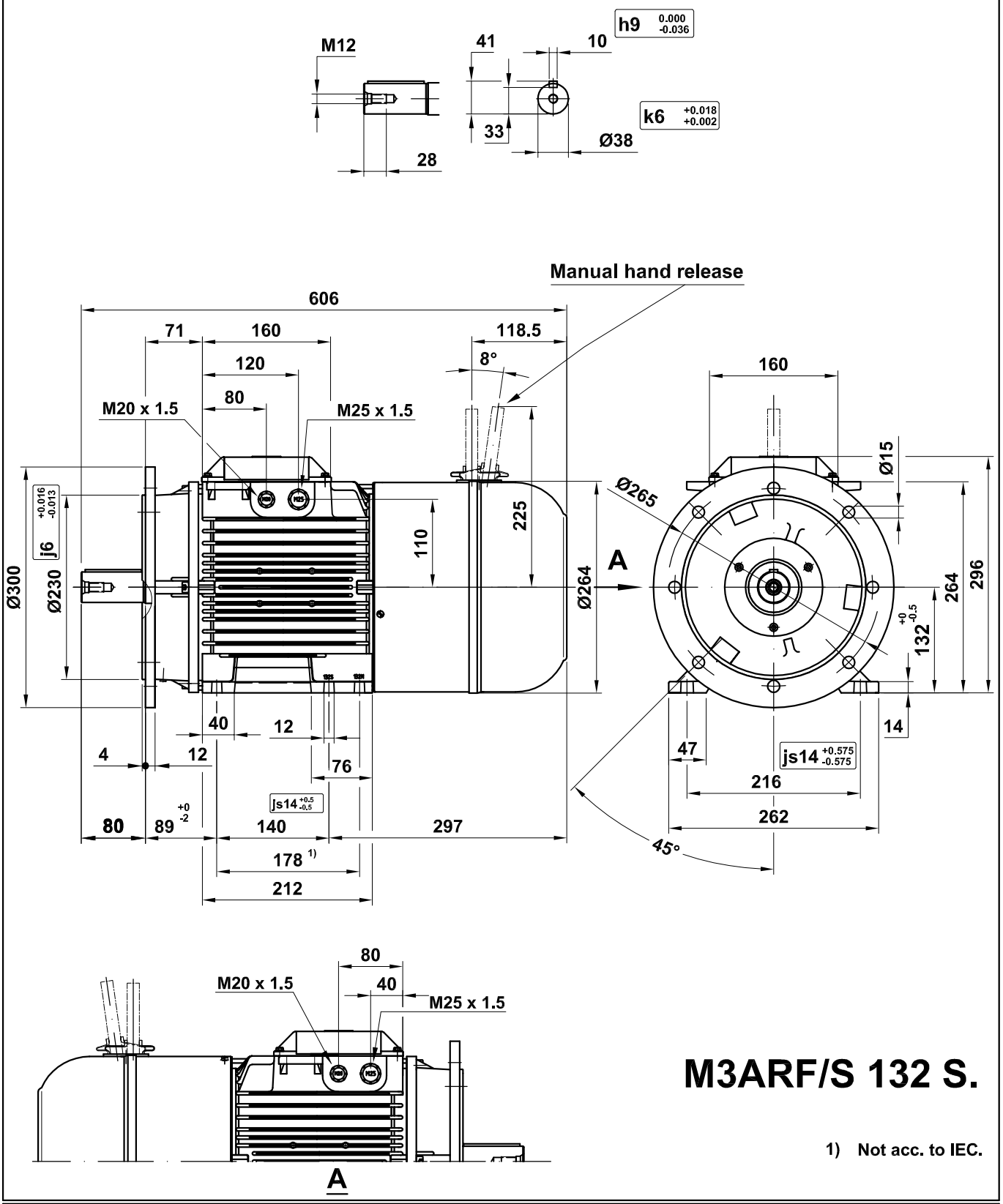

M3ARF/S 132 S.

1) Not acc. to IEC.

Motor Dimension Print	Motor Type : M3ARF/S 132 S.	Document N° : AE 4431 5138-303R

Description :

Brake motor foot & flange mounted / Motor freno con patas y brida IM2001

Unit : División Motores, Spain.	Issued by : IKM/ J.MUÑOZ	Replaces :
Date : 2005-07-05	Approved by : IKM/ G.BLANES	Replaced by :

ABB Automation Products, S.A.

Customer Reference :

ABB