Power[IT] Liquid Filled Three Phase Padmounted Transformers

45-3750 kVA

Industrial[IT]
enabled

ABB

Introduction to ABB

ABB is a global leader in power and automation technologies that enable utility and industry customers to improve their performance while lowering their environmental impact.

Distribution Transformers

ABB Distribution Transformers provide the most complete line of padmounted transformers to meet the applications of any distribution system. We are a dominant force in the industry. We lead the way with the introduction of new products and services for the ever-changing distribution transformer industry.

We can offer cost-effective solutions for power distribution. We support our industry with a commitment to product development. We utilize the latest manufacturing technology to maintain state-of-the-art quality and productivity. Large vertical integration allows us to ship high quality products in the shortest possible production cycle. We are in alliances with major utilities and businesses around the world providing products and services to meet all their needs.

ABB will continue to build on a heritage of quality, customer satisfaction and technology, and capitalize on its resources, to maintain its position as the number one supplier of transformers in the industry.

Industrial[IT]

Industrial[IT] is the ABB name for our commitment to real-time integrated solutions for power, automation, and information.

Our Quality Policy

Total customer satisfaction through continual process improvement.

Our Values

Our values guide us in how we go about meeting our vision and mission.

Customer Success – We seek to provide solutions for mutual competitive advantage. We set the highest standards for quality, meet delivery commitments and provide high value.

Quality Excellence – We want to be recognized as a company that exceeds our customers' expectations.

ABB Quality Strategy

Start with a focus on the customer.

Measure what is important.

Define a benchmark for "highest standard for quality."

Have a means to dramatically improve performance against the benchmark.

Three Phase Padmounted Transformers

The ABB MTR is an oil-filled, three-phase, commercial padmounted distribution transformer specifically designed for servicing such underground distribution loads as shopping centers, schools, institutions and industrial plants. It is available in both live front and dead front construction, for radial or loop feed applications, with or without taps.

ABB MTR meets the following industry standards:

ANSI C57.12.00	ANSI C57.12.80
ANSI C57.12.22	ANSI C57.12.90
ANSI C57.12.26	ANSI C57.91
ANSI C57.12.28	NEMA TR1
ANSI C57.12.29	WUG 2.13 Rev. 4
ANSI C57.12.70	

Ratings:

- 45 through 3750 kVA
- 65° C average winding rise
- 60 hertz standard, 50 hertz optional

45-1500 kVA

- High voltages: 4160 Grd Y/2400 through 34,500 Grd Y/19,920 for Grounded Wye systems; 2400 through 34,500 for Delta systems; various dual high voltages

2000-3750 kVA

- High voltages: 7200 Grd Y/4160 through 34,500 Grd Y/19,920 for Grounded Wye systems; 4160 through 34,500 for Delta systems; various dual high voltages
- Taps: All voltages are available with or without taps
- Insulation classes: 35 kV, 150 kV BIL and below

45-1500 kVA

- Low voltages: 208Y/120, 216Y/125, 460Y/265, 480Y/277, 480Δ, 240Δ and 240Δ with 120 volt mid-tap in one phase; (4160Y/2400, 4160Δ, 2400Δ , 2400/4160Y/2400 for 500 kVA and larger)

2000-3750 kVA

- Low voltages: 460Y/265, 480Y/277, 480Δ, 4160Y/2400, 2400Δ, 2400/4160Y/2400

Standard Features:

1. Four lifting lugs.
2. Bolted-on terminal compartment (18" or 24" deep depending on KVA) with removable front sill.
3. Hinged, lift-off cabinet doors.
4. Interlocked penta-head bolt/padlock handle operates a cam assembly which is part of the 3-point door latching mechanism. (A hex-head bolt is available.)
5. For live front construction, externally clamped high voltage porcelain bushings with a single eyebolt, clamp-type connector (accommodates #6 AWG solid to 250 MCM stranded conductors).
6. For dead front construction, externally clamped high voltage bushing wells for loadbreak or non-loadbreak inserts.
7. Lightning arrester mounting pads (live front only).
8. Tank ground pads (1 in HV, 1 in LV).
9. Steel high/low voltage compartment barrier.
10. One 1/2" penta-head bolt must be removed from the flange formed on the steel high/low barrier before the HV door can be opened (1/2" hex-head bolt available as an option).
11. Externally clamped low voltage bushings with threaded copper stud for full load current below 2100 amps. Externally clamped integral low voltage bushings for current above 2100 amps. NEMA spades provided per ANSI hole requirements.
12. Nameplate.
13. Fill plug and self-actuating pressure relief device.
14. Drain plug.
15. Removable neutral ground strap.
16. Five-legged core/coil assembly.
17. Handhole cover bolted onto tank top (protected by weathercover).
18. Panel-type coolers.
19. NEMA safety labels.
20. The paint finish process applies a durable, corrosion resistant finish to the product. The finish meets or exceeds all the performance requirements of ANSI C57.12.28. The multi-step process includes an epoxy primer uniformly applied by cationic electrodeposition and a urethane top coat.

Optional Features:

Primary Termination

- Externally-clamped bushing wells with loadbreak or non-loadbreak inserts.
- Integral loadbreak bushings.

Secondary Termination

- Externally-clamped bushings with NEMA 6-hole, 8-hole, 10-hole, or 12-hole spades.
- Spade supports are available. They are provided for 8-hole spades and larger when the current is 1400 amps or greater.

Primary Switching

- LBOR oil switch: one for radial, two for loop feed.
- Externally-operated tap changer.
- Externally-operated dual voltage switch.
- Externally-operated delta-wye switch.

Overcurrent Protection

- Internal primary protective links.
- Bayonet-type expulsion fuses.
- Drawout, loadbreak current limiting fuses, with or without interlocking transformer switch.
- Secondary oil circuit breaker.
- Internal, partial-range current limiting fuses.

Overvoltage Protection

- Distribution class, metal oxide arresters, 3-36 kV.
- Distribution class, valve-type lightning arresters, 3-27 kV.

Construction Options

- 18", 24" and 30" deep terminal cabinet.
- Drain valve and sampling device.
- Mounting plate for CT's or PT's.
- Interphase barriers.
- Molded case external secondary breaker.
- Substation Accessories – Oil gauge, thermometer, drain valve and sampler, pressure-vacuum gauge provision.
- Weathercover.
  - Transformers may feature an optional weathercover over the cabinet which is hinged to allow clearance for replacement of the bayonet-type fuses.
  - The weathercover can be lifted easily into place and secured with a single supporting arm.
  - The weathercover requires no additional holddown hardware.

Some optional features are not available on larger kVA units.

Live Front, Radial Feed

ANSI Fig. 1, 2, and 3 (C57.12.22)

KVA	A	B	C	D	E	Wt.	Gal. of Oil
75	54.5	56	44.8	44.8	56	2280	115
112	54.5	56	44.8	44.8	56	2400	115
150	54.5	56	44.8	44.8	56	2700	125
225	54.5	56	49.8	46.8	56	3350	150
300	54.5	60	50.8	46.8	56	3650	165
500	58.5	66	58.8	48.8	56	5200	200
750	66.5	81	60.8	50.8	66	7100	270
1000	66.5	84	62.8	52.8	66	7900	320
1500	66.5	86	66.8	54.8	66	9700	390
2000	70.5	92	68.8	58.8	70	12800	430
2500	70.5	98	70.8	58.8	70	14100	500
3000	Contact Factory						
3750	Contact Factory						

Design Dimensions:

Approximate weights and dimensions: Dimensions are in inches, weights are in pounds. Dimensions may change to meet the customer spec.

Dead Front, Radial Feed

ANSI Fig. 1, 3, and 4 (C57.12.26)

KVA	A	B	C	D	E	Wt.	Gal. of Oil
75	46.5	62	44.8	44.8	62	2350	115
112	46.5	62	44.8	44.8	62	2450	115
150	46.5	62	44.8	44.8	62	2700	125
225	46.5	62	49.8	46.8	62	3400	150
300	46.5	62	50.8	46.8	62	3700	165
500	54.5	66	58.8	48.8	62	5400	200
750	58.5	81	60.8	50.8	66	7100	270
1000	66.5	84	62.8	52.8	66	7900	320
1500	66.5	86	66.8	54.8	66	9700	390
2000	70.5	92	68.8	58.8	70	12800	430
2500	70.5	98	70.8	58.8	70	14100	500
3000	Contact Factory						
3750	Contact Factory						

Dead Front, Loop Feed

ANSI Fig. 2, 3, and 4 (C57.12.26)

KVA	A	B	C	D	E	Wt.	Gal. of Oil
75	54.5	66	44.8	44.8	66	2400	120
112	54.5	66	44.8	44.8	66	2500	120
150	54.5	66	44.8	44.8	66	2800	130
225	54.5	66	49.8	46.8	66	3500	160
300	54.5	66	50.8	46.8	66	3800	170
500	54.5	68	58.8	48.8	66	5600	200
750	66.5	82	60.8	50.8	70	7400	270
1000	66.5	86	62.8	52.8	70	8200	320
1500	66.5	88	66.8	54.8	70	10300	390
2000	70.5	92	68.8	58.8	70	12800	430
2500	70.5	98	70.8	58.8	70	14100	500
3000	Contact Factory						
3750	Contact Factory						

Top View

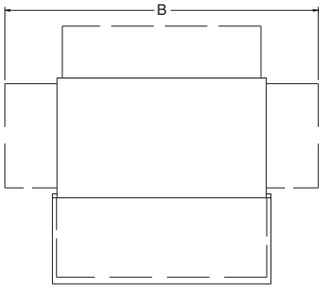

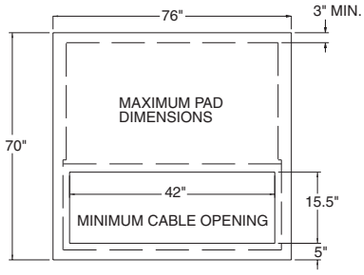

Front View

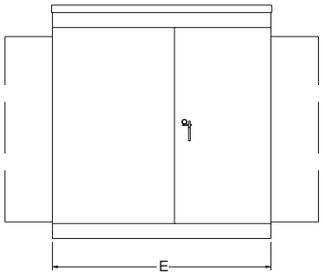

Side View

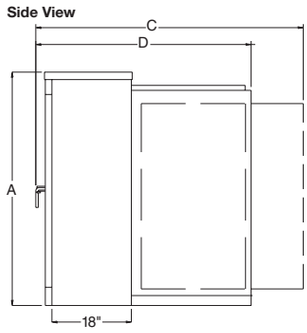

Fliptop Cabinet Design

We offer a fliptop air enclosure for three phase padmounted transformers. It is designed to improve operation and to better withstand its outdoor environment. New manufacturing equipment has allowed ABB to fabricate a "fliptop" cabinet design to better serve the needs of our customers. Material choices consist of both carbon steel and stainless steel.

The improvement features of the new cabinet design include:

- One piece "sloped" cabinet weather cover. The cabinet weather cover has a four degree sloped surface to shed all moisture to the rear of the transformer.
- Both the handhole weather cover and the full tank weather cover have a four degree sloped surface to shed water. The full tank weather cover option extends beyond the rear of the transformer to insure all moisture is directed away from the top of the tank.
- The cabinet weather cover support arm is free floating and locks into place automatically. This allows the linemen to use both hands when raising the cover. No reaching into the compartment is necessary to secure the cover in place.
- The cabinet weather cover can be rotated beyond center or easily removed for better access into the the cabinet compartment. The capability of "pulling" cables from above was a feature requested by utilities.

Support Arm Locking Mechanism

- The interface between the sidewalls and the cabinet weather cover has been redesigned to better receive the weather cover when closed. This new interface minimizes surface contact to prevent the rubbing of paint.

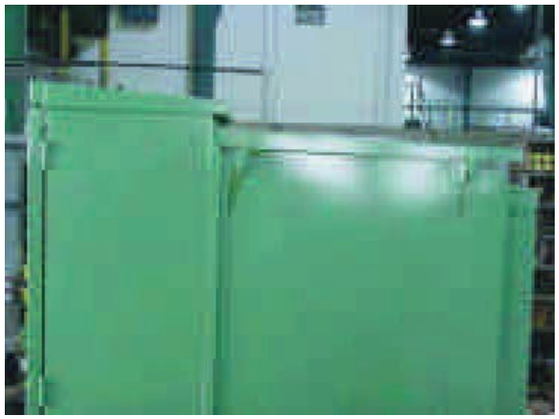

Sloped Tank and Cabinet Weather Cover

This cabinet design has successfully passed all industry tamper resistance requirements. Using Guidelines for Testing Enclosure Integrity, the design passed pry tests, pull tests, wire probe tests, deflection tests, and the operation test. The tests performed confirm that the cabinet meets the tamper resistance requirements of ANSI C57.12.28 at both 0 and 15 psig, as well as ANSI C57.12.22.1989 and ANSI C57.12.26.1992 demonstrating sufficient strength to withstand an internal static pressure of 7 psig without permanent distortion and 15 psig without rupturing or displacing components of the transformer or affecting cabinet security.

MTP Mini-Three Phase Padmounted Transformer

The Mini-Three Phase Padmounted Transformer (MTP) is designed for the needs of utility customers to reduce costs and improve aesthetics. The design is easier to handle, install and maintain. The discreet profile of the MTP is ideal for commercial applications such as banks, stores and restaurants.

The MTP features a hood and removable sill instead of doors. The design allows easy access for installation and maintenance of the transformer.

The ABB MTP meets the following industry standards:

ANSI C57.12.00	NEMA TR-1
ANSI C57.12.26	ANSI C57.12.28
ANSI C57.12.29	WUG 2.13, Rev. 4
ANSI C57.12.70	ANSI C57.91
ANSI C57.12.80	ANSI C57.12.90

Ratings @ 65º C Rise:

KVA: 45-150 kVA
HV: 4160GY/2400 through 24940Y/14400VΔ at 95 BIL spacing only, 2400Δ through 14400Δ at 95 BIL spacing only
BIL: 60, 75, 95 kV
LV: 208Y/120, 216Y/125, 460Y/265, 480Y/277, 480Δ, 240Δ and 240Δ with 120 volt mid-tap in one phase
60 hertz standard, 50 hertz optional

Standard Features:

1. A flip-top hood and heavy duty 3/8", removable stainless steel hinge pins provide safe and durable service.
2. A recessed locking assembly with padlock provisions and a penta-head locking bolt is standard for tamper-resistant operation. A hex-head locking bolt is available.
3. All tanks are constructed of heavy gauge steel. Tank seams are welded and each unit is pressure tested and inspected for leaks prior to shipment.
4. The front sill latches with the flip-top hood, is attached on the side of the tank and is removable.
5. The high voltage universal bushing wells are externally clamped and removable. A parking stand between the bushing wells is provided for attachment of bushing accessories.
6. Externally clamped low voltage bushings.
7. Loop or radial feed, dead front only for high voltage configurations. Loop pattern will be loop "V" with minimum dimensions per ANSI C57.12.26, Fig. 2 at 8.3/14.4 kV. Radial pattern will be either horizontal with minimum dimensions per ANSI C57.12.26, Fig. 1 or a non-ANSI slant pattern.
8. Standard low voltage pattern is the staggered arrangement per ANSI C57.12.26, Fig. 4a with minimum dimensions.
9. Cabinet depth is standardized to be 19 inches.
10. Tamper-resistant design that exceeds ANSI C57.12.28.
11. NEMA safety labels.
12. Nameplate.
13. Five legged core/coil assembly.
14. The paint finish process applies a durable, corrosion resistant finish to the product. The finish meets or exceeds all the performance requirements of ANSI C57.12.28. The multi-step process includes an epoxy primer uniformly applied by cationic electrodeposition and a urethane top coat.

Optional Accessories:

1. Standard fusing is bayonet with or without under oil partial range current limiting fusing.
2. Taps or delta x wye or dual voltage are available, but not combined with each other.
3. One loadbreak oil switch is possible.
4. A live HO bushing is possible in the high voltage compartment.
5. A high-low barrier will be either metal or glasspoly.
6. Stainless steel designs, including the Mini-Skirt, are available.
7. Full range general-purpose current limiting fuses in dry well canisters will only be available in radial units with single fuse application.
8. Special slant low voltage pattern available upon request. This feature allows more space to mount metering current transformers.
9. Substation accessories available (normally in the low voltage compartment).

Minimum/Maximum Design Dimensions
(Actual dimensions will vary according to voltage, loss evaluation, and accessories.)

MTP	A	B	C	D	Wt.
Min.	36	44	51.5	19.25	1750
Max.	42	44	57.5	19.25	2500

Design Dimensions:
Physical data is approximate and is based on single voltage units with or without taps, with standard 19.25" cable compartment depth. Dimensions are in inches. Weights are in pounds. Dimensions may change to meet specific customer requirements.

Recommended Pad Dimensions

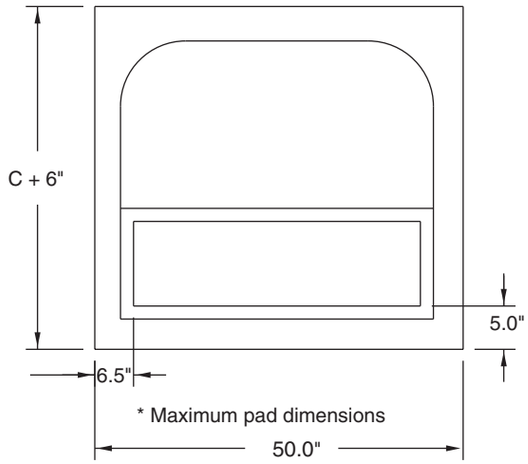

Front View

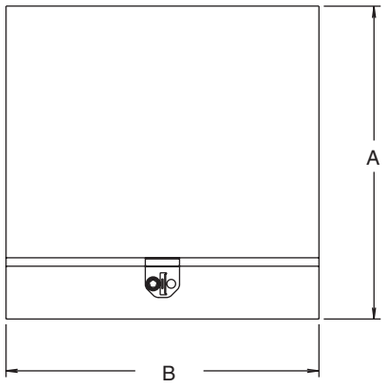

Side View

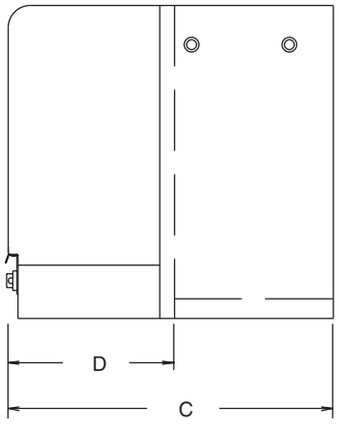

Distribution Transformer Testing

The ABB commitment to manufacture quality distribution transformers is backed by a series of transformer tests used to verify conformance to performance characteristics outlined in the latest revisions of ANSI C57.12.00 and ANSI C57.12.90. These identified tests are also part of the Quality System which is audited semi-annually by DET NOSKE VERITAS (DNV) to ISO Standards.

Testing Program

Factory tests are performed on a transformer to confirm that it is properly designed and constructed to carry rated load and that it will withstand the conditions it will be exposed to in service.

Each transformer manufactured by ABB must undergo a series of tests.

1. Polarity, Phase-Relation, and Ratio
2. Demag Test
3. Applied Voltage Test of the HV
4. Applied Voltage Test of the LV
5. Induced Voltage Test
6. No-Load (Excitation) Loss and Excitation Current
7. Impedance Voltage and Load Loss
8. Full Wave Impulse
9. Continuity Check

Test Facilities

The multi-station, automated test facilities are operated by process control computers. Required interaction with test floor personnel is minimal with the computers initiating and monitoring each test, and then analyzing the test results feedback. The computers are programmed to conduct tests according to ANSI standards, and according to the ratings of each transformer style, the test floor computers will initiate appropriate test setups, compare results with established ANSI standard limits, and determine acceptance for each tested unit.

The test results for each unit are recorded and stored on computer files for access and analysis.

Polarity, Phase-Relation, and Ratio Tests

These tests verify proper phase-relation (three phase), ratio, and polarity (single phase) of the transformer under test. To pass, a unit must demonstrate the proper polarity or phase-relation and have a turns ratio within one-half of one percent of the nominal voltage ratio.

Demag Test

Some transformers require the Demag Test to remove any residual magnetism in preparation for an impulse test. It also serves as a no-load exciting current test. A transformer passes this test if the exciting current does not exceed the limit specified for the design of the transformer.

Applied Voltage Test of the HV

This test checks the dielectric integrity of insulation structures between the high voltage and low voltage, and between the high voltage and ground. A pass/fail decision is made by monitoring the test current intensity. If the resulting current is larger than specified normal leakage and capacitive currents, the unit is rejected. This test is omitted for transformers with a permanently grounded high voltage winding.

Applied Voltage Test of LV

This dielectric test is similar to the Applied Voltage test of the high voltage circuitry except that the integrity of insulation structures between the low voltage and the high voltage, and between the low voltage and ground is checked. A pass-fail decision is made by monitoring the test current intensity. If the resulting current is larger than specified normal leakage and capacitive current, the unit is rejected.

Induced Voltage Test

The principal purpose of this test is to verify the dielectric strength of turn to turn, layer to layer, phase to phase, and other insulation structures within the transformer windings by inducing an overvoltage condition (at higher than normal frequency to avoid saturation of the core). The test current is monitored, and if it exceeds limits specified for each transformer, the unit is rejected.

No-Load Loss and Excitation Current

This test measures the no-load (excitation) loss and the transformer exciting current with rated voltage applied. If the exciting current and/or the no-load loss exceed the limits specified, the transformer is rejected.

Impedance Voltage and Load Loss

This test measures the load loss and the impedance voltage at rated current. The load loss and the impedance voltage must be within specified limits.

Full Wave Impulse

The impulse test is one of several tests designed to verify the dielectric strength of the many insulation structures within the distribution transformer against line voltage surges. It is performed to comply with ANSI standards and for quality assurance. The change in the ANSI standard in 1993 required all manufacturers to install fault detection sensitive enough to detect a single turn short.

Continuity Check

This test is performed on all transformers to verify transformer circuit and component integrity. This test is performed with an ohmmeter to verify that the internal wiring is correct.

The transformer's nameplate is compared to manufacturing information for style, serial number, kVA, HV rating, LV rating, tap voltages, impedance, conductor materials and coil BIL rating. The bushings, electrical accessories, and fuses are verified.

Special Tests

Some tests are performed at the option of the customer.

Sound Testing

ANSI standards define the required sound levels for transformer but some customers specify reduced sound levels. The sound generated by a transformer is affected by the core geometry, flux density, tank design, and the quality of assembly of all the transformer components into a completed unit. Sound tests are made with the unit powered at 100% and 110% of rated voltage under no-load conditions.

Temperature Tests

Core losses and coil losses are the primary sources of heating within the transformer. Our transformers are guaranteed to have an average coil winding temperature of no more than 65° C rise over ambient air temperature when operated at rated voltage and load conditions.

The temperature test is performed to determine the thermal characteristics of the transformer and to verify that they are within design limits.

Calibration

Test equipment is calibrated on a scheduled basis by trained technicians. Calibration records are maintained in accordance with the Quality System procedures. These are audited semi-annually by DNV in accordance with ISO Standards.

Short Circuit Withstand Capabilities

Distribution transformers are subjected to external short circuits on the secondary side. Such external faults can develop on the service line, in the house wiring or in connected loads due to numerous environmental reasons. These faults can be line-to-ground, double line-to-ground or line-to-line.

To meet these operating conditions, the American National Standard Institute (ANSI) has set standards concerning short circuit withstand capability. These standards require that distribution transformers shall be designed and constructed to withstand the mechanical and thermal stresses produced by these external short circuits.

The current standards relating to short circuit strength are ANSI C57.12.00 which sets the short circuit withstand requirements for distribution transformers and ANSI C57.12.90 which provides procedures for short circuit testing.

For distribution transformers, the magnitude of the short circuit current, the numbers of short-circuit tests and the duration of each short circuit test are defined by ANSI standards as follows.

A. Magnitude

Category	Single Phase kVA	Three Phase kVA	Withstand Capability*
I	5-25	15-75	40
	37.5-100	112.5-300	35
	167-500	500	25
II		750-2500	$1/Z_{T**}$

*Base current (Symmetrical) per unit for all distribution transformers with secondary rated 600 V and below.
**The short circuit current will be limited by the transformer impedance only.

B. Number of Tests
Each phase of the transformer shall be subjected to a total of six tests, four with symmetrical fault currents and two with asymmetrical fault currents.

C. Duration of Short Circuit Tests
When short circuit tests are performed the duration of each test shall be 0.25 s except that one test satisfying the symmetrical current requirement shall be made for a longer duration on distribution transformers. The duration of the long test in each case shall be as follows:

Category I:

$$T=1250/I^2$$

Where T is the duration in seconds,

And $I=I_{sc}/I_R$=symmetrical short circuit current, in multiples of normal base current except I shall not exceed the maximum symmetrical current magnitudes listed in A.

Where $I_{sc}=I_R Z_T$=symmetrical short circuit current, in rms amperes

I_R=rated current on the given tap connection, in rms amperes

Z_T=transformer impedance on the given tap connection in per unit on the same apparent power base as I_R

Category II:

$$T=1.0 \text{ second}$$

Criteria of Satisfactory Performance
According to ANSI Standards a unit is considered to have passed the test if it passes a visual inspection and dielectric tests. Recommended additional checks include examination of wave shape of terminal voltage and current, leakage impedance measurement and excitation current test. (Refer to ANSI C57.12.90.)

The standard allows the following variations in the leakage impedance:

Z_T (Per Units)	Percentage Variation
0.0299 or less	22.5-500 (Z_T)
0.0300 or more	7.5

Z_T=per unit impedance of the transformer

Paint Finish Process

ABB utilizes a multi-step process to apply a corrosion resistant finish to transformers. The materials and processes used are designed to protect against the effects of abrasion, sunlight, rural and industrial atmospheres, and humidity. Each carefully controlled process step has a specific purpose, and each step builds on the previous steps to form the complete protection system that ensures that our transformers meet ANSI functional paint specification guidelines.

Paint Process Procedure

Transformer parts receive the following steps of surface preparation prior to painting.

1. Shotblast: All parts are centrifugally blast cleaned to remove welding by-products and provide a uniform surface profile for better, more consistent adhesion and corrosion protection.
2. Alkaline wash cleaner: Removes mill oils, drawing oils, and shop soils that could interfere with good adhesion.
3. Water rinse.
4. Zinc phosphate coating: Provides a firm anchor for good paint adhesion and provides resistance to underfilm corrosion should the paint film be damaged, exposing bare metal.
5. Water rinse.
6. Deionized water rinse: Removes any ionic contamination to prepare for first application of paint.

This entire cleaning and pretreating process is automatic and conveyorized with all chemicals applied by spray.

The pretreatment system combines the latest in cleaning technology such as DI rinses and zinc phosphate over shotblasting in a tried and true format to provide the best possible pretreatment before paint is applied.

One of the keys to effectiveness of the ABB paint finish system is the primer. The green epoxy primer is applied by cationic electrodeposition – a dip process in which positively charged primer particles are attracted to grounded parts (cathodes). This method applies a very uniform, pinhole-free coating which penetrates and thoroughly coats all parts. This is a highly effective process for coating parts with difficult geometry. The process utilizes practically 100% of the primer paint, and since the primer is water borne OSHA and EPA emission standards are met. The primer is free of lead and chrome. After rinsing, parts are cured in an oven in preparation for the next step.

After the transformer is assembled, a final coating of two-component urethane paint is spray applied for color and additional film build. The final coat provides the weatherability necessary to protect the unit from sunlight and maintain its appearance.

Summary

The ABB paint system utilizes advanced techniques and materials to provide a superior finish system on pad-mounted distribution transformers. Each step in the process is specifically designed to maximize finish performance while minimizing waste to provide the best possible combination of performance and cost.

Paint Finish Specifications and Test Results

Parameter	Test Method	Specification	Typical ABB Value
Total exterior film build	Elcometer 256NF	3.0 mil min.	3.5 mils
Salt fog 1500 hrs.	ASTM B117	6 rating per ASTM D1654, no blisters	7 rating per ASTM D1654, no blisters
Adhesion	ASTM D3359 Method A or B	100%	100%
Humidity 1000 hrs.	ASTM D4585 @45c	No blisters, 1 pencil hardness	No blisters, no softening
Impact, 80 InLb	ASTM D2794/ ASTM B117	No red rust after 24 hrs.	No red rust after 24 hrs.
Oil resistance	Immerse in 100c Oil for 72 hrs.	No loss of adhesion, no blisters	No loss of adhesion, no blisters
QUV, 500 hrs.	ASTM G53/D523	50% loss of gloss, no cracks, no crazing	40% loss of gloss, no cracks, no crazing
Abrasion, 3000 cycles	ASTM D4060 24 hrs.	No red rust after 24 hrs.	No red rust after
Gravelometer, 60 PSI	ASTM 3170/ SAE J400	After 24 hrs. red rust in chips to not exceed 4B rating	No red rust in chips
QUV/SCAB, 15 cycles	ASTM G53	6 rating per ASTM D1654, no blisters	7 rating per ASTM D1654, no blisters
Paint meets or exceeds ANSI C57.12.28, C57.12.29 and EEMAC Y1-2, Canadian Standard.			

ABB Inc.
Distribution Transformers
500 West Highway 94
Jefferson City, MO 65101
Phone 573-634-2111
Fax 573-659-6275
e-mail:
www.abb.com/distributiontransformers

1LUU460300-LTE

ISO Certified
July, 2003