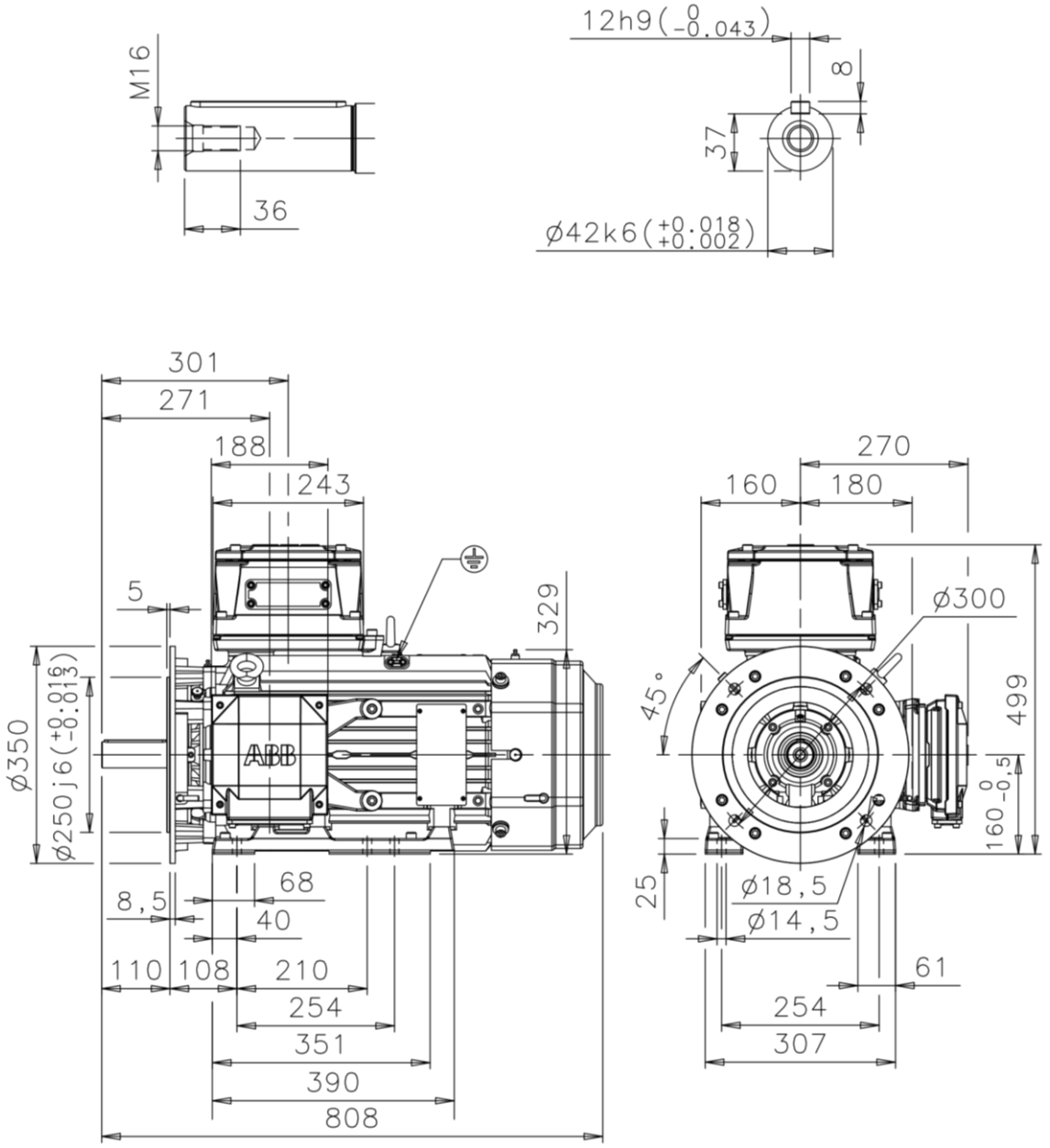


Additional information:

| | | |
|---|---|---|
| **Dimension Print** | Motor Type: M3KP/HP/GP(H) 160ML_2-12 B35, V36 | Document No: 3GZF500116-55 B<br>14 KP 160 A |
| Description: SQUIRREL CAGE MOTOR, AUXILIARY TERMINAL BOX RHS | | |

| | | | | |
|---|---|---|---|---|
| Unit: | Motors and Generators | Issued by: | J.Hietala | Replaces: |
| Date: | 4.6.2015 | Approved by: | J.Suopuro | Replaced by: |

| | | |
|---|---|---|
| **ABB Oy** | Customer Reference: | ABB |