Doc. N.° 1SDH001400R0903 - L9769

SACE Emax 2

Calotta accessori - E2.2-E4.2-E6.2
Accessories cover - E2.2-E4.2-E6.2
Schirmen zubehör - E2.2-E4.2-E6.2
Bouclier de accessoires - E2.2-E4.2-E6.2
Escudo de accesorios - E2.2-E4.2-E6.2

E2.2-E4.2-E6.2

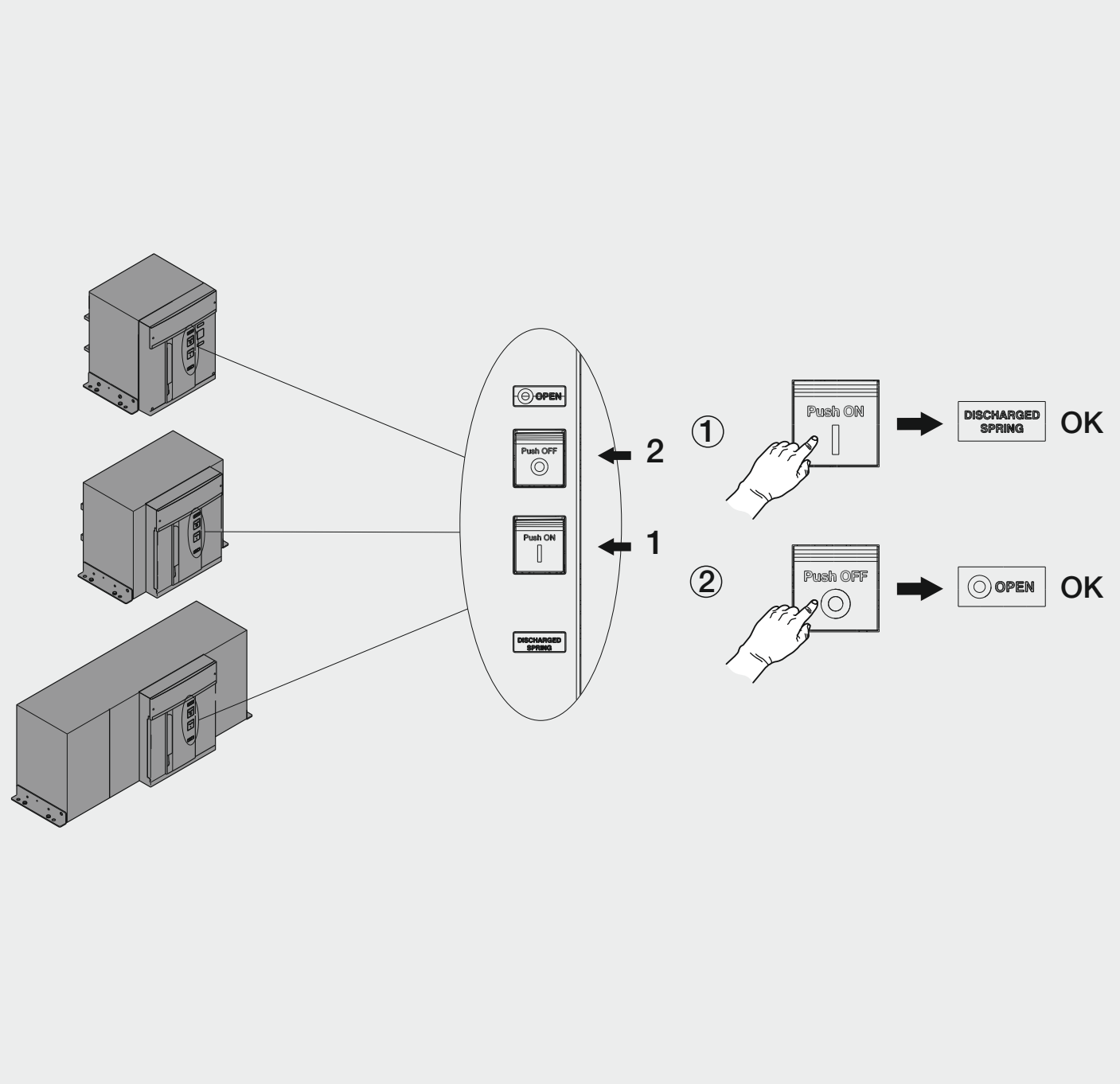

Power and productivity
for a better world™

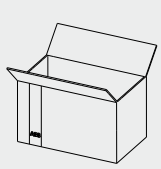

A** B* C D

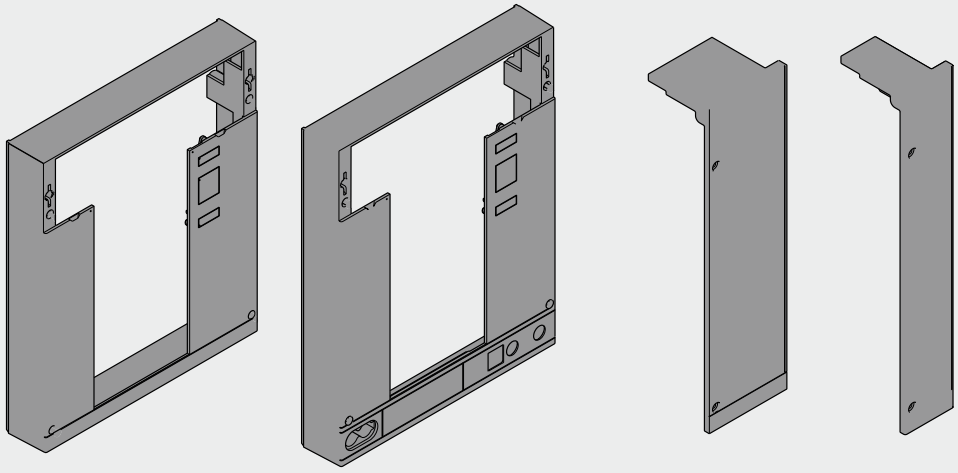

E F G H I

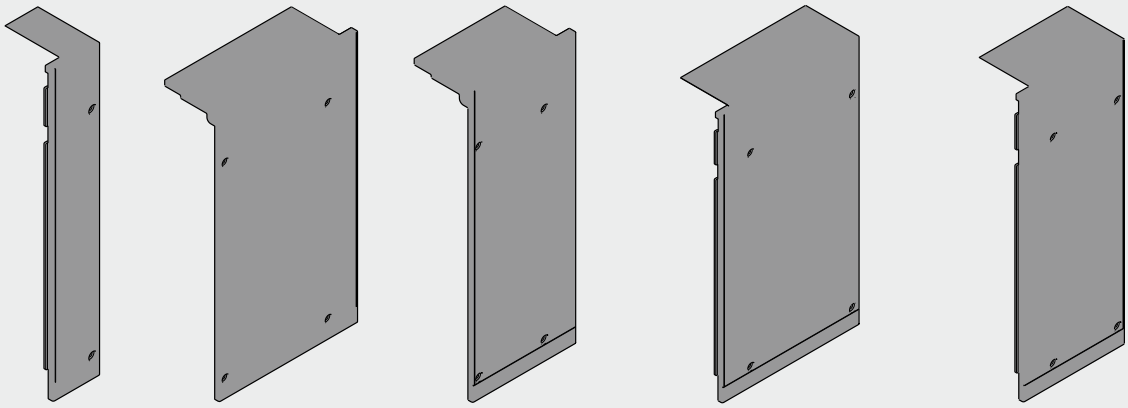

J** K** L M

M4x8 M4x50

		A**	B*	C	D	E	F	G	H	I	J**	K**	L	M
E2.2	**III**	1	1	-	-	-	-	-	-	-	-	-	-	4
	IV	1	1	1	-	-	-	-	-	-	1	-	2	4
E4.2	**III**	1	1	-	1	1	-	-	-	-	1	1	4	4
	IV	1	1	-	-	1	1	-	-	-	1	1	6	4
E6.2	**III**	1	1	-	-	-	1	-	1	1	2	1	12	4
	IV (FS)	1	1	-	-	-	1	1(2)	1	1	2	2	16(20)	4

** FIXED VERSION ONLY
* WITHDRAWABLE VERSION ONLY

1 F

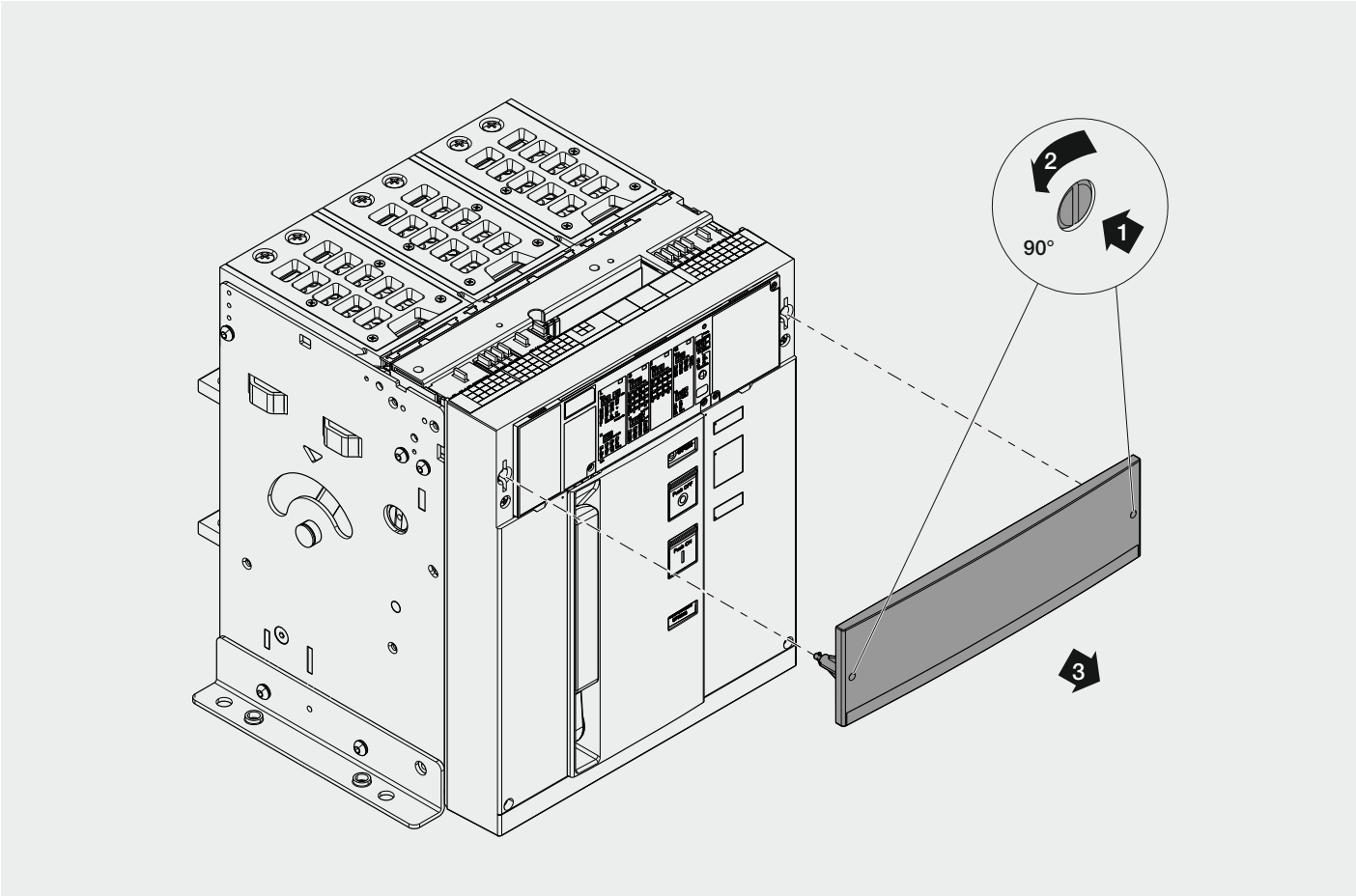

2 F

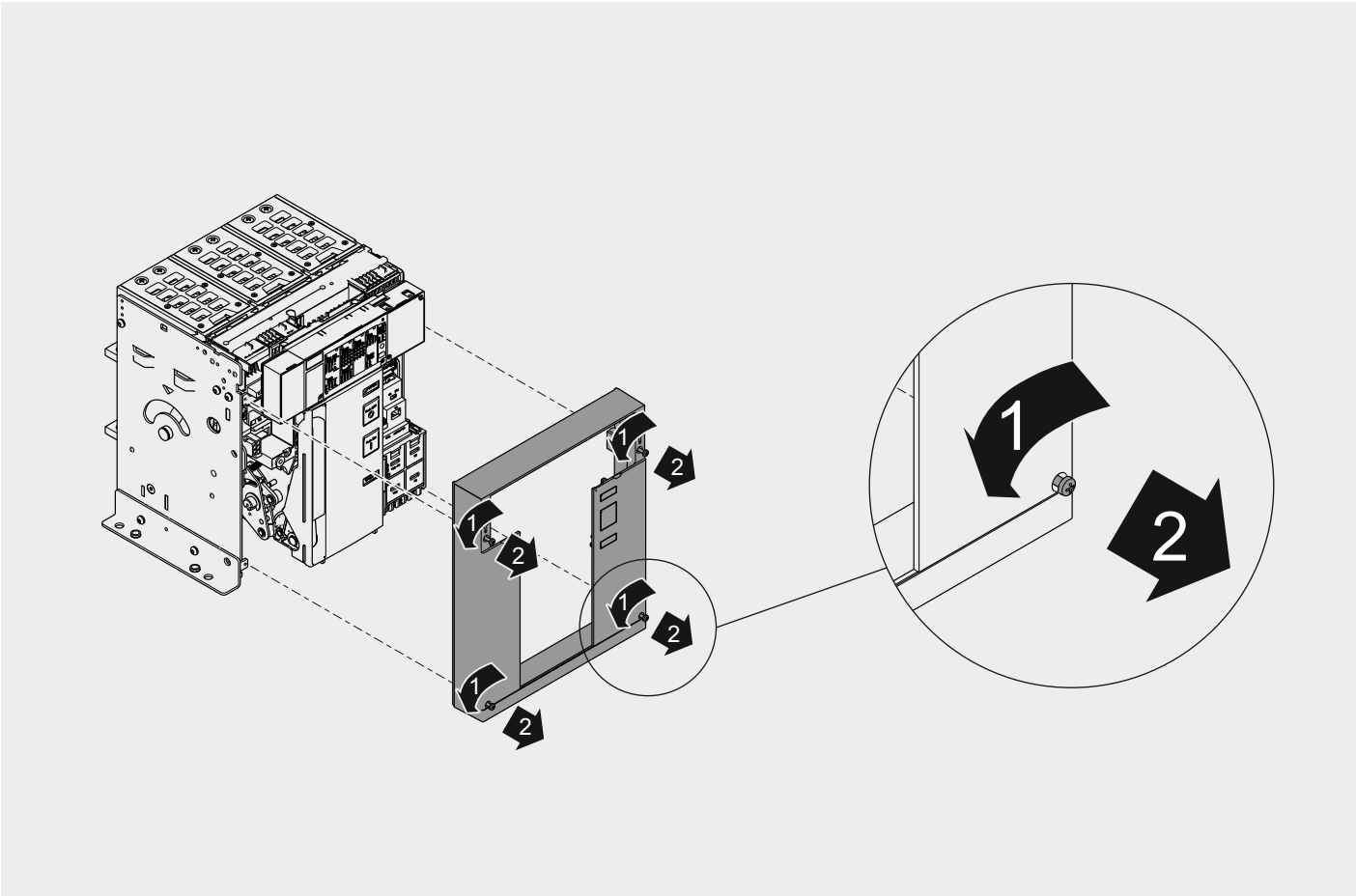

3 W

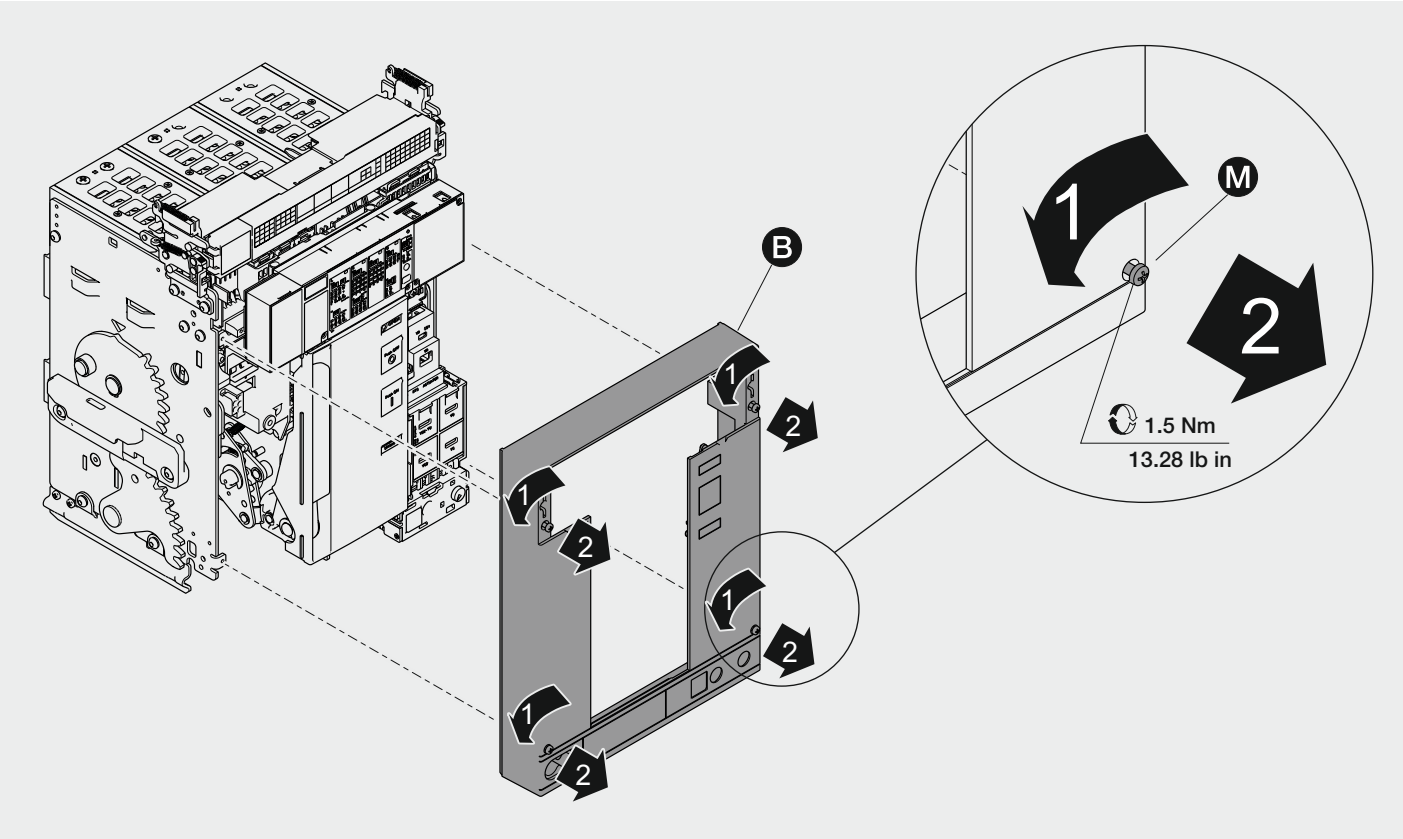

4 EXAMPLE FOR E2.2 IV

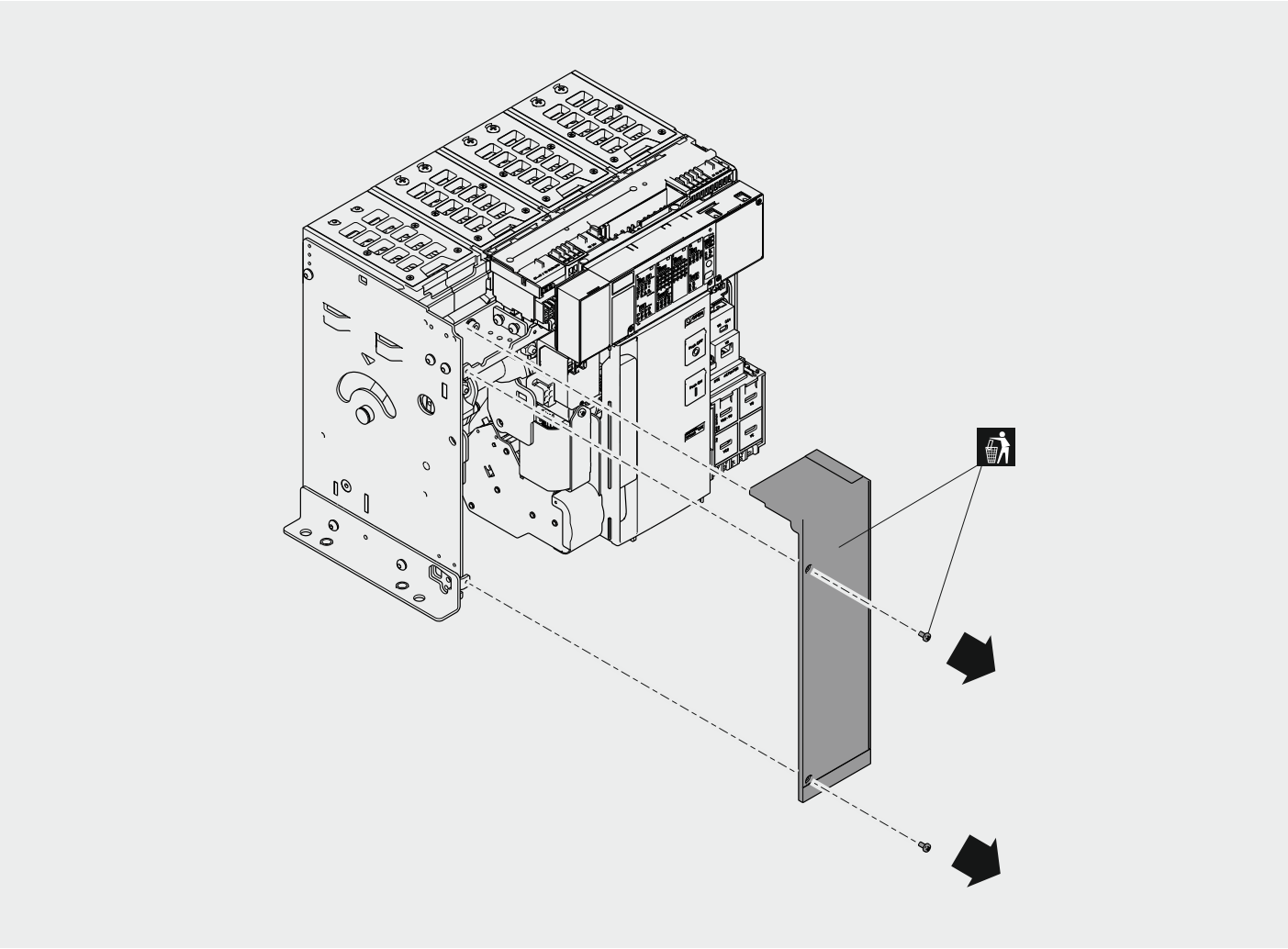

5 EXAMPLE FOR E4.2 III

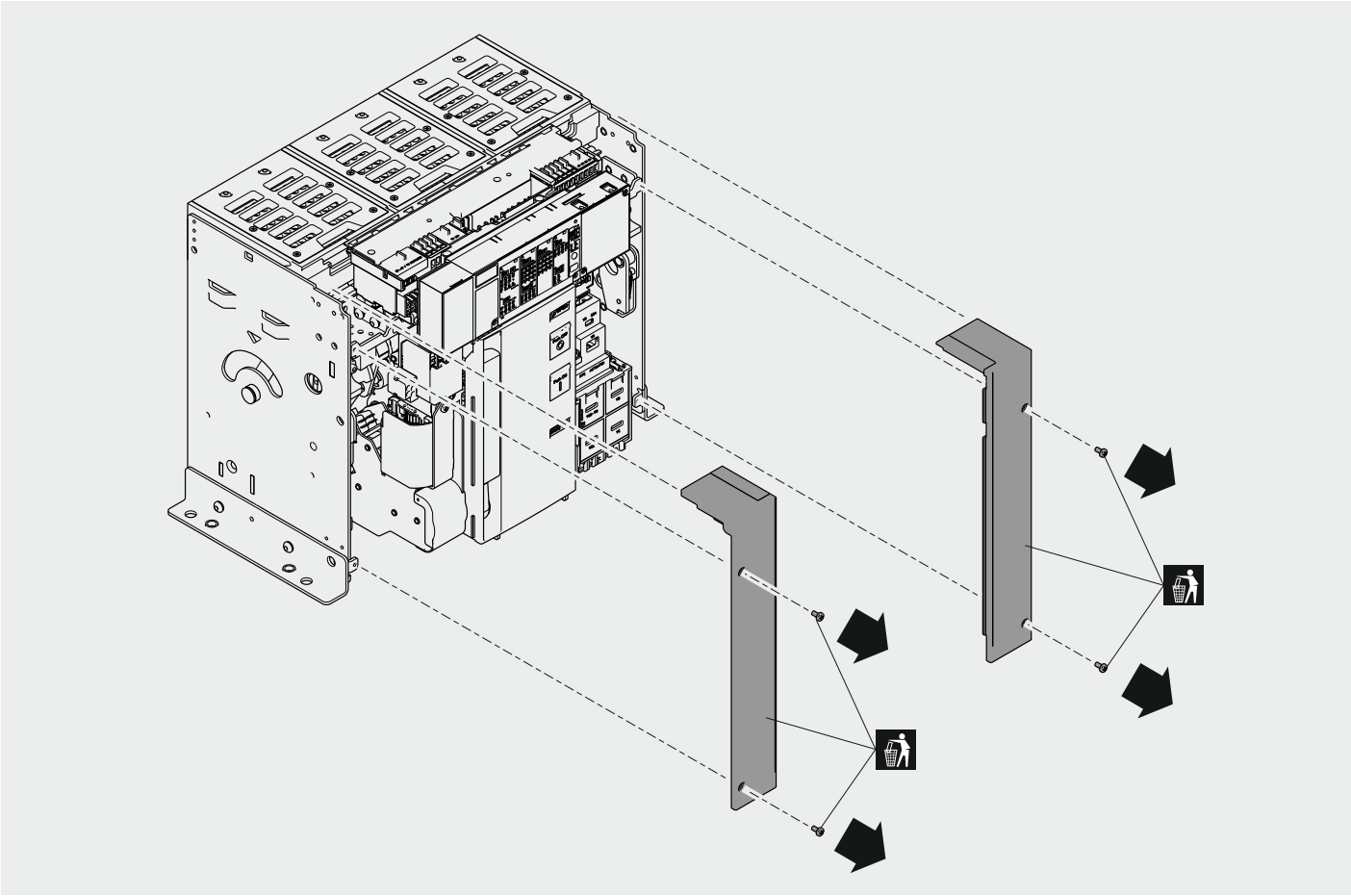

6 EXAMPLE FOR E4.2 IV

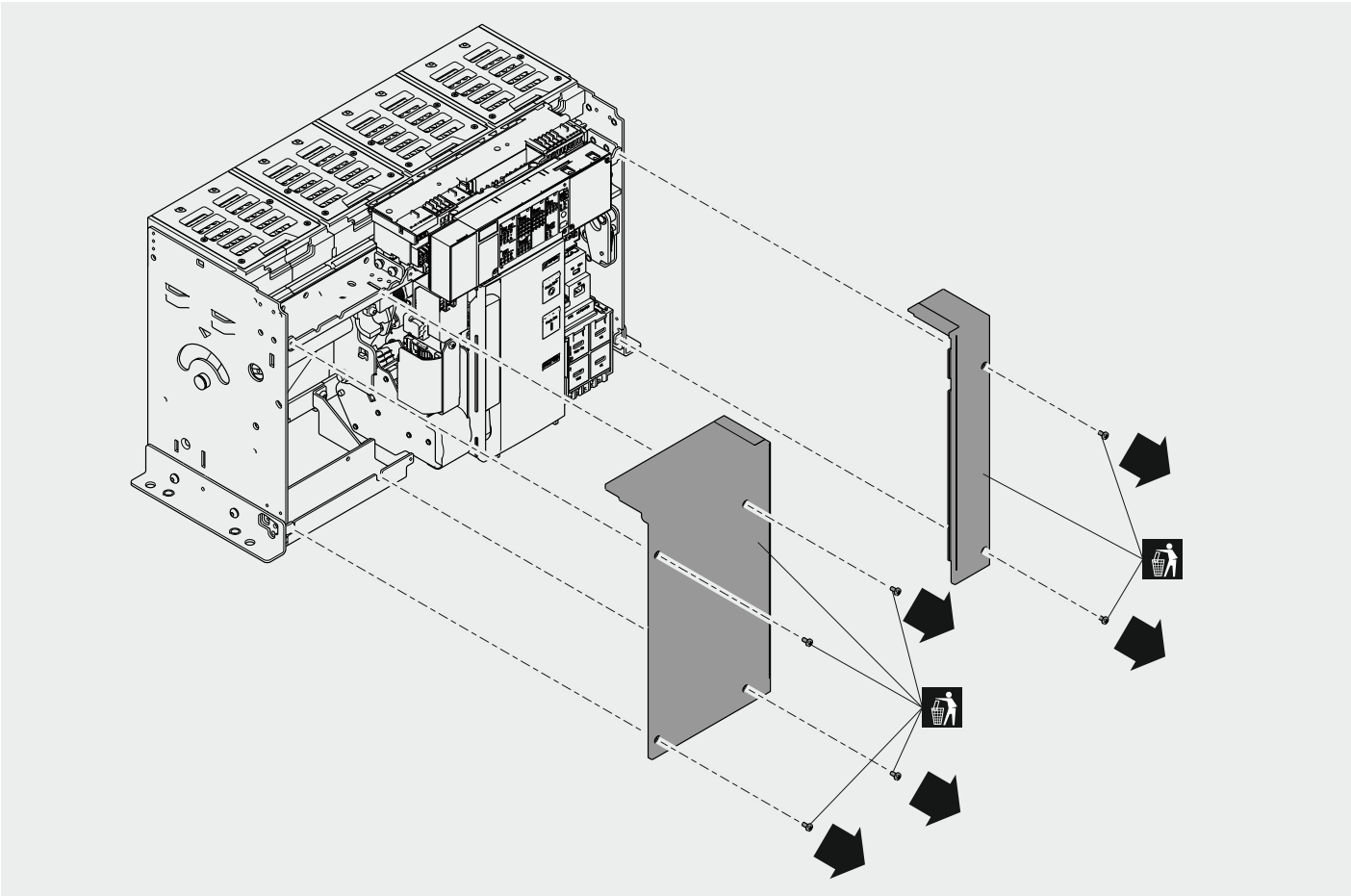

7 EXAMPLE FOR E6.2 III

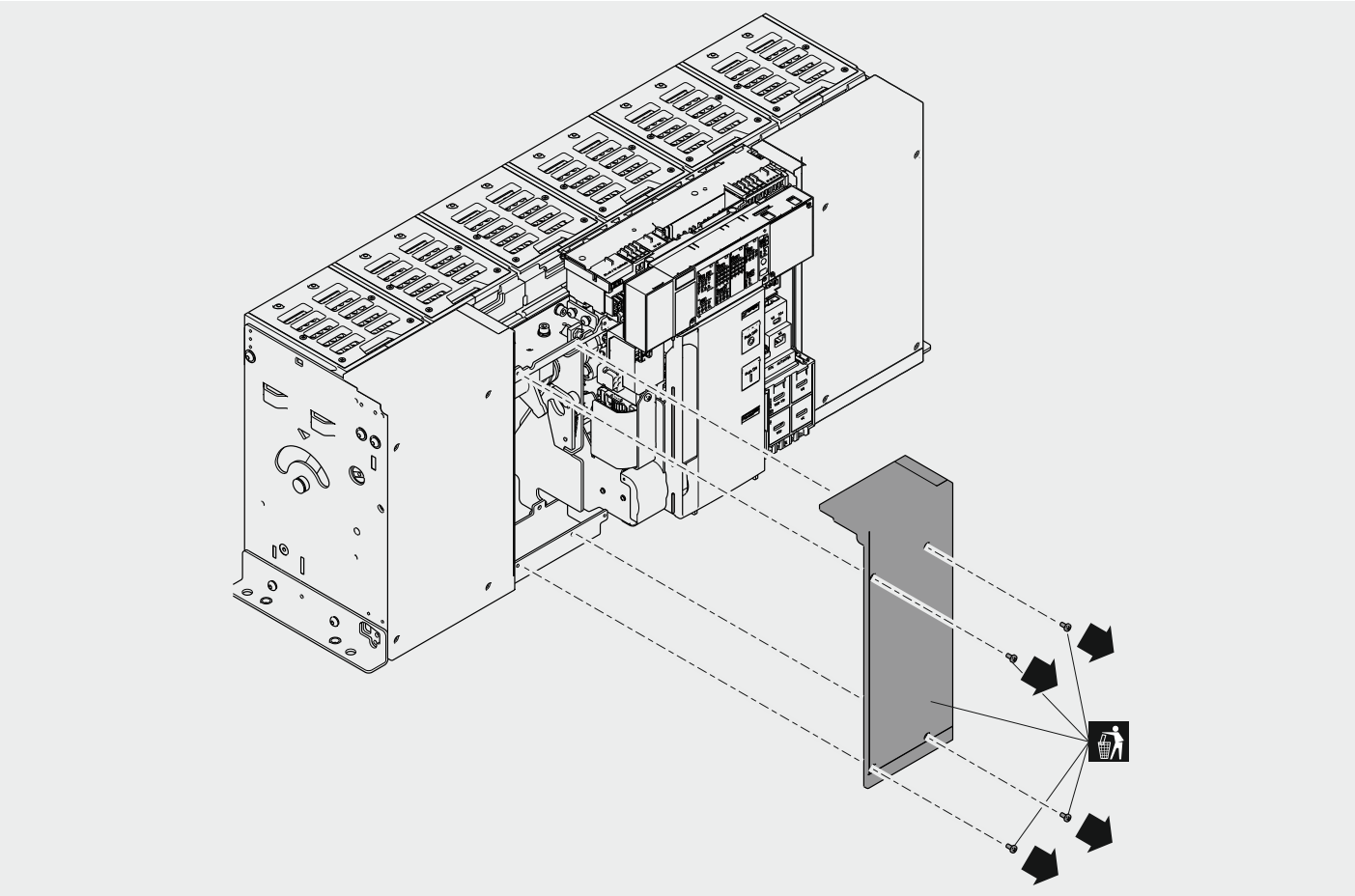

8 EXAMPLE FOR E6.2 III

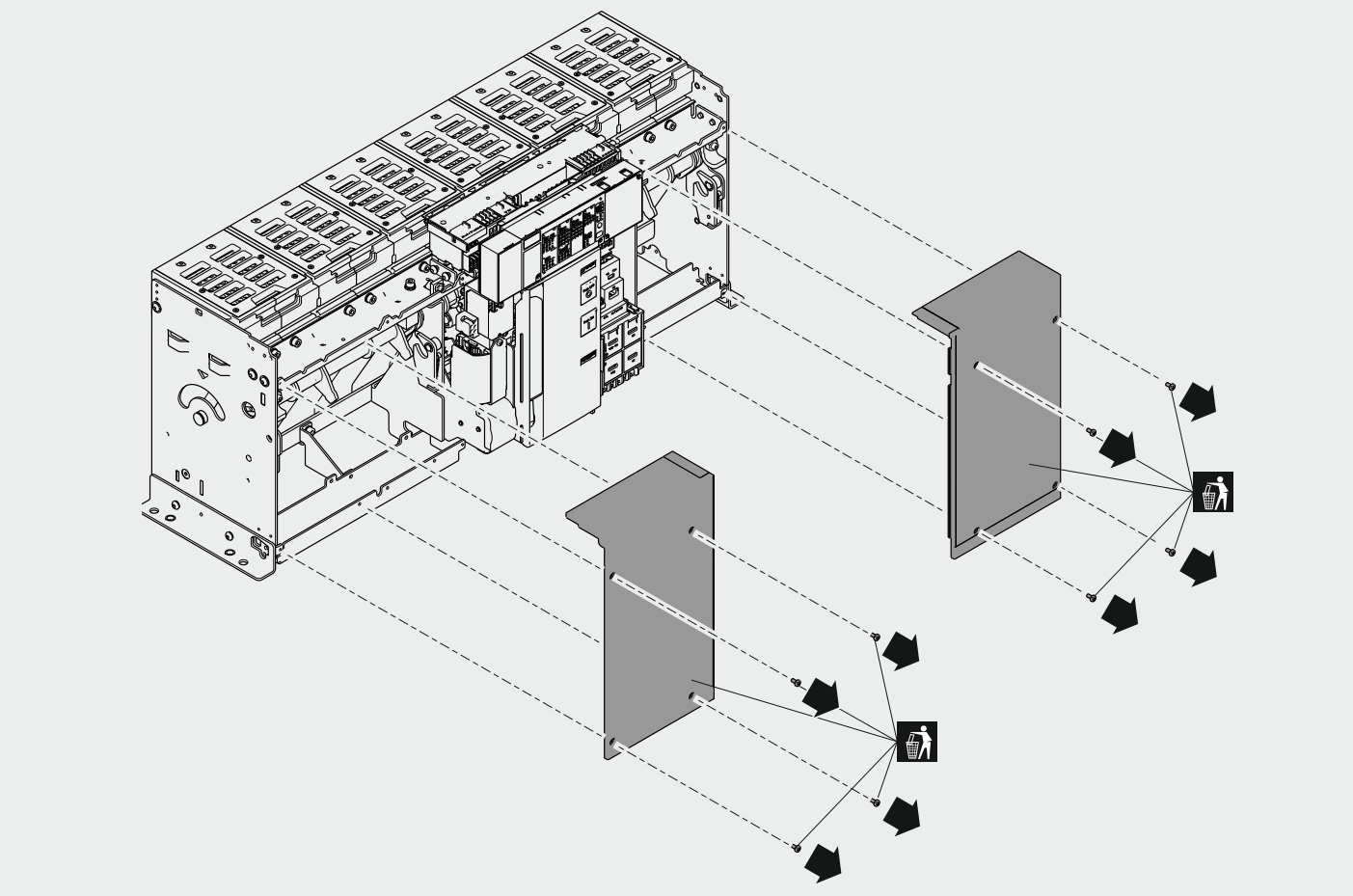

9 EXAMPLE FOR E6.2 IV

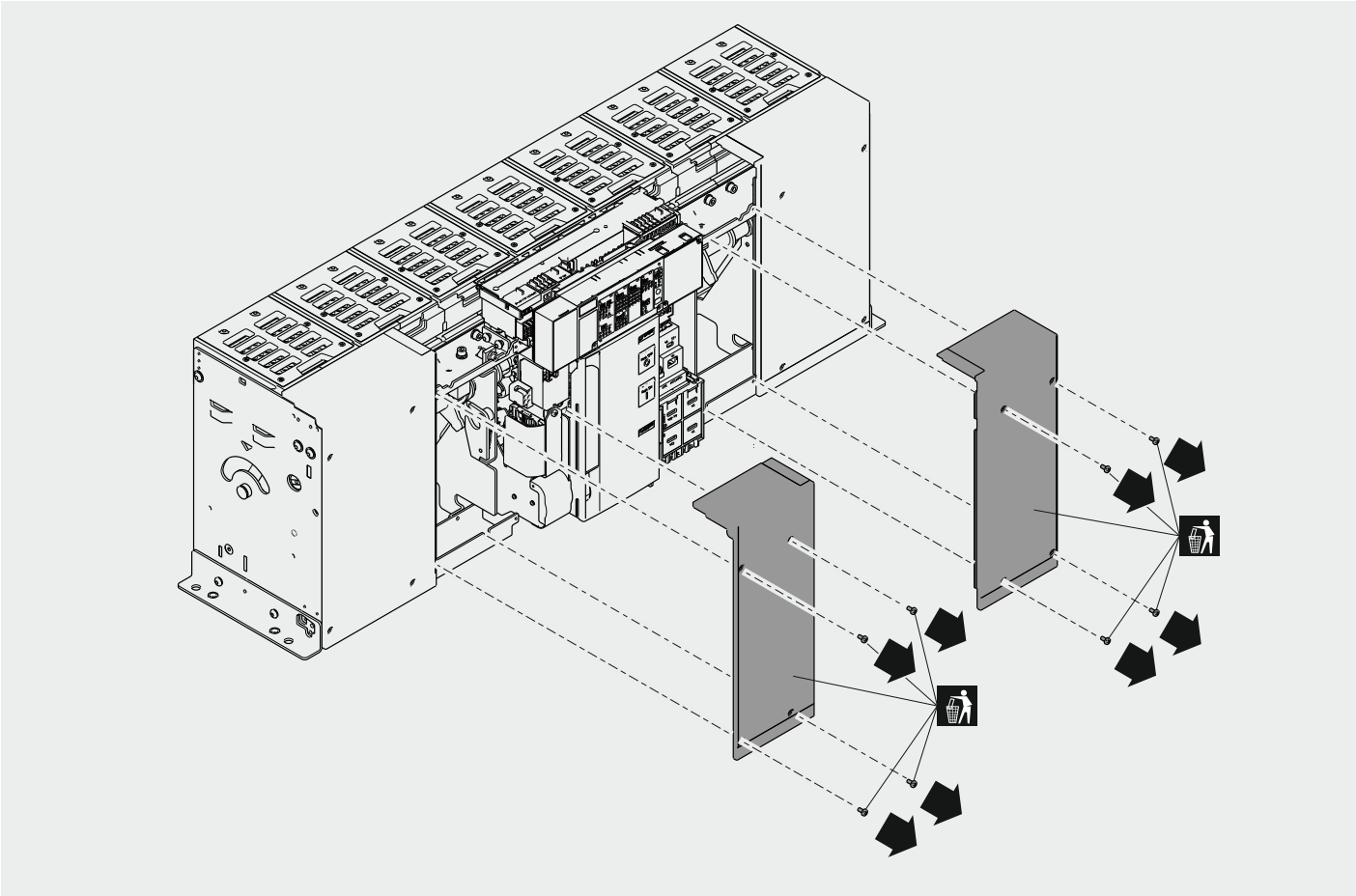

10 EXAMPLE FOR E6.2 IV

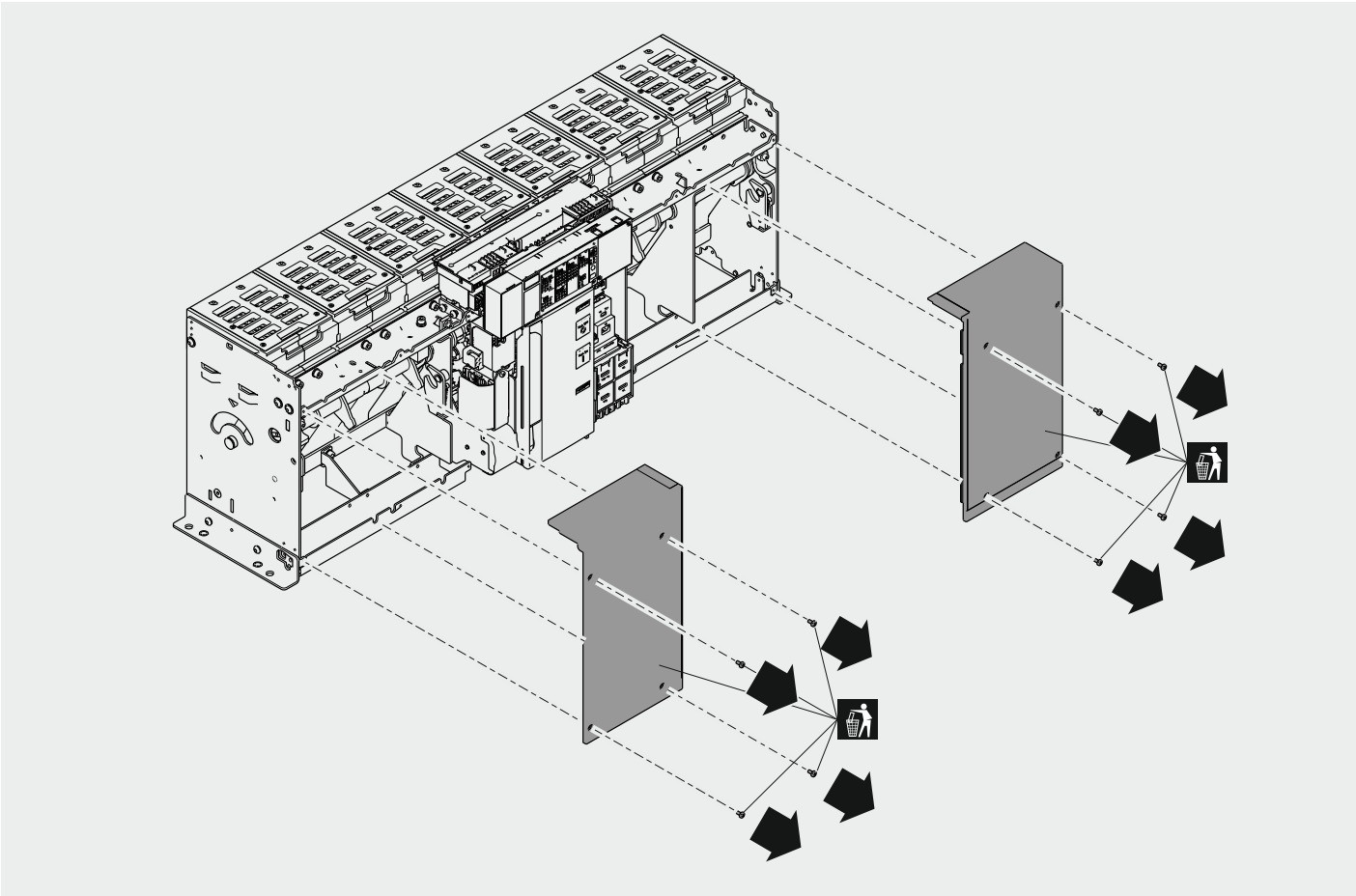

11 EXAMPLE FOR E6.2 IV FULL SIZE

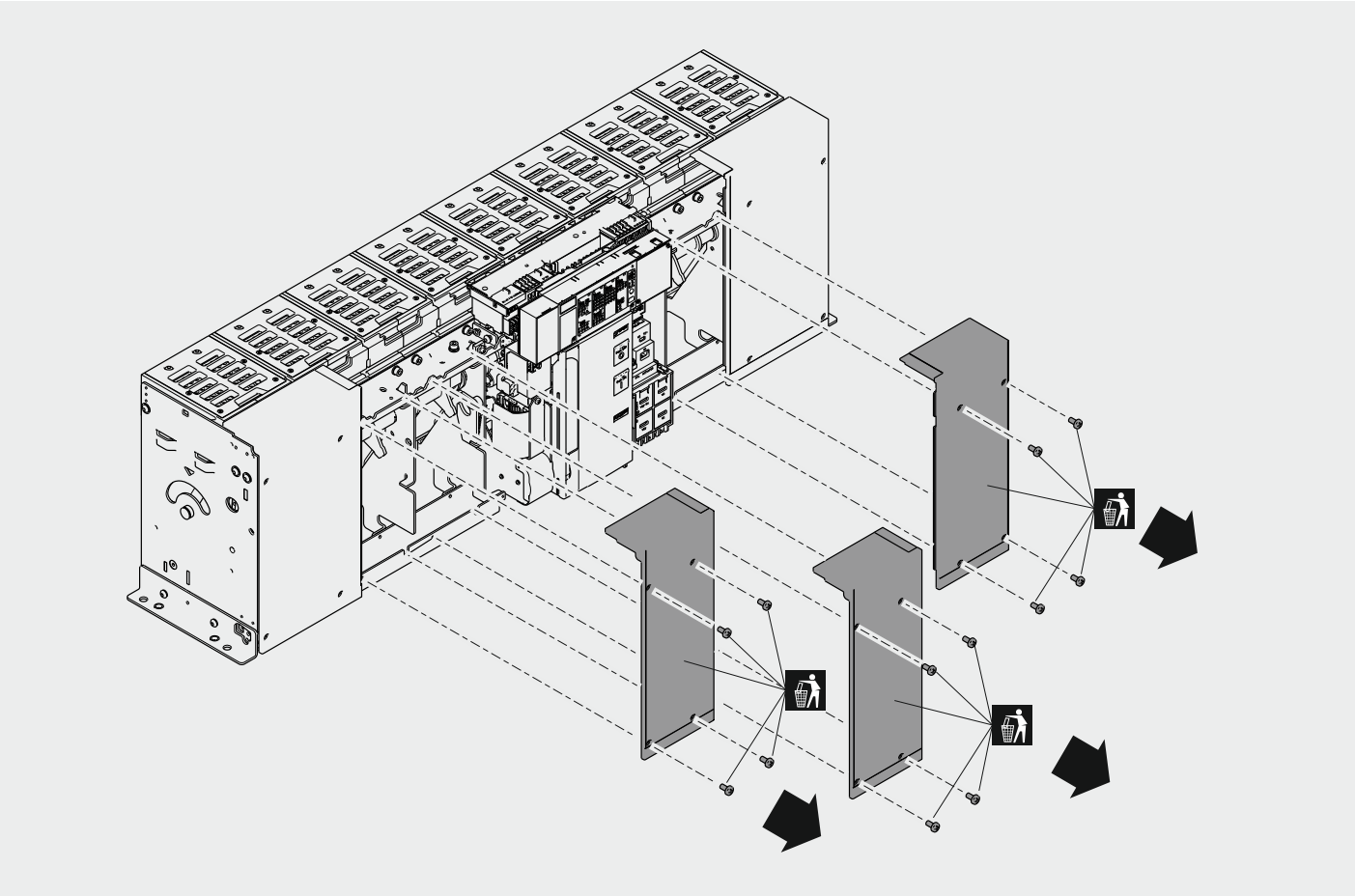

12 EXAMPLE FOR E6.2 IV FULL SIZE

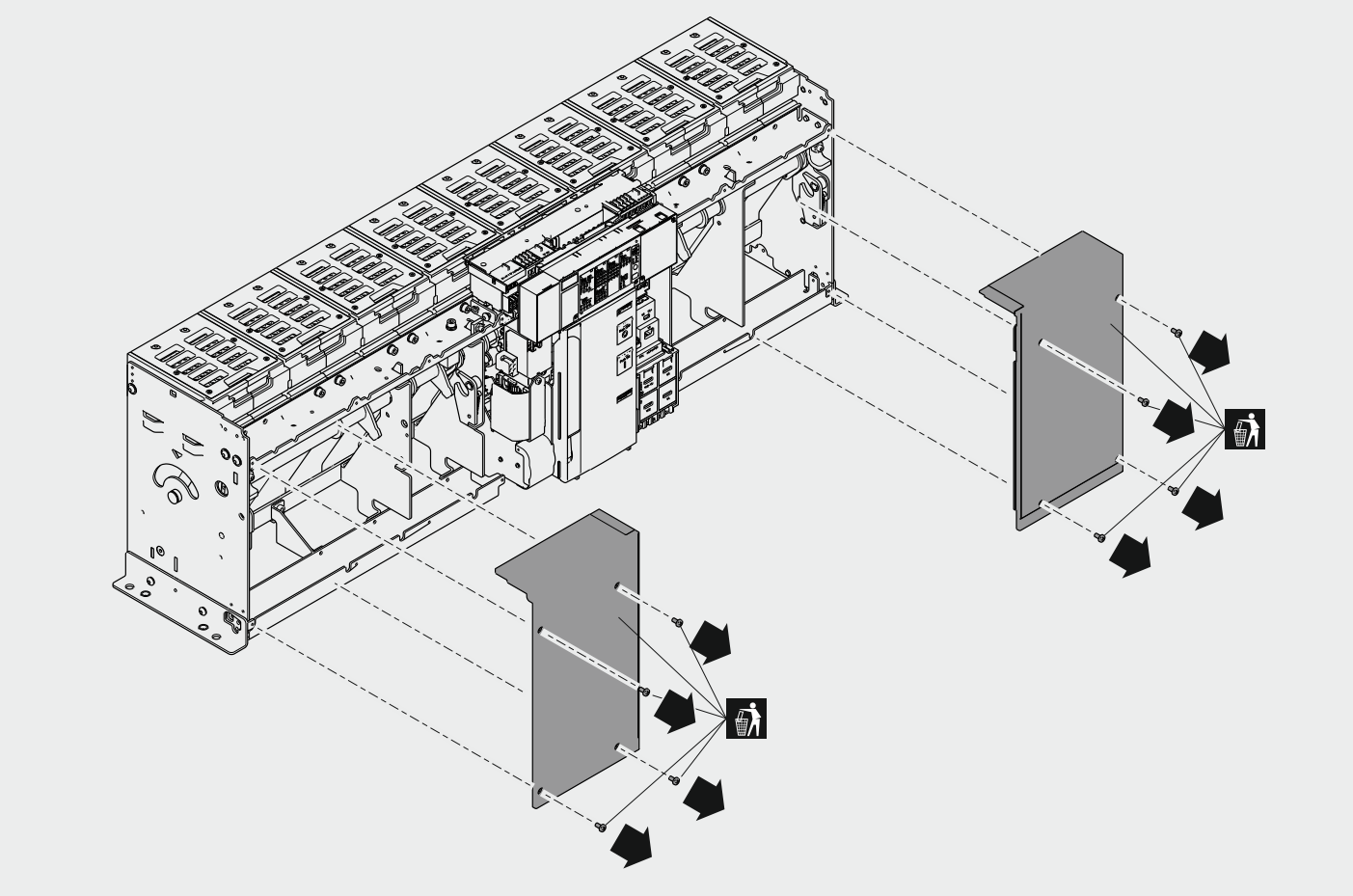

13 COVER PLUGS ASSEMBLY

To assemble plugs on the circuit-breaker cover, consult document 1SDH001400R0922 which is available in ABB's online library at http://www.abb.com/abblibrary/DownloadCenter/

14 EXAMPLE FOR E2.2 IV

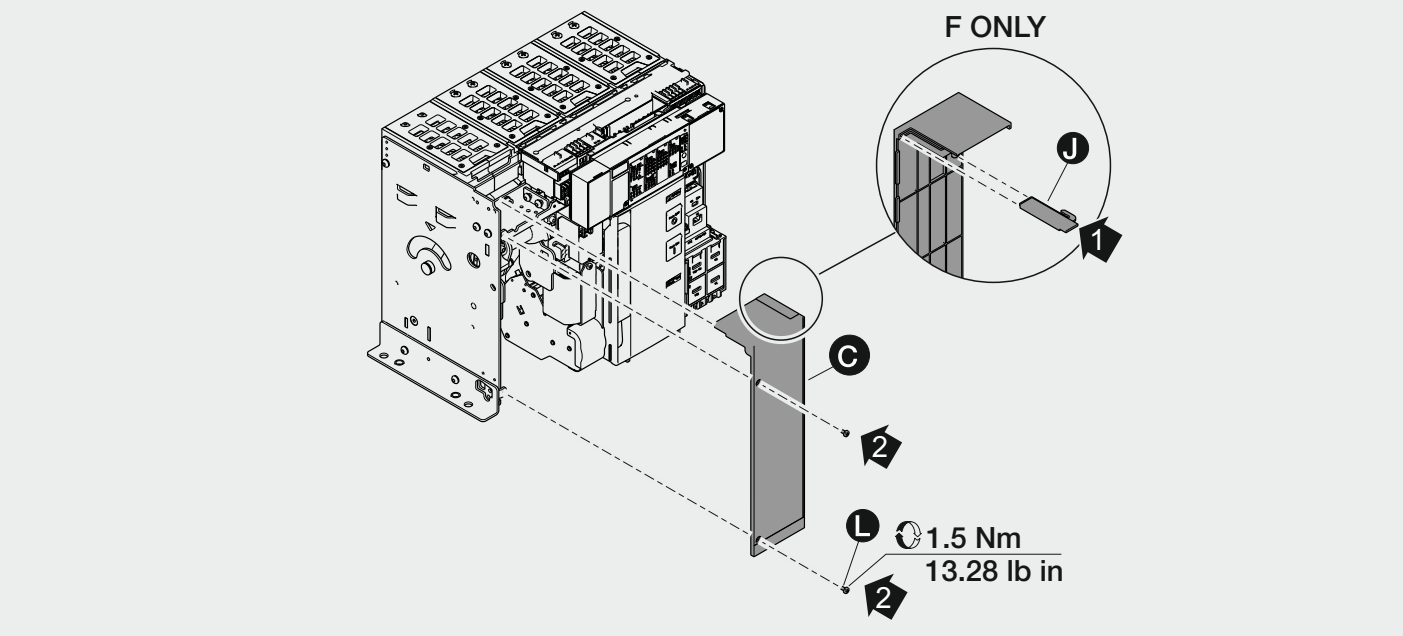

15 EXAMPLE FOR E4.2 III

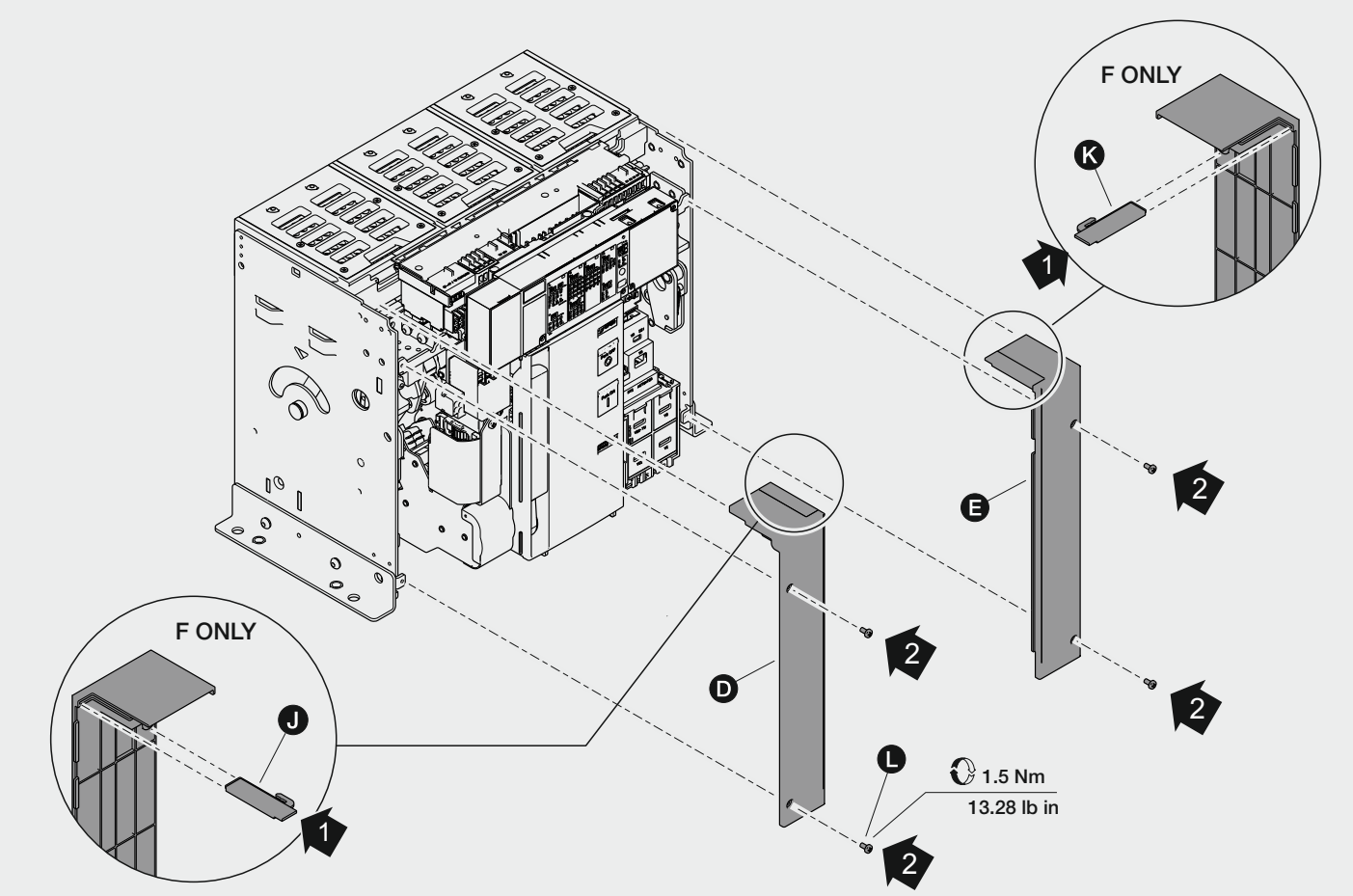

EXAMPLE FOR E4.2 IV

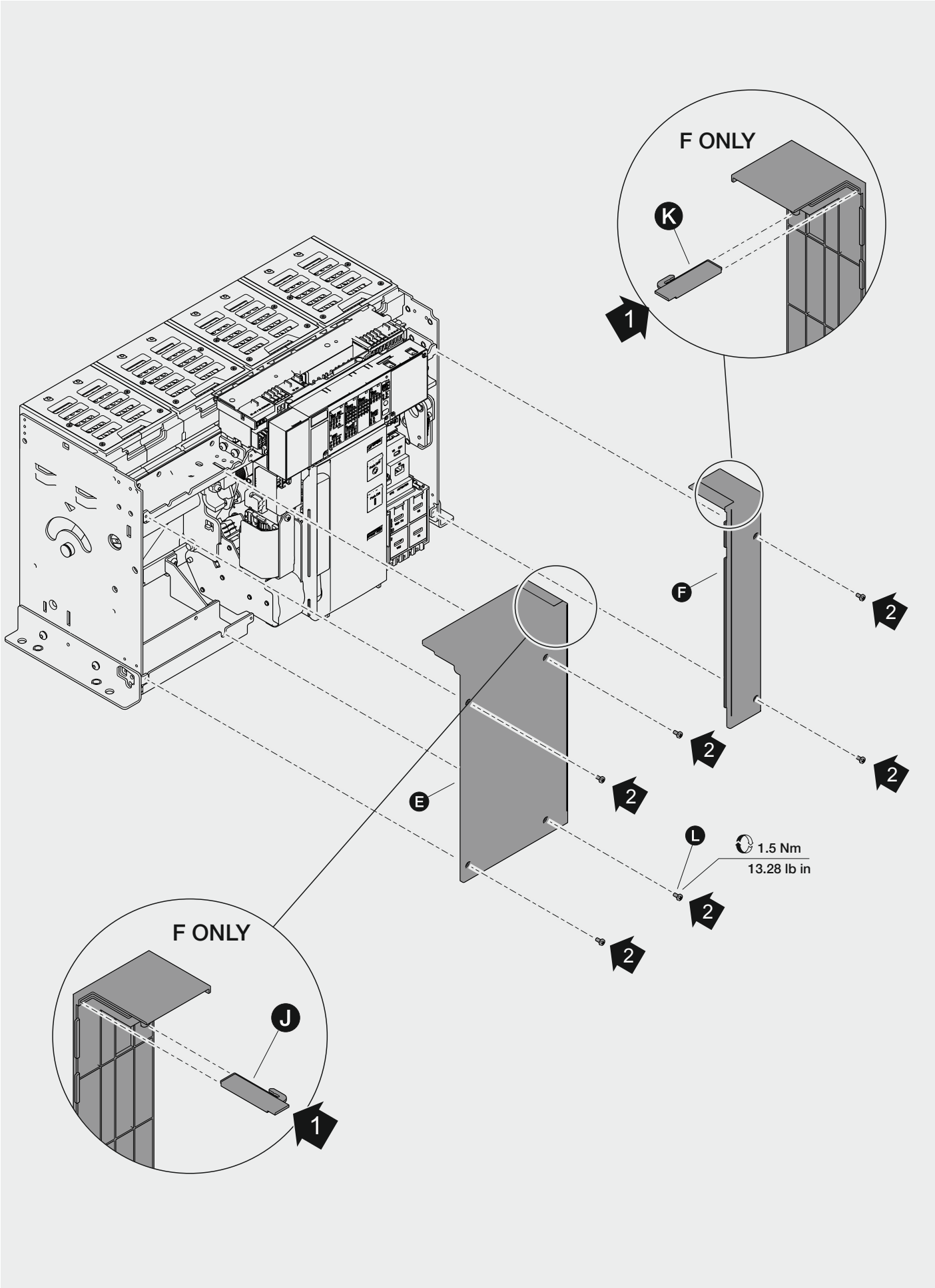

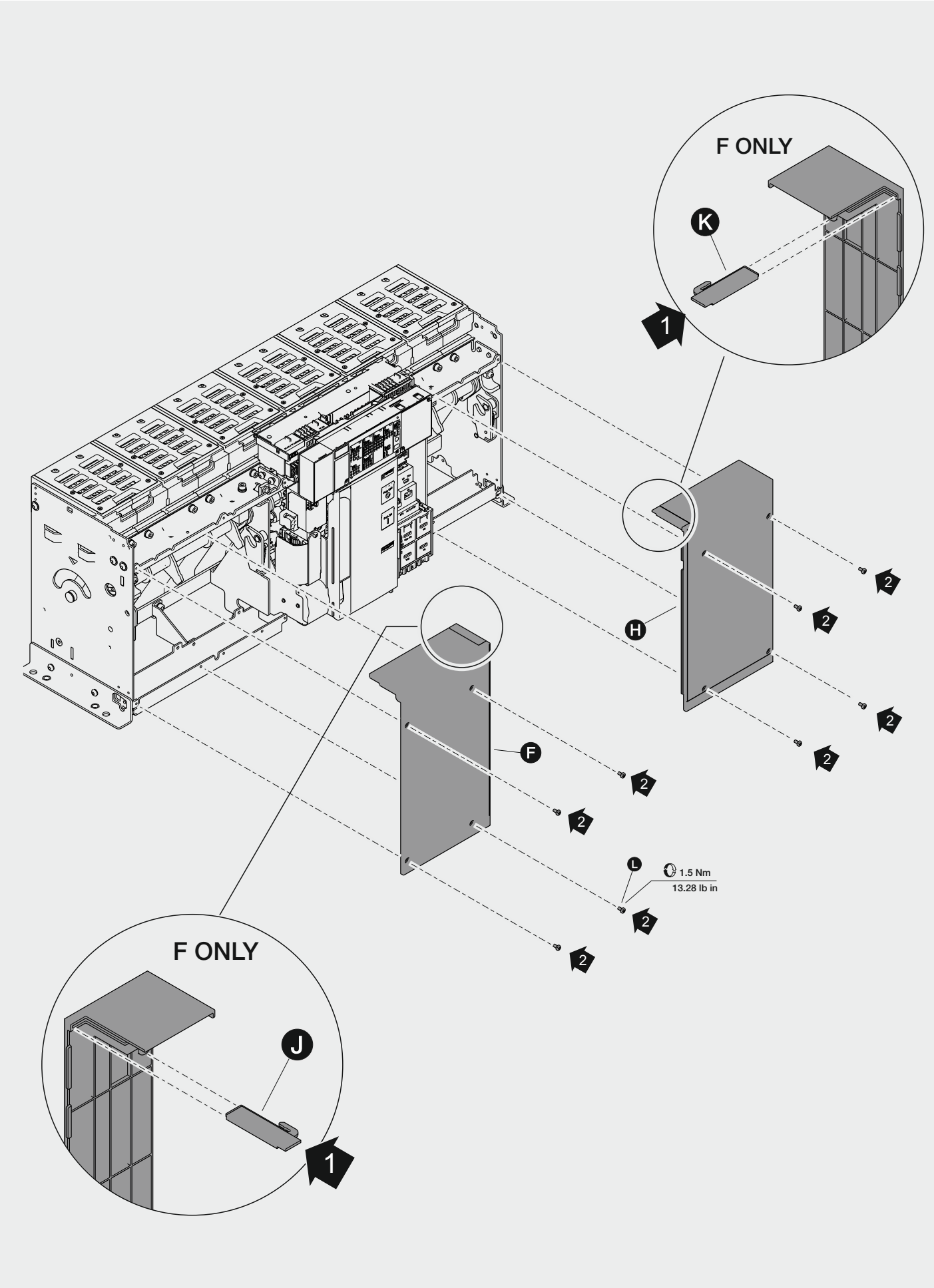
F ONLY
K
1
H
2
F
L
1.5 Nm
13.28 lb in
F ONLY
J
1

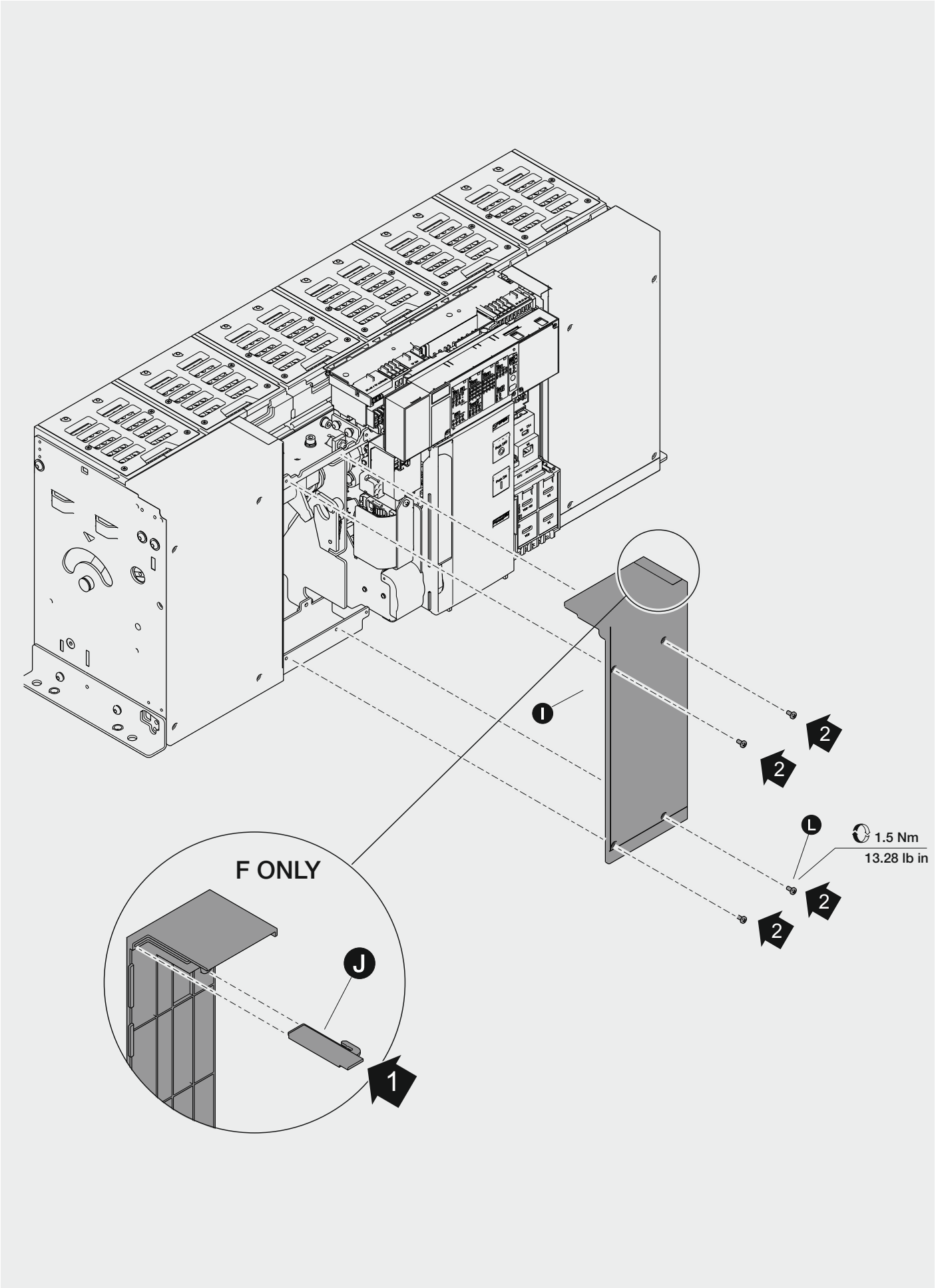
I
2
2
L
1.5 Nm
13.28 lb in
2
2
F ONLY
J
1

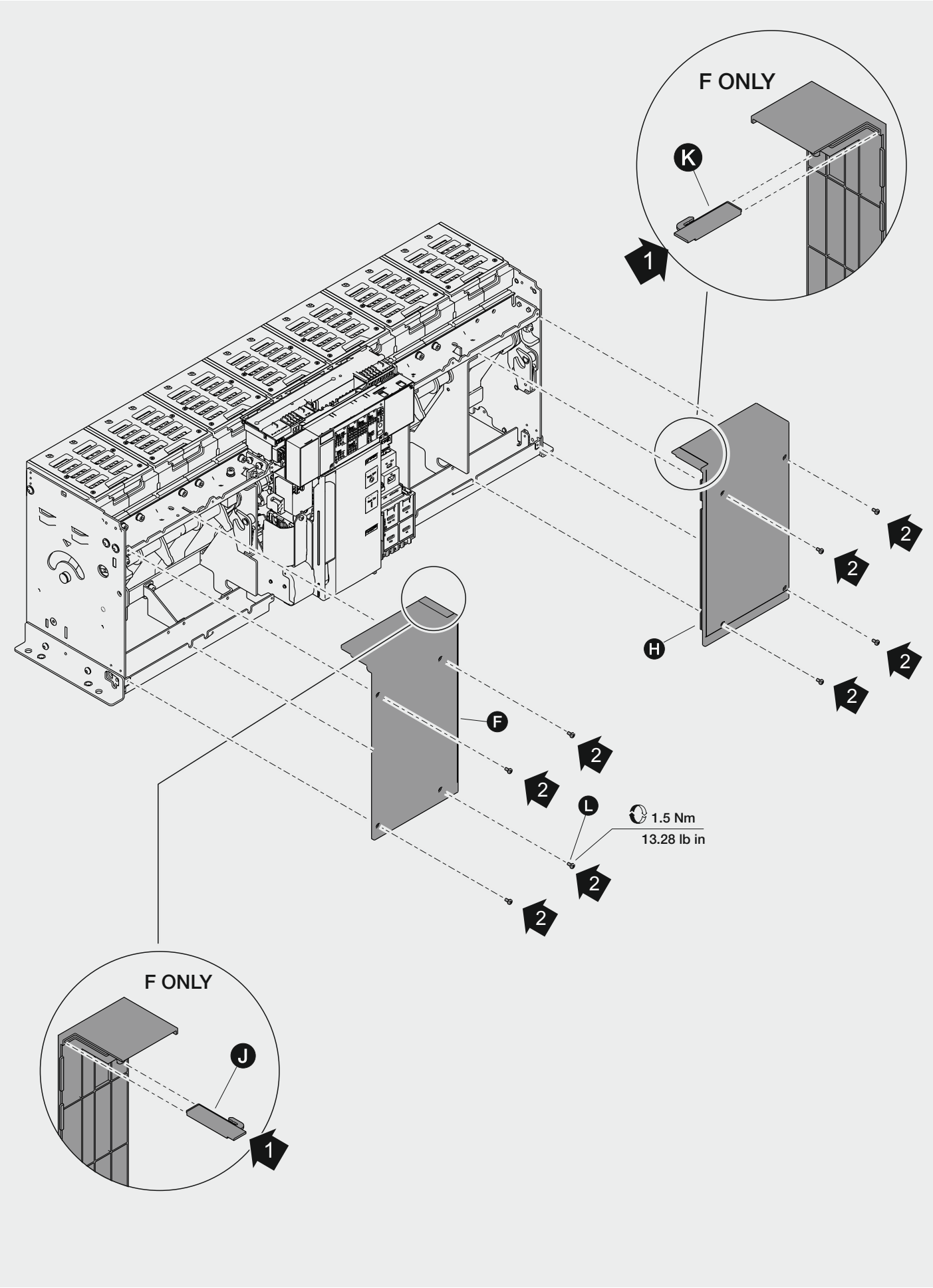
F ONLY
K
1
2
2
2
2
H
F
2
2
L
1.5 Nm
13.28 lb in
2
2
F ONLY
J
1

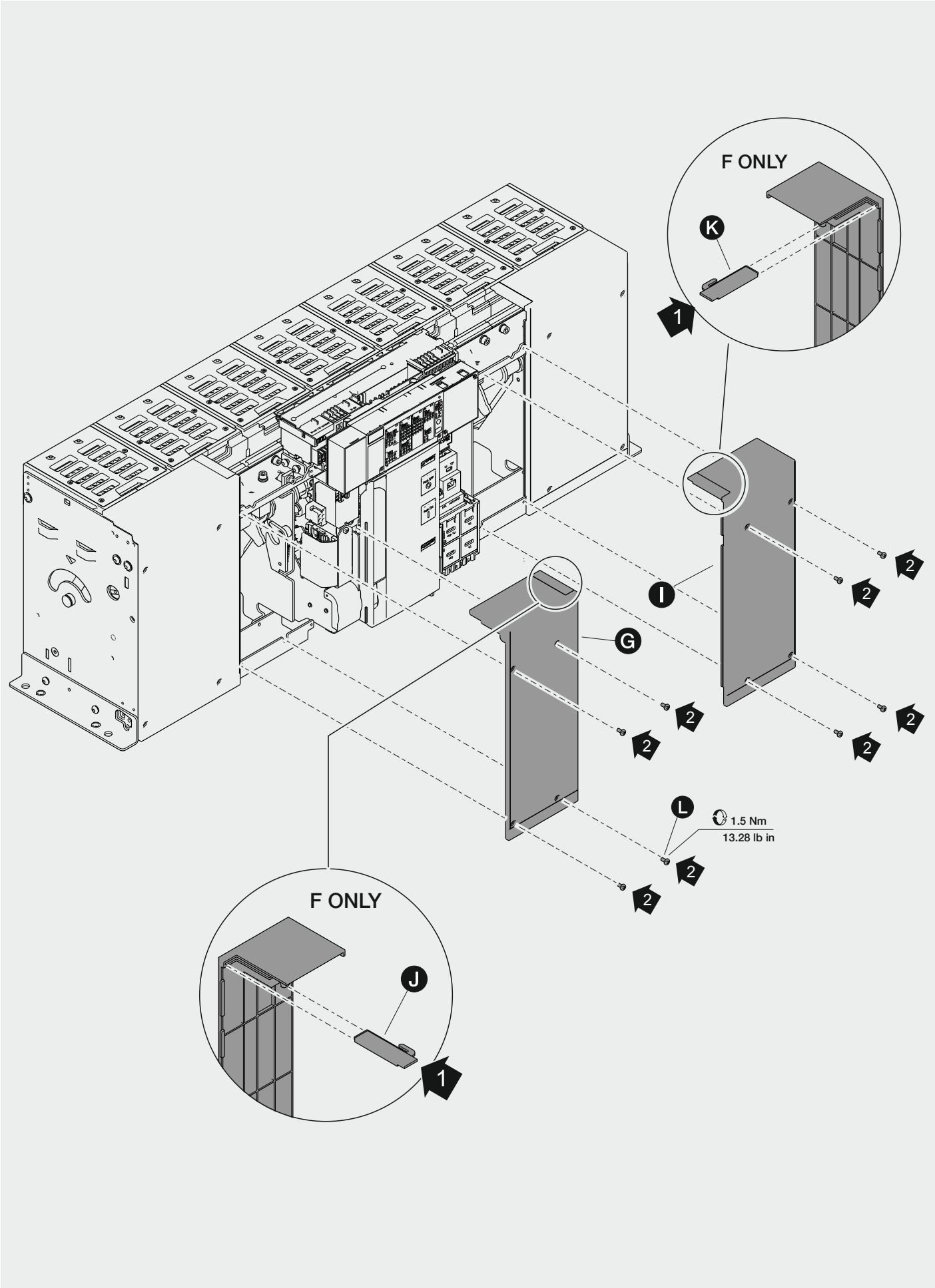
F ONLY
K
1
I
G
2
L
1.5 Nm
13.28 lb in
F ONLY
J
1

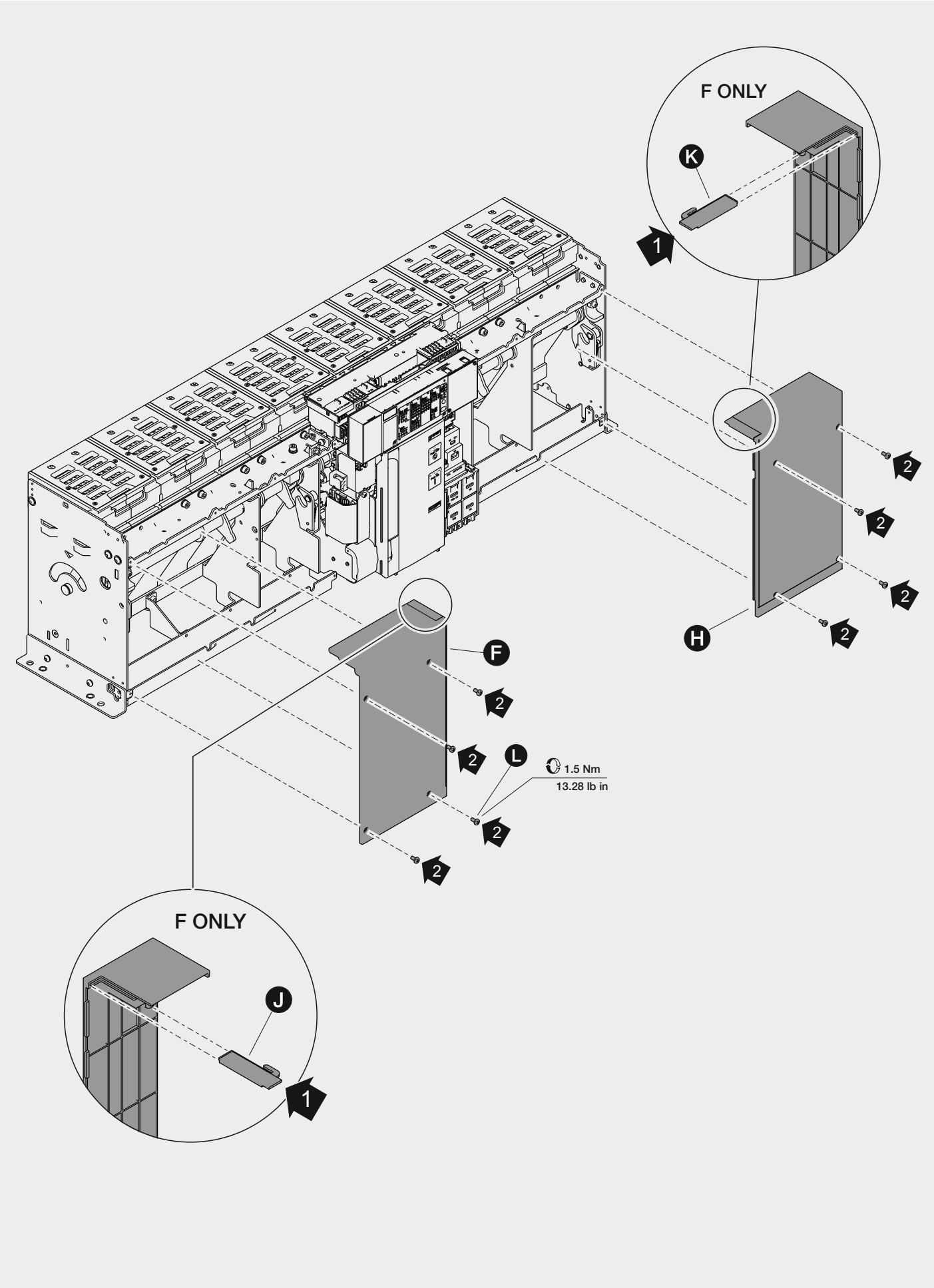
F ONLY
K
1
2
2
2
2
H
F
2
2
L
1.5 Nm
13.28 lb in
2
2
F ONLY
J
1

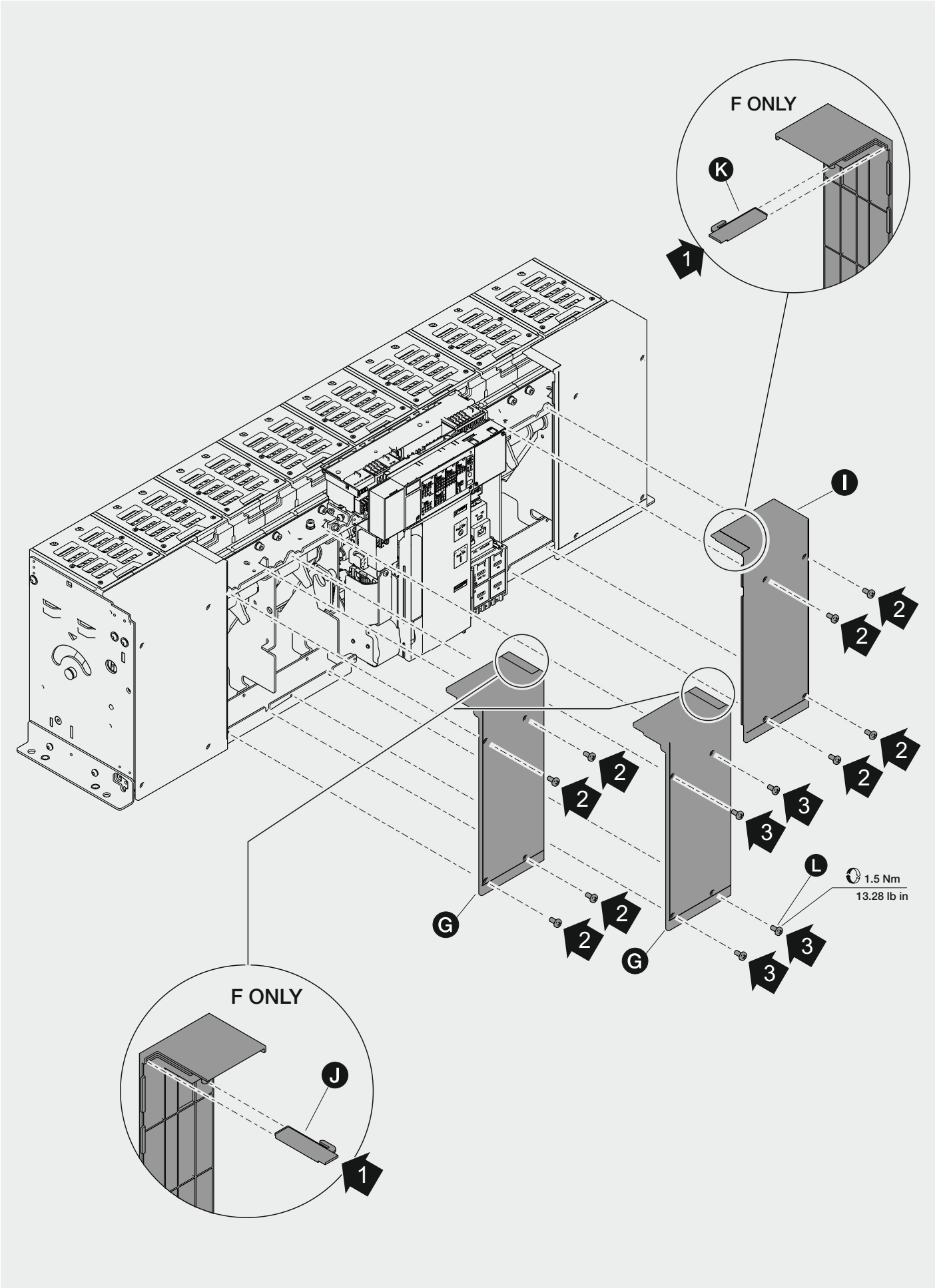
F ONLY
K
1
I
2
2
2
2
2
2
2
2
3
3
3
3
L
1.5 Nm
13.28 lb in
G
G
F ONLY
J
1

23 F

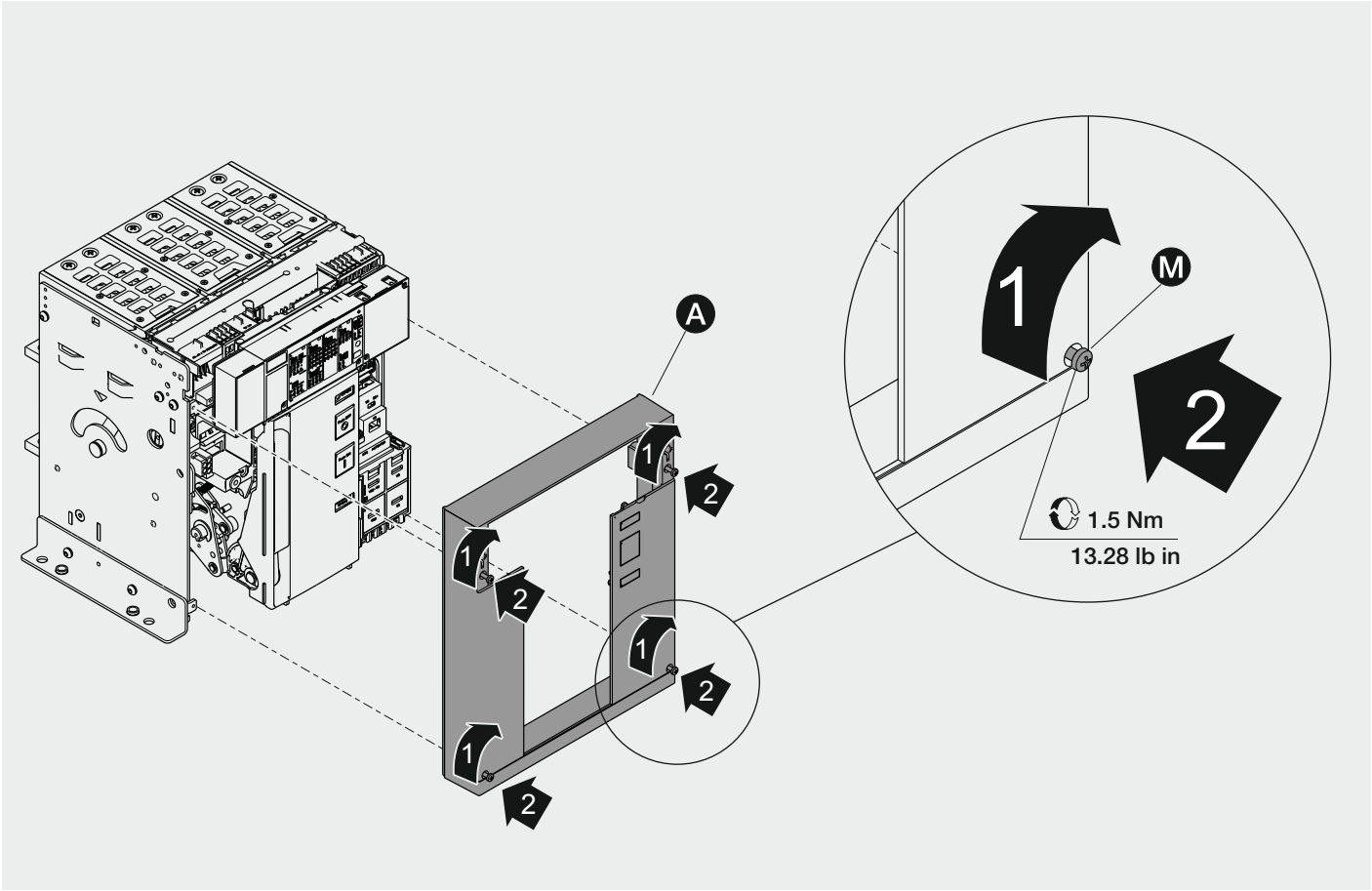

24 W

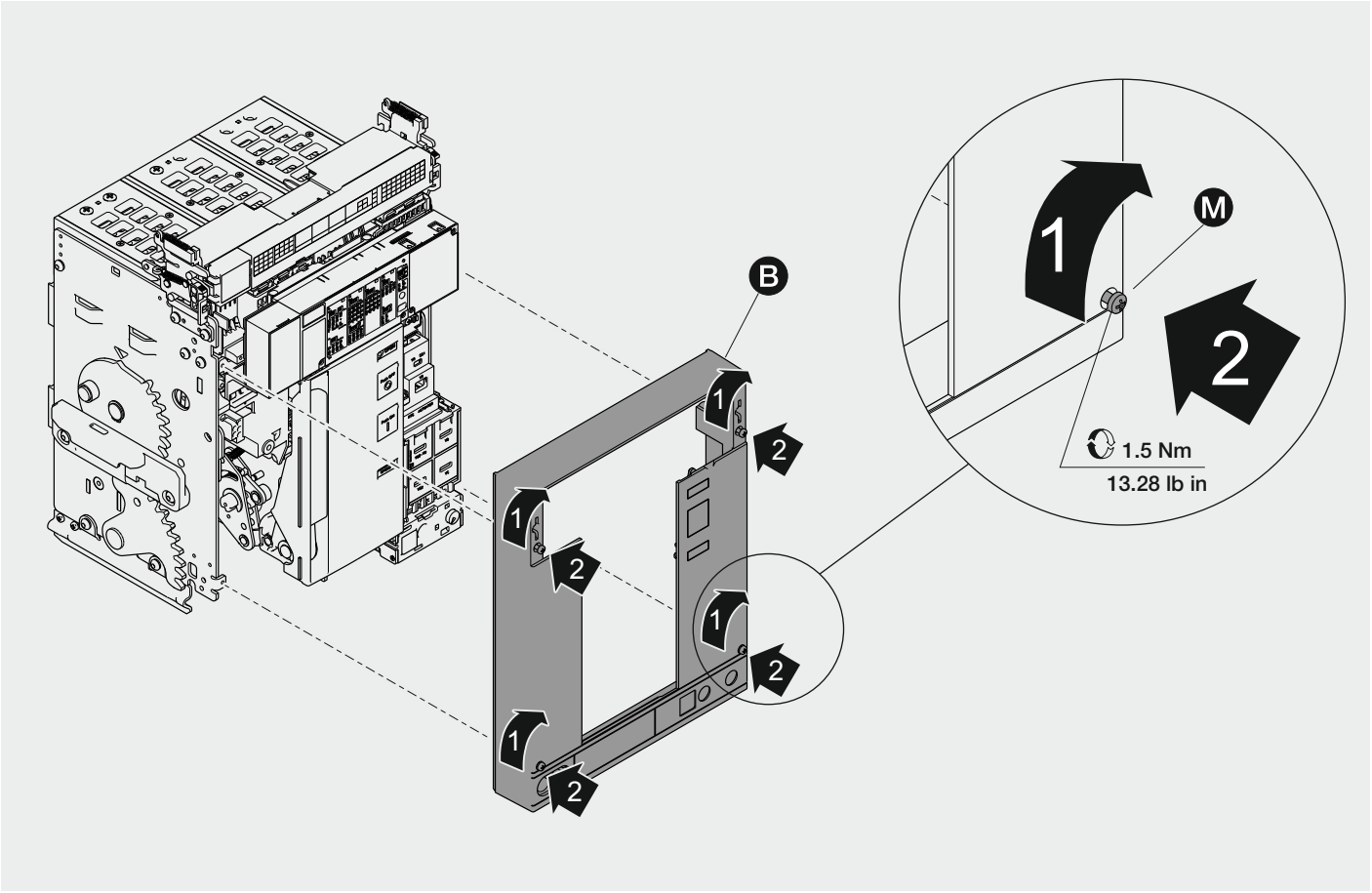

For more information please contact:

ABB S.p.A.
ABB SACE Division
Via Pescaria, 5
24123 Bergamo - Italy
Phone: +39 035 395 111

© Copyright 2013-2015 ABB. All rights reserved.
www.abb.com

Power and productivity
for a better world™