Specific requirements on HVDC converter transformers

Åke Carlson
ABB Transformers AB
Ludvika Sweden

Abstract

The converter transformer is an integral part of an HVDC system. High AC and DC voltages put specific requirements on the dielectric insulation. Non sinusoidal currents give rise to additional losses which are to be considered.

1. The transformer function

In an HVDC system the converter transformer serves several functions. Its primary functions are:

- Supply of AC voltages in two separate circuits with a relative phase shift of 30 electrical degrees for reduction of low order harmonics, especially the 5th and 7th harmonics.
- Act as a galvanic barrier between the AC and DC systems to prevent the DC potential to enter the AC system.
- Reactive impedance in the AC supply to reduce short circuit currents and to control the rate of rise in valve current during commutation.
- Voltage transformation between the AC supply and the HVDC system.
- A fairly large tap range with small steps to give necessary adjustments in supply voltage.

2. Transformer connections

The common arrangement to achieve the circuits with 30 degree phase shift is to have the two valve side windings connected in star and delta respectively, and using one and the same connection for the line side windings.

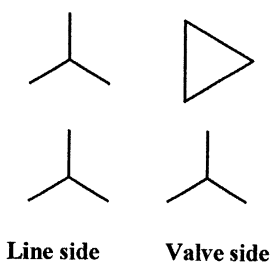

Figure 1: Delta and wye connected valve side windings will give a 30 degree phase shift between the two supply voltages. An alternate three-phase connection named extended delta is mentioned in clause 8 below

3. Dielectric stress

HVDC systems have normally their converters arranged as two six pulse bridges connected in series, where the bottom end of the lower bridge is tied to ground. The DC potentials on the two valve side windings will then be about one and three fourth of the HVDC line voltage.

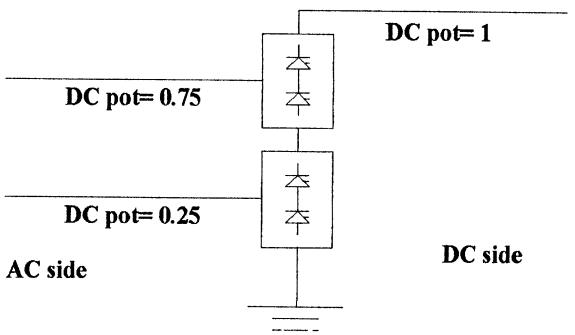

Figure 2: A converter is arranged as two bridges in series

The DC-potentials will create extra stresses in the transformer in addition to the normal AC stresses. In a steady state condition the DC stresses are primarily governed by the resistivities of the individual materials in the insulation arrangement. This is different to the AC stresses which has capacitive distribution given by the different relative permittivities of the insulation materials.

Conventional insulation materials used in normal power transformers such as paper and pressboard – both from cellulose – together with mineral oil have proven to be suitable for converter transformers too. Also the build-up of the insulation arrangement is similar, using paper covered conductors and a barrier system of pressboard sheets perpendicular to the field stress.

The actual properties of the insulation materials will, however, result in quite different stress distributions for AC and steady state DC.

The ratio of resistivities for cellulose and oil may vary in the range 10 to 500, depending on several factors like oil quality, moisture content, temperature, ageing, etc.. The ratio of relative permittivity for cellulose and oil is much smaller and close to two.

This means that in a steady state condition – with resistive voltage distribution – almost all stress from the DC potential will be across the solid insulation. On the other hand the AC and as well as a transient DC voltage will result in a capacitive voltage distribution with approximately double the stress across the oil as compared to solid insulation. The stress patterns for DC and AC voltages are indicated in figure 3.

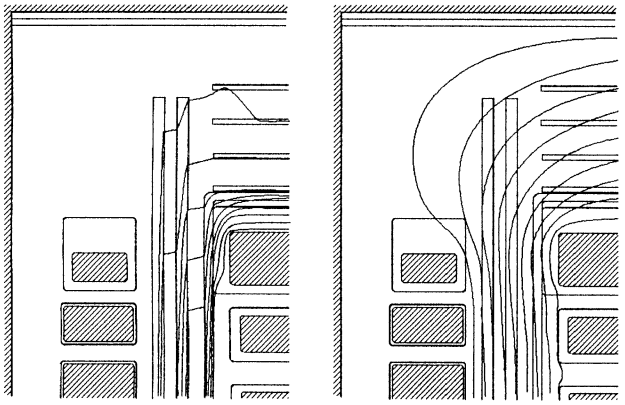

Figure 3: Stress distribution with DC voltage (left) and AC voltage (right) applied on the outer winding. DC voltage results in resistive and AC voltage in capacitive distributions

The differences in stress patterns must also be considered in the build-up of the insulation systems. In comparison between oil and cellulose (paper and pressboard) the insulation withstand strength for cellulose is considerably higher than for oil. This property has to be considered in the design of the insulation arrangements.

In AC insulation systems the amount of solid insulation is kept low. The conductors are covered by a fairly thin layer of paper in order to prevent bare metal surfaces to be exposed to oil. Further the major insulation is divided into a number of segments with short oil distances in the stress direction. It can be said that the solid insulation is not supposed to take up any voltage. An increase of solid insulation will result in a relative increase of the specific stress in the oil. As the stress in oil is a governing factor unnecessary amount of solid insulation is of no benefit.

In DC insulation systems on the other hand there is a considerable increase in solid insulation in order to avoid critical stress for steady state conditions. The number of barriers and their thickness are increased. Also the interconnection between the valve side windings and their bushings require additional paper covering.

In addition to the stress pattern caused by the steady state DC voltage and the normal AC voltage there are two transient phenomena for DC voltage to be considered. One is the normal start-up of the converter when full DC potentials from the bridges are developed almost instantaneously. The other is the so called polarity reversal. When the power direction changes in an HVDC system the current direction remains the same while the polarity of the voltage will be reversed. A polarity change can take place within a few number of power cycles which by the insulation system will be seen as instantaneously.

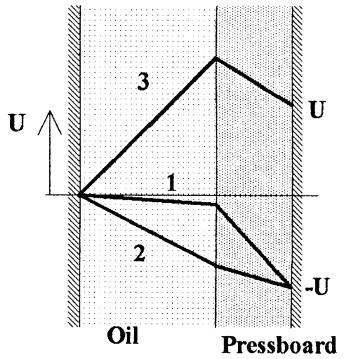

Figure 4: Stress pattern in an aggregate of oil and pressboard between two electrodes.
1. Steady state
2. Capacitive distribution of voltage -U after start up
3. Capacitive distribution immediately after polarity reversal from -U to +U

After a sudden change in DC voltage its distribution will be capacitive and it will by time change into a resistive distribution. The time constant for the transition from a capacitive to a resistive distribution is about an hour after the application of a step voltage.

Voltage pattern for steady state and immediately after voltage application and polarity reversal are shown in figure 4.

4. Losses

Like normal power transformers the operating losses can be split into two parts, no load loss and load losses. The no load loss is a function of the applied AC voltage and the load losses depend on the load current.

As the applied AC voltage in converter operation is governed by the line side voltage and close to a sinusoidal shape the no load loss will remain the same as for a normal power transformers.

The load losses are from the point of view of analyses divided into two components, one the so called RI^2-loss and the other the stray loss. The RI^2-loss is the loss component obtained as the product of the square of the load current, rms-value, and the winding resistance measured by DC-current.

The leakage flux from the load current will create circulating currents in the windings and other metallic parts exposed to the leakage flux. These currents give rise to the so called stray losses in addition to the losses derived from the product of winding resistance and the square of the rms-value of the load current.

The voltages driving the circulating currents depend on the rate of change in winding current and thus the leakage flux. With a more or less stepwise change in load current during the commutation from one valve to another the induced voltages will be fairly high and as a consequence there is an increase in stray losses compared to the sinusoidal currents in a conventional power transformer.

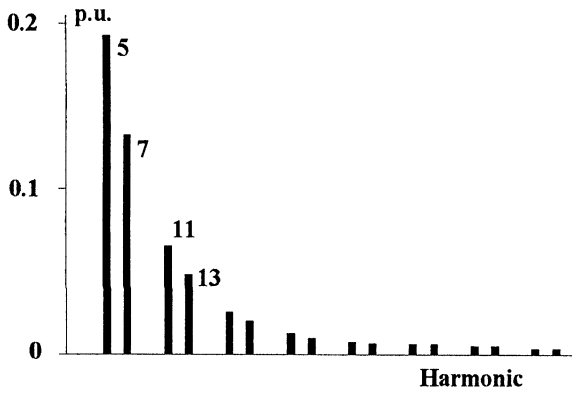

Figure 5: Characteristic distribution of current harmonics in relation to current fundamental.

For the estimation of the actual stray losses it is practical to split up the winding currents into their harmonics by a fourier analysis. The contribution from each one of the harmonics can then be evaluated. A characteristic distribution of current harmonics in the transformer windings is shown in figure 5 above.

The stray losses in the windings can be said to vary by the square of current magnitude for each harmonic and the square of the harmonic number, i.e. an 150 Hz current in a 50 Hz system - equal to the third harmonic - will increase the stray losses in the windings by a factor nine if the current magnitude remained the same.

The stray losses in structural components, especially if they are of ferromagnetic material, show a little less dependence on the frequency, instead of being proportional to the square of the harmonic number the relative increase has been found to be close to the power of 0.8.

In order to establish the contribution from stray losses in windings and structural parts it is practical to measure the load losses with two different frequencies, normal power frequency and one frequency at least three to four times the power frequency.

5. Short circuit impedance

The design of the transformer gives fairly large freedom in selection of short circuit impedance. For a given winding arrangement the impedance will be influenced by the core area and the winding height.

In addition to the property of being a major limitation of fault currents during a short circuit, the impedance is a governing factor for the rate of rise of valve current during the commutation from one valve to another.

Another specific requirement for converter transformer is the need for small differences in impedance between the three phases and the windings for the upper and lower bridge. Differences in impedance will give rise to residual currents between the three phases, residual currents which can act as DC magnetisation of the core.

6. Tap-changer and tapping range

Converter transformers have generally requirements for a large range of voltage variation. Tappings in the range of 25-30% are often common.

The taps shall primarily compensate for voltage variations in the supply network, where even more extreme operating conditions have to be compensated for. Further there is a need to compensate for the reactive voltage drop in the conversion between AC and DC. Small tap steps permit small variation in DC voltage, valve firing angles and reactive power demand.

In the tap changer the switch over from one tap to another is carried out by the diverter switch. In the switch over the current in the leaving tap has to be broken during the normal current zero passage.

For star-star connected windings it is normally not a problem as the current is zero for quite a long time. In the star-delta connected windings there is a more or less uninterrupted transition from winding currents of opposite directions. The short time the current is close to zero will put extra strain on the diverter switch, a condition which has to be considered by the tap changer manufacturer, see figure 6.

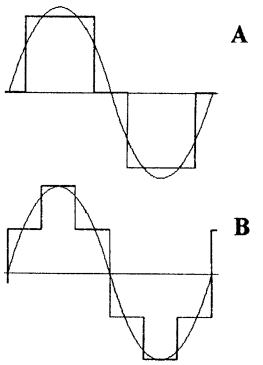

Figure 6: Line side currents for star-star connected windings (A) and star-delta connection (B)

7. DC-magnetisation

Under ideal operating conditions the positive and negative current pulses in the valve windings will balance each other and there is no steady state DC current into the transformer.

In reality there will always be a small residual current slowly oscillating around zero. This residual current will give rise to a quasi DC-magnetisation in the core. The DC-magnetisation is normally too small to be of any harm to the safe operation of the transformer and there will be only a marginal increase in the no load loss.

One dissatisfying effect of the DC-magnetisation is an increased sound level in the transformers, which has to be counteracted where sound is critical.

8. General design

Different transformer concepts are to be used depending on system voltages, AC as well as DC sides, throughput power, transport limitations, converter station layout, etc..

For medium power and voltage ratings three phase transformer units are viable. A three phase transformer is advantageous in amount of material, space needed in the transformer bay and somewhat lower losses especially the no load loss. With separate transformers for the two bridges the transformer output voltages shall have a phase angle difference of 30 degrees.

With the line side windings on the two transformers connected in star, one transformer will have its valve side windings connected in star and the other in delta. Full spare philosophy means that at least two spare units have to be provided for, one for each connection combination.

An alternate way for a 30 degree phase shift is the use of a so called extended delta connection, giving a 15 degree phase shift in relation to the incoming voltage. The advantage is that for three phase converter transformers the same transformer can be used for +15 as well as -15 degrees phase shift giving a total of 30 degrees. One spare only will then be necessary. The disadvantage with extended delta is few percent larger unit size and thus an increase in operating losses of the same range.

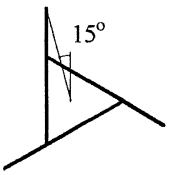

Figure 7: Valve side connected for extended delta gives 30 degrees phase shift for two transformers of the same design.

For increased converter sizes single phase units have to be used. A common design is the so called single phase three winding transformer with one line side winding and two valve side windings, one for star and the other for delta connection. The two valve side windings have the same power rating but with voltages differing by the factor $\sqrt{3}$. The transformers are built with two wound limbs with separate winding arrangements for each one of the two valve side windings.

This will give the same operating properties for the two windings as impedances and losses and in several operating aspects it can be considered as two independent transformers.

The line side windings on the two limbs will be connected in parallel. They are of the same design but with opposite winding directions to permit a mutual main flux. The core will have provision for the return of not balancing flux between the two winding arrangements, especially the leakage flux.

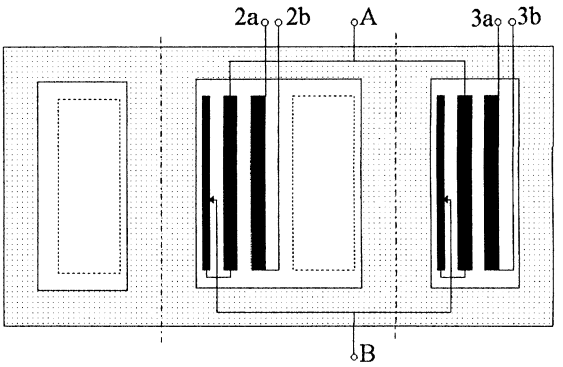

Figure 8: The two valve side windings, one for star connection and the other for delta connection are located on different limbs

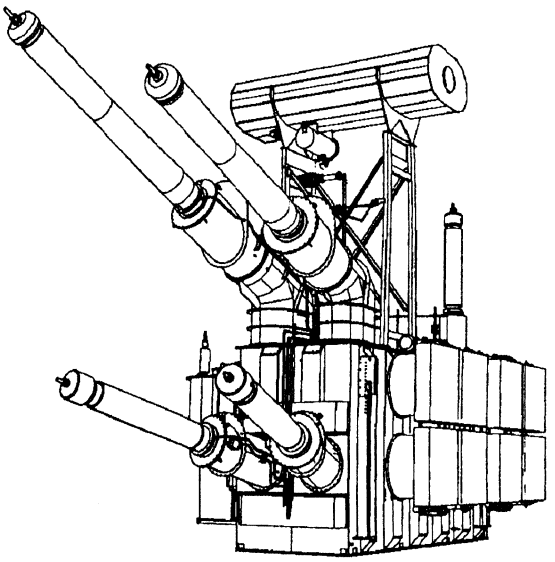

Figure 9: Large single phase three winding converter transformer with its valve side bushings mounted for entering the valve hall.

References:

E. Uhlmann. "Power transmission by direct current", Springer-Verlag, Berlin 1975

P. Hessen and W. Lampe. "Insulating problems in HVDC converter transformers." Direct Current, Vol. 2, No. 1, 1971

B. Wahlström et al. "Voltage tests on Transformers and smoothing reactors for HVDC transmission." CIGRE Working Group report WG12.02. ELECTRA NO. 46, May 1976

IEC 14/236/CDV "Converter transformers for industrial applications", draft