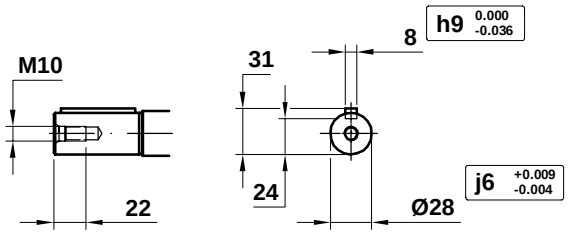

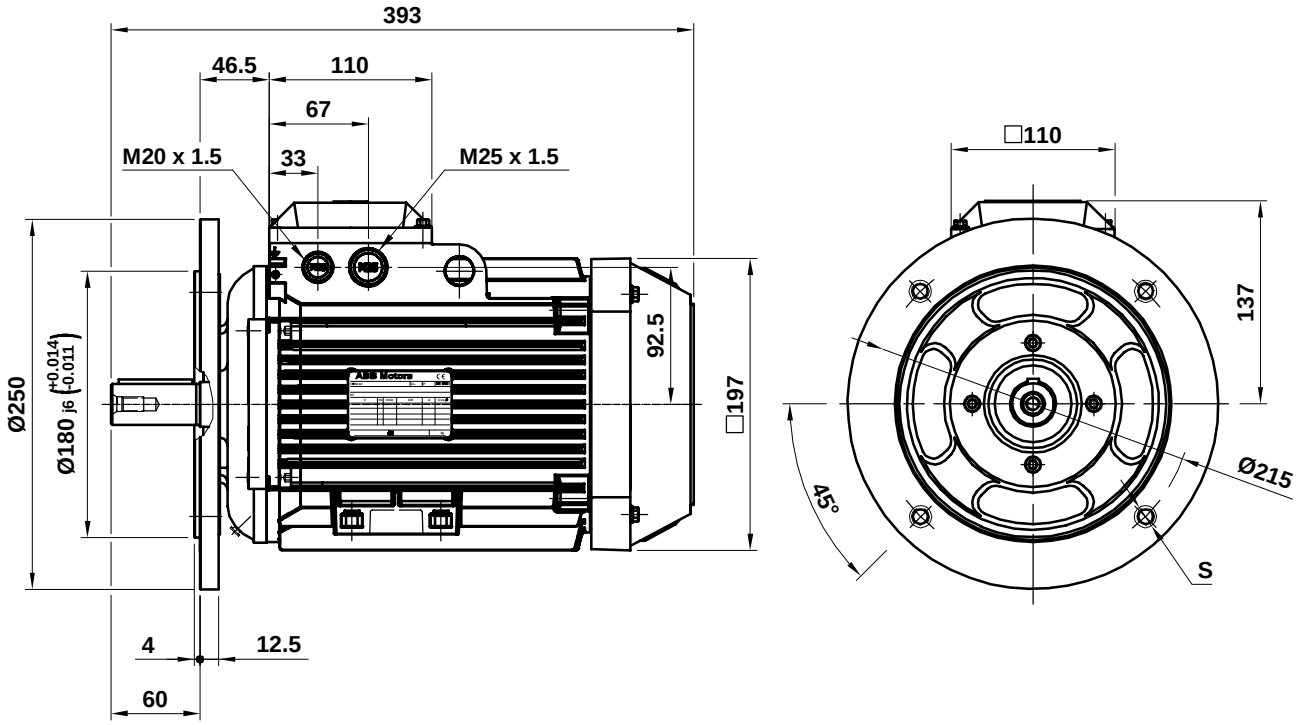

S = { Ø15 – Special IM 3001 / M12 – Special IM 3601 }

M2AA 112

(*) Except 112 MC

Additional information:

VC243: Flange ring FF 215 / Aro brida FF 215 // VC244: Flange ring FT 215 / Aro brida FT 215

Motor Dimension Print	Motor Type : M2AA 112 (*)	Document Nº : A1.5431 / 3D A2.5003
Description : Motor flange mounted special (2-pieces) IM3001 or IM3601 Motor con brida (2 piezas) IM3001 o IM3601		
Unit : Discret Automation & Motion - Fábrica Motores Date : 2012-12-12	Issued by : ERM/ L. Moreno Approved by : ERM/ G. Blanes	Replaces : To date 2012-02-13 Replaced by :
Asea Brown Boveri, S.A.	Customer Reference :	ABB