March 1995
Supersedes Descriptive Bulletin 41-728S, pages 1-2, dated November 1990
Mailed to: E, D, C/41-700B

Device Number: 24

CIRCUIT SHIELD ®

Type 59F Volts Per Hertz Relay

Application

The Type 59F volts per Hertz relay is used to protect generators and transformers against overexcitation. Volts per hertz is a measure of flux which must be kept constant to avoid saturation.

At low frequencies (such as during start-up), voltages must be limited to less than rated voltage at rated frequency, according to a constant volts per hertz relationship. This is basically derived from 120V (secondary) at 60 Hz or 2V/Hz. Then, at 30 Hz, the relay will operate if the voltage is greater than 60V.

The Type 59F relay contains 2 normally open output contacts, one for alarm and one for tripping. The contact between terminals 11 and 12 closes immediately upon a volts/Hz condition above the pickup setting of the relay. If the condition persists for a period of time greater than the time delay setting, the contacts between terminals 13 and 14 also close. The time delay characteristic is "definite time."

Features

- Continuously adjustable pickup
- 15 to 72 hertz frequency range
- Output delay: 1-60 sec. or 0.5-15 sec.
- Separate instantaneous output
- Seismic capability to 6g ZPA
- Transient immunity
- Drawout construction
- 2 year warranty

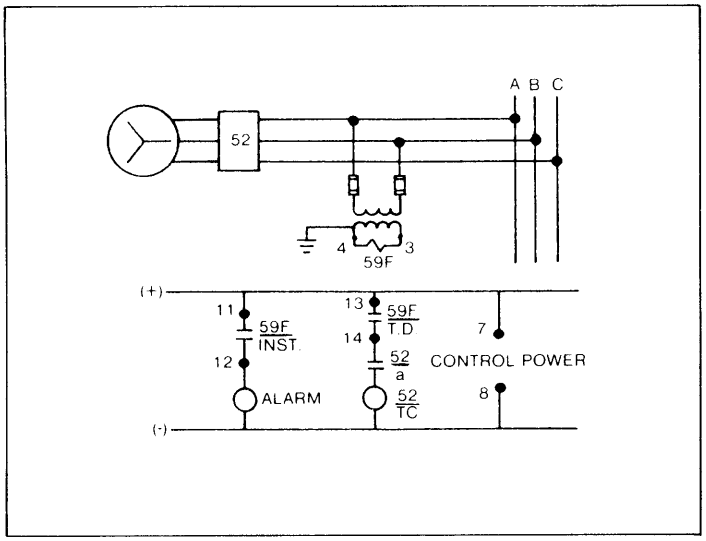

Typical Connections for Type 59F

Specifications

Pickup Range:	1.8 to 3.0 Volts/Hertz, continuously adjustable
Time Delay:	1 to 60 sec or 0.5 to 15 sec. continuously adjustable
Frequency Range:	15 Hz to 72 Hz
Input Circuit Rating:	45 Volts @ 15 Hz, continuous 180 Volts @ 60 Hz, continuous 216 Volts @ 72 Hz, continuous
Burden:	.01 VA @ 1.0 P.F., any setting
Control Power:	Dual rated, 48/125 VDC, .08A max. 48/110 VDC, .08A max.
Output Circuit:	Tripping — 1 form A contact (delayed) Alarm — 1 form A contact (no delay)
Output Rating:	Each contact
@ 125 Vdc:	30 Amps, Tripping Duty 5 Amps, Continuous 1 Amp, Opening, Resistive 0.3 Amp, Opening Inductive
Operating Temperature:	Minus 20°C to plus 70°C
Seismic Capability:	More than 6g ZPA either AXIS biaxial broadhead multifrequency vibration without damage or malfunction ANSI/IEEE C37.98
Transient Immunity:	More than 2500V, 1MHz bursts at 400 Hz repetition rate, continuous (ANSI C37.90a SWC); Fast Transient Test; EMI test.
Weight:	Unboxed — 3.4 lbs. (1.5 Kg) Boxed — 4.1 lbs. (1.8 Kg)
Volume:	— 0.26 cubic feet

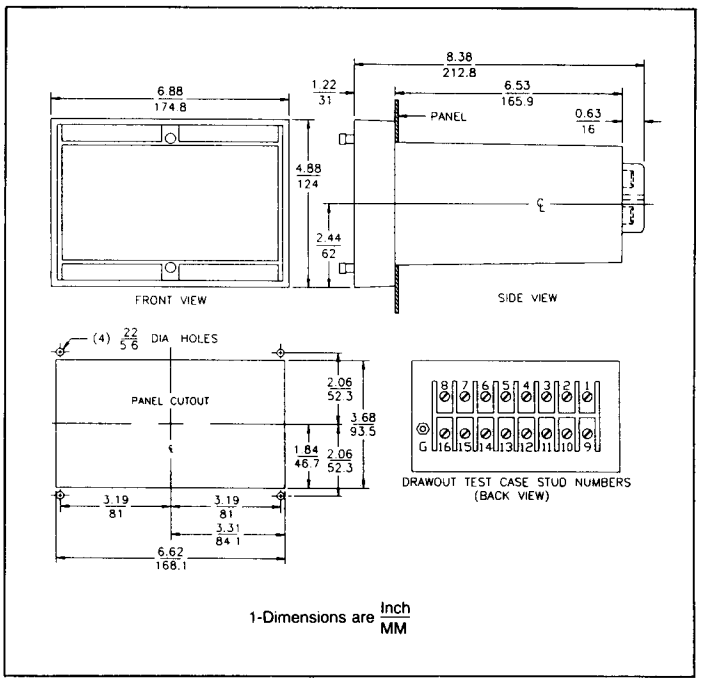

Case Outline and Drilling (Inches)

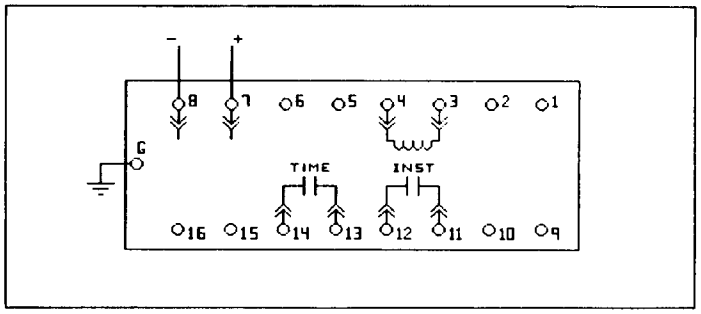

Internal Connections (Rear View)

How to Specify

Volts per hertz relay for generator or transformer overexcitation protection: Relay shall be Asea Brown Boveri Type 59F or approved equal, drawout case, capable of withstanding up to 6g ZPA seismic stress without damage or malfunction regardless of settings. Relay shall have minimum setting of 1.8 volts/hertz and maximum setting of 3.0 volts/hertz. Relay shall have an instantaneous contact output and a separate time delayed contact output. Built-in means shall be provided to allow operational tests without additional equipment.

How to Order

For a complete listing of available versions of other voltage relays see TD 41-025.

Models are available for 48 or 125 Vdc control power and 120 Vac potential transformers. For other control voltages contact the nearest ABB Representative.

To place an order, or for further information, contact the nearest ABB Representative.

Further Information

List Prices: PL 41-020
Technical Data: TD 41-025
Instruction Book: IB 7.4.1.7-8
Synchronous Generator Protection: AN 41-725S
Other Protective Relays:
Application Selector Guide, TD 41-016

Printed in U.S.A.

November, 1990
Supersedes Section 7.4.0.3, Type 59F on pages 4 and 5, dated January 1, 1990
Mailed to: E, D, C/41-700B

CIRCUIT SHIELD ®

Type 59F Volts Per Hertz Relay

Type	Max. Voltage Rating	Pickup			Output Contacts	Internal Connections	① Control Voltage	Catalog Number
		Tap Range	Curve	Time				
59F	3V/Hz 15-72 Hz	1.8-3.0V/Hz	Definite and Inst.	1-60 sec.	2-A	16D211L	48/125 Vdc	411H4176
				0.5-15 sec.			48/110 Vdc	411H4106
							48/125 Vdc	411H6176
							48/110 Vdc	411H6106

① For other control voltages contact the nearest District Office.

To place an order, or for further information, contact the nearest District Office.

Internal Connection Diagram

Note: Refer to Instruction Book IB 7.4.1.7-8② for contact logic data.

② Available upon request, only from Allentown Plant.

16D211L Type 59F
Volts per Hertz Relay
Drawout Test Case