Shunt reactor protection

General

Fixed reactors are used in HV and EHV systems to limit the overvoltages due to capacitive VA_r generation in cables and -long overhead lines.

The chunt reactors are normally connected

a) directly or with disconnect switches to a line

b) with circuit-breakers to a bus-bar

c) with circuit-breakers to the tertiary winding of a power transformer (see Fig 1)

The neutral of the shunt reactor can be directly grounded or grounded via a neutral reactor. When connected to the power transformer tertiary winding, the neutral of the shunt reactor is normally ungrounded or grounded through an impedance.

Switching-in currents

The switching-in current of a reactor of shell type is shown in Fig 2. The current can contain a large d.c. component of long duration, but the content of harmonic currents is small.

The switching-in current of a reactor of core type is shown in Fig 3. The switching-in current can contain a d.c. component of long duration. It also contains a large amount of harmonic currents.

The magnitude and nature of the switching-in currents should be taken into consideration when selecting type of reactor protective relays and determining their setting.

Overvoltages

Overvoltages of up to 20 per cent are normally taken into consideration when deciding the setting of the over-current relays. For direct grounded reactors, the increment of the voltage to ground in healthy phases in case of ground faults must also be considered.

Relay protection

1. Phase short-circuit protection

For the shell type of reactors, a 3-phase o/c relay type RXIDF with instantaneous and time-lag function is used. The relay is insensitive to the d.c. component in the switching-in current and has a resetting ratio of 95 per cent.

Typical settings:

Instantaneous step: $1.7 \times I_L$

Time-delayed step: $1.3 \times I_L$

$t = 0.4$ s

I_L = rated load current

For the core type of reactors static o/c relays type RXIG 22 are used. The relay is insensitive to the d.c. component in the current and has a resetting ratio of 97 per cent. The measuring circuit has a filter which strongly increases the operating value of the relay for harmonic currents, see Fig 4.

Typical settings:

Instantaneous step: $2 \times I_L$

Time-delayed step: $1.3 \times I_L$

$t = 0.6$ s

Each phase winding is placed on a separate reactor limb. Phase short-circuits are therefore not expected to possibly occur between windings near the neutral, and a sensitive phase short-circuit differential protection is normally not included.

2. Earth-fault protection

The restricted differential relay type RADHD provides a fast and sensitive earth-fault protection. The primary operating current is normally 2-4 per cent of the rated reactor load current. The relay operating time is 15 milliseconds for a fault current equal to twice the relay operating value.

Current transformers with identical current ratio are required on the H.V. side and in the neutral. The connection diagram for the relay is shown in Fig 6.

For reactors in ungrounded or high impedance grounded circuits, a neutral voltage relay is used to provide earth-fault protection.

Interturn protection

Interturn faults are difficult to detect. For oil-type of reactors, the pressure (Bucholz) relay provides an acceptable protection.

Intertripping

Reactors connected to a line are to some extent protected by the distance relays. However, separate protective relays should be included which trip the reactor (and the line) in case of reactor faults not seen by the distance relays. The reactor protective relays should also trip the circuit-breaker at the distant end of the line (intertripping).

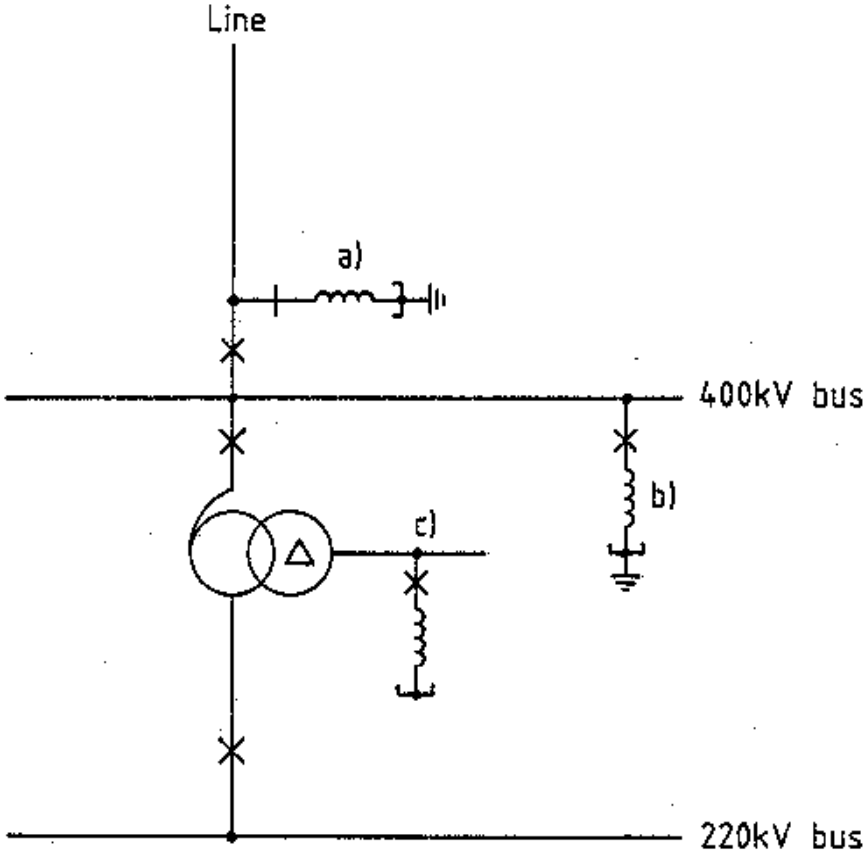

Fig 1: Example on alternative connection of a shunt reactor to a network

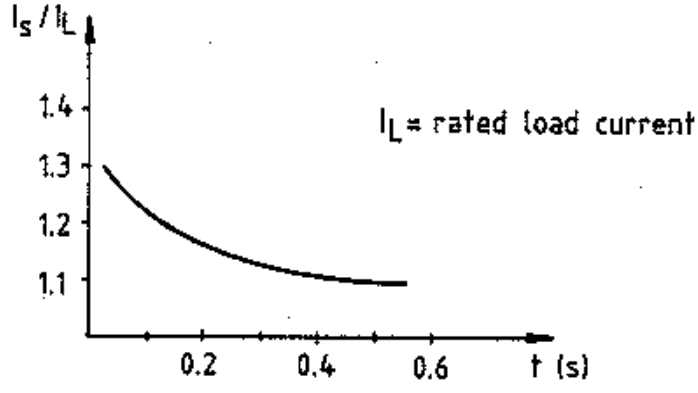

Fig 2: Switching-in characteristic of shell type of reactor

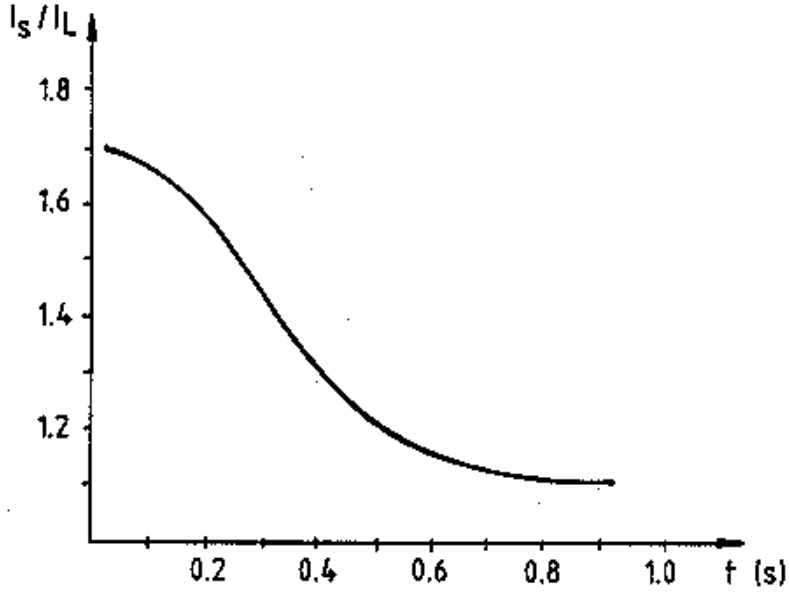

Fig 3: Switching-in characteristic of core type of reactor

The graph shows the r.m.s value of the a.c. component (basic + harmonics)
The d.c. component is not included
The graph shows the max value obtained for 20 switching-in actions at 10 per cent overvoltage

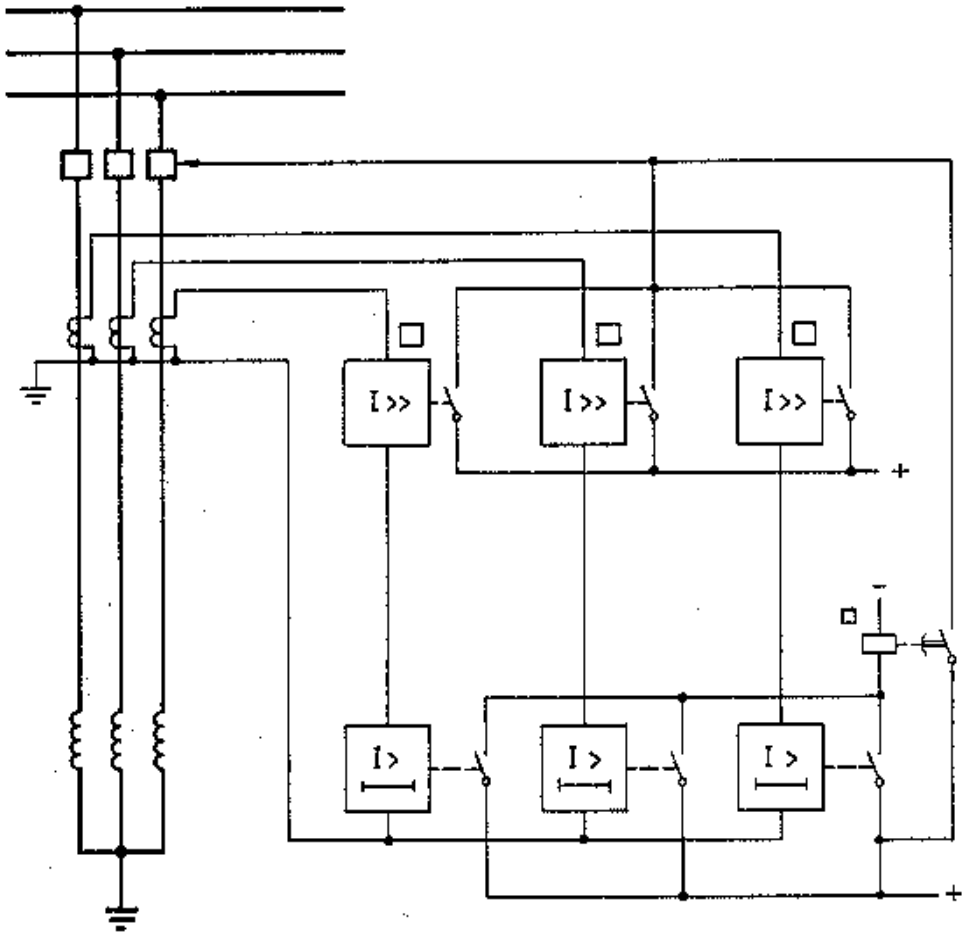

Fig 4: Two-step, 3-phase over-current relay
with RXIG 22 for core type shunt reaktor.

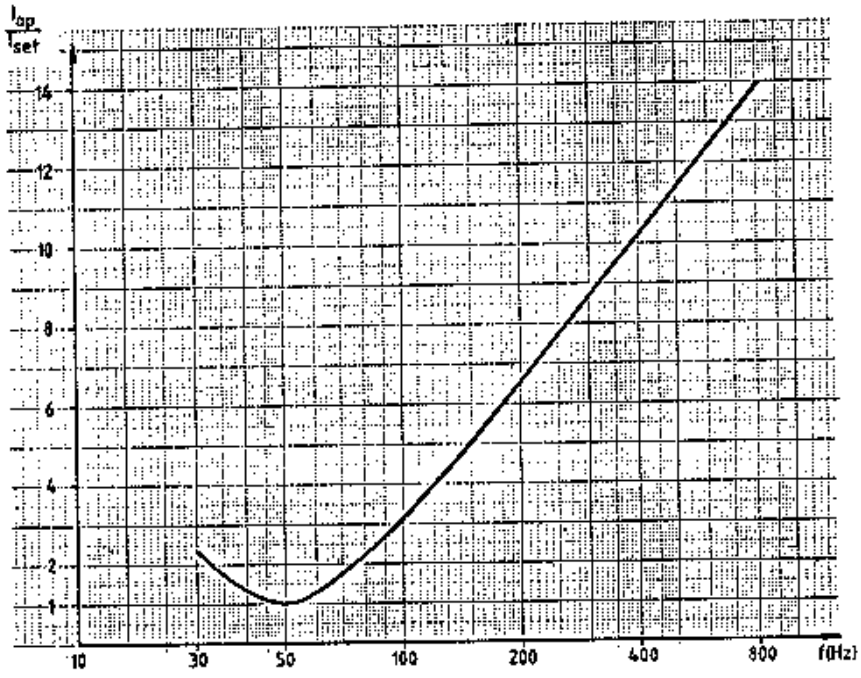

Fig 5: Frequency characteristic of RXIG 22

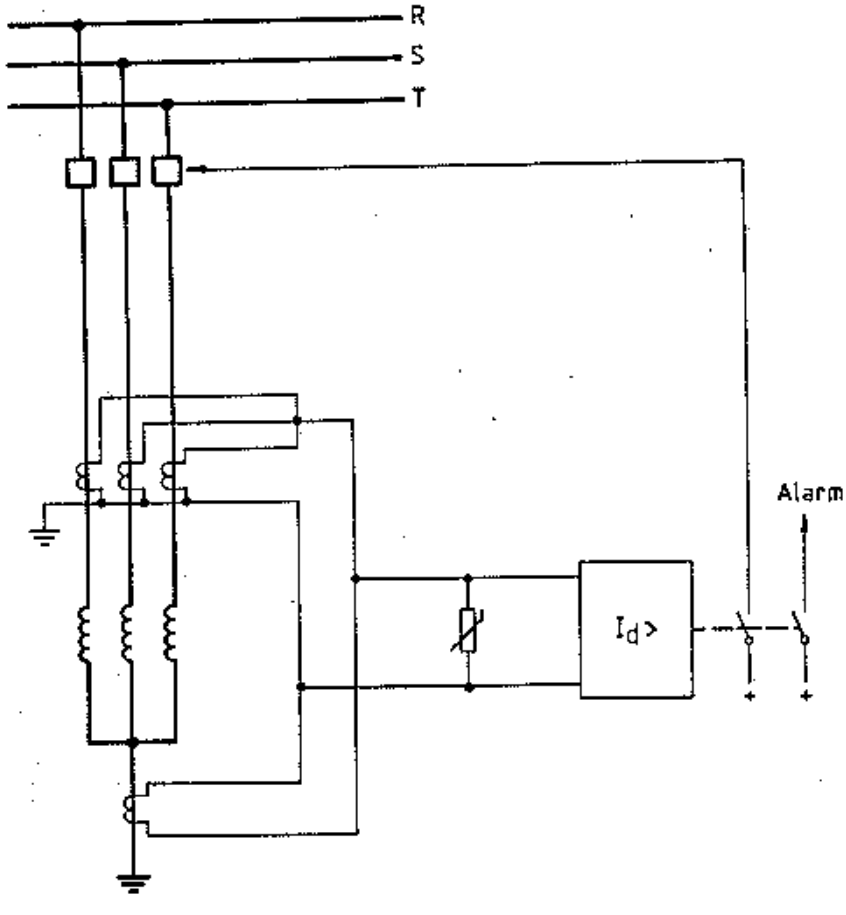

Fig 6: Differential earth-fault relay RADHO for shunt reactor.