INSTRUCTIONS

GEI-88771 D
Supersedes GEI-88771 C

MAGNE-BLAST CIRCUIT BREAKER

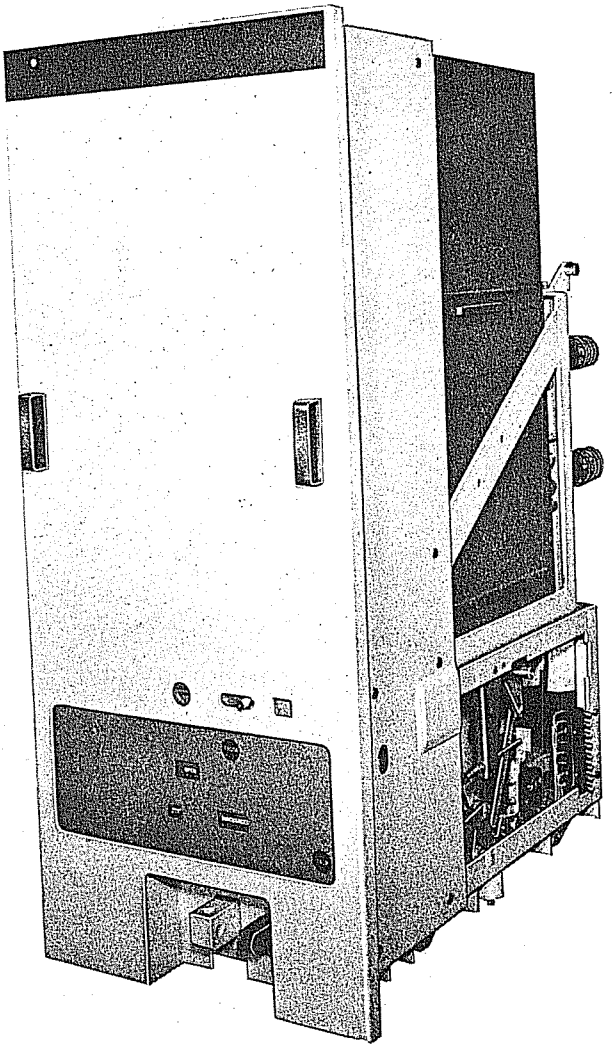

TYPE

AMH-4.76-250-0D
AMH-4.76-250-1D

GENERAL ELECTRIC

MAGNE-BLAST CIRCUIT BREAKER
AMH-4.76-250-0D AMH-4.76-250-1D

INTRODUCTION

The magneblast breaker is the removable and interchangeable interrupting element used in metal-clad switchgear to provide reliable control and protection of electrical apparatus and power systems.

The AMH-4.76-250 Magneblast Breaker is available with continuous current ratings of 1200 amperes and 2000 amperes in accordance with applicable industry standards. Refer to the breaker nameplate for complete rating information of any particular breaker. The nameplate also describes the control power reauirements for that breaker. The application of a breaker must be such that its voltage, current, and interrupting ratings are never exceeded. Since this book is written to include all ratings of the breaker as well as several design variations, the instructions will be of a general character and all illustrations will be typical unless otherwise specified.

PROPER INSTALLATION AND MAINTENANCE ARE NECESSARY TO INSURE CONTINUED SATISFACTORY OPERATION OF THE BREAKER. The following instructions will provide complete information for placing magne-blast breakers in service and for maintaining satisfactory operation.

RECEIVING, HANDLING AND STORAGE

Receiving and Handling

Each breaker is carefully inspected and packed for shipment. Immediately upon receipt of the circuit breaker, an examination should be made for any damage sustained in transit. If injury or rough handling is evident, a damage claim should be filed immediately with the transportation company and the nearest General Electric Sales Office should be notified.

It is expected that due care will be exercised during the unpacking and installation of the breaker so that no damage will occur from careless or rough handling, or from exposure to moisture or dirt. Check all parts against the packing list to be sure that no parts have been overlooked.

Storage

It is recommended that the breaker be put into service immediately in its permanent location. If this is not possible, the following precautions must be taken to insure the proper storage of the breaker:

1. The breaker should be carefully protected against condensation, preferably by storing it in a warm dry room, since water absorption has an adverse effect on the insulation parts. Circuit breakers for outdoor metal-clad switchgear should be stored in the equipment only when power is available and the heaters are in operation to prevent condensation.

2. The breaker should be stored in a clean location, free from corrosive gases or fumes; particular care should be taken to protect the equipment from moisture and cement dust, as this combination has a very corrosive effect on many parts.

3. Unfinished surfaces of rollers, latches etc., of the operating mechanism should be coated with grease to prevent rusting.

If the breaker is stored for any length of time, it should be inspected periodically to see that rusting has not started and to insure good mechanical condition. Should the breaker be stored under unfavorable atmospheric conditions, it should be cleaned and dried out before being placed in service.

(Cover photo 8037386)

These instructions do not purport to cover all details or variations in equipment nor to provide for every possible contingency to be met in connection with installation, operation or maintenance. Should further information be desired or should particular problems arise which are not covered sufficiently for the purchaser's purposes, the matter should be referred to the General Electric Company.

To the extent required the products described herein meet applicable ANSI, IEEE and NEMA standards; but no such assurance is given with respect to local codes and ordinances because they vary greatly.

INSTALLATION

1. Remove the top cover and box barrier. Do not remove side or front covers. (See note under Repair and Replacement, page 22.) Make a visual inspection to ascertain that the breaker and mechanism is in satisfactory condition. Check all bearing surfaces of the mechanism for lubrication. Refer to section on lubrication page 18 and Figure 16.

2. Charge the breaker closing springs manually using a 5/8" ratchet wrench to turn the manual charging shaft (3) Figure 1. Turning the shaft counter clockwise will advance the ratchet wheel and compress the springs.

   When the springs have reached the fully charged position the indicator (5) Figure 2 will read "CHARGED", and the driving pawl will be raised from the ratchet wheel teeth. Additional turning of the charging shaft will not advance the ratchet wheel.

   Insert the spring blocking devices into a hole (2) Figure 1 on each side of breaker, and manually discharge the springs against the pins by pushing the manual close button (6) Figure 2. The springs are now blocked and slow closing of the breaker contacts can be accomplished by again turning the manual charging shaft with a 5/8" ratchet wrench.

   During the slow closing operation check to insure that the mechanism does not stick or bind during the entire stroke, that it latches securely in the closed position, and that it trips freely when the manual trip lever is operated. At this time, also check the following adjustments:

   a. Arcing contact wipe (Refer to page 12).
   b. Primary contact wipe (Refer to page 13).
   c. Primary contact gap (Refer to page 13).

   DO NOT WORK ON EITHER THE BREAKER OR MECHANISM UNLESS THE CLOSING SPRINGS ARE BLOCKED AND THE OPENING SPRINGS HAVE BEEN TRIPPED OPEN OR MECHANICALLY BLOCKED. THIS PRECAUTION IS REQUIRED TO PREVENT ACCIDENTAL CLOSING OR TRIPPING.

   The closing springs should now be unblocked. Rotate the charging shaft until the indicator reads "CHARGED" and the ratchet wheel does not advance. The spring blocking devices can now be removed.

3. Connect the test coupler to the right hand secondary coupler or insert the breaker into the metalclad housing to the test position. Operate it electrically several times. Check the control voltage as described under "CONTROL POWER CHECK" (Page 16).

4. Disconnect the test coupler, or remove breaker from housing, and replace box barrier and top cover.

5. If the breaker has been stored for a long period of time, it is recommended that the insulation be checked with a standard 60 Hertz high potential test. Refer to Insulation Test (Page 18).

   NOTE: If the breaker secondary wiring is to be given a hi-potential test at 1500 volts, remove both the motor leads from the terminal connection. Failure to disconnect the motor from the circuit may cause damage to the winding insulation.

6. Lubricate the inside silver portion of the primary disconnect fingers by applying a thin film of contact lubricant D50H47. The lubricant should extend approximately one inch (1") from the end of the finger.

7. Refer to metal-clad instruction book GEI-88775 for instructions on inserting the breaker into the metal-clad unit.

DESCRIPTION OF OPERATION

The Magneblast Breaker has two principal components; the breaker element and the operating mechanism:

The breaker element is three similar pole units, each of which includes the current carrying parts, main and arcing contacts, interrupter, and an enclosing barrier system that provides insulation between poles, or phases and to ground. The primary connections to the associated metal-clad switchgear are made through the primary disconnect fingers at the rear of the breaker.

The operating mechanism type ML-13A is of the stored energy type designed to give high speed closing and opening. The mechanism will operate on a-c or d-c voltage as indicated on the breaker nameplate. Closing and opening operations are controlled either electrically from the metal-clad unit and remote location, or mechanically by the manual close and trip buttons on the breaker. All secondary connections from the breaker to the metal clad unit are made through the coupler (1) Fig. 3.

A spring release interlock, Fig. 4 is provided to discharge both the closing and opening springs when the breaker is withdrawn from or inserted into the Metal Clad unit.

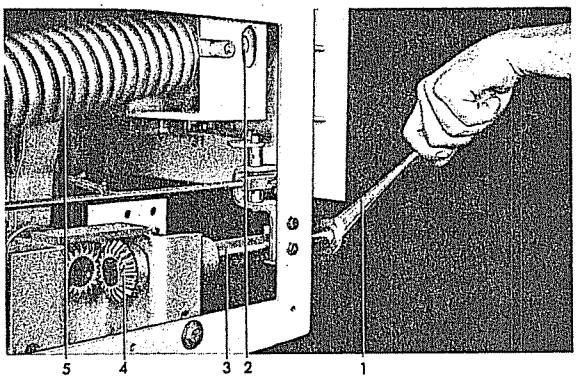

Fig. 1 (8037382) Manual Charging

1. Manual Charging Wrench
2. Hole for Spring Blocking Pin
3. Manual Charging Shaft
4. Bevel Gears
5. Closing Spring

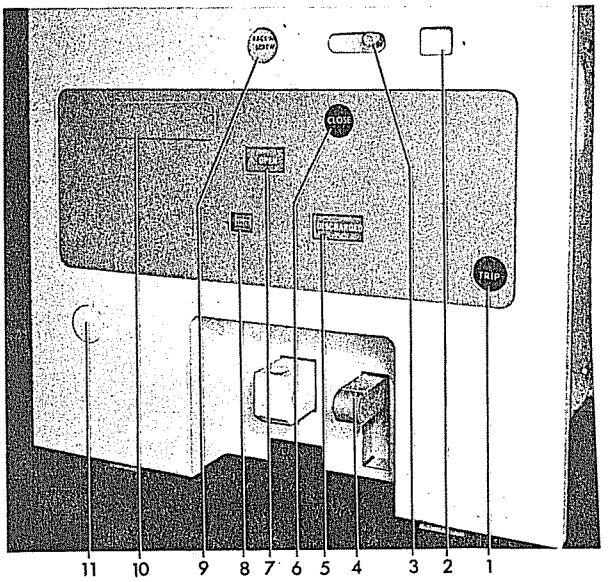

Fig. 2 (8037380) Control Panel

1. Trip Button
2. Position Indicator
3. Racking Screw Shutter
4. Position Stop Release
5. Charge-Discharge Indicator
6. Close Button
7. Open-Close Indicator
8. Operation Counter
9. Racking Screw Hole
10. Padlock Hole Cover
11. Hand-Charge Hole Cover

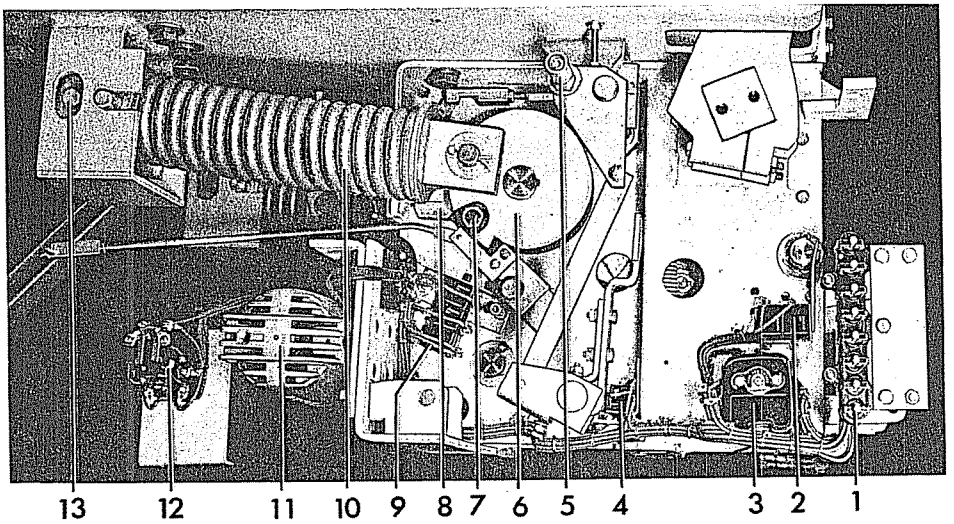

1. Secondary Coupler
2. Interlock Switches
3. Auxiliary Switch
4. Latch Checking Switch
5. Spring Discharge Roller
6. Switch Cam
7. Closing Latch Roller
8. Closing Latch
9. Power Switches
10. Closing Spring
11. Motor
12. Control Relay
13. Spring Blocking Pin

Fig. 3 (8037375) Right Side View ML-13A Operating Mechanism

1. Spring Discharge Stop
2. Spring Discharge Roller
3. Spring Discharge Crank
4. Turnbuckle
5. Closing Latch Stop
6. Spring Discharge Stop
7. Trip Link
8. Closing Latch Roller
9. Switch Cam
10. Switch Striker
11. Switch Support Bolt
12. Switch Support
13. Power Switches
14. Closing Latch
15. Switch Support Bolt
16. Motor Terminal Board
17. Closing Latch Shaft
18. Closing Latch Spring
19. Motor
20. Latch Monitoring Switch
21. Latch Switch Support
22. Spring Release Solenoid
23. Closing Coil Support

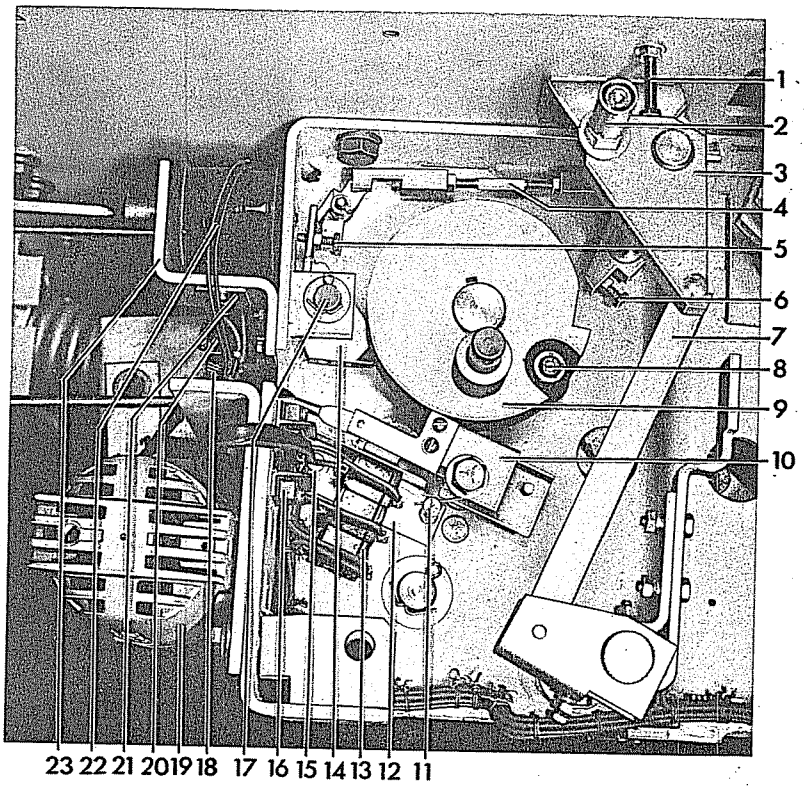

Fig. 4 (8037379) Control Mechanism and Spring Discharge Link

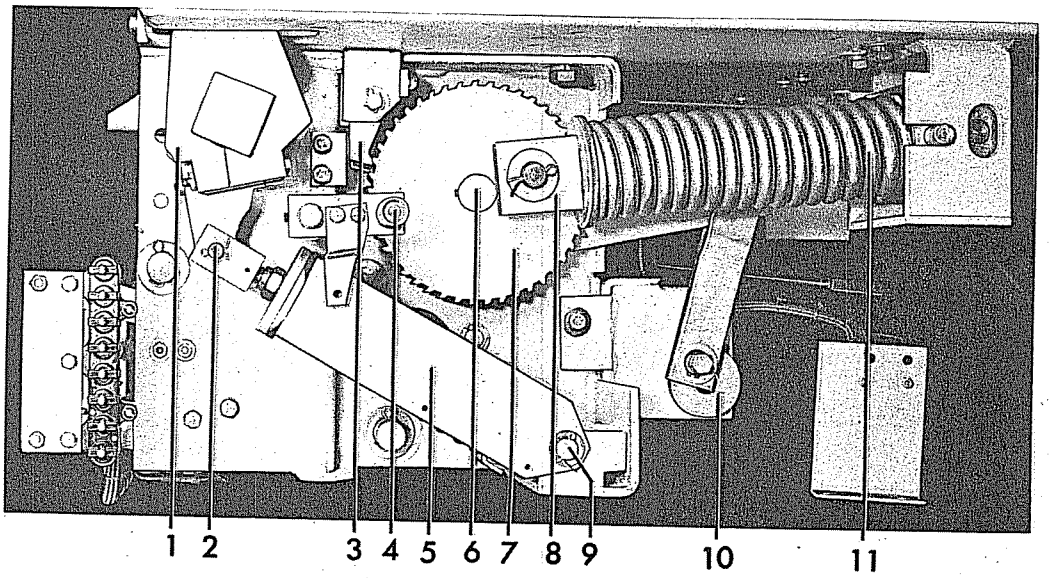

Fig. 5 (8037377) Left Side View ML-13A Operating Mechanism

1. Main Shaft Bearing
2. Rear Spring Pin
3. Latching Pawls
4. Positive Interlock Roller
5. Opening Spring
6. Cam Shaft
7. Ratchet Wheel
8. Guide Block
9. Front Spring Pin
10. Eccentric
11. Closing Spring

A positive interlock (4) Figure 5 and interlock switch (2) Figure 3, are provided between the breaker and metal-clad unit and work with the rack screw shutter to prevent insertion or removal of the breaker in the unit while in a closed position and to prevent a closing operation when the breaker is not in either the fully connected or test position. To insure that this interlock will function during manual, as well as during electrical operation of the equipment, both mechanical and electrical blocking is provided. If for any reason the closing springs should be discharged against the positive interlock the mechanism will be jammed and be inoperable. The mechanism can be released and returned to the reset position by pushing in on the trip lever (1) Figure 2. It may require more than normal force to release the interlock.

An auxiliary switch operator (3) Figure 6 can be provided when required to operate a stationary auxiliary switch mounted in the metal clad unit.

Spring Charging

The mechanism has a high speed gear motor (1) Figure 7, that compresses a set of closing springs through the action of an eccentric, ratchet, and pawl assembly. The rotary action of the motor is converted to a straight stroke through the eccentric (5), and a lever (6) that carries a spring loaded driving pawl.

The pawl advances the ratchet wheel (7) Figure 5 a few degrees each stroke where it is held in position by the latching pawls (3). When the ratchet wheel has been rotated approximately 180 degrees the closing springs (11) will be fully compressed. As the ratchet wheel continues to rotate, the spring load will shift over center and attempt to discharge. After a few degrees of rotation, the closing roller (7) Figure 3, will engage the closing latch(8) and the compressed springs will be held by the latch until a closing operation is required. During the last few degrees of the ratchet wheel rotation the power switches (9) are opened and the driving pawl is raised from the ratchet wheel surface. This allows the motor and driving mechanism to coast to a natural stop expending all residual energy.

During the time the springs are being compressed a relay (12) is energized to hold the closing circuit open. The relay remains energized until the springs are fully charged and the control switch contacts are re-set.

The closing springs may be charged manually if control voltage is lost. A 5/8" ratchet wrench can be used to rotate the manual charging shaft in a counter clockwise direction until the indicator reads "Charged" and the driving pawl is raised from the ratchet wheel. The use of the ratchet wrench provides for maximum safety in the event that the control power is suddenly restored without warning. In this event, the motor drive will override the ratchet wrench and continues to charge the springs.

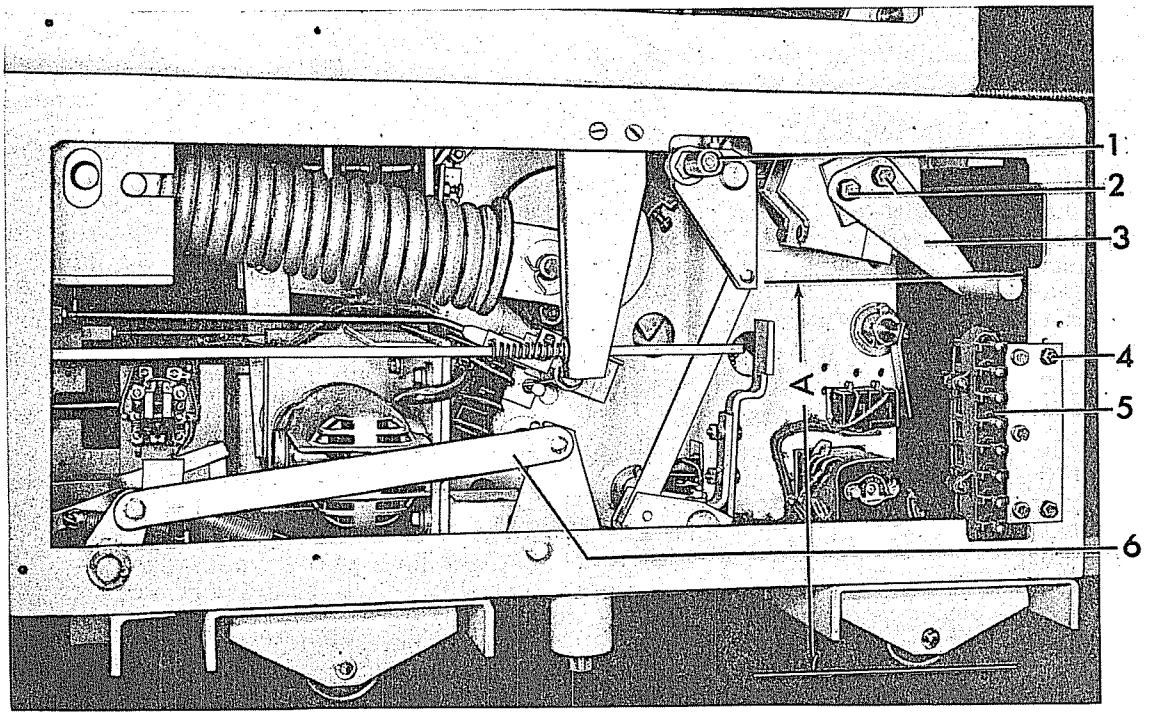

Fig. 6 (8037376) Auxiliary Switch Operator

1. Spring Discharge Crank
2. Mounting Bolts
3. Auxiliary Switch Operator
4. Mounting Bolts
5. Secondary Disconnect
6. Treadle Link

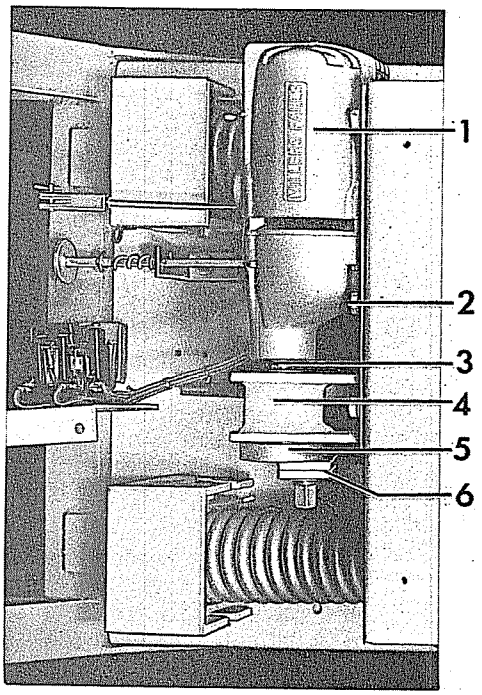

1. Motor
2. Mounting Bolt
3. Retaining Ring
4. Motor Mount
5. Eccentric
6. Driving Link

Fig. 7 (8037378) Driving Elements)

Closing Operation

The breaker can be closed electrically by energizing the spring release solenoid (22) Figure 4, or manually by pushing the close button (6) Figure 2. In either method the closing latch is rotated from under the closing roller to release the closing springs (10) Figure 3. The energy in the springs is used to rotate a cam (16) Figure 8 and close the breaker through the operating mechanism linkage. During the closing operation the mechanism is trip-free at all times. The breaker is held closed by the closing prop (14) moving into position under the prop pin (13). During the closing operation the opening springs (17) Figure 9, are compressed and held ready for an opening operation with the trip latch (8) Figure 8 bearing against the trip latch roller (9).

When the closing operation of the breaker is completed and the closing latch is fully reset, the contacts of the latch monitoring switch (20) Figure 4, closes to permit the spring charging motor to be energized and recharge the closing springs.

Opening Operation

The breaker can be opened either electrically by energizing the trip coil (13) Figure 9, or manually by pushing the trip lever (1) Figure 2. In each method the trip latch is rotated off the trip latch roller, permitting the operating mechanism linkage to collapse. The energy stored in the opening springs is released to provide the required opening speed for successful interruption of the circuit.

As the breaker opens to interrupt a current, the arc first starts at the arcing contacts (6 & 27) Figure 10, transfers to the arc runner (4 & 10) and energizes the blow-out coils (3 & 11). This action introduces a magnetic field between the pole pieces 5 & 9) of the interrupter that forces the arc deeper into the arc chute (8). At the time the arcing contacts part a discharge of air is expelled through the booster tube (28) across the arc. This air flow assists the arc transfer and interruption by blowing the arc away from the contacts and into the arc chute. The magnetic field forces the arc deeper into the interrupter along the diverging arc runners.

The arc chute has a series of interleaving ceramic fins, Figure 18. As the arc is forced into the interrupter it is lengthened in the gradually deepening serpentine path between the fins so that the electrical resistance of the arc is rapidly increased and its heat is absorbed by the ceramic material. The increased resistance reduces the nagnitude and phase angle of the current and at an early current zero the arc cannot re-establish itself and interruption occurs.

Trip Free Operation

If the trip coil circuit is energized while the breaker is closing, the trip armature will force the trip latch (8) Figure 8 away from the trip

roller (9) causing the mechanism linkage to collapse and the breaker to re-open. The closing cam (16) will complete its closing stroke and the springs will re-charge as in a normal closing operation.

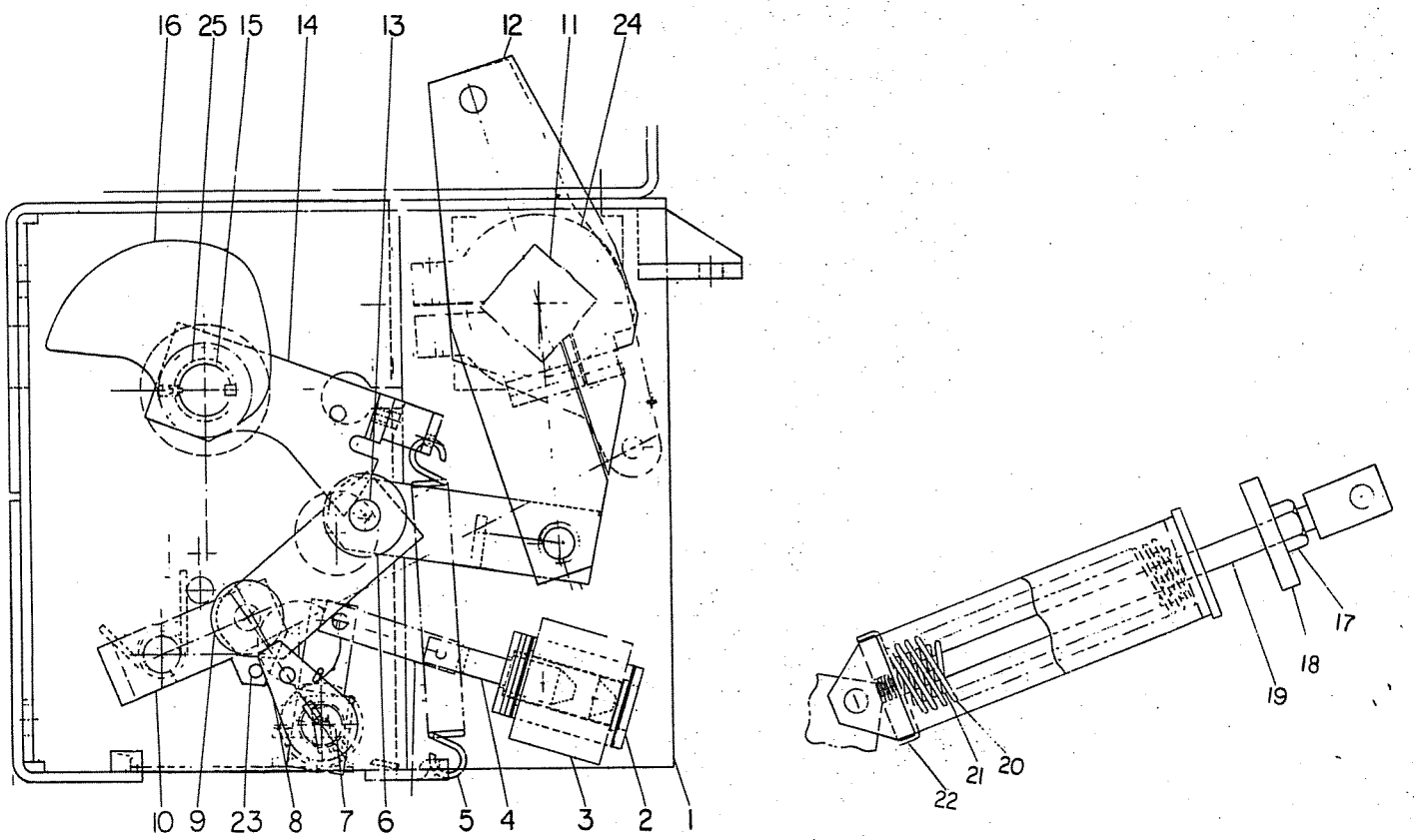

Fig. 8 (0121C8152) Sectional Side View of Mechanism

1. Frame
2. Trip Coil Support
3. Trip Coil
4. Trip Armature
5. Prop Reset Spring
6. Cam Follower Roller
7. Trip Shaft
8. Trip Latch
9. Trip Latch Roller
10. Trip Latch Roller Support
11. Crank Shaft
12. Cranks
13. Prop Pin
14. Prop
15. Drive Shaft
16. Cam
17. Check Nut
18. Stop Plate
19. Spring Rod
20. Spring
21. Spring
22. Spring Guide
23. Stop Pin
24. Main Shaft Bearing
25. Cam Shaft Bearing

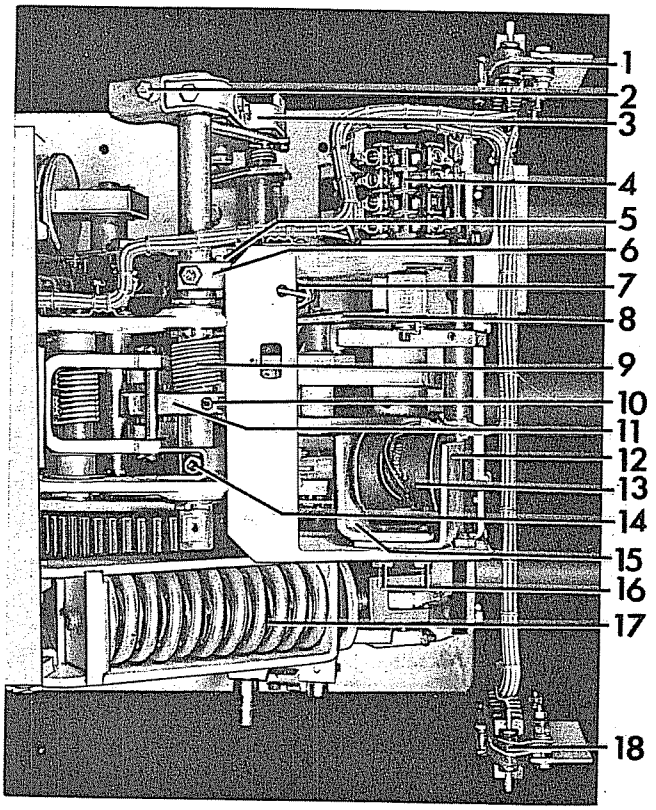

Fig. 9 (8037378) Bottom View of ML-13A Operating Mechanism

1. Secondary Disconnect
2. Trip Adjusting Nut
3. Manual Trip Lever
4. Auxiliary Switch
5. Latch Check Switch
6. Latch Check Switch Arm
7. Prop Spring
8. Auxiliary Switch Link
9. Trip Latch Spring
10. Latch Set Screw
11. Trip Latch
12. Trip Coil Support
13. Trip Coil
14. Trip Arm Screw
15. Trip Coil Support
16. Coil Mounting Bolts
17. Opening Springs
18. Secondary Disconnect

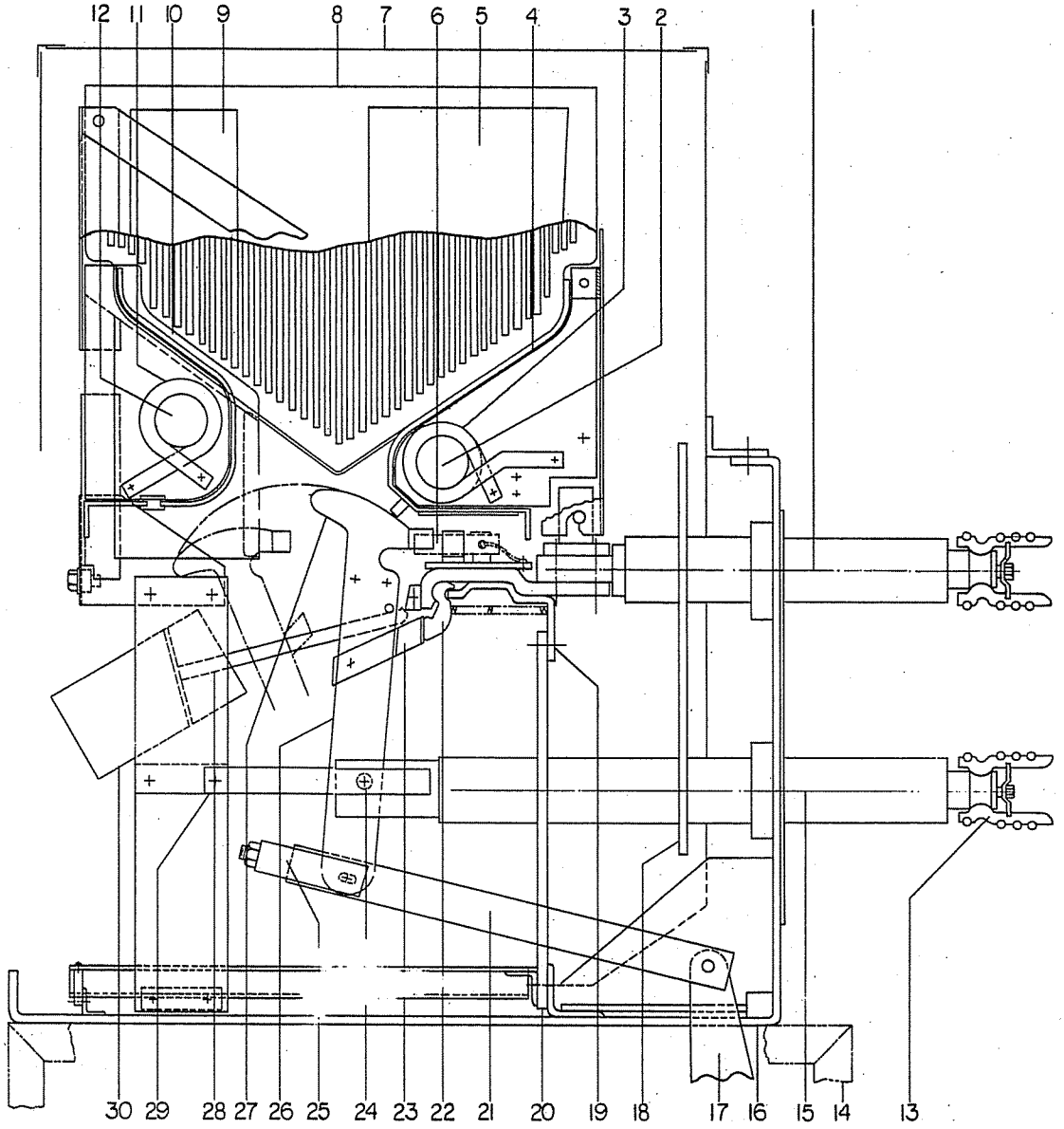

Fig. 10 (0121C8153) Cross Section of Breaker Pole Unit

1. Upper Bushing
2. Blow-out Core
3. Blow-out Coil
4. Arc Runner
5. Pole Piece
6. Stationary Arcing Contact
7. Box Barrier
8. Arc Chute
9. Pole Piece
10. Arc Runner
11. Blow-out Coil
12. Blow-out Core
13. Disconnect Fingers
14. Lower Frame
15. Lower Bushings
16. Frame
17. Operating Crank
18. Rear Vertical Barrier
19. Spring Retainer
20. Lower Vertical Barrier
21. Operating Rod
22. Stationary Primary Contacts
23. Movable Primary Contacts
24. Cup Bearing
25. Yoke
26. Movable Contact Arm Assembly
27. Movable Arcing Contact
28. Booster Tube
29. Connection Bar
30. Booster Cylinder and Piston

ADJUSTMENTS

All adjustments should be checked during periodic inspections and whenever it becomes necessary to repair or replace parts that have become worn or defective while in service. The following adjustments are listed in the order in which they are to be checked after removing the top cover and box barrier from the breaker.

DO NOT WORK ON EITHER THE BREAKER OR MECHANISM UNLESS THE CLOSING SPRINGS ARE BLOCKED AND THE OPENING SPRINGS HAVE BEEN TRIPPED OPEN OR MECHANICALLY BLOCKED. THIS MEASURE IS REQUIRED TO PREVENT ACCIDENTAL CLOSING OR TRIPPING.

Arcing Contact Wipe

Refer to Figure 11. Close the breaker until the arcing contacts just touch. This can be determined with the use of a circuit continuity tester such as a light indicator or bell set. In this position, the gap between the stationary primary contacts (1) and the movable primary contact (2) should be 5/16" or greater. This setting has been

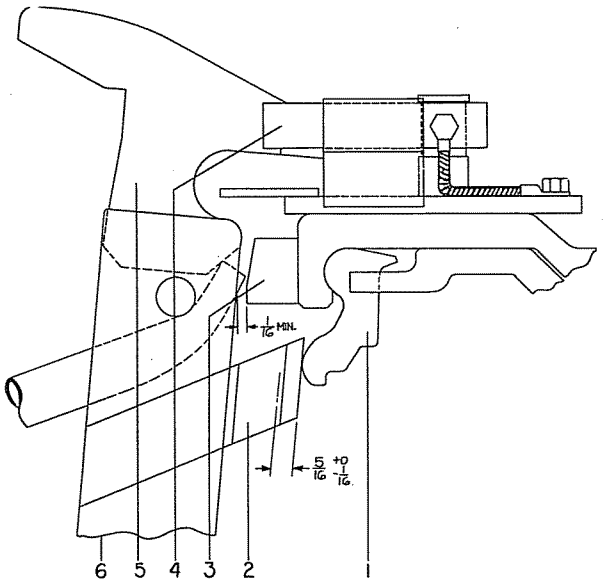

Primary Contact Wipe

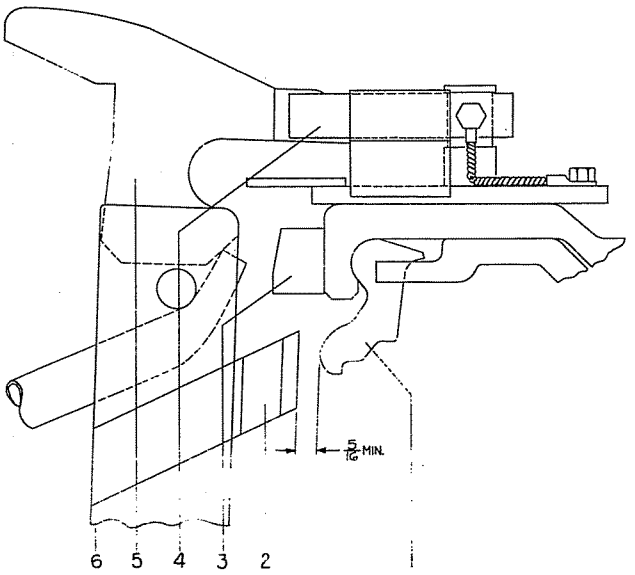

Arcing Contact Wipe

Figure 11A. "-OD" Contact Structure (0121C8152)

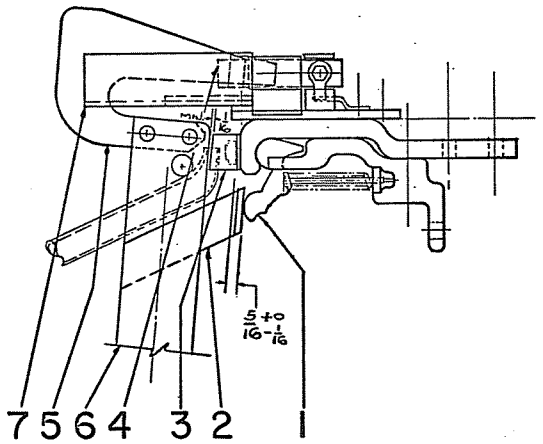

Primary Contact Wipe

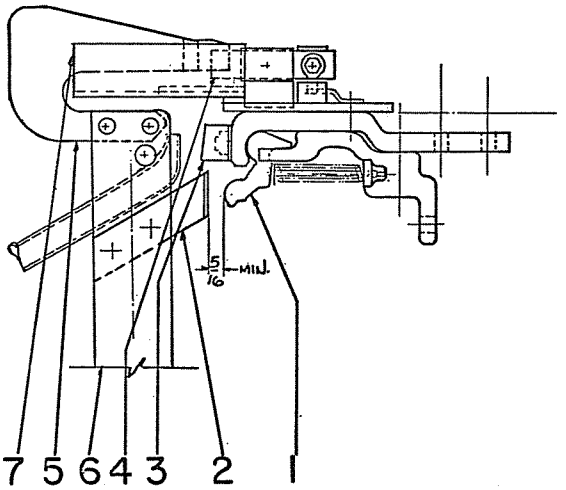

Arcing Contact Wipe

Figure 11B "-1D" Contact Structure (0132C2794)

Figure 11 Contact Adjustments

1. Stationary Primary Contacts
2. Movable Primary Contacts
3. Buffer Block
4. Stationary Arcing Contacts
5. Movable Arcing Contacts
6. Contact Arm
7. Throat Baffle

made in the factory and no adjustment is provided. A wipe of less than 5/16" is an indication that the arcing contacts need to be replaced. When making this check, see that the movable arcing contact (5) passes between the probes on the upper arc runner without touching. On the "-1D" design, also check for clearance between the arcing contact (5) and the slot in the throat baffle (7) during entire stroke of the moving contact assembly.

Primary Contact Wipe

Refer to Figure 11, when the breaker is closed the stationary primary contacts (1) should rise from 1/4" to 5/16". Before checking this dimension be sure the mechanism is re-set so that the prop pin (13) Figure 8 is resting on the prop. To obtain the proper contact adjustment, open the breaker and, referring to Figure 12, loosen the check nut (13) and turn the adjusting nut(12). Screwing the adjusting nut toward the operating rod (11) will decrease the primary contact wipe, toward the end of the stud (14) will increase it. Tighten the check nut, close the breaker and recheck the wipe. With the primary contact wipe correctly adjusted, the clearance between the contact arm (6) Figure 11 and the buffer block (3) should be 1/16" or greater when the breaker is fully closed.

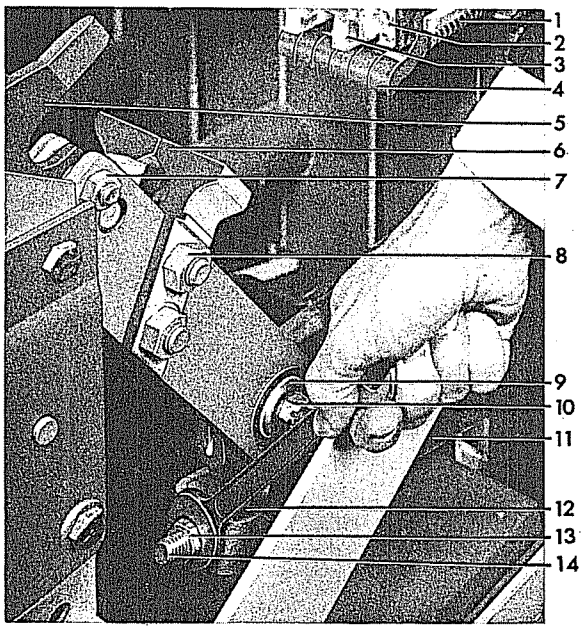

Fig. 12 (8037374) Primary Contact Adjustment

1. Contact Spring
2. Buffer Retainer
3. Buffer Block
4. Stationary Primary Contact
5. Movable Arcing Contact
6. Movable Primary Contact
7. Arcing Contact Bolts
8. Primary Contact Bolts
9. Cupped Hinge Washer
10. Hinge Nut
11. Operating Rod
12. Adjusting Nut
13. Check Nut
14. Operating Rod Stud

Primary Contact Gap

Refer to Figure 12. With the breaker closed, press the manual trip button allowing the breaker to trip open normally. Do not force the contacts open wider by hand. The gap between the stationary primary contacts (4) and the movable primary contact (6) measured between the closest points, should be 3-5/8" to 3-15/16". To change this gap, loosen the check nut (17), Figure 8, and turn the adjusting nut (18) on stud (19). Screwing the adjusting nut down will decrease the primary contact gap. Tighten the check nut and re-measure the contact gap (close and trip the breaker before checking the measurement). Whenever the primary contact gap is changed, the primary contact wipe should be rechecked and, if necessary, readjusted.

WHEN WORKING ON THE MECHANISM IN THE CLOSED POSITION, KEEP FINGERS CLEAR OF THE LINKAGE, AS ACCIDENTAL TRIPPING CAN CAUSE SEVERE INJURY.

Trip Latch Wipe

Refer to Figure 8. The wipe of the trip latch (8) on the trip roller (9) should be from 3/16" to 1/4". This can be measured by putting a film of grease on the latch (8), closing the breaker part way, and tripping. The mechanism has the proper trip latch wipe when the latch rests against the stop pin (23). No adjustment is provided and a visual inspection is usually all that is required. If this setting is not correct, look for insufficient travel of the trip shaft (7).

Trip Armature Travel

Refer to Figure 8. The trip armature (1) should have 7/32" to 9/32" travel before the trip latch (8) starts to move. This can be adjusted by moving the trip coil support (2) and/or by adjusting the trip armature screw (14), Figure 9. A locking screw located behind the trip armature screw must first be loosened. Retighten locking screw after making adjustment.

Release Latch Wipe

Refer to Figure 4. The wipe between the release latch (14) and roller (8) should be 3/16" to 1/4". If re-setting is required, loosen, set, and retighten adjustment nut and screw (5).

Release Latch Monitoring Switch

Refer to Figure 4. The release latch must be fully re-set and the latch monitoring switch (20) operated before the motor will start. When the latch is fully reset the clearance between the switch striker arm and the switch mounting bracket (21) is 1/32" or less, this can be adjusted by bending the striker arm.

Motor and Relay Switches

Refer to Figure 4. With the closing springs blocked rotate the switch cam (9) until the switch striker (10) has traveled the maximum amount (about 180 degrees rotation of cam). At this point the clearance between the striker and the switch support (12) should be 1/32" or less. This can be adjusted by loosening the switch support mounting bolts (15) and rotating the support.

Interlock Switch Wipe

Refer to Figure 13. With the positive interlock in the reset, or normal position the clearance between the interlock switch arm (4) and the switch mounting plate should be 1/32" or less. This can be adjusted by bending the switch arm.

Driving Pawl Adjustment

Refer to Figure 5. The driving pawl must advance the ratchet wheel (7) sufficiently on each stroke to allow the latching pawls (3) to fall into the ratchet teeth. This should be checked with the closing spring load against the driving members. With the mechanism unblocked, hand charge the closing springs with the manual charging wrench until they are slightly more than half charged. Slowly rotate the charging wrench until the driving pawl has traveled through its return stroke and check the maximum clearance between the pawl and the ratchet tooth. Rotate the charging wrench until the driving pawl has advanced the ratchet tooth to its maximum travel. Now check the clearance between the ratchet tooth and the latching pawl. The clearance should be approximately equal for both the driving and latching pawls and not less than .015" in either case.

If adjustment is required for either pawl the springs must first be fully charged and blocked. Loosen seven motor support bolts (2) Figure 7 and move entire motor assembly up if the clearance is under the minimum at the latching pawls, and down if the clearance is under the minimum at the driving pawl. Move the motor assembly approximately twice the dimensional increase required at the pawl. Be certain the motor assembly is moved straight up or down and tighten the one bolt on the left of the mounting frame first to assure proper alignment. After tightening the remaining bolts the springs should be released and the clearance again checked as described above.

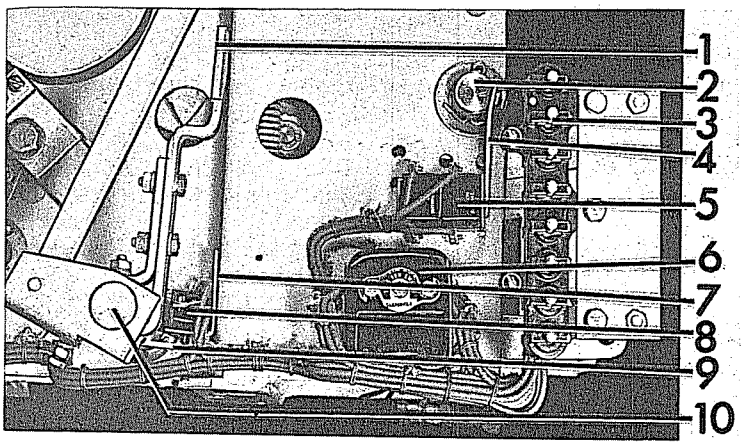

Fig. 13 (8037375) Interlock Switches

1. Manual Trip Lever
2. Interlock Shaft
3. Secondary Coupler
4. Interlock Switch Arm
5. Interlock Switch
6. Auxiliary Switch
7. Switch Support
8. Latch Check Switch
9. Switch Arm
10. Trip Shaft

AUXILIARY DEVICES

Latch Checking Switch

Refer to Figure 14. Charge the closing springs sufficiently to reset the mechanism linkage. Rotate the trip latch (4) by pressing the manual trip lever to open the latch checking switch (2). Allow the trip latch to reset slowly and determine the point at which the contacts are made by using a circuit continuity tester (light indicator, bell set, etc). The contacts of the latch checking switch should just make when the gap between the trip latch (4) and the stop pin (5) located on the latch roller link (7) is 1/16". There should be a minimum of 1/64" between the switch arm (3) and the switch support (1). To obtain adjustment of the latch checking switch, bend the latch checking switch arm (3).

Auxiliary Switch Operator

Refer to Figure 6. With the breaker in the closed position, the vertical distance "A" from the top of the roller on the crank (3) to the floor line should be 14-3/8" to 14-7/16". This adjustment is set and pinned at the factory and no adjustment is provided.

Inspection and Test

1. For ease in reviewing the adjustments, the following are recapitulated:

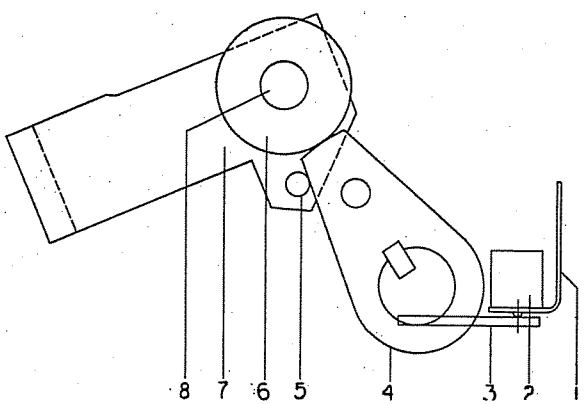

Figure 14 (0121C8152) Latch Checking Switch

1. Switch Support
2. Latch Checking Switch
3. Switch Arm
4. Trip Latch
5. Reset Pin Stop
6. Latch Roller
7. Latch Roller Link
8. Latch Roller Pin

a. Primary contact wipe: 1/4" to 5/16".
b. Arcing contact wipe: 5/16" or greater gap at primary contacts.
c. Primary contact gap: 3-5/8" to 3-15/16".
d. Trip latch wipe: 3/16" to 1/4" with trip latch resting against stop pin.
e. Trip armature travel 7/32" to 9/32".
f. Release latch wipe: 3/16" to 1/4".
g. Release latch monitoring switch: Maximum clearance 1/32".
h. Motor and relay switch: maximum clearance 1/32".
i. Interlock switch: maximum clearance 1/32".
j. Driving and Latching Pawl: minimum clearance to ratchet teeth .015".
k. Latch checking switch contacts make when the gap between the trip latch and the stop pin is 1/16".
l. Auxiliary switch operator - 14-3/8" to 14- 7/16".

2. Check all nuts, washers, bolts, cotter pins, and terminal connection for tightness.

3. Inspect all wiring to make sure that no damage has resulted during installation, and test for possible grounds or short circuits.

4. See that all bearing surfaces of the mechanism have been lubricated. Refer to the section on LUBRICATION. (Page 18 and Figure 16).

5. Operate the breaker slowly with the manual charging wrench and note that there is no excessive binding or friction and that the breaker can be moved to the fully opened and fully closed positions.

6. See that any place where the surface of the paint has been damaged is repainted immediately.

7. Check the trip coil plunger and the release coil plunger to see that they move freely.

Opening and Closing Speeds

The closing speed of the arcing contact of the breaker should be a minimum of 11 feet per second. This represents the average speed of the movable arcing contact from a point 3" before the tip is tangent to the lower surface of the probes on the rear arc runner to the tangent position.

The opening speed of the arcing contact should be a minimum of 12 feet per second. This represents the average speed over 3" from the point when the tip on the movable arcing contact is tangent to the lower surface of the probes on the rear runner. Proper servicing and lubrication of the breaker and its operating mechanism should maintain these speeds and no adjustment is provided.

Control Power Check

After the breaker has been operated several times with the manual charging wrench and the mechanism adjustments are checked as described, the operating voltages should be checked at the release coil, trip coil, and motor terminals. Control Power for electrical operation of the breaker may be from either an alternating or direct current source. The operating ranges for the closing and tripping voltages as given on the breaker nameplate, are as follows:

Nominal Voltage	Closing Range	Tripping Range
24v d-c	-	14 - 30v d-c
48v d-c	34 - 50v d-c	28 - 60v d-c
110v d-c	80 - 115v d-c	60 - 125v d-c
125v d-c	90 - 130v d-c	70 - 140v d-c
220v d-c	160 - 230v d-c	120 - 250v d-c
250v d-c	180 - 260v d-c	140 - 280v d-c
115v a-c	95 - 125v a-c	95 - 125v a-c
230v a-c	190 - 250v a-c	190 - 250v a-c

If the closed circuit voltage at the terminals of the coil or motor does not fall in the specified range, check the voltage at the source of power and line drop between the power source and breaker.

When two or more breakers operating from the same control power source are required to close simultaneously, the closed circuit voltage at the closing coil or motor of each breaker must fall within the specified limits.

Electrical closing or opening is accomplished by energizing the closing or trip coil circuit. Control switches are provided for this purpose on the metal-clad unit. It is also possible to trip or close the breaker manually by pressing the manual trip lever (1) Figure 2 or the manual close button (6).

GENERAL MAINTENANCE

General

Safe and dependable service from electrical apparatus and power systems is contingent upon reliable performance of power circuit breakers. To obtain maximum reliability the breaker should be inspected and maintained on a regular schedule. The breakers are designed in accordance with applicable standards which require that they be capable of performing up to 5000 operations for 1200 ampere breakers and 3000 operations for 2000 ampere breakers switching rated continuous current before any replacement of parts should be necessary. This requirement is based on the breakers being serviced, or maintained, at least every 2000 operations, or once per year, whichever comes first. If the breaker is also required to interrupt fault currents during this period of time additional maintenance and replacement of parts may be necessary.

BEFORE ANY MAINTENANCE WORK IS PERFORMED, MAKE CERTAIN THAT ALL CONTROL CIRCUITS ARE DE-ENERGIZED AND THAT THE BREAKER IS REMOVED FROM THE METAL-CLAD UNIT. DO NOT WORK ON THE BREAKER OR MECHANISM WHILE IN THE CLOSED POSITION UNLESS THE PROP AND TRIP LATCH HAVE BEEN SECURELY WIRED OR BLOCKED TO PREVENT ACCIDENTAL TRIPPING. DO NOT WORK ON THE BREAKER OR MECHANISM WHILE THE SPRINGS ARE CHARGED UNLESS THEY ARE SECURED IN THAT POSITION BY THE MAINTENANCE SPRING BLOCKING DEVICE.

Periodic Inspection

The frequency of the inspection and maintenance operations required should be determined by each operating company and will depend on the application of the breakers and the operating conditions. Factors which should be considered are: Importance of the breakers to overall plant or system operation; number of operations and magnitude of currents switched by breaker; frequency of fault interruptions; and the atmospheric conditions in which the breaker normally operates. Extreme conditions of dust, moisture, corrosive gases etc., can indicate that inspection and maintenance will be required more frequently than every 2000 operations. Very clean dry operating conditions with low current switching duty can justify a longer period of time between inspections. Any time a breaker is known to have interrupted a fault at or near its rating it is recommended that the breaker be inspected and necessary maintenance be performed as soon after the interruption as is practical. The following instructions give the items that should be included in an inspection and general recommendations on the maintenance of breakers.

Interrupters

Since there are no moving parts, the interrupters of a magneblast breaker will normally require little or no inspection unless there is evidence of damage to the arc chutes sides or contamination in the throat area. If either of these conditions are present the interrupters should be removed from the breaker and the following points noted:

1. The throat area of the interrupter should be cleaned with sandpaper (Do Not use emery cloth or other metallic abrasives). All flat areas on either side of the movable arcing contact travel should be sanded. Do not sand or otherwise attempt to clean

the ceramic fins of the arc chute sides. Heavily contaminated parts should be replaced.

2. Cracks which have formed in the fins of the arc chute are to be expected in ceramic materials of this type when subjected to the severe heat of an arc. These cracks do not interfere with the operation of the device in any way and should be disregarded.

3. If the arc chute has suffered any mechanical injury due to dropping or accidental striking, resulting in the actual breaking off of fins, replacement will be necessary. Small broken corners on the exhaust end of the arc chute sides will not interfere with its performance and can be disregarded.

4. The plastisol flexible covering for the pole interrupter support (10) ahould be inspected for breaks in the insulation. If there are holes or breaks in the insulation they should be repaired or the part replaced.

Interrupter Removal And Replacement

To remove an interrupter, open the breaker contacts and remove the top cover and box barrier. Referring to Figure 15, loosen the two rear support bolts (6) and the one front support bolt (3) using a standard 3/4" wrench. Slide the complete interrupter assembly approximately 3/8" toward the rear and remove by lifting straight up.

To reassemble the interrupter to the breaker, lower the interrupter into the front support (2) and over the rear support (7). Slide the interrupter assembly toward the front making certain that the cut-out in the interrupter support engages the bolt (6). On the "-1D" design check to assure that the throat insulation (7), Figure 18 in the interrupter is properly positioned within the throat barrier extending from the stationary contact support (5), Figure 21.

Tighten the supporting bolts (3) and (6), Figure

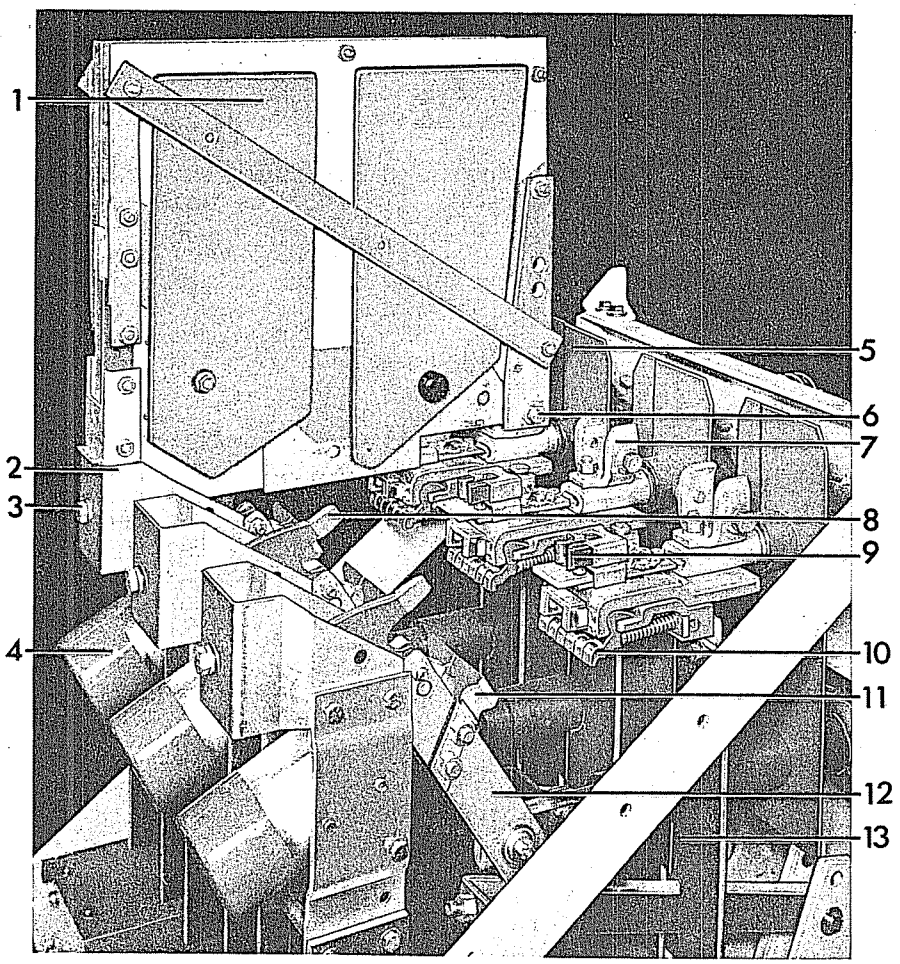

1. Interrupter
2. Front Interrupter Support
3. Front Support Bolts
4. Booster Cylinder
5. Rear Vertical Barriers
6. Rear Support Bolt
7. Rear Interrupter Support
8. Movable Arcing Contact
9. Stationary Arcing Contact
10. Primary Finger
11. Movable Primary Contact
12. Contact Arm
13. Front Vertical Barriers

Fig. 15 (8037385) Interrupters partially removed showing accessibility of Arcing Contacts

15. These bolts serve as both the electrical and mechanical connections between the bushings and the arc runners within the interrupter. Check that the movable arcing contact (8) passes between the probes on the rear arc runner (5) Figure 18 without touching.

Breaker Contacts

By removing the top cover and the box barrier the movable and stationary primary contacts and the movable arcing contacts can be inspected. The stationary arcing contacts can be inspected only after removing the interrupter. If the contacts are burned or pitted, they can be made smooth with a fine file.

After completing inspection of the contacts, check the contact adjustments as specified under ADJUSTMENTS.

Mechanism

A careful inspection should be made to check for loose nuts or bolts and broken retaining rings. All cam, roller, and latch surfaces should be inspected for any evidence of damage or excessive wear. Lubricate the mechanism as outlined below, then, using the manual charging wrench, open and close the breaker several times to make certain that the mechanism operates freely throughout its entire stroke. Check the mechanism adjustments as specified under ADJUSTMENTS. Check the control wiring for tightness of connections and damaged insulation.

Bushings and Insulation

The surface of the bushings should be kept clean and unmarred to prevent moisture absorption. If the insulation surface should become damaged, it should be sanded and cleaned, and should be refinished with either clear varnish or clear resin. Allow to dry smooth and hard.

All other insulation parts on the breaker should be kept clean and dry. Smoke or dust collected between inspection periods should be wiped off, and if dampness is apparent, heaters should be installed in the metal clad switchgear to insure dryness.

Insulation Test

When insulation has been repaired or replaced, or when breaker has been operating in adverse moisture conditions, it is recommended that the insulation be checked before the breaker is placed back in service. A standard 60 hertz high potential test at 14,000 volts RMS for one minute will normally indicate whether the breaker is satisfactory for service. With the breaker contacts in the fully opened position, apply the test potential to each terminal of the breaker individually with all other terminals and the breaker frame grounded. After high potential tests are made on organic insulating materials, these materials should be inspected for visible leakage current paths, and necessary action must be taken to repair or replace insulation that may have been affected by moisture absorption.

If the breaker secondary wiring is to be given a high potential test at 1500 volts, remove both of the motor leads from the terminal board. Failure to disconnect the motor from the circuit may cause damage to the winding insulation.

Lubrication

In order to maintain reliable operation, it is important that all circuit breakers be properly lubricated at all times. Most of the bearings and rolling surfaces utilize a new type of dry lubrication that will require no maintenance and will last the life of the equipment. Only few bearings and surfaces listed in the chart, Figure 16, require lubrication. These have been properly lubricated during assembly at the factory, using the finest grades of lubricants available. However, even the finest oils and greases have a tendency to oxidize with age, as evidence by hardening and darkening in color. Elimination of the hardened lubricant is essential for the proper operation of circuit breakers. Also frequent operation of the breaker causes the lubricant to be forced out from between the bearing surfaces. A simple lubrication will often clear up minor disturbances which might be mistaken for more serious trouble.

A definite lubrication schedule should be set up taking into consideration the frequency of operation of the breaker and local conditions.

It is recommended that lubrication of the breaker and its operating mechanism be a part of the periodic inspection and maintenance program, with not more than a two year period between lubrications. It is also recommended that all circuit breakers be operated at regular intervals, at least once a year, to insure the lubrication is in good condition and the breaker is operable.

The lubrication chart, Figure 16, is divided into two methods of lubrication. The first method outlines the maintenance lubrication which should be performed at the time of periodic maintenance, and requires no disassembly. The second method outlines a lubrication procedure similar to that performed on the breaker at the factory, and should be used when a general overhaul of the breaker is necessary.

General Electric Lubricants D50H15 and D50H47 are available in 1/4 lb. collapsible tubes. It is so packaged to insure cleanliness and to prevent oxidation.

METHOD OF CLEANING BEARINGS

Whenever cleaning of bearings is required, as indicated in the lubrication chart, the following procedures are recommended:

Sleeve Bearings

The sleeve bearings used throughout the linkage

PART	LUBRICATION AT MAINTENANCE PERIOD	ALTERNATE LUBRICATION (REQUIRES DISASSEMBLY)
Sleeve Bearings - links, trip shaft, etc. (Teflon coated bearings)	No lubrication required.	No lubrication required.
Sleeve Bearings - main crank shaft, driving pawl lever. (Bronze or cast iron)	Light application of machine oil SAE 20 or SAE 30.	Remove bearings or links clean per instructions and apply D50H15 lubricant liberally.
Contact Arm Hinge Assembly Cup bearing Loose rings between bushing and contact arm.	No lubrication required.	Wipe clean and apply D50H47.
Roller and Needle Bearings	Light application of machine oil SAE 20 or SAE 30.	Clean per instructions and repack with D50H15 lubricant.
Ground surfaces such as cams, ratchet teeth, etc. (Surfaces coated with M_oS_2)	No lubrication required.	No lubrication required.
Ground surfaces such as latches, rollers, prop, etc.	Wipe clean and apply D50H15 lubricant.	Wipe clean and apply D50H15 lubricant.
Silver plated contacts and primary disconnect studs.	Wipe clean and apply D50H47.	Wipe clean and apply D50H47.
Booster Cylinder	Do not Lubricate.	Do not lubricate.
Arcing Contacts	Do not Lubricate.	Do not lubricate.

Figure 16 Lubrication Chart

utilize Teflon surfaces and do not require lubrication. After a number of operations, the surface will acquire a thin black film. Do not remove this film unless there is evidence of outside contaminates, such as dry or hardened grease. If contaminants are present they should be removed by immersing the link and bearing in clean petroleum solvent, or similar cleaner, and using a stiff brush. Do not remove the bearings from the links. DO NOT USE CARBON TETRACHLORIDE.

The hinge of the primary contact arm (22) Figure 21, should be disassembled, cleaned, and lubricated with G-E D50H47 lubricant at general overhaul periods.

The main shaft bearings (24) Figure 8 and the bearings in driving pawl lever (6) Figure 7, should be removed, cleaned, and lubricated with G-E D50H15 lubricant at general overhaul periods.

Roller and Needle Bearings

Refer to Figure 8. The cam follower bearings (6), latch roller bearing (9), and cam shaft bearings (25) should be removed from the mechanism and the inner race disassembled. They should then be placed in a container of clean petroleum solvent or similar cleaner. DO NOT USE CARBON TETROCHLORIDE. If the grease in the bearings has become badly oxidized, it may be necessary to use alcohol (type used for thinning shellac) to remove it. Ordinarily, by agitating the bearings in the cleaning solution, and using a stiff brush to remove the solid particles, the bearings can be satisfactorily cleaned. Do not handle the bearings with bare hands as deposits from the skin onto the bearings are inductive to corrosion. If the bearings are touched, the contamination can be removed by washing in alcohol. After the bearings have been thoroughly cleaned, spin them in clean new light machine oil until the cleaner or solvent is entirely removed. Allow this oil to drain off and then repack them immediately with G-E lubricant D50H15 being sure all metal parts are greased. The inner races should then be assembled.

NOTE: If it becomes necessary to clean the bearings in alcohol (shellac thinner), be sure the alcohol is perfectly clean, and do not allow the bearings to remain in the alcohol more than a few hours. If it is desirable to leave the bearings in the alcohol for a longer time, an inhibited alcohol such as is used for anti-freeze should be used. Even then the bearings should be removed from the alcohol within twenty-four hours. Precautions against the toxic effects of the alcohol must be exercised by wearing rubber gloves and by using the alcohol in a well ventilated room; excessive exposure to the fumes is sometimes unpleasant to personnel. Washing the bearings in the light oil, draining and repacking with lubricant D50H15 should follow immediately.

Bearings that are pressed into the frame or other members such as the motor support (4) Figure 7, should not be removed. After removing the shaft and inner race the bearing can be cleaned satisfactorily with petroleum solvent or a similar cleaner and a stiff brush. Follow the procedure outlined above using a light machine oil and G-E lubricant D50H15 before reassembling the inner race and shaft.

Rolling Surfaces

A number of rolling and rubbing surfaces in the mechanism have been lubricated with a baked-on dry, molybdenum disulfide coating. This lubrication, which can be recognized by its dark, almost black color (e.g. Face of switch cam (9) Figure 4) requires no maintenance and should last the life of the breaker.

Other rolling or rubbing surfaces that are not lubricated with molybdenum disulfide should have the dried, dirty grease removed and a thin film of fresh lubricant D50H15 applied.

MAINTENANCE

Magne-Blast breakers used for switching arc furnaces or capacitors will require more frequent and more detailed inspection and maintenance because of the repetitive nature of the applications. The following schedule is recommended for such breakers:

A. Every 500 Operations, or Every Six Months-Whichever Comes First:

1. Remove the top cover and box barrier.

2. Wipe all insulating parts clean of smoke deposit and dust with a clean dry cloth, including the bushings, and the inside of the box barrier.

3. All flat parts in the throat area of the interrupters should be thoroughly cleaned by using sandpaper. This cleaning should be performed any time the interrupter is removed. The fins on the arc chute sides should not be cleaned. Whenever the interrupter is removed, loose dust and dirt should be blown out before replacing arc chutes. Throat insulation which is heavily contaminated should be replaced.

B. Every 2000 Operations, or Every Six Months Whichever Comes First:

1. In addition to the servicing done each 500 operations, the following inspection should be made and work done when required.

2. Primary Contacts (19 and 20 Figure 21). Inspect the condition of the stationary contact fingers and movable contact blocks. Badly pitted or burned contacts should be replaced. (Note: Burned primary contacts indicate the probable need for arcing contact replacement.) If the contact surfaces are only rough-

ened or galled, they should be smoothed with crocus cloth or draw filed. After contact dressing the primary contacts should be greased lightly with D50H47.

3. Arcing Contacts (2 and 7 Figure 21). When the arcing contact wipe is less than the minimum specified under ADJUSTMENTS, the contacts should be replaced. The contacts should be inspected for uneven wear and/or damage using a mirror to inspect the stationary contacts. Normally it will not be necessary to remove the interrupters for this 2000 operation servicing unless inadequate wipe or contact condition indicate a need for replacement. If the interrupters are removed, the contact braids, and other parts subject to arcing should be checked for possible cleaning or replacement. Do not grease the arcing contacts under any circumstances.

4. Check the breaker and mechanism adjustments as summarized under INSPECTION AND TEST. The necessary readjusments should be made as described under ADJUSTMENTS.

5. The breaker and operating mechanism should be carefully inspected for loose nuts, bolts, retaining rings, etc., all cam, latch and roller surfaces should be inspected for damage or excessive wear. The buffer blocks and their retainers on the bottom of the stationary contact support should be inspected for possible need of replacement.

6. The contacts of the control relay (12) Figure 3, should be inspected for wear and cleaned if necessary.

7. Lubricate the breaker operating mechanism in accordance with instructions under LUBRICATION, page 18 and the lubrication chart Figure 16.

8. Inspect all wiring for tightness of connections and possible damage of insulation.

9. After the breaker has been serviced, it should be operated manually to be sure there is no binding or friction and that the breaker contacts can move to the fully opened and fully closed positions. Its electrical operation should then be checked using either the test position or the test couplers.

C. After Every 10,000 Operations:

1. In addition to the servicing done each 2000 operations, the interrupters should be removed from the breaker and disassembled to permit a detailed inspection of insulation, blow-out coils, arc runners and assemblies which can become contaminated by arc products.

2. The blow-out coils should be carefully examined and if the insulation has been cracked, shrunk or eroded from arc action and heat so that the turns of the coils are not fully insulated from each other, the coils should be replaced. All connections should be checked for tightness.

3. The arc runners should be inspected and replaced when any part of their area has been reduced to 25% of the original metal thickness as a result of arc erosion.

4. Check the stationary arc contacts to assure that the arcing contacts are in good condition and that their connections are tight.

5. Insulating material that is carbonized and cannot be satisfactorily cleaned should be replaced.

6. Any parts damaged or severely burned and/or eroded from arc action should be replaced.

   NOTE: Fine cracks may develop on the fins of the arc chute sides. This is to be expected with ceramic materials when subjected to the high heat of an arc and may be disregarded unless they are long and present a possibility of fin sections breaking completely off. Small broken corners on the exhaust end of the arc chute will not interfere with its performance and can also be disregarded.

7. The cup bearing (23) Figure 21 and the contact ring at the hinge point of the contact blade should be disassembled, inspected, cleaned, and relubricated with G-E contact lubricant D50H47. The contact ring should be inspected for wear and replaced when reduced in thickness to less than 1/32". When reassembling the cup bearing, be sure the cotter pin is properly assembled in the castle nut on the hinge pin (24). This assures proper contact pressure at the hinge.

D. Every 20,000 Operations or Approximately Every Five Years - Whichever comes first:

1. The breaker should be given a general inspection and overhaul as required. All excessively worn parts in both the mechanism and breaker should be replaced. Such wear will usually be indicated when the breaker cannot be adjusted to indicated tolerances. This

overhaul and inspection is more detailed and will require disassembly of mechanism and breaker operating parts.

2. All roller and needle bearings in the operating mechanism should be disassembled, cleaned, and repacked with G. E. lubricant D50H15 as described under LUBRICATION.

3. The stationary primary contact fingers (19) Figure 21, should be disassembled and the silver-plated pivot area of the contact and contact support cleaned and lubricated with G-E. lubricant D50H47.

4. The breaker and operating mechanism should be serviced as described for every 2,000 operations and properly adjusted before being put back into service.

REPAIR AND REPLACEMENT

This section covers the proper method of removing and replacing those parts of the breaker subject to damage and wear that may require repair or replacement at the installation. IMPORTANT: UPON COMPLETION OF ANY REPAIR WORK. ALL BREAKER AND MECHANISM ADJUSTMENTS MUST BE CHECKED. Refer to the section on INSTALLATION, paying particular attention to ADJUSTMENTS and FINAL INSPECTION.

In general, repair work can be accomplished with the removal of the top cover and box barrier only. However, when it is necessary to remove the side covers and front cover, they should be removed as an integral unit. When re-assembling, the dowel pins will reposition the covers to assure satisfactory alignement within the metal-clad unit.

ARC CHUTE (to inspect or replace blow-out coils and arc runners):

With the breaker open and the closing springs in the blocked position, remove the top cover and the box barrier (7), Figure 10. The interrupter can now be removed as described under REMOVAL AND REPLACEMENT page 17.

To disassemble the interrupter after it has been removed from the breaker, proceed as follows:

NOTE: When disassembling the arc chute and its components some small washers, spacers, etc., will be found that cannot be identified in these instructions. Care should be taken to collect and identify these items so they can be reassembled correctly.

1. Remove the caps and assembly bolts (7, 9, 11, & 13), Figure 17.

2. Remove the side brace (5), and pole pieces (3 & 6).

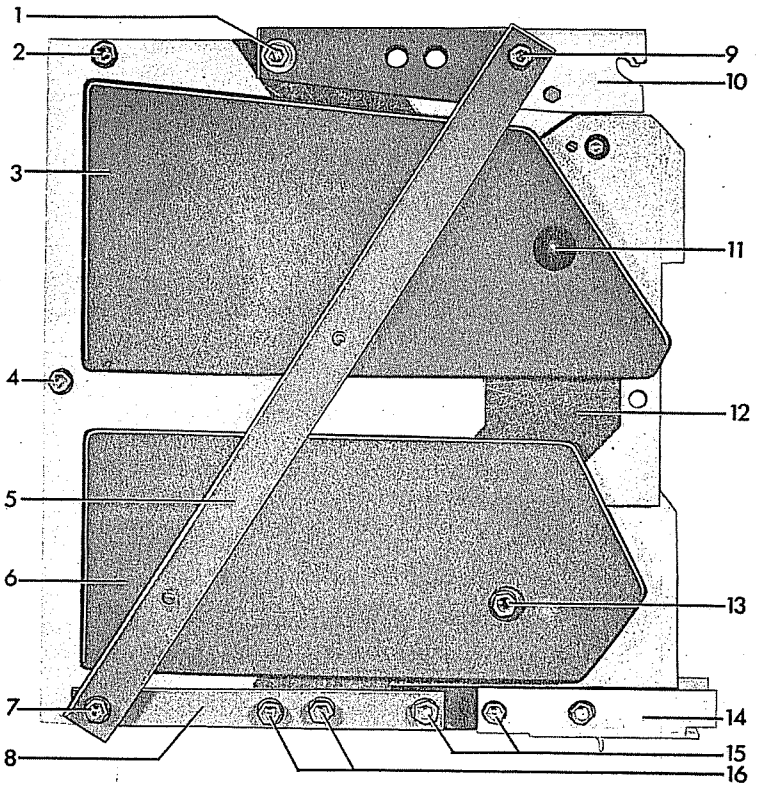

1. Assembly Bolts and Bushing
2. Assembly Bolts
3. Rear Pole Piece
4. Assembly Bolt
5. Side Brace
6. Front Pole Piece
7. Assembly Bolt
8. Front Brace
9. Assembly Bolt
10. Rear Interrupter Support
11. Insulating Cap
12. Side Shield
13. Assembly Bolt
14. Front Interrupter Support
15. Assembly Bolts
16. Assembly Bolts

Fig. 17 (8039601) Interrupter Assembly

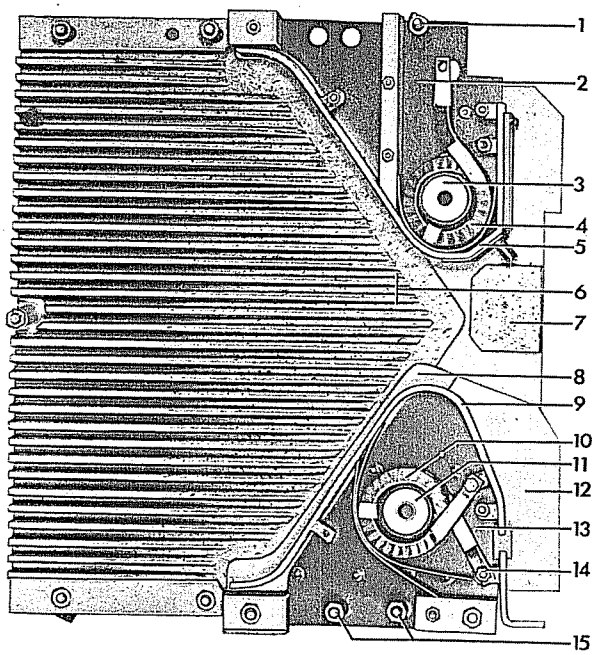

1. Rear Arc Runner Spacer
2. Rear Arc Runner Assembly
3. Blowout Core
4. Blowout Coil
5. Rear Arc Runner
6. Arc Chute Side
7. Throat Insulation
8. Front Runner Shield
9. Front Arc Runner
10. Blowout Coil
11. Blowout Core
12. Front Insulation
13. Front Arc Runner Assembly
14. Front Coil Connection
15. Front Arc Runner Spacers

Fig. 18 (8039603) Interrupter Assembly with Side Removed

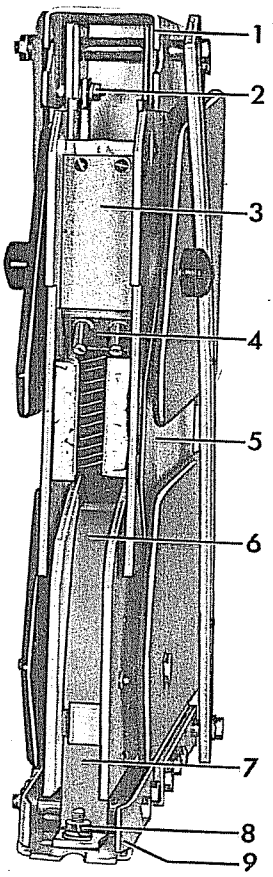

1. Rear Mounting Support
2. Connection Bolt
3. Insulation Plate
4. Rear Arc Runner Assembly
5. Side Shield
6. Front Arc Runner Assembly
7. Front Coil Connection
8. Connection Nut
9. Front Mounting Support

Fig. 19 (8039604) Interrupter Assembly

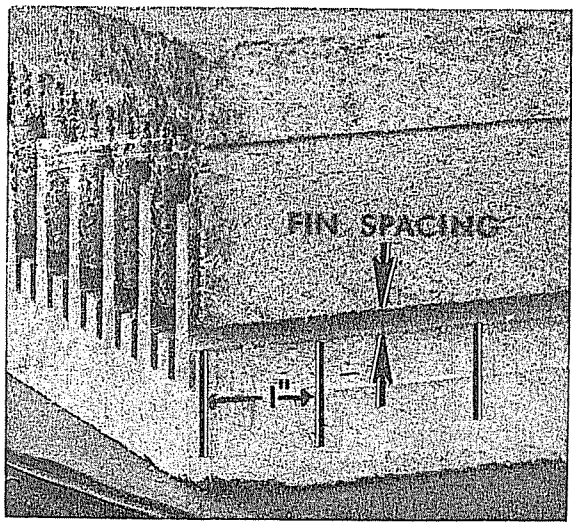

Fig. 20 (8029373) Arc Chute Fin Spacing

3. To remove the rear interrupter support (10) remove the assembly bolt (1), and the bolted connection (2) Figure 19 between the rear interrupter support and the blowout coil.

4. Remove the assembly bolt (16), Figure 17 to remove the front brace (8).

5. Remove the front interrupter support (14) by removing the assembly bolts (15) and the connection nut (8), Figure 19.

6. At this point, the side shields (12), Figure 17, and the arc runner assemblies (4 & 6), Figure 19 can be removed.

7. Further disassembly of both the rear and front arc runner assemblies can be done by removing the various screws and assembly bolts (not illustrated) as shown in Figure 18.

8. The arc chute sides (6) Figure 18, can also be separated for inspection after removing assembly bolts (2 & 4), Figure 17.

Reassemble the interrupter in the reverse order. The following items should be noted during reassembly:

1. The fins of the arc chute sides should be equally spaced and aligned before bolting together. The front edge (along the runner) of the two arc chute sides should be parallel and in line.

2. The gap between the fins at the rear of the arc chute sides measured at least 1" in from the back end of the arc chute (See Figure 20) should be 1/64" to 3/32".

3. Check to insure that electrical connections to the blowout coils are tight.

4. When reassembling the arc runner assemblies, check that the spacers are correctly installed.

5. Before bolting the rear supports in place, make certain that the rear arc runner assembly is tight against the arc chute side so that the gap between the throat insulation (7), Figure 18, and the arc chute sides (6) is a minimum.

6. Make certain that the electrical connections (2 & 8), Figure 19 are tight.

Reassemble the arc chute on the breaker as described under INTERRUPTER REMOVAL AND REPLACEMENT, page 17.

CONTACTS

Open the breaker and remove the top cover, box barrier, and interrupters as previously described. To remove the contacts, proceed as follows:

A. Stationary Arcing Contacts (2), Figure 21.

1. Disconnect the contact braids (4) from the contact fingers by removing two bolts and locking plates (14).

2. Grasp the front end of the contact fingers with pliers and pull contact assembly forward to remove from stud assembly.

3. To disassemble braids from stud plate remove one bolt (13).

4. To disassemble stud plate from contact support, remove two bolts (3).

5. Reassemble in the reverse order, make sure locking plates are properly reassembled with bolts (14).

B. Movable Arcing Contact (7) Figure 21.

1. Remove the assembly bolts (8) making note of quantity and location of shims and spacers used between contacts and contact arms.

2. Reassemble in reverse order, re-using the shims and spacers.

3. Close the breaker slowly to check that the movable arcing contact is approximately centered on the stationary arcing contact and that it does not rub on either side of the throat

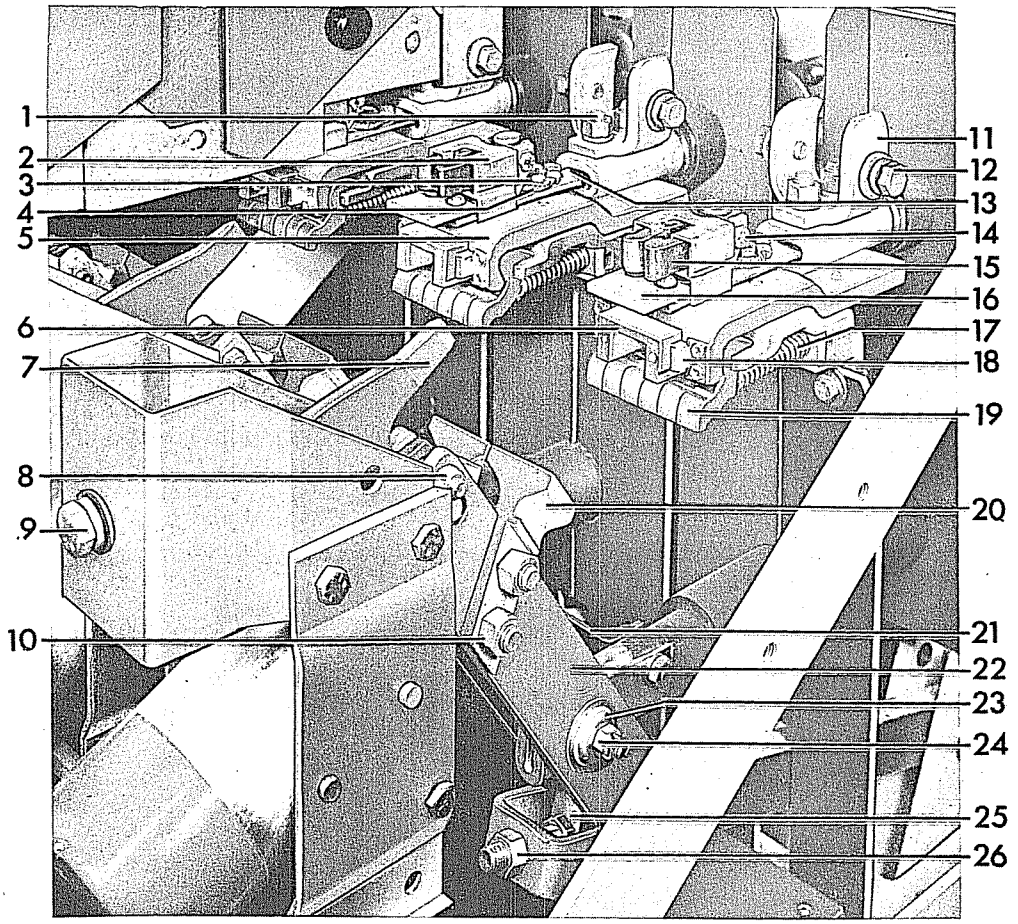

Fig. 21 (8037373) Contact Assembly

1. Bolts for Contact Support
2. Stationary Arcing Contact Asm.
3. Mounting Bolt
4. Flexible Braid
5. Contact Support
6. Buffer
7. Movable Arcing Contact
8. Assembly Bolts
9. Front Support Bolt
10. Assembly Bolts
11. Rear Interrupter Support
12. Rear Support Bolt
13. Bolt for Flexible Braids
14. Connection Bolt
15. Arcing Contact Finger
16. Insulation Plate
17. Contact Spring
18. Buffer Retainer
19. Stationary Primary Contact
20. Movable Primary Contact
21. Connection Bar
22. Contact Arm
23. Cup Bearing
24. Hinge Pin and Nut
25. Operating Rod
26. Adjusting Nut

barrier (7) Figure 11.

NOTE: Whenever it is found necessary to replace arcing contacts on any pole of a breaker it is recommended that both the stationary and movable contacts on that pole be replaced at the same time.

C. Stationary Primary Contacts (9), Figure 22.

1. Compress the contact spring (6) by use of the spring compressor.

2. Remove spring and spring guide (1).

3. Raise the contact finger to clear the primary contact stop plate (8) and lift the finger out of contact support (7). Remove one contact finger at a time.

To replace the Stationary Primary Contacts:

1. Apply a thin coating of D50H47 grease on the hinged edge of the finger (9) then place it on the contact support (7) so that it is retained by stop plate (8).

2. Open spring compressor (3) and assemble spring guide, spring and spring compressor (Figure 22A).

3. Turn nut (2) in clockwise direction to compress contact spring (Figure 22B). Hold spring firmly in yoke on spring compressor to prevent spring from slipping out of the compressor.

4. Place washer (not shown) on guide on top of spring, place top of guide into hole in spring retainer (4) and the round end of spring guide in cutout in primary finger (Figure 22C).

5. Hold spring assembly, firmly in place and remove spring compressor.

D. Movable Primary Contacts (20), Figure 21.

To replace the movable primary contacts on a 1200 ampere breaker proceed as follows:

1. Disassemble nuts from assembly bolts (10) and remove the movable primary contacts (20).

2. Reassemble in reverse order.

To replace the movable primary contacts on a 2000 ampere breaker it is first necessary to disassemble the movable arcing contacts, then proceed as follows:

1. Disassemble operating rod pin, first noting quantity and location of washers in the assembly.

2. Pry contact arms (22) apart enough to disengage pivot pins of piston assembly (28), Figure 10, allowing piston to drop down into its booster cylinder.

3. Rotate the two parts of the contact arm assembly away from each other so accessible and movable primary contacts (20) can be removed.

4. Reassemble in reverse order.

E. Contact Arm Assembly (7, 20, 22, Figure 21).

1. Remove connection bar (21).

2. Disassemble hinge pin (24), cup bearing (23), and operating rod pin noting quantity and location of any washers and spacers used in assemblies.

3. The contact arm assembly including the piston assembly (28), Figure 10 can now be removed.

4. When reassembling, first insert piston tube assembly into the booster cylinder and reassemble the cup bearing, making sure the silvered contact washers between the bushing and contact arms (both sides) are in place.

5. Reassemble operating rod pin and connection bar (21).

F. After disassembly and reassembly of any contacts, check all contact adjustments as described under ADJUSTMENTS.

BUSHINGS

IMPORTANT: DO NOT REMOVE ALL SIX BUSHINGS AT ONCE. The bushings have been carefully aligned with the breaker frame, during assembly at the factory, and it is important that this alignment be maintained to insure interchangeability of the breakers in the metal-clad units. It is, therefore, recommended that the bushings be removed and reassembled one at a time. Also, before removing any one bushing, measure the distance from that particular bushing to adjacent bushings in both directions, so that it may be reinstalled in the same location.

However, it is possible to remove and reassemble three bushings at one time. If this is preferred, alignment of the bushings may be accomplished by placing the breaker in a de-energized spare metal-clad unit before tightening the bushing mounting bolts. This must be done before the interrupters are reinstalled.

To replace the bushing, proceed as follows:

Upper Bushing

1. Open the breaker and remove the top

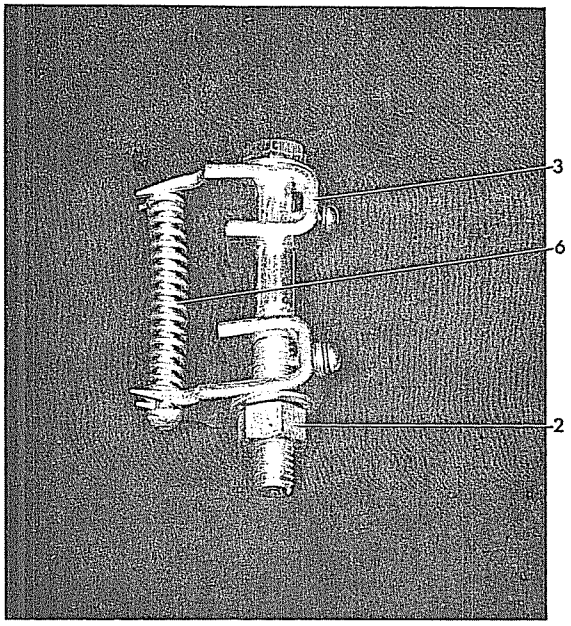

Figure 22A (8034466)

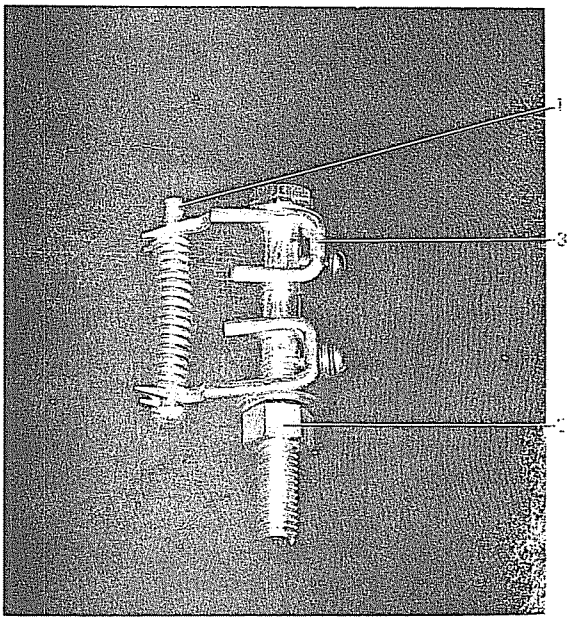

Figure 22B (8034465)

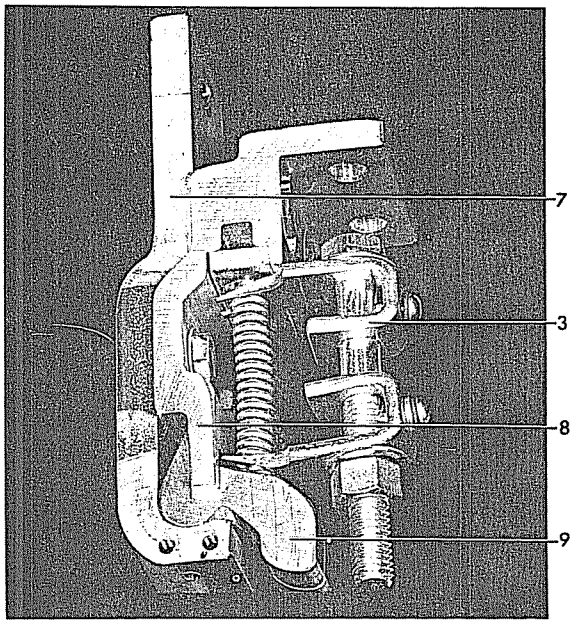

Figure 22C (8034469)

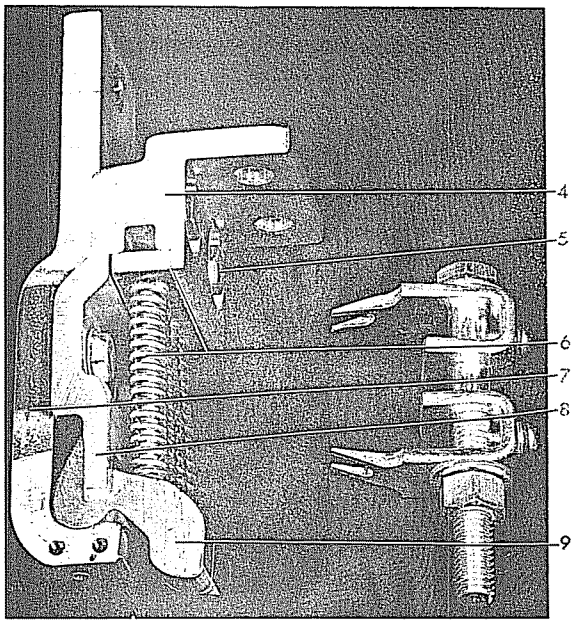

Figure 22D (8034468)

Figure 22. Method of Installing Primary Contact Springs Using a Spring Compressor

1. Spring Guide
2. Compressor Nut
3. Spring Compressor
4. Spring Retainer
5. Assembly Bolts
6. Spring
7. Contact Support
8. Stop Plate
9. Stationary Primary Finger

cover, box barrier, and interrupters as already described.

2. Remove the vertical barriers (5 and 13), Figure 15.

3. Remove the four bolts at the mounting flange of the top bushing being removed and move the bushing assembly toward the front of the breaker.

   NOTE: Shims may be found between the breaker mounting plate and the bushing mounting flange on some, or all bolts. These shims are for squaring up the bushing and may be required when new bushings are assembled.

4. Referring to Figure 22, disassemble the primary contact springs (6) as previously described.

5. Disassemble the spring retainer (4) by removing mounting bolts (5).

6. Referring to Figure 21, disassemble the contact support (5) and interrupter mounting bracket (11) removing two bolts (1).

7. Reassemble in the reverse order. The interrupter mounting bracket (11) is not symmetrical and must be assembled correctly to orient the interrupter properly on the breaker. The longest projection of the bracket should be toward the front end of the bushing.

Lower Bushing

1. Open the breaker and remove the top cover, box barrier, and interrupters as already described.

2. Remove the vertical barriers (5 and 13) Figure 15.

3. Remove the connection bar (21), Figure 21, cup bearing (23), and hinge pin (24).

4. Remove the four bolts at the mounting flange of the lower bushing being removed, and move the bushing assembly toward the front of the breaker. (See note under rear bushings concerning use of shims).

5. When reassembling, first mount the bushing and assemble the cup bearing (23), contact arm (22), and replace pin (24) being sure the silvered contact washers between the bushing and contact arms are in place. The contact surfaces at the hinge point of the contact blade and bushing should have a thin coating of D50H47 grease.

6. Check all contact adjustments as outlined under ADJUSTMENTS.

INTERLOCK SWITCH

To remove the interlock switch (5), Figure 13, remove the two mounting screws and disconnect the lead wires. Reassemble in the reverse order and check the switch adjustments as explained under ADJUSTMENTS.

LATCH CHECKING SWITCH

To remove the latch checking switch (8), Figure 13, (when furnished), remove the two mounting screws and disconnect the lead wires. Reassemble in the reverse order and check the switch adjustments as explained under ADJUSTMENTS.

MOTOR, RELAY AND LIGHT SWITCHES

Two or three switches (13) Figure 4, are mounted in tandem as required by the application.

1. Remove the opening spring per instructions below.

2. Remove (2) mounting bolts (11 & !%) from switch bracket (12).

3. Remove the (2) mounting screws of the lower switch.

4. Remove the (2) mounting screws of the center switch.

5. Remove the (2) mounting screws of the upper switch.

6. Disconnect the lead wires of switch to be replaced.

7. Reassemble in the reverse order and check switch adjustment as explained under ADJUSTMENTS.

TRIP SHAFT AND LATCH (See Figure 9)

1. Remove manual trip lever (3) and if furnished, the latch checking switch operating arm (6) from the trip shaft.

2. Disengage trip latch spring (9).

3. Remove three (3) cotter pins from trip shaft.

4. Remove trip arm screw (14) and trip latch set screw (10).

5. Place a block between the trip latch (11) and the right side of the mechanism frame. Drive the trip shaft to the right until the latch is free of the key, then remove the key.

6. Check for and remove any burrs raised around the keyway on the shaft to avoid damaging the trip shaft bearings.

7. Shaft, latch, etc., may now be removed by driving it to the right through the notch

in the angle of the lower frame. Note quantity and location of washers used as spacers in the assembly.

8. Reassemble parts in reverse order. Be sure trip latch is aligned in center of trip latch roller and that the latch spring is properly installed. Check latch adjustment as described under ADJUSTMENTS.

TRIP LATCH ROLLER BEARING

1. Remove (2) cotter pins at ends of trip latch roller shaft (8) Figure 14.

2. Partially remove shaft out right side of frame until latch roller (6) is free.

3. Reassemble in reverse order with proper spacing of washers. Be sure latch roller rotates freely.

CLOSING LATCH

1. Remove cotter pins at both ends of closing latch shaft (17) Figure 4.

2. Remove spring and paddle (18).

3. Remove set screws from latch (14).

4. Move shaft (17) to right (away from frame) by tapping lightly on the inside end of shaft. Rotate shaft and continue tapping until shaft is free. Shaft will push outside needle bearing from housing.

5. Reassemble in reverse order putting bearing into frame last. Use a small piece of tubing or pipe when inserting bearing to assure proper alignment.

6. Check closing latch adjustments as described under ADJUSTMENTS.

MOTOR

1. To remove motor (11) Figure 3, first remove the cotter pin from the rear end of the treadle link (6), Figure 6. Rotate link up to clear motor.

2. Remove motor leads from the terminal board.

3. Remove four mounting bolts from motor (not shown).

4. Reassemble the motor in the reverse order and re-align it properly as described under DRIVING PAWL ADJUSTMENTS.

CAM

1. Remove 2 set screws from ratchet wheel (7) Figure 5 and remove wheel from main shaft (6).

2. Remove 2 set screws from switch cam (9) Figure 4 and remove cam from the main shaft.

3. Remove prop reset spring (7) Figure 9.

4. Remove 2 set screws from cam (16), Figure 8, and move cam to the right on the shaft as far as it will go. Slide the shaft to the left until key is fully exposed. Remove key and check shaft for burrs.

5. Remove shaft out left side of frame.

6. Reassemble in reverse order using the correct number of washers and spacers to properly locate the parts.

7. Rotate the mechanism through a closing operation using the manual charging wrench. Check the location of the cam follower (6), Figure 8, on the cam (16). If necessary, move the cam to correct the alignment. Complete the closing operation and check the location of the prop pin (13) on the prop (14). It should be approximately centered.

TRIP COIL

To replace the potential trip coil (13), Figure 9, proceed as follows:

1. With the breaker in the open position, remove the two mounting bolts (16).

2. Remove trip coil support (12) and spacers.

3. Cut wires at the butt connectors and remove coil.

4. When replacing the coil be sure to assemble the correct fiber spacers at the ends before bolting support (12).

5. Adjust coil location to allow approximately 1/4" of armature travel before latch starts to move.

6. Butt connect wires and check operation of solenoid electrically and mechanically.

SPRING RELEASE COIL

To remove the spring release coil (22) Figure 4, proceed as follows:

1. Block the closing springs as described in INSTALLATION.

2. Remove the right hand closing spring as described in CLOSING SPRINGS below.

3. Remove two mounting bolts, coil support (23), and spacers.

4. Cut wires at the butt connectors and remove coil.

5. Replace the coil and the correct number of fiber spacers before bolting support.

6. Butt connect wires and check that the armature is not binding. Check coil for electrical operation.

CLOSING SPRINGS

The closing springs (10) Figure 3, can be removed as follows:

1. Charge the springs with the manual charging wrench and apply the special short blocking pins (13) supplied in the tool kit. Insert pin so that it is centered in the spring support.

2. Discharge springs by pushing manual close button (6) Figure 2.

3. Rotate cam shaft (6) Figure 5, by using the manual charging wrench until the gap between the spring (11) and the bearing block (8) is a maximum (approximately 3").

4. Remove cotter pin and washer from spring guide pin and remove closing spring (11) and upper spring guide (8) as a unit.

5. Either discharge the opening springs by pushing the manual trip lever or block the opening springs with a suitable blocking device.

OPENING SPRINGS

To remove the opening springs (5) Figure 5, proceed as follows:

1. Charge and block the closing springs as described under INSTALLATION.

2. Push manual trip lever (1) Figure 2, to be sure the opening springs are fully discharged.

3. Remove rear pin (2) Figure 5, and front pin (9).

4. After reassembling springs check the open gap at the primary contacts as described under PRIMARY CONTACT GAP.

RENEWAL PARTS

It is recommended that sufficient renewal parts be carried in stock to enable the prompt replacement of any worn, broken, or damaged parts. A stock of such parts minimize service interruptions caused by breakdowns, and saves time and expense. When continuous operation is a primary consideration, more renewal parts should be carried, the amount depending upon the severity of the service and the time required to secure replacements.

Renewal parts which are furnished may not be identical to the original parts since improvements are made from time to time. The parts which are furnished, however, will be interchangeable.

NOTE: The listed terms "Right" and "Left" apply when facing the front or panel end of the breaker.

ORDERING INSTRUCTIONS

1. Always specify the complete nameplate data of both the breaker and the mechanism.

2. Specify the quantity, catalog number (if listed), reference number (if listed), and description of each part ordered, and this bulletin number.

3. Standard hardware, such as screws, bolts, nuts, washers, etc., are not listed and should purchased locally.

4. For prices, refer to the nearest office of the General Electric Company.

PARTS RECOMMENDED FOR NORMAL MAINTENANCE

In the following tabulations are listed those parts of the breaker and operating mechanism which are usually recommended for stock for normal maintenance. Other parts can be obtained by contacting the nearest office of the General Electric Company.

RECOMMENDED RENEWAL PARTS FOR

TYPE ML-13A STORED ENERGY MECHANISM

USED FOR AMH-4.76-250-0D & 1D, 1200 & 2000 AMPERE

Fig. No.	Ref. No.	No. Req'd.	Description	Catalog No.
3	11	1	Spring Charging Motor - **	
			48 V-DC	0105C9393P001
			110 & 125 V-DC & 115 V-AC, 60 Hz	0105C9393P002
			220 & 250 V-DC & 230 V-AC, 60 Hz	0105C9393P003
3	12	1	Relay - **, #	
			48 V-DC	0137A7575P004
			110 & 125 V-DC	0137A7575P001
			220 & 250 V-DC	0108B1978G001
			115 V-AC, 60 Hz	0137A7575P005
			230 V-AC, 60 Hz	0137A7575P002
9	13	1	Potential Trip Coil - **	
			110 & 125 V-DC	006174582G001
			220 V-DC	006174582G015
			250 V-DC	006174582G002
			115 V-AC, 60 Hz	006174582G013
			230 V-AC, 60 Hz	00 6174582G032
			24 V-DC	006275070G001
			48 V-DC	006174582G034
4	22	1	Spring Release Coil - **	
			110 & 125 V-DC	006174582G001
			220 V-DC	006174582G015
			250 V-DC	006174582G002
			115 V-AC, 60 Hz	006174582G010
			230 V-AC, 60 Hz	006174582G014
			48 V-DC	006174582G034
4	13	5	Switch, Normally Open	0456A0866P005
4	13	1	Switch, Normally Closed	0456A0866P006
9	4	1	Auxiliary Switch	△
4	18	1	Closing Latch Spring	0161A4231P001
9	7	1	Prop Spring	0137A9252P001
*		1	Driving Pawl Spring	0161A4241P001
5	3	2	Latching Pawl Spring	0161A5909P001

* Not Illustrated
** Refer to breaker nameplate or summary for proper voltage rating.
\# Quantity Two (2) relays required on special control circuits. Check breaker and connection diagram.
△ Refer to breaker auxiliary switch for proper model
Type SBM - 0137A9192G003
Type SB-12 - 0137A9192G011

* Indicates Revision

RECOMMENDED RENEWAL PARTS FOR MAGNEBLAST BREAKERS

TYPE AMH-4.76-250-0D & -1D, 1200 & 2000 AMPERES

Fig. No.	Ref. No.	Ampere Rating	Catalog No. For Type AMH-4.76-250 -0D	-1D	No. Req"d.	Description
10	13	1200	0195A4091G001	0195A4091G001	6	Primary Disconnect Fingers
10	13	2000	0195A4091G002	0195A4091G002	6	Primary Disconnect Fingers
10	21	ALL	0137B7902G001	0137B7902G001	3	Operating Rod Assembly
10	28	1200	0213X0343G043	0213X0343G090	3	Tube & Piston Assembly
10	28	2000	0213X0343G044	0213X0343G091	3	Tube & Piston Assembly
21	2	ALL	0236C0790G009	0236C0790G009	3	Arcing Contact Assembly
21	4	ALL	0236C0791G001	0236C0791G001	3	Flexible Connector (Left)
21	4	ALL	0236C0791G004	0236C0791G004	3	Flexible Connector (Right)
21	7	ALL	0802B0742G001	0227A5306G004	3	Movable Arcing Contact
21	16	ALL	0414A0116P004	-	3	Insulating Plate
21	17	ALL	0121A5964P001	0121A5964P001	18	Primary Contact Finger Spring
21	19	ALL	0114C5382P002	0114C5382P002	18	Primary Contact Finger
21	20	ALL	0114C5382P004	0114C5382P004	6	Movable Primary Contact
17	11	ALL	000421711P001	000421711P001	6	Insulating Cap
17	11	ALL	000407193P001	000407193P001	6	Threaded Washer (For Insul. Cap)
18	7	ALL	0108B1965G001	0195A7377G001	3	Throat Insulation (Left)
18	7	ALL	0108B1965G002	0195A7377G002	3	Throat Insulation (Right)
18	8	ALL	0161A5906P001	0161A5906P001	6	Front Runner Shield
18	12	ALL	0114C5381P001	0114C5381P010	6	Front Insulation
19	3	ALL	0114C5381P004	0414A0116P002	3	Insulating Plate
*		ALL	0836C0197P014	0836C0197P014	6	Rear Runner Insulation
11	7	ALL		0195A7388G002	3	Throat Barrier Assembly

* Not Illustrated

NOTES

NOTES

GENERAL ELECTRIC COMPANY
SWITCHGEAR BUSINESS DEPARTMENT
PHILADELPHIA, PA 19142

GENERAL ELECTRIC

3-80 5-70

PRINTED IN U.S.A.