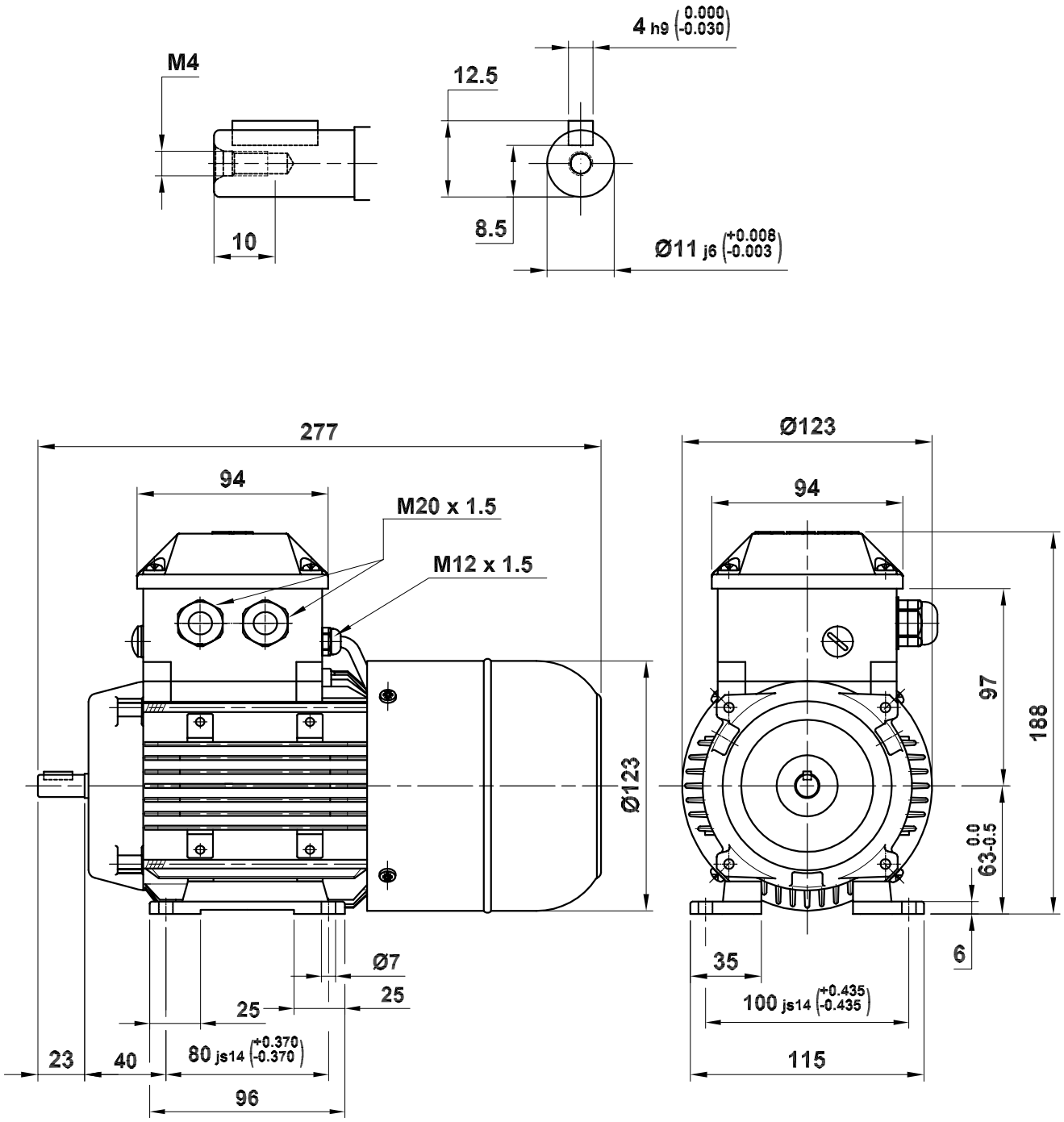

M3VRF/S 63 MA/MB

Motor Dimension Print	Motor Type : M3VRF/S 63 MA/MB	Document Nº : A1.4362

Description : Brake motor foot mounted IM1001

Unit : División Motores, Spain	Issued by : IKM/ J.Muñoz	Replaces :
Date : 2004-09-22	Approved by : IKM/ G.Blanes	Replaced by :

ABB Automation Products, S.A.

Customer Reference :

ABB