POWER CONVERTERS AND CONTROLLERS

ABB Power controllers

DCT880 Thyristor power controller - Manual

DCT880 Manuals

General	Publication number	EN	DE	IT	ES	FR	PL	ZH	RU	JP
DCT880 sales toolbox	-	EN								
DCT880 Quick guide	3ADW000435	EN								
DCT880 Manual set	-	EN								
DCT880 Units										
DCT880 Flyer	3ADW000429	EN	DE	IT	ES	FR		ZH	RU	
DCT880 thyristor power controller for industrial heating applications	9AKK108468A7325	EN								
DCT880 Manual	3ADW000431	EN	DE			FR		ZH	RU	
DCT880 Service Manual	3ADW000449	EN								
DCT880 Power Optimizer Control Manual	3ADW000441	EN								
DCT880 Multitap Control Manual	3ADW000440	EN								
ACS-AP-x assistant control panels user's manual	3AUA0000085685	EN								
Door mounting kits										
DPMP-01 mounting platform for ACS-AP control panel	3AUA0000100140	EN								
DPMP-02 mounting platform for ACS-AP control panel	3AUA0000136205	EN								
Serial communication										
FCAN-01 CANopen adapter module	3AFE68615500	EN	DE							
FDNA-01 DeviceNet™ adapter module	3AFE68573360	EN								
FECA-01 EtherCAT adapter module	3AUA0000068940	EN	DE		ES					
FENA-11/-21 Ethernet adapter module	3AUA0000093568	EN						ZH		
FEPL-02 Ethernet POWERLINK adapter module	3AUA0000123527	EN	DE							
FPBA-01 PROFIBUS DP adapter module	3AFE68573271	EN	DE				PL	ZH		
FSCA-01 RS-485 adapter module	3AUA0000109533	EN						ZH		
FDCO-01/02 DDCS communication modules	3AUA0000114058	EN								
FPNO-21 PROFINET fieldbus adapter module	3AXD50000158614	EN								
Tool and maintenance manuals and guides										
Drive Composer PC tool	3AUA0000094606	EN								
Drive application programming (IEC61131-3) manual	3AUA0000127808	EN								
Adaptive programming, Application guide	3AXD50000028574	EN								
NETA-21 remote monitoring tool	3AUA0000096939	EN								
NETA-21 remote monitoring tool guide	3AUA0000096881	EN								
DDCS branching unit NDBU-95 user's manual	3BFE64285513	EN								
Extension modules										
FIO-11 Analog extension module	3AFE68784930	EN	DE	IT						
FIO-01 Digital extension module	3AFE68784921	EN	DE	IT						
FAIO-01 Analog extension module	3AUA0000124968	EN	DE							
FDIO-01 Digital extension module	3AUA0000124966	EN								
FEA-03 F series extension adapter	3AUA0000115811	EN								
Ethernet tool network for ACS880 drives appl. guide	3AUA0000125635	EN								

Table of contents

DCT880 Manuals 2

Table of contents **3**

Safety instruction **8**

What this chapter contains 8
To which products this chapter applies 8
Usage of warnings and notes 8
Installation and maintenance work 8
Grounding 9
Printed circuit boards 9
Mechanical installation 9
Operation 10

Disclaimers **11**

Generic disclaimers 11
Cybersecurity disclaimer 11
User lock 11

Documentation **12**

DCT880 Information 12
Terms and abbreviations 12

Before use **15**

Acceptance inspection 15
Unpacking the unit 15
Delivery check 15
Type code 16
Precautions for using thyristor power controllers 17
Checking the insulation of the assembly 17
Supply voltage 17
Connecting the power cables 17
Environmental conditions 18
Mean Time Between Failure (MTBF) 18
Mean Time to Repair (MTR) 18
Regulatory compliance 19
Ratings 20
Voltage ratings 20
400 V/525 V units, current ratings, power ratings and power losses 20
690 V units, current ratings, power ratings and power losses 21
800 V units, current ratings, power ratings and power losses 21
990 V units, current ratings, power ratings and power losses 21
Current ratings and type code 22

Installation and wiring **23**

Installation 23
Before installation 23
Cabinet installation 23
Mounting a T5 unit inside a cabinet 24
Mounting a T6 unit inside a cabinet 25
Mounting the T8 power unit inside a cabinet 25
Dimensions and weights 26
Fan terminals and cooling air duct sizes 35
Wiring 38

Connection and wiring example for thyristor power controllers T1 … T5: 38
Removal and attachment of the front cover 49
Cabling 50
Power terminals 52
Terminal covers for units size T1 ... T4 55
Cooling fans 56
Control board SDCS-CON-H01 (T1 ... T8) 59
Location of the control circuit board SDCS-CON-H01 59
Watchdog function 59
Recommended wire size - Tightening torques 59
Intermediate cover 60
Control circuit terminal layout 61
XAI: Reference voltages and analog inputs 62
XAO: Analog outputs 62
XD2D: Device-to-device link 62
RO1, RO2, RO3: Relay outputs 63
XD24: Digital interlock 63
XDIO: Digital inputs/outputs 64
XDI: Digital inputs 64
XENC: 3-wire PT100 temperature measurement 64
XTAC: Analog tachometer 65
XSMC: Mains contactor 65
XSTO: Safe torque off 65
X205 Memory unit connection 65
Replacing the memory unit 66
Additional terminals 66
Ground isolation diagram 67
Jumpers and switches 68
Switch on/off delays (reaction times) 69
DCSLink board SDCS-DSL-H12 (T8) 70
Power interface board SDCS-PIN-H11 (T1 ... T5 and T6 special design) 71
Recommended wire size - Tightening torques 71
Power interface circuit terminal location 71
Fuses F100 … F102: 71
Functions 72
Power interface circuit terminal layout 72
XAUX: Auxiliary voltage input (X99 for T1 ... T5 and T6 special design) 72
XN1: Mains voltage neutral (X54) 73
External measurement of output voltage and output current (CTs) 73
XEXVM: External voltage measurement (X60) 73
XEXCT: External current measurement (X65) 73
Jumpers, external current measurement 74
Power supply board SDCS-POW-H01 (T6 standard and T8) 75
Technical data 75
Measuring board SDCS-PIN-H51 (T6 standard and T8) 76
Settings of the SDCS-PIN-H51 for units size T6 standard and T8 76
Layout of the SDCS-PIN-H51 77
Measurement of the mains voltage, output voltage and output current (CTs) 78
Mains voltage measurement via SDCS-PIN-H51 with location code -A42 78
Output voltage measurement via SDCS-PIN-H51 with location code -A43 78
Current measurement (X65) via SDCS-PIN-H51 with location code -A43 78
External output voltage measurement via SDCS-PIN-H51 with location code -A43 79
External current measurement (X65) via SDCS-PIN-H51 with location code -A43 79
Firing pulse transformer board SDCS-PIN-H41 (T6 standard and T8) 80
Location of the SDCS-PIN-H41 80

Layout of the SDCS-PIN-H41 ... 80
Optical power link board SDCS-OPL-H01 (T8) ... 81
Following connectors are available ... 81
XSMC: Mains contactor ... 81
Location of the SDCS-OPL-H01 ... 82
Layout of the SDCS-OPL-H01 ... 82
Connecting control unit and power unit (T8) ... 83
Interface board SDCS-CMI-H02, current measurement ... 84
SDCS-CMI-H02 via XEXCT (X65) on the SDCS-PIN-H11 ... 84
SDCS-CMI-H02 via X65 on the SDCS-PIN-H51 with location code -A43 ... 85
Circuit diagrams (T1 ... T5) ... 86
Circuit diagram T6 special design ... 88
Units size DCT880-W03-1300/1750-04/05/07XS/XT ... 88
Circuit diagram T6 standard ... 91
Units size DCT880-W03-1300/1750-04/05X0 ... 91
Units size DCT880-W03-1300/1750-07/08X0 ... 94
Circuit diagram T8 ... 97
Unite size DCT880-W03-2100-04/05 … DCT880-W03-4200-04/05 ... 97
Units size DCT880-W03-2100-07/08/10 … DCT880-W03-3900-07/08 ... 99
Circuit diagram T8 with fuse monitoring (+G420) ... 101
Circuit diagram T8 with galvanic isolation (+S189) ... 102
Hardware and firmware settings ... 102
3-phase transformer (T90) ... 104
Circuit diagram T8 with multitap voltage measurement (+S189) ... 105
Circuit diagram T8 with external output voltage measurement(+S191) ... 106
Location of F-type adapters and interfaces ... 107
Fieldbus adapters ... 107
I/O extension modules ... 107
Accessories ... 108
Control panel (T1 ... T8) ... 108
Daisy chain DPI-H01 kit (T1 ... T8) ... 108
Semiconductor fuses (F1) ... 111
Synchronization fuse (F3) ... 116
Fuse (F9) for connection to terminal UN1 (T1 … T5) ... 116
Auxiliary transformer (T2) for the +24 V_{DC} power supply and fans ... 117

Using the control panel **118**

Start-up procedure **119**

Overview diagram ... 119
Step 1: Checks prior to power up ... 120
Step 2: Power ON and check ... 120
Step 3: Set basic parameters and control modes ... 121
Step 4/5: Basic settings for 3-phase mains and direct coupled loads ... 122
Step 6: Common controlled loads, leg 2 and leg 3 follow leg 1 ... 122
Step 4/5: Basic settings for 3-phase mains and direct connected loads ... 125
Step 7: Individual controlled loads, leg 1, leg 2 and leg 3 are independent ... 125
Step 8/9: Basic settings for single-phase mains and direct connected loads ... 127
Step 10: Individual controlled loads, leg 1, leg 2 and leg 3 are independent ... 127
Step 4/11: Basic settings for 3-phase mains and loads connected via transformer ... 129
Step 12: Common controlled loads, leg 2 and leg 3 follow leg 1 via transformer ... 129
Step 4/11: Basic settings for 3-phase mains and loads connected via transformer ... 132
Step 13: Individual controlled loads, leg 1, leg 2 and leg 3 are independent via transformer ... 132
Step 8/14: Basic settings for single-phase mains and loads connected via transformer ... 135
Step 15: Individual controlled loads, leg 1, leg 2 and leg 3 are independent via transformer ... 135
Step 16: Setting up the command chain ... 139

Step 17: Setting up the reference chain 139
Step 18: Run the operation check 143

Communication **144**

What this chapter contains 144
Commissioning and maintenance tools 144
Connect a DCT880 and a PC running Drive Composer 144
DDCS controller interface 145
General 145
Topology 145
Communication 145

Parameters **146**

What this chapter contains 146
Terms and abbreviations 146
Summary of parameter groups 146
Parameter listing 147
1 Actual Values 147
3 Input references 156
4 Warnings and faults 157
5 Diagnostics 159
6 Control and status words 159
7 System info 176
10 Standard DI, RO 181
11 Standard DIO, FI, FO 188
12 Standard AI 193
13 Standard AO 198
14 I/O extension module 1 202
15 I/O extension module 2 221
16 I/O extension module 3 222
19 Start/Stop Mode 222
21 General References 230
22 Leg 1 Reference Chain 234
23 Leg 1 Control Detailed 239
24 Leg 2 Reference Chain 247
25 Leg 2 Control Detailed 247
26 Leg 3 Reference Chain 247
27 Leg 3 Control Detailed 247
28 Unit Faults 247
29 Multitap 254
30 Leg 1 Limits 254
31 Leg 2 Limits 256
32 Leg 3 Limits 256
33 Generic timer & counter 257
35 Temperature Measurement 257
36 Leg 1 Load monitoring 260
37 Leg 2 Load monitoring 267
38 Leg 3 Load monitoring 267
41 Process PID set 1 267
42 Process PID set 2 279
43 Process PID set 3 280
47 Data storage 280
49 Panel port communication 282
50 Fieldbus adapter (FBA) 284
51 FBA A settings 289

52 FBA A data in....291
53 FBA A data out....291
54 FBA B settings....291
55 FBA B data in....291
56 FBA B data out....291
58 Embedded fieldbus....292
60 DDCS communication....298
61 D2D and DDCS transmit data....303
62 D2D and DDCS receive data....306
95 HW configuration....311
96 System....316
99 Basic Settings....324

Fault tracing **348**

Safety....348
Protective functions....348
Before proceeding with troubleshooting....349
Messages....349
Display of status messages, fault, and warning signals....349
Status messages....349
Numerical list of warning and fault codes....350
Overview....350
Warnings and AUX codes....351
General warnings....351
User warnings....357
Leg 1 warnings....358
Problem:....358
Leg 2 warnings....364
Leg 3 warnings....365
Global warnings....365
User events....366
Faults and AUX codes....367
Leg 1 faults....367
Leg 2 faults....367
Leg 3 faults....368
General faults....368
User faults....378
Bootloader faults....379

Firmware structure diagrams **380**

Revision **400**

Safety instruction

What this chapter contains

This chapter contains the safety instructions you must follow when installing, operating, and servicing the thyristor power controller. If ignored, physical injury or death may follow, or damage may occur to the thyristor power controller or the connected equipment. Read the safety instructions before you work on the unit.

To which products this chapter applies

The information is valid for the entire range of the product DCT880.

Usage of warnings and notes

There are two types of safety instructions throughout this manual: warnings and notes. Warnings caution you about conditions which can result in severe injury or death and/or damage to the equipment, and advice on how to avoid the danger. Notes draw attention to a particular condition or fact or give information on a subject.
The warning symbols are used as follows:

Dangerous voltage warning warns of high voltage which can cause physical injury or death and/or damage to the equipment.

General danger warning warns about conditions, other than those caused by electricity, which can result in physical injury or death and/or damage to the equipment.

Electrostatic sensitive devices warning warns of electrostatic discharge which can damage the equipment.

Installation and maintenance work

These warnings are intended for all who work on the thyristor power controller, the cables, or the connected equipment. Ignoring the instructions can cause physical injury or death and/or damage to the equipment.

WARNING

- **Only qualified electricians are allowed to install and maintain the thyristor power controller!**
- Never work on the thyristor power controller, the cables, or the connected equipment when main power is applied.
- Always ensure by measuring with a multimeter (impedance at least 1 MΩ) that:
  1. Voltage between thyristor power controller input phases U1, V1, W1 and the frame is close to 0 V.
  2. Voltage between thyristor power controller output phases U2, V2, W2 and the frame is close to 0 V.
- Do not work on the control cables when power is applied to the thyristor power controller or to the external control circuits. Externally supplied control circuits may cause dangerous voltages inside the thyristor power controller even when the main power on the thyristor power controller is switched off.
- Do not make any insulation resistance or voltage withstand tests on the thyristor power controller.
- Isolate the cables to the equipment from the thyristor power controller when testing the insulation resistance or voltage withstand of the cables or the equipment.
- When reconnecting the cables to the equipment, always check that the U2, V2, W2 cables are connected with the proper terminal.

Notes:
- The output phase cable terminals on the thyristor power controller are at a dangerously high voltage when the main power is on.
- Depending on the external wiring, dangerous voltages (115 V, 220 V or 230 V) may be present on the relay outputs of the thyristor power controller (e.g., XRO1 … XRO3).
- DCT880 with enclosure extension: Before working on the thyristor power controller, isolate the whole thyristor power controller system from the supply.

Grounding

These instructions are intended for all who are responsible for the grounding of the thyristor power controller. Incorrect grounding can cause physical injury, death and/or equipment malfunction and increase electromagnetic interference.

WARNING
- Ground the thyristor power controller, the connected equipment, and adjoining devices to ensure personnel safety in all circumstances, and to reduce electromagnetic emission and pick-up.
- Make sure that grounding conductors are adequately sized and marked as required by safety regulations.
- In a multiple thyristor power controller installation, connect each thyristor power controller separately to protective earth (PE).
- Minimize EMC emission and make a 360° high frequency grounding (e.g., conductive sleeves) of screened cable entries at the cabinet lead-through plate.

Notes:
- Power cable shields are suitable as equipment grounding conductors only when adequately sized to meet safety regulations.
- As the normal leakage current of the thyristor power controller is higher than 3.5 mA_{AC} or 10 mA_{DC} (stated by EN 50178, 5.2.11.1), a fixed protective earth connection is required.

Printed circuit boards

These instructions are intended for all who handle the circuit boards. Ignoring the following instructions can cause damage to the equipment.

WARNING
- The printed circuit boards contain components sensitive to electrostatic discharge. Wear a grounding wristband when handling the boards. Touch the boards only when necessary.
- Grounding wristband:

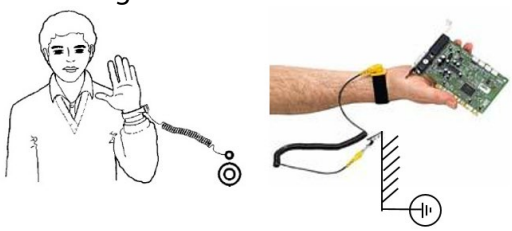

- ABB order no.: 3ADV050035P0001

Mechanical installation

These notes are intended for all who install the thyristor power controller. Handle the unit carefully to avoid damage and injury.

WARNING
- DCT880 sizes T4 ... T8:
  - The thyristor power controller is heavy. Lift the unit by lifting lugs only.
  - The unit's center of gravity is high. Do not tilt the unit. The unit will overturn from a tilt of about 6 degrees. An overturning unit can cause physical injury.

  - Do not lift the unit by the front cover.
  - Place units T4 ... T5 only on their back.
- Make sure that dust from drilling does not enter the thyristor power controller when installing. Electrically conductive dust inside the unit may cause damage or lead to malfunction.
- Ensure sufficient cooling.
- Do not fasten the thyristor power controller by riveting or welding.

Operation

These warnings are intended for all who plan the operation of the thyristor power controller or operate the thyristor power controller. Ignoring the instructions can cause physical injury or death and/or damage to the equipment.

WARNING

- Before adjusting the thyristor power controller and putting it into service, make sure that all connected equipment is suitable for operation throughout the voltage/current range provided by the thyristor power controller.
- Do not control the connected equipment with the disconnecting device (disconnecting mains); instead, use the control panel keys and , or commands via the I/O board of the thyristor power controller.
- Mains connection:
  You can use a disconnect switch (with fuses) to disconnect the electrical components of the thyristor power controller from the mains for installation and maintenance work. The type of disconnect switch used must be as per EN 60947-3, Class B, so as to comply with EU regulations, or a circuit-breaker type which switches off the load circuit by means of an auxiliary contact causing the breaker's main contacts to open. The mains disconnect must be locked in its "OPEN" position during any installation and maintenance work.
- EMERGENCY POWER OFF buttons must be installed at each control desk and at all other control panels requiring an emergency off function. Pressing the Stop button on the control panel of the thyristor power controller will not cause an emergency off by the thyristor power controller and it will not disconnect the thyristor power controller from any dangerous potential.
- To avoid unintentional operating states, or to shut the unit down in case of any imminent danger according to the standards in the safety instructions it is not sufficient to merely shut down the thyristor power controller via signals Run or Enable or from control panel or PC tool.
- Intended use:
  The operating instructions cannot take into consideration every possible case of configuration, operation, or maintenance. Thus, they mainly give such advice only, which is required by qualified personnel for normal operation of the machines and devices in industrial installations.
  If in special cases the electrical machines and devices are intended for use in non-industrial installations - which may require stricter safety regulations (e.g., protection against contact by children or similar) - these additional safety measures for the installation must be provided by the customer during assembly.

Note:

- When the control location is not set to Local, the Stop key on the control panel will not stop the thyristor power controller. To stop the thyristor power controller using the control panel, press the Loc/Rem key and then the Stop key .

Disclaimers

Generic disclaimers

The manufacturer shall have no obligation with respect to any product which:

- (i) Has been improperly repaired or altered.
- (ii) Has been subjected to misuse, negligence, or accident.
- (iii) Has been used in a manner contrary to the manufacturer’s instructions.
- (iv) Has failed as a result of ordinary wear and tear.

The information in this document is subject to change without notice and should not be construed as a commitment by ABB.

Cybersecurity disclaimer

This product is designed to be connected to and to communicate information and data via a network interface. The HTTP protocol, which is used between PC tool (Drive Composer) and product, is an unsecured protocol. For independent and continuous operation of the product such connection via network to a commissioning tool is not necessary. However, it is the customer's sole responsibility to provide and continuously ensure a secure connection between the product and the customer network or any other network (as the case may be). The customer shall establish and maintain any appropriate measures (such as but not limited to the installation of firewalls, prevention of physical access, application of authentication measures, encryption of data, installation of anti-virus programs, etc.) to protect the product, the network, its system, and the interface against any kind of security breaches, unauthorized access, interference, intrusion, leakage and/or theft of data or information.
Notwithstanding any other provision to the contrary and regardless whether the contract is terminated or not, ABB and its affiliates are under no circumstances liable for damages and/or losses related to such security breaches, any unauthorized access, interference, intrusion, leakage and/or theft of data or information.

User lock

For improved cybersecurity, it is highly recommended to set a master pass code to prevent e.g., the changing of parameter values and/or the loading of firmware and other files.
With several units, set a unique pass code for each unit.

WARNING

ABB will not be liable for damages or losses caused by the failure to activate the user lock using a new pass code. See chapter Cybersecurity disclaimer.

To activate the user lock for the first time:

- Set 96.02 Pass code = 10,000,000. This will make parameters 96.100 … 96.102 visible.
- Enter a new pass code into 96.100 Change user pass code. Always use eight digits; if using Drive Composer, finish with Enter.
- Confirm the new pass code in 96.101 Confirm user pass code.

WARNING

Store the pass code in a safe place! The user lock cannot be opened, even by ABB, if the pass code is lost.

- In 96.102 User lock functionality, define the actions that you want to prevent. Our recommendation is to select all the actions unless otherwise required by the application.
- Enter an invalid (random) pass code into 96.02 Pass code.
- Use 96.08 Control board boot or cycle the auxiliary power.
- Check, that parameters 96.100 … 96.102 are hidden. If they are not, enter another random pass code into 96.02 Pass code.

To reopen the lock, enter the pass code into 96.02 Pass code. This will again make parameters 96.100 … 96.102 visible.

Documentation

The structure of the documentation is according to the following system:

- The DCT880 Manual (3ADW000431) contains information about
  - Unit dimensions, electronic boards, fans, and auxiliary parts.
  - Mechanical and electrical installation.
  - Firmware and parameter settings.
  - Start-up and maintenance of the entire thyristor power controller.
  - Faults, warnings, and information for trouble shooting.
- The DCT880 Service Manual (3ADW000449) contains information for maintenance and repair of the thyristor power controller.
- Additional information about technical accessories (e.g., hardware extension or fieldbus adapter) are handled by separate manuals, see chapter List of manuals.

DCT880 Information

All Information about the DCT880 is also available on the internet like:

- DCT880 documentation.
- PC tool (Drive Composer) for parameterization, commissioning, and service.
- Drive Composer pro for firmware download.
- DCT880 firmware.

See the DCT880 sales toolbox.

Terms and abbreviations

Term/Abbreviation	Definition
AC 800M	Type of programmable controller manufactured by ABB.
ACS-AP-I	Types of control panels.
ACS-AP-W	**Attention:** For the DCT880 the control panel is **not** part of the standard delivery. It needs to be added using either plus code +J404 ACS-AP-I or +J429 ACS-AP-W.
Adaptive Program (AP)	Adaptive Program. See Adaptive programming, Application guide (3AXD50000028574).
AI	Analog input. Interface for analog input signals.
AO	Analog output. Interface for analog output signals.
Application program	Program written by the Drive Application Builder. See Drive (IEC61131-3) application programming manual (3AUA0000127808).
Control unit	Contains the electronics and I/O connections. The control unit is connected to the power unit.
Converter	Converter to control DC loads.
D2D	Drive-to-Drive/Device-to-Device. Is a communication link between ABB equipment.
DCS580	A product family of ABB drives.
DCS880	A product family of ABB drives.
DCSLink	Communication between the armature converter and the field exciters or 12-pulse communication.
DCT880	A product family of ABB drives (thyristor power controller).
DDCS	Distributed Drives Communication System. A protocol used in communication between ABB equipment.
DI	Digital input. Interface for digital input signals.
DIO	Digital input/output. Interface that can be used as a digital input or output.
DO	Digital output. Interface for digital output signals.
Drive	Converter to control DC motors/loads.
DriveBus	A communication link used between ABB equipment.
DriveAP	Adaptive Programming. See Adaptive programming, Application guide (3AXD50000028574).

Term/Abbreviation	Definition
Drive Application Builder	Tool to write application programs. See Drive (IEC61131-3) application programming manual (3AUA0000127808).
Drive Composer	PC tool for commissioning and maintenance of ABB equipment.
EFB	Embedded fieldbus.
FAIO-01	Optional analog I/O extension module.
FBA	Fieldbus adapter.
FCAN-01	Optional CANopen adapter.
FCNA-01	Optional ControlNet adapter.
FDCO-0x	Optional DDCS communication module.
FDIO-01	Optional digital I/O extension module.
FDNA-01	Optional DeviceNet adapter.
FEA-03	Optional I/O extension module.
FECA-01	Optional EtherCAT® adapter.
FEIP-21	Optional EtherNet/IP fieldbus adapter module.
FEN-01	Optional TTL encoder interface module.
FEN-11	Optional absolute encoder interface module.
FEN-21	Optional resolver interface module.
FEN-31	Optional HTL encoder interface module.
FENA-11	Optional Ethernet/IP, Modbus/TCP and PROFINET IO adapter.
FENA-21	Optional dual-port Ethernet/IP, Modbus/TCP and PROFINET IO adapter.
FEPL-02	Optional POWERLINK adapter.
FIO-01	Optional digital I/O extension module.
FIO-11	Optional analog I/O extension module.
FMBT-21	Optional Modbus/TCP adapter module.
FPBA-01	Optional PROFIBUS DP adapter.
FPNO-21	Optional PROFINET fieldbus adapter module.
FSCA-01	Optional Modbus/RTU adapter.
FSE-31	Optional HTL safety encoder interface module.
FSO-21	Optional safety functions module.
FSPS-21	Optional PROFIsafe safety functions module.
HTL	High-threshold logic.
I/O	Input/Output.
ModuleBus	A communication link used between ABB equipment. Can be connected to the optical ModuleBus link.
Network control	With fieldbus protocols based on the Common Industrial Protocol (CIP™), such as DeviceNet and Ethernet/IP, denotes the control of the connected equipment using the Net Ctrl and Net Ref objects of the ODVA AC/DC Drive Profile. For more information, see www.odva.org, and the following manuals: FDNA-01 DeviceNet adapter module User's manual (3AFE68573360). FENA-11/-21 Ethernet adapter module User's manual (3AUA0000093568).
Off3 (emergency stop)	Off3 (emergency stop) with configurable deceleration time according to cat. 1.
OPL	Optical power link. Protocol used in communication between the control unit and the power unit.
Parameter	User-adjustable operation instruction.
PID controller	Proportional-integral-derivative controller. E.g., the speed/voltage/temperature control is based on a PID algorithm.
PLC	Programmable logic controller.
Power unit	Contains the power electronics and power connections. The control unit is connected to the power unit.
PTC	Positive temperature coefficient.
PU	See power unit.
RFG	Ramp function generator.

Term/Abbreviation	Definition
RO	Relay output. Interface for a digital output signal. Implemented with a relay.
Signal	Value measured or calculated. It can also contain status information. Most signals are read-only, but some (especially counter-type signals) can be reset.
SS1	Safe stop 1.
SSI	Synchronous serial interface.
STO	Safe torque off.
TTL	Transistor-transistor logic.
UPS	Uninterruptible power supply. Power supply equipment with battery to maintain output voltage during power failure.
Unit	Thyristor power controller to control heating loads.

Before use

Acceptance inspection

Unpacking the unit

Open the box, remove the shock dampers, separate manual, and accessories.

Attention: Do not lift the thyristor power controller by the front cover!

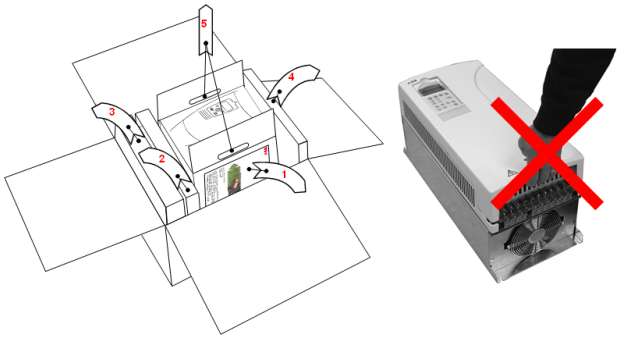

Delivery check

Check that there are no signs of damage. Before attempting installation and operation, check the information on the nameplate of the thyristor power controller to verify that the unit is of the correct type. The label includes an IEC rating and CE markings, a type code, and a serial number, which allow individual identification of each unit. The remaining digits complete the serial number so that there are no two units with the same serial number:

	ABB AG			$U_{1\,(IEC)}$ 3	2 ~ 110 - 525 V_{AC}	f 7	50/60 Hz	Made in Germany
	Type: DCT880-W02-0100-05X0			$U_{2\,(IEC)}$ 4	2 ~ 0 - 525 V_{AC}	Airflow 8	360 m^3/h	
	Ser No:6136105C23465041 1	P	69 kW	$U_{1\,(UL)}$ 5	2 ~ 110 - 525 V_{AC}	SCCR (IE 9	65 kA	
	2	P_{Loss}	0.8 kW	$U_{2\,(UL)}$ 6	2 ~ 0 - 525 V_{AC}	I_1, I_2 10	100 A	

Production year 2023 and week 46

1: Rated power
2: Losses
3: Rated input voltage for IEC
4: Rated output voltage for IEC
5: Rated input voltage for UL
6: Rated output voltage for UL
7: Mains frequency
8: Airflow
9: **S**hort **C**ircuit **C**urrent **R**ating
10: Rated input/output current

Type code

The type code contains information on the specifications and configuration of the thyristor power controller:

The thyristor power controller's basic type code: DCT880-aab-cccc-ddef + plus code			
Product family:	DCT880		
Type:	aa	= W0	Standard unit
		= A0	Cabinets
Power part type:	b	= 2	Two-leg anti-parallel circuit
		= 3	Three-leg anti-parallel circuit
Unit type:	cccc	=	Rated AC current (RMS) per leg
Rated AC voltage:	dd	= 04	110 V_{AC} … 415 V_{AC} (IEC)/400 V_{AC} (UL)
		= 05	110 V_{AC} … 500 V_{AC} (IEC)/525 V_{AC} (UL)
		= 07	315 V_{AC} … 690 V_{AC} (IEC)/600 V_{AC} (UL)
		= 08	360 V_{AC} … 800 V_{AC}
		= 10	450 V_{AC} … 990 V_{AC}
Power connection:	e	= X	Standard T1 … T6
		= R	Mains connection and CTs on the right T8
Revision code:	f	= 0	T1 … T5: With SDCS-PIN-H11 T6: Standard (equipped with SDCS-CON-H01, SDCS-POW-H01, 2 x SDCS-PIN-H51, SDCS-PIN-H41 and SDCS-CMI-H02)
		= A	T1 … T5: With SDCS-PIN-H11A
		= B	T5: New cooling fan R2E250-RE04-10
		= S	T6: Special design (equipped with SDCS-CON-H01, SDCS-PIN-H11A, SDCS-CMI-H02, SDCS-REB-H11 and SDCS-PIN-46)
		= T	T6: Special design (equipped with SDCS-CON-H01, SDCS-PIN-H11A, SDCS-CMI-H02, SDCS-REB-H11 and SDCS-PIN-46) and new cooling fan R2E250-RE04-10

Precautions for using thyristor power controllers

WARNING
Only a qualified electrician may carry out the work. Follow the Safety instruction on the first pages of this manual. Ignoring the safety instructions can cause injury or death.
Make sure that the thyristor power controller is disconnected from the mains (input power) during installation. If the thyristor power controller was already connected to the mains, wait for 5 minutes after disconnecting mains power.

Checking the insulation of the assembly

Every thyristor power controller was tested for insulation between the main circuit and the frame (2500 V rms 50 Hz for 1 second) at the factory. Therefore, do not make any voltage tolerance or insulation resistance tests (e.g., hi-pot or megger) on any part of the thyristor power controller. Check the insulation of the assembly as follows.

WARNING
Check the insulation before connecting the thyristor power controller to the mains. Make sure that the thyristor power controller is disconnected from the mains (input power).

- Check that the cables to the connected equipment are disconnected from the thyristor power controller output phases U2, V2 and W2.
- Measure the insulation resistances of the cables and the connected equipment between each circuit (U2, V2 and W2) and Protective Earth (PE) by using a measuring voltage of 1 kV DC. The insulation resistance must be higher than 1 MΩ.

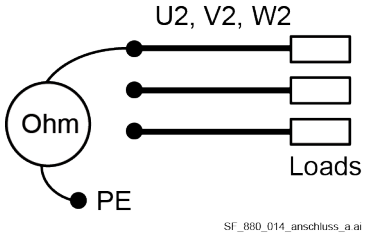

Supply voltage

Check voltage levels of:
- Auxiliary voltage (XAUX on SDCS-PIN-H11 or XAUX on SDCS-POW-H01).
- Cooling fan terminals.
- Mains voltage connected to U1, V1, W1.

Connecting the power cables

Check:
- Grounding and screening of power cables see chapter Cabling.
- Cross sectional areas and tightening torques of power cable, see chapter Power terminals.

WARNING
The XSTO terminals must not be used for thyristor power controllers.
They are not offering any certified safety functionality.

Environmental conditions

This chapter contains the technical specifications of the thyristor power controller, e.g., the ratings, sizes and technical requirements, provisions for fulfilling the requirements for CE and other markings and warranty policy.

System connection	
Voltage, 3-phase:	110 … 990 V_{AC} acc. to IEC 60038 110 … 990 V_{AC} acc. to UL 508
Voltage deviation:	IEC: -10 % +15 % continuous; ±20 % short time (0.5 to 30 cycles) UL: ±10 % continuous; ±15 % short time (0.5 to 30 cycles)
Rated frequency:	50 Hz or 60 Hz
Static frequency deviation:	50 Hz ±2 %; 60 Hz ±2 %
Dynamic frequency range:	50 Hz: ±5 Hz; 60 Hz: ± 5 Hz
df/dt:	17 %/s
Degree of protection	
Thyristor power controllers and options (fuses, etc.):	IEC: IP 00; acc. to IEC/EN 60529 UL: open type acc. to UL 61800-5-1
Overvoltage category (all inputs):	III acc. to IEC 60664-1
Protective class:	I acc. to IEC 61800-5-1
Paint finish	
Thyristor power controllers:	Body RAL 7012 Cover RAL 9017 & RAL 9002
Installation category	
Power network:	installation category III up to 600 V installation category II up to 690 V
Cooling fan supply:	230 V_{AC} (T4, T5, T6 @ 1300 A) 400 ... 500 V_{AC} (T6 @ 1750 A) 400 V_{AC} (T8)

Environmental limit values	
Permissible cooling air temperature	
With rated AC current (forced ventilation):	0 … +40°C
With different AC current see figure below:	+30 … +55°C
For options:	0 … +40°C
Relative humidity (at +5 … +40°C):	5 … 95 %, no condensation
Relative humidity (at 0 … +5°C):	5 … 50 %, no condensation
Change of the ambient temperature	< 0.5°C/minute
Storage temperature:	-40 … +55°C
Transport temperature:	-40 … +70°C
Pollution degree (IEC 60664-1, IEC 60439-1):	2
Site elevation	
< 1000 m above mean sea level:	100 %, no current reduction
> 1000 m above mean sea level:	current reduction, see figure below
Duty cycle:	uninterrupted duty continuous operation
Form designation:	form 4
Utilization categories	
AC51:	non inductive or slightly Inductive loads, resistance furnaces
AC56a:	switching of transformers

Size	Sound pressure level L_P (1 m distance)	Vibration (EN 60068-2-6)			Short circuit withstand rating
T1	55 dBA	3 mm, 2 ... 9 Hz 1 g, 9 ... 200 Hz			The DCT880 is suitable for use in a circuit capable of delivering not more than: 65 kA rms symmetrical ampere at a maximum of 690 V_{AC}.
T2	55 dBA				
T3	60 dBA				
T4	66 ... 70 dBA, depending on fan				
T5	75 dBA	0,3 mm, 2 ... 9 Hz 0,1 g, 9 ... 200 Hz			
T6	70 dBA				The DCT880 is suitable for use in a circuit capable of delivering not more than: 100 kA rms symmetrical ampere.
T8	82 dBA				

Mean Time Between Failure (MTBF)

The **M**ean **T**ime **B**etween **F**ailure calculation for units in operation is based on standard SN 29500. All failures occurred during shipping and commissioning are excluded from the calculation. The MTBF rates are calculated considering:

- That the preventive maintenance plan is followed.
- A 40°C ambient temperature.

DCT880-W0x size T1 … T5 = 34.5 years.
DCT880-W0x size T6 = 31.0 years.
DCT880-W0x size T8 = 31.0 years.

Mean Time to Repair (MTR)

The current **M**ean **T**ime to **R**epair value for the DCT880 is:
DCT880-W02 size T1 … T5 = 1.0 hours.
DCT880-W03 size T1 … T5 = 1.5 hours.
DCT880-W02 size T6 = 1.5 hours.
DCT880-W03 size T6 = 2.0 hours.
DCT880-W0x size T8 = 3.0 hours.

Regulatory compliance

The thyristor power controller modules are designed for use in industrial environments. In EEA countries, the components fulfil the requirements of the EU directives, see table below.

European Union Directive	Manufacturer's assurance	Harmonized Standards
Low Voltage Directive		
2014/35/EU	Declaration of Conformity	EN 60947-4-3:2014
EMC Directive		
2014/30/EU	Declaration of Conformity	EN 60947-4-3:2014
RoHS & WEEE		
2011/65/EU & 2012/19/EU	Declaration of Conformity	

North American Standards

In North America, the system components fulfil the requirements as shown below.

DCT880-W02/W03 module sizes T1... T6 up to 800 V_{AC}.

	US	Canada
Standard	UL 508: 2018	CAN/CSA C22.2 No. 14-2018
Certificate no.	(TÜV-SÜD) No. U10 045204 0015 Rev. 01	

UK Legislation - UKCA

In the UK, the system components fulfil the following regulations.

DCT880-W02/W03 module sizes T1... T8

Electrical Equipment (Safety) Regulations	2016 UK Safety
Electromagnetic Compatibility Regulations 2016	2016 UK EMC
The Restriction of the Use of Certain Hazardous Substances in Electrical and Electronic Equipment Regulations	2012 UK RoHS

Effect of the site elevation above mean sea level on the thyristor power controller's load capacity:

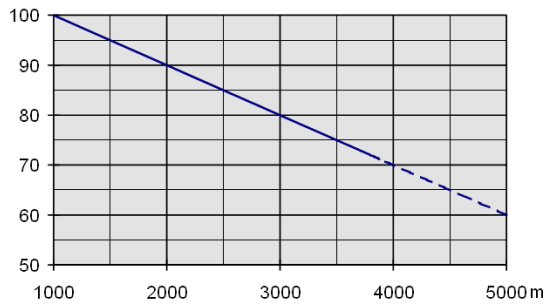

Current reduction to % of nominal thyristor power controller current

Effect of the ambient temperature on the thyristor power controller's load capacity:

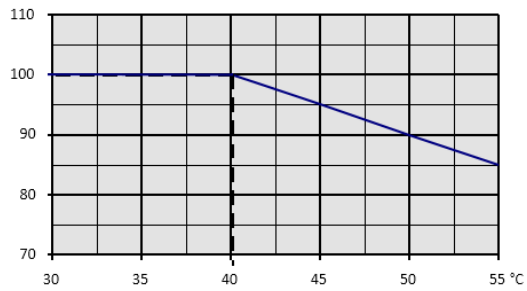

Current reduction to % of nominal thyristor power controller current

Effect of site elevation and ambient temperature on the thyristor power controller's load capacity

Ambient temperature	Site elevation in m above M.S.L.			
	≤ 1000 m	≤ 2000 m	≤ 3000 m	≤ 4000 m
30°C	100 %	100 %	90 %	80 %
35°C	100 %	95 %	85 %	75 %
40°C	100 %	90 %	80 %	
45°C	95 %	85 %		
50°C	90 %	80 %		
55°C	85 %			

Current reduction to % of nominal thyristor power controller current

Ratings

Voltage ratings

Mains voltage U_{V1N} [V_{AC}]	Output voltage U_{V2N} [V_{AC}]	Voltage class
110	110	04
230	230	04
380	380	04
400	400	04
415	415	04
440	440	05
460	460	05
480	480	05
500	500	05
525	525	05
575	575	07
600	600	07
660	660	07
690	690	07
800	800	08
990	990	10

400 V/525 V units, current ratings, power ratings and power losses

Size	I [A] (RMS)	P_{out} [kW] ①	P_{out} [kW] ②	P_{loss} W03 [kW]	P_{loss} W02 [kW]	Air flow [m^3/h]	Auxiliary voltage
T1	20	13	17	0.08	0.06	no fan	+24 V_{DC}, ±10 % ③
	35	24	30	0.14	0.10		
	55	38	47	0.24	0.17	360	
	80	55	69	0.30	0.21		
	100	69	86	0.36	0.24		
	125	86	108	0.40	0.27		
T2	160	110	138	0.55	0.37		
	200	138	173	0.63	0.43		
	245	169	212	0.80	0.54		
T3	325	225	281	0.93	0.63		
	360	249	311	1.06	0.71		
	420	291	363	1.28	0.86	720	
T4	550	381	476	1.64	1.12	925	
	675	467	584	2.04	1.39		
	740	512	640	2.27	1.54	1860	
T5	890	616	770	2.89	-	800	
	960	-	-	-	2.16		
T6 special design	1300	900	1125	4.60	3.50	800	
	1750	1212	1515	5.80	4.30	1600	
T6 standard	1300	900	1125	4.60	3.50	800	230V_{AC}/115V_{AC}, -15 %/+10 %
	1750	1212	1515	5.80	4.30	1600	
T8	2100	1455	1819	6.70	-	4000	400 V_{AC}, ±10 %
	2700	1870	2338	8.10	-		
	3200	2217	2771	9.60	-		
	4200	2910	3637	11.40	-		

① Power ratings for a 3-phase load in star configuration at 400 V_{AC} (e.g., √3 x 20 A x 400 V/1000 = 13 kW).
② Power ratings for a 3-phase load in star configuration at 500 V_{AC} (e.g., √3 x 20 A x 500 V/1000 = 17 kW).
③ Please be advised, that each DCT880 should have its own 24 V_{DC} power supply (T1 … T5 and T6 special design).

690 V units, current ratings, power ratings and power losses

Size	I [A] (RMS)	P_{out} [kW] ④	P_{loss} W03 [kW]	P_{loss} W02 [kW]	Air flow [m^3/h]	Auxiliary voltage
T1	35	42	0.10	0.07	360	+24 V_{DC}, ±10 % ③
	80	95	0.24	0.16		
	100	120	0.31	0.21		
T2	160	191	0.50	0.34		
	200	239	-	0.44		
T3	360	430	1.09	0.73		
T4	630	753	1.88	1.28	925	
T5	890	1064	2.89	-	800	
	960	1147	-	2.16		
T6 special design	1300	1553	5.00	3.80	800	
	1750	2091	5.80	4.30	1600	
T6 standard	1300	1553	5.00	3.80	800	230V_{AC}/115V_{AC}, -15 %/+10 %
	1750	2091	5.80	4.30	1600	
T8	2100	2510	6.80	-	4000	400 V_{AC}, ±10 %
	2700	3227	8.00	-		
	3200	3824	9.50	-		
	3900	4661	11.50	-		

③ Please be advised, that each DCT880 should have its own 24 V_{DC} power supply (T1 … T5 and T6 special design).
④ Power ratings for a 3-phase load in star configuration at 690 V_{AC} (e.g., √3 x 35 A x 690 V/1000 = 42 kW).

800 V units, current ratings, power ratings and power losses

Size	I [A] (RMS)	P_{out} [kW] ⑤	P_{loss} W03 [kW]	P_{loss} W02 [kW]	Air flow [m^3/h]	Auxiliary voltage
T6 standard	1300	1801	5.10	3.90	800	230V_{AC}/115V_{AC}, -15 %/+10 %
	1750	2425	6.50	4.80	1600	
T8	2100	2910	6.80	-	4000	400 V_{AC}, ±10 %
	2700	3741	8.00	-		
	3200	4434	9.50	-		
	3900	5404	11.50	-		

⑤ Power ratings for a 3-phase load in star configuration at 800 V_{AC} (e.g., √3 x 1300 A x 800 V/1000 = 1801 kW).

990 V units, current ratings, power ratings and power losses

Size	I [A] (RMS)	P_{out} [kW] ⑥	P_{loss} W03 [kW]	P_{loss} W02 [kW]	Air flow [m^3/h]	Auxiliary voltage
T8	2100	3601	7.10	-	4000	400 V_{AC}, ±10 %
	2700	4630	8.90	-		
	3200	5487	10.60	-		

⑥ Power ratings for a 3-phase load in star configuration at 990 V_{AC} (e.g., √3 x 2100 A x 990 V/1000 = 3601 kW).

Current ratings and type code

Current ratings per leg with 50 Hz and 60 Hz supplies see below. The current ratings are based on an ambient temperature of maximum 40°C and an elevation of maximum 1000 m above mean sea level:

Size	I (RMS) [A]	Thyristor power controller 400 V/525 V	Thyristor power controller 690 V	Thyristor power controller 800 V	Thyristor power controller 990 V
T1	20	DCT880-W0b-0020-04/05	-	-	-
	35	DCT880-W0b-0035-04/05	DCT880-W0b-0035-07	-	-
	55	DCT880-W0b-0055-04/05	-	-	-
	80	DCT880-W0b-0080-04/05	DCT880-W0b-0080-07	-	-
	100	DCT880-W0b-0100-04/05	DCT880-W0b-0100-07	-	-
	125	DCT880-W0b-0125-04/05	-	-	-
T2	160	DCT880-W0b-0160-04/05	DCT880-W0b-0160-07	-	-
	200	DCT880-W0b-0200-04/05	DCT880-W02-0200-07	-	-
	245	DCT880-W0b-0245-04/05	-	-	-
T3	325	DCT880-W0b-0325-04/05	-	-	-
	360	DCT880-W0b-0360-04/05	DCT880-W0b-0360-07	-	-
	420	DCT880-W0b-0420-04/05	-	-	-
T4	550	DCT880-W0b-0550-04/05	-	-	-
	630	-	DCT880-W0b-0630-07	-	-
	675	DCT880-W0b-0675-04/05	-	-	-
	740	DCT880-W0b-0740-04/05	-	-	-
T5	890	DCT880-W03-0890-04/05	DCT880-W03-0890-07	-	-
	960	DCT880-W02-0960-04/05	DCT880-W02-0960-07	-	-
T6 special design	1300	DCT880-W0b-1300-04/05XS/T	DCT880-W0b-1300-07XS/T	-	-
	1750	DCT880-W0b-1750-04/05XS/T	DCT880-W0b-1750-07XS/T	-	-
T6 standard	1300	DCT880-W0b-1300-04/05X0	DCT880-W0b-1300-07X0	DCT880-W0b-1300-08X0	-
	1750	DCT880-W0b-1750-04/05X0	DCT880-W0b-1750-07X0	DCT880-W0b-1750-08X0	-
T8	2100	DCT880-W03-2100-04/05	DCT880-W03-2100-07	DCT880-W03-2100-08	DCT880-W03-2100-10
	2700	DCT880-W03-2700-04/05	DCT880-W03-2700-07	DCT880-W03-2700-08	DCT880-W03-2700-10
	3200	DCT880-W03-3200-04/05	DCT880-W03-3200-07	DCT880-W03-3200-08	DCT880-W03-3200-10
	3900	-	DCT880-W03-3900-07	DCT880-W03-3900-08	-
	4200	DCT880-W03-4200-04/05	-	-	-

Note: Input current = output current.

Installation and wiring

Installation

Before installation

Install the thyristor power controller in an upright position with the cooling section facing a wall. Check the installation site according to the requirements below. See chapter Dimensions and weights for frame details.

Requirements for the installation site

See chapter Environmental conditions for the allowed operation conditions of the thyristor power controller.

Wall

The wall should be as close to vertical as possible, of non-flammable material and strong enough to carry the weight of the unit. Check that there is nothing on the wall to inhibit the installation.

Floor

The floor or material below the installation must be non-flammable.

Free space around the unit

Around the unit free space is required to enable cooling airflow, service and maintenance see chapter Dimensions and weights.

Cabinet installation

The required distance between parallel units:

Parallel units			Distance
Unit	to	Unit	[mm]
T1 … T4	to	T1 …T4	10
T1 … T4	to	T5	160
T5	to	T5	300
T6	to	T6	500
T8	to	T8	Must be in its own cabinet.

The cooling air entering the unit must not exceed +40°C.

Preventing cooling air recirculation

Prevent air recirculation inside and outside the cabinet

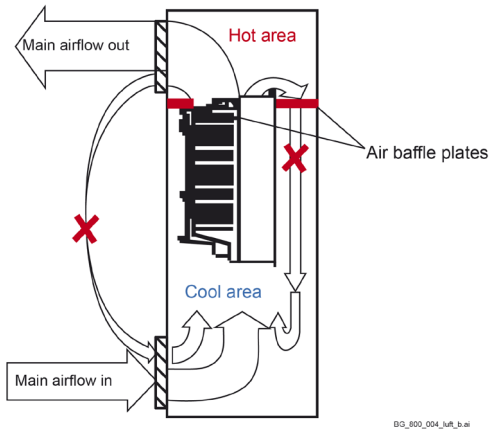

Unit above another

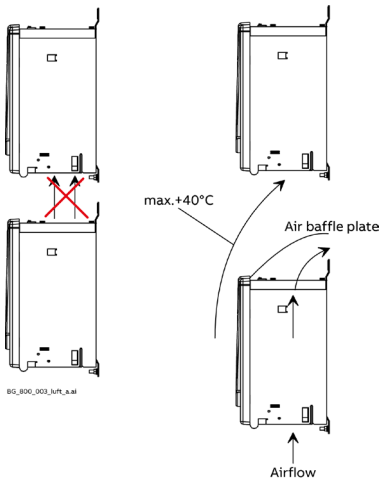

Lead the exhaust cooling air away from the unit above. Distances see chapter Dimensions and weights.

Mounting a T5 unit inside a cabinet

Cooling air inlet

The cooling fan blows the air out of the front, the back, the right and the left of the unit:

Right side air flow Front side air flow Left side air flow Back side air flow

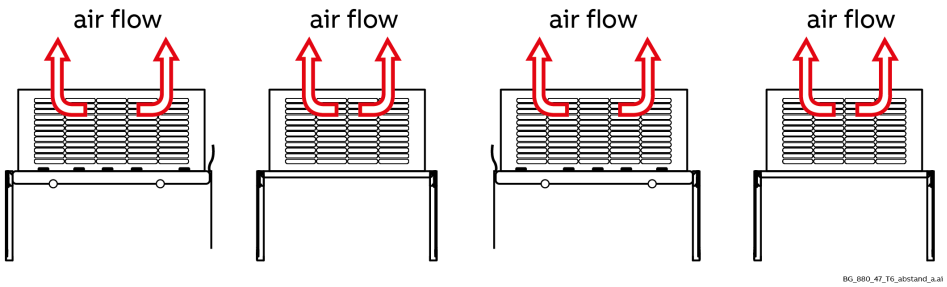

Free space around the unit

In mm:

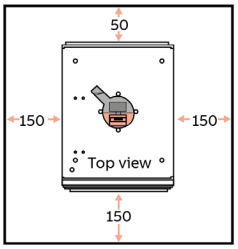

To achieve the back clearance of 50 mm use spacers at the screws.
If no back clearance is possible, the nominal current per leg must be derated by 5 %.

Cooling air outlet

To avoid circulating air inside the cabinet make sure the exhaust air leaves the cabinet.

Mounting the unit:

1. Remove the control panel and design cover:

2. Remove screws (T20) and pull out the fan box:

3. Now all mounting holes are accessible:

Detail top:

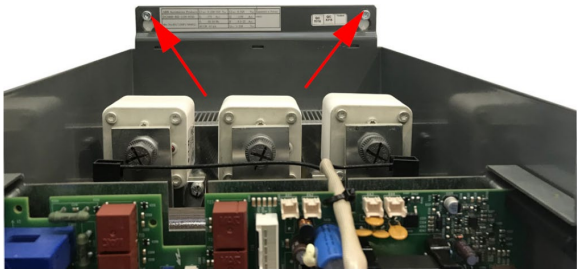

Detail bottom:

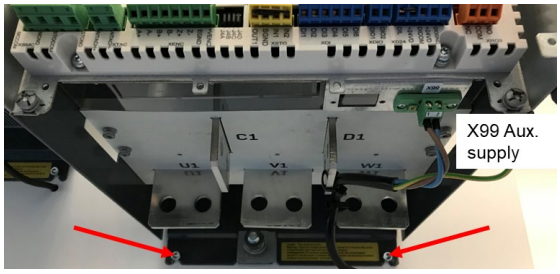

Mounting a T6 unit inside a cabinet

Units size T6 are to be placed on the floor in the cabinet.

Cooling air inlet

The cooling fan takes the air from the back, left, right side and from the bottom of the unit. View from:

Right side Back side Left side

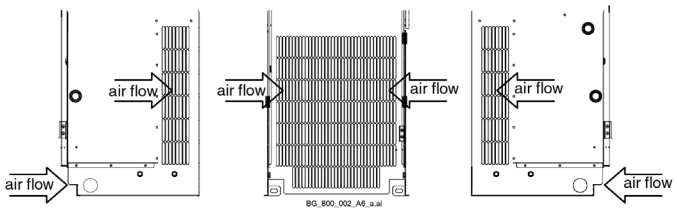

Free space around the unit

Optimum Compromise

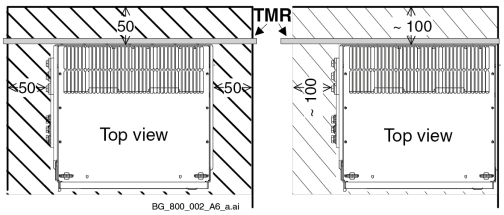

Cooling air outlet

To avoid circulating air inside the cabinet make sure the exhaust air leaves the cabinet.

Mounting the T8 power unit inside a cabinet

Units size T8 are to be placed on the floor in the cabinet.

Cooling air inlet

The cooling fan takes the air from the back, left, right side and from the bottom of the unit. View from:

Front side Left/Right side

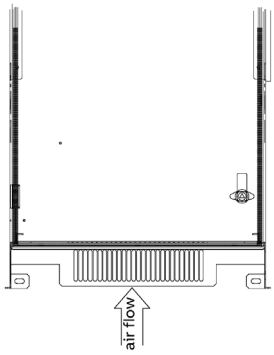

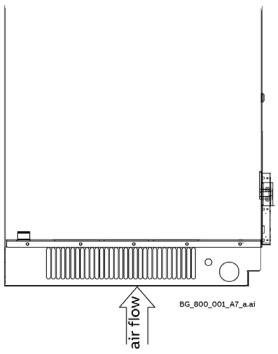

View from bottom

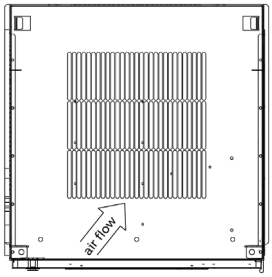

Free space around the unit

Do not place the unit in a corner. In case the fan cannot take the air through the bottom plate of the cabinet none of the remaining entries must be blocked.

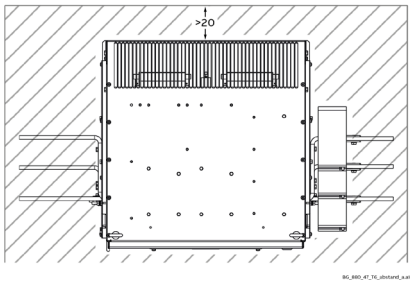

Air entry through the bottom plate:
Make sure the unit gets clean air, because there is no air filter in front of the cooling fan.

Cooling air outlet

To avoid circulating air inside the cabinet make sure the exhaust air leaves the cabinet.

Dimensions and weights

See the dimensional drawings of the DCT880 below. The dimensions are in millimeters.

Size T1

Size	Thyristor power controller	h x w x d [mm]	weight [kg]
T1	DCT880-W0b-0020-0d DCT880-W0b-0035-0d DCT880-W0b-0055-0d DCT880-W0b-0080-0d DCT880-W0b-0100-0d DCT880-W0b-0125-0d	370.5 x 270 x 216	11
	DCT880 plus package	400 x 400 x 380	13 ... 14

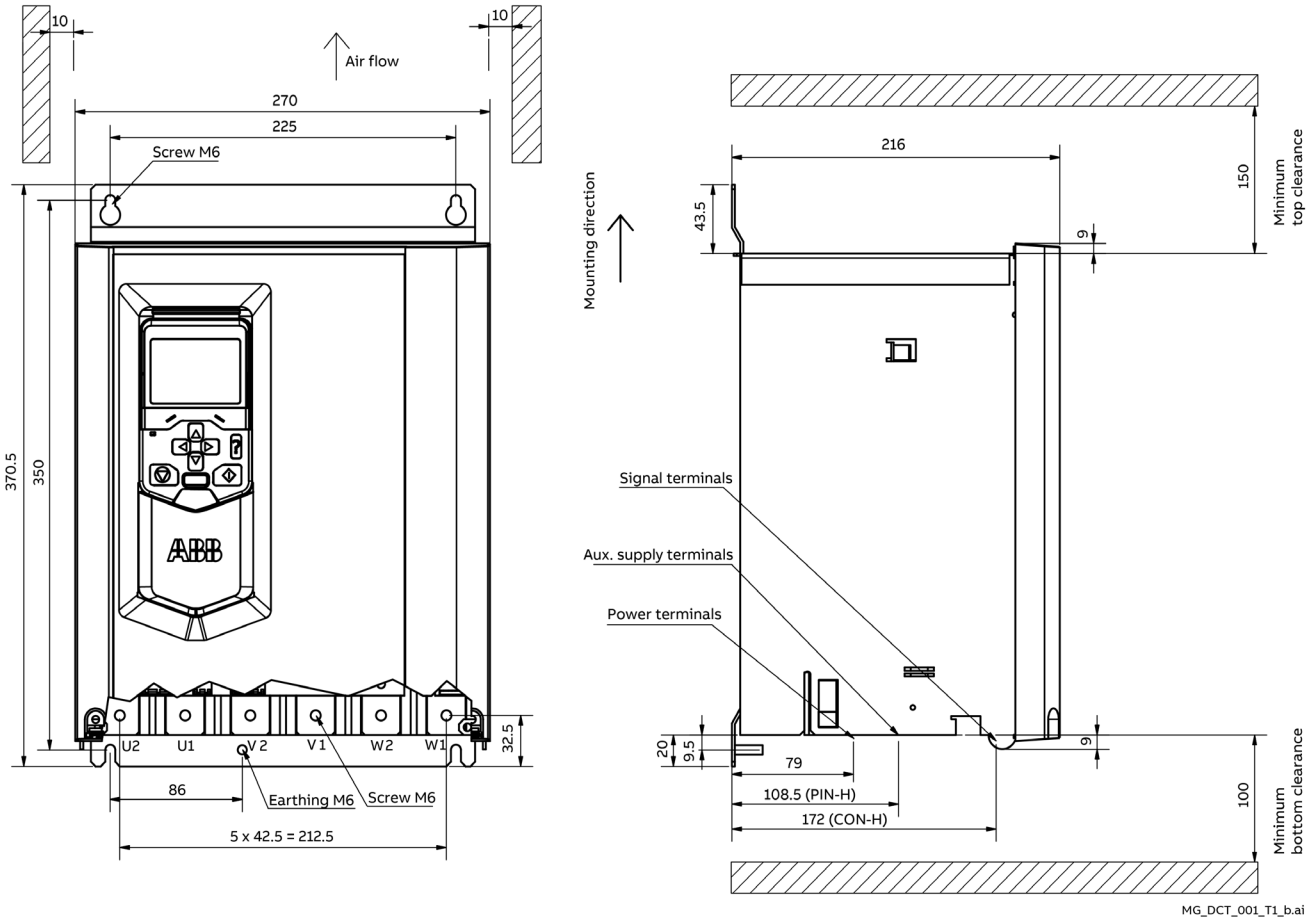

Size T2

Size	Thyristor power controller	h x w x d [mm]	weight [kg]
T2	DCT880-W0b-0160-0d DCT880-W0b-0200-0d DCT880-W0b-0245-0d	370.5 x 270 x 269	16
	DCT880 plus package	400 x 400 x 380	17 ... 18

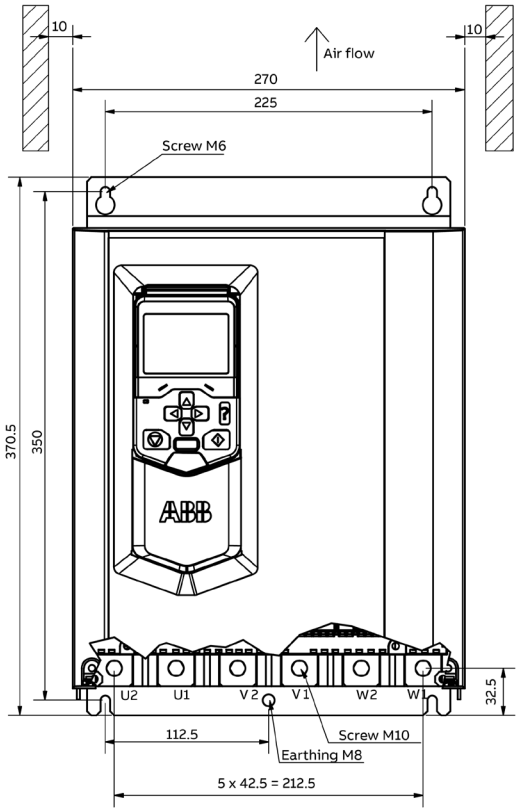

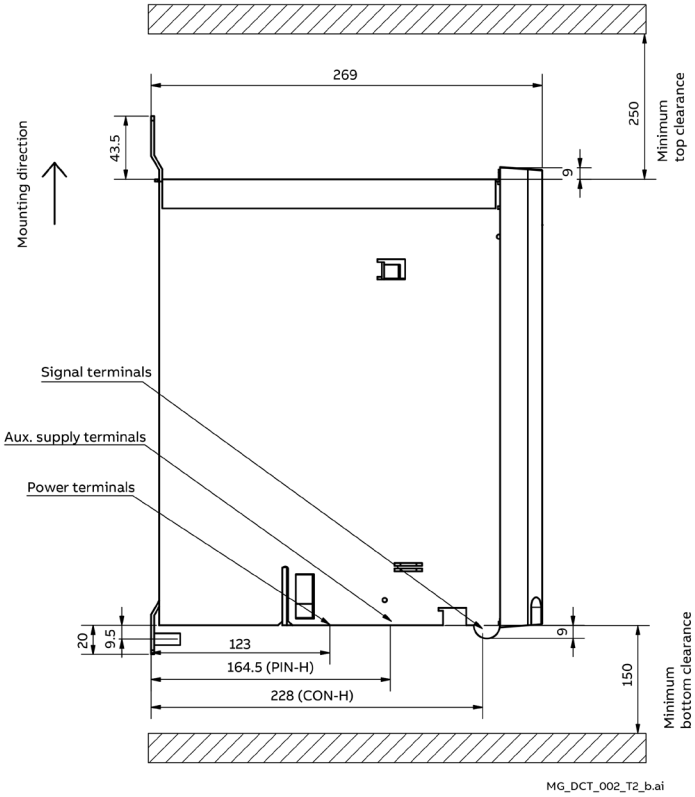

Size T3

Size	Thyristor power controller	h x w x d [mm]	weight [kg]
T3	DCT880-W0b-0325-0d DCT880-W0b-0360-0d DCT880-W0b-0420-0d	466 x 270 x 313	25
	DCT880 plus package	535 x 375 x 350	26 ... 28

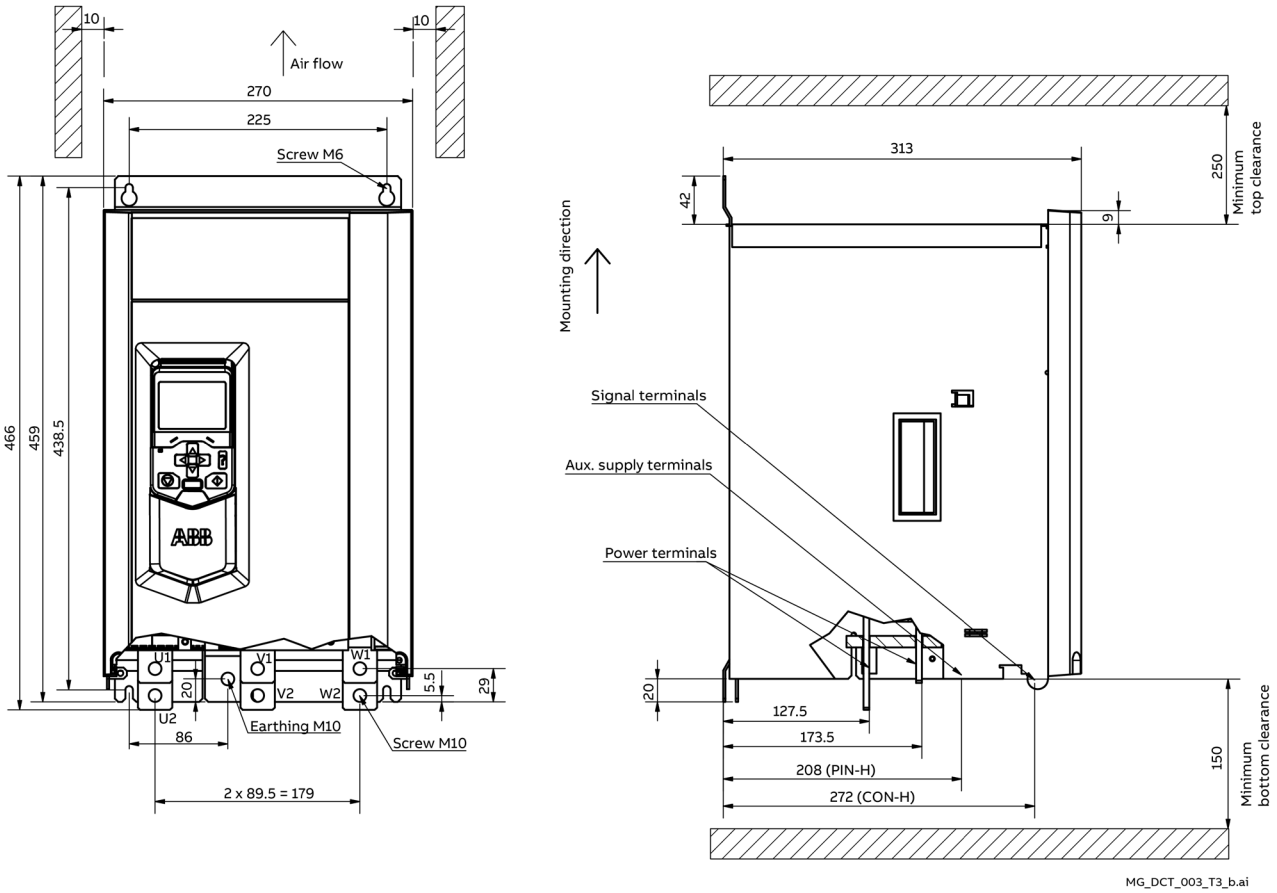

Size T4

Size	Thyristor power controller	h x w x d [mm]	weight [kg]
T4	DCT880-W0b-0550-0d DCT880-W0b-0630-07 DCT880-W0b-0675-0d DCT880-W0b-0740-0d	669 x 270 x 352	38
	DCT880 plus package	775 x 475 x 490	41 ... 44

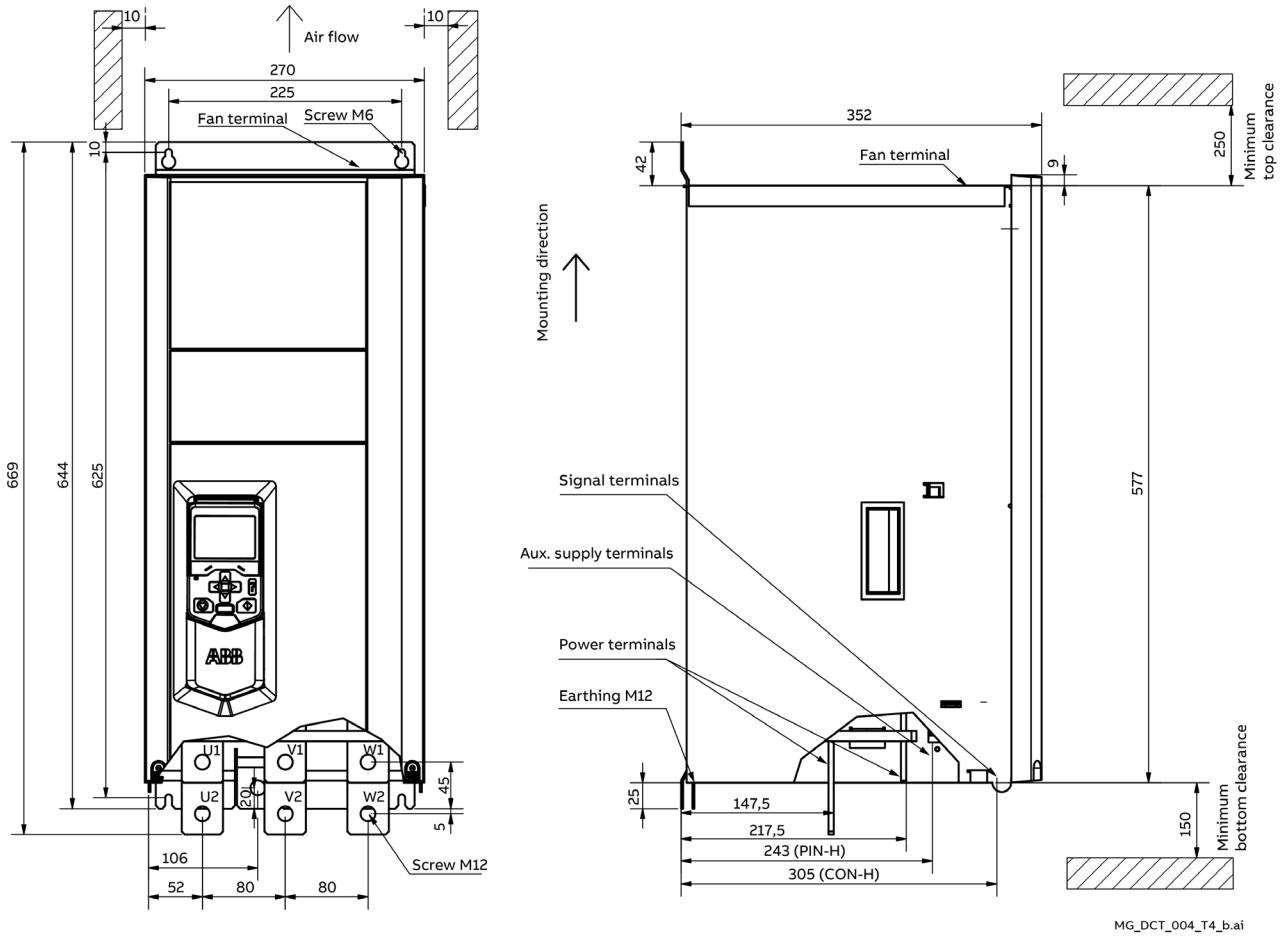

Size T5 (classic fan box)

Size	Thyristor power controller	h x w x d [mm]	weight [kg]
T5	DCT880-W03-0890-0dXA DCT880-W02-0960-0dXA	740.5 x 270 x 368	60
	DCT880 plus package	775 x 475 x 490	62 ... 64

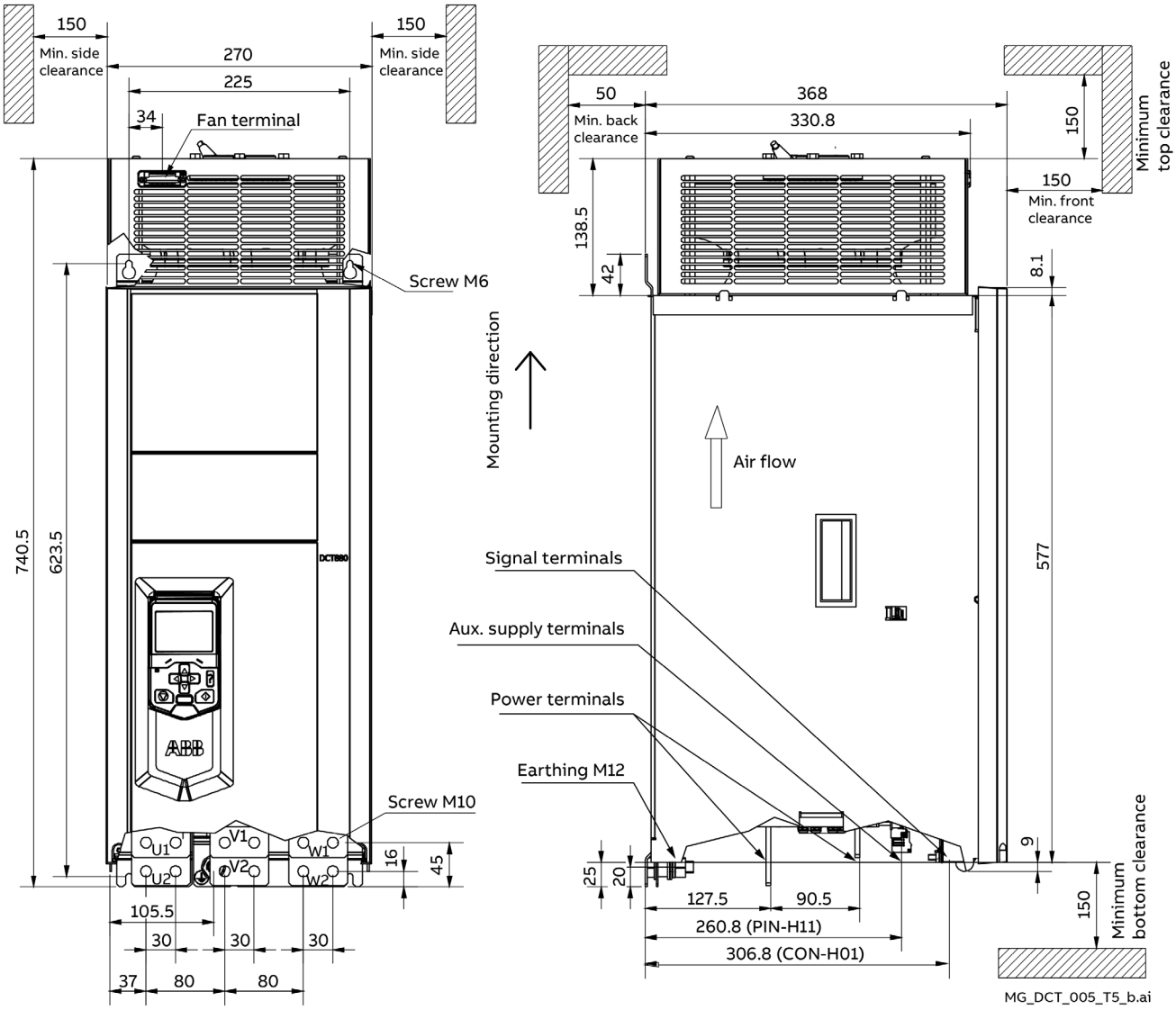

Size T5 (ErP fan box)

Size	Thyristor power controller	h x w x d [mm]	weight [kg]
T5	DCT880-W03-0890-0dXB DCT880-W02-0960-0dXB	771 x 270 x 368	60
	DCT880 plus package	775 x 475 x 490	62 ... 64

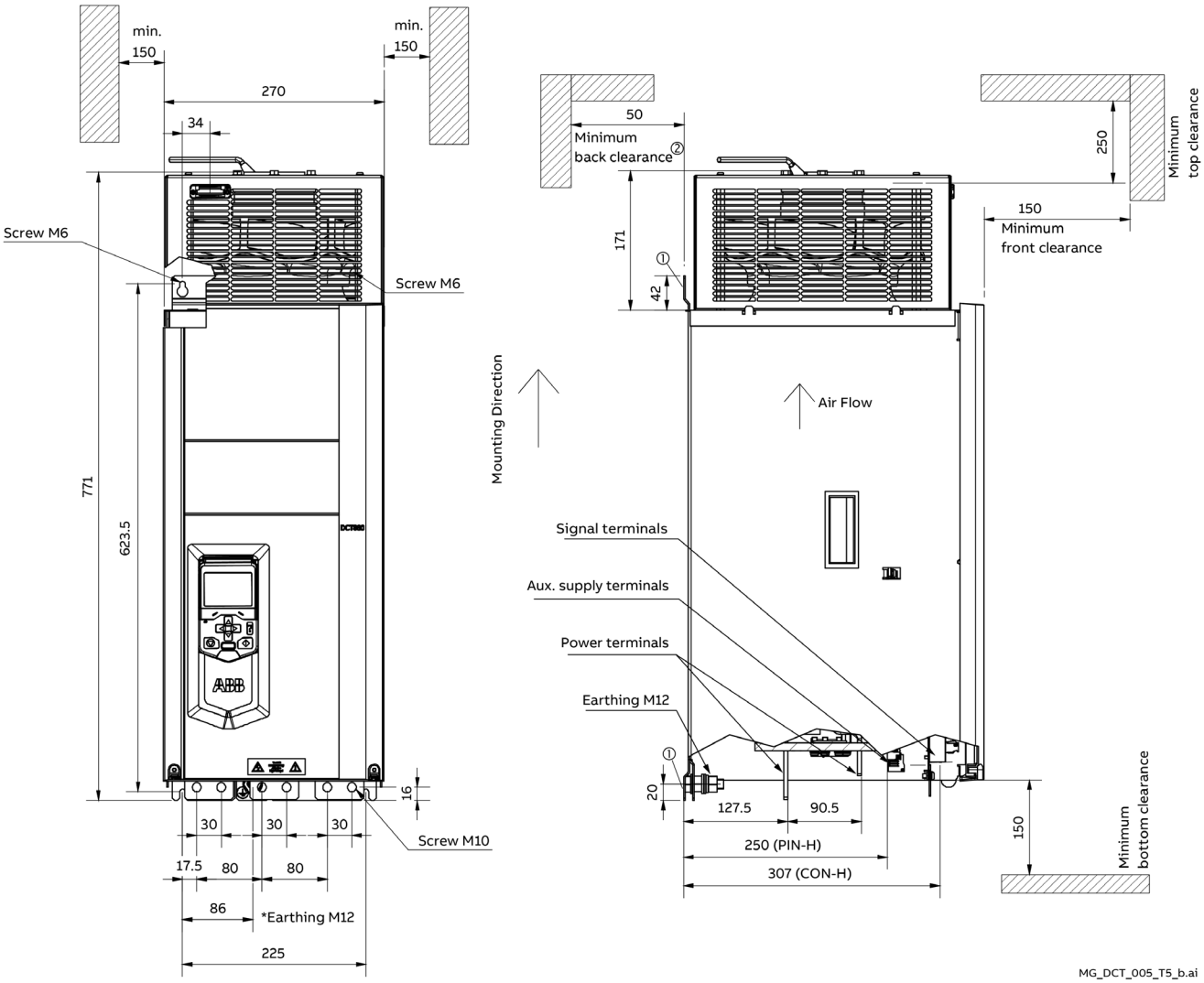

Mounting units size T5 inside a cabinet

① To achieve the back clearance of 50 mm use spacers at the screw.

② If no back clearance is possible, the nominal current per leg must be derated by 5 %.

Size T6 special design

Size	Thyristor power controller	h x w x d [mm]	weight [kg]
T6 special design	DCT880-W0b-1300-0dXS/T DCT880-W0b-1750-0dXS/T	1200 x 468 x 431	125
	DCT880 plus package	1470 x 625 x 780	155 ... 159

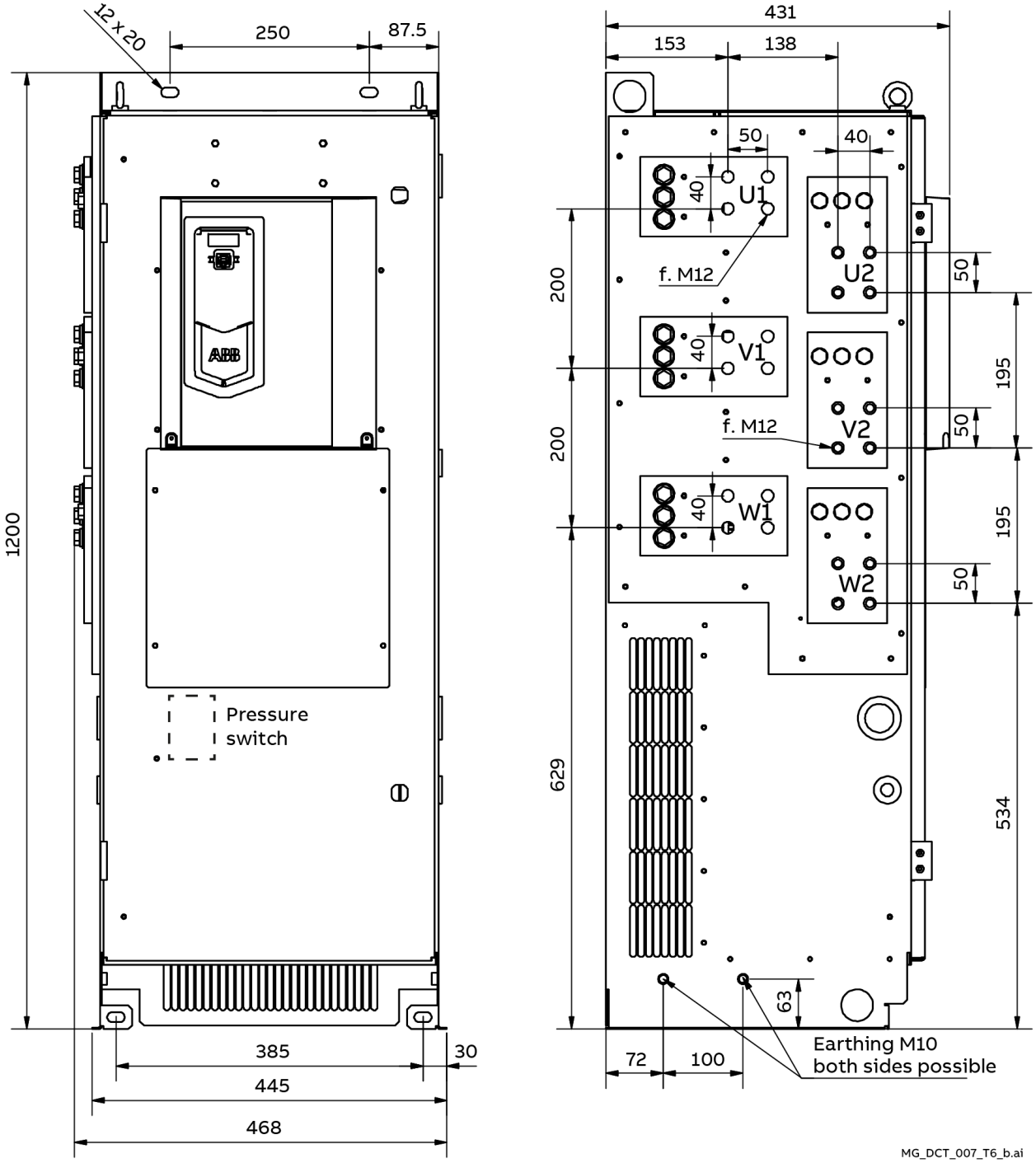

Size T6 standard

Size	Thyristor power controller	h x w x d [mm]	weight [kg]
T6 standard	DCT880-W0b-1300-0dX0 DCT880-W0b-1750-0dX0	1200 x 468 x 431	125
	DCT880 plus package	1470 x 625 x 780	155 ... 159

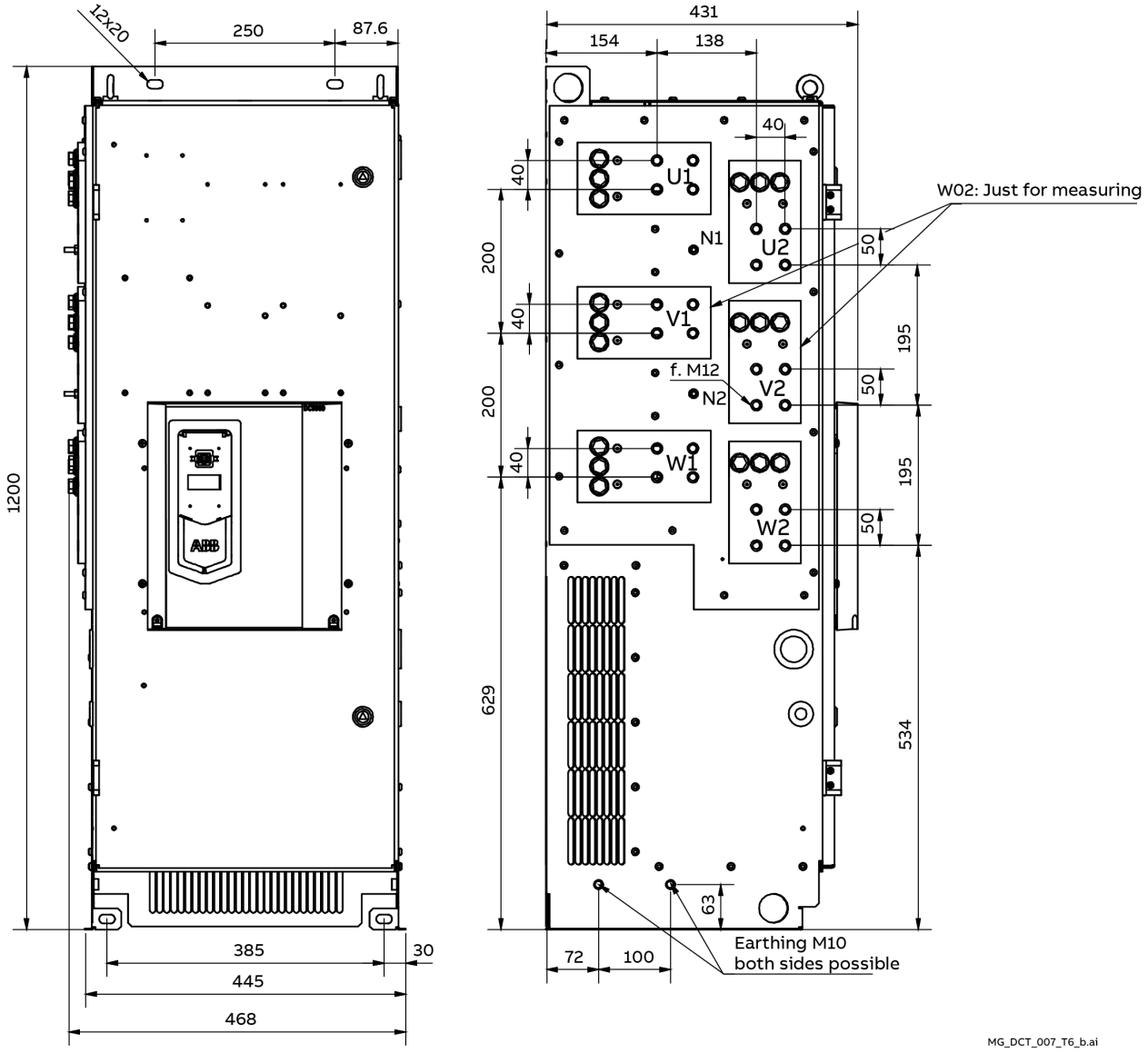

Size T8 right-hand (+P906)

Size	Thyristor power controller with external control unit (+P906)	h x w x d [mm]	weight [kg]
T8	DCT880-W03-2100-dd DCT880-W03-2700-dd DCT880-W03-3200-dd DCT880-W03-3900-dd DCT880-W03-4200-dd	1750 x 995 x 559	315
	DCT880 plus package	810 x 1980 x 1030	380 ... 440

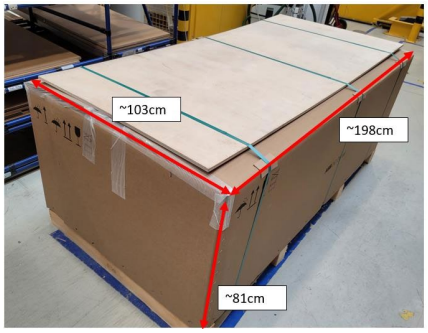

	Input and output busbars in mm:	100 x 10

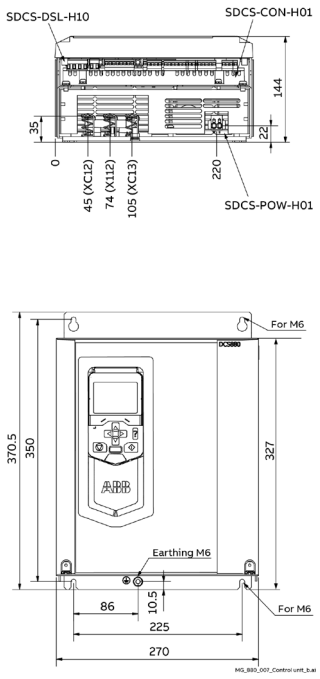

Control unit

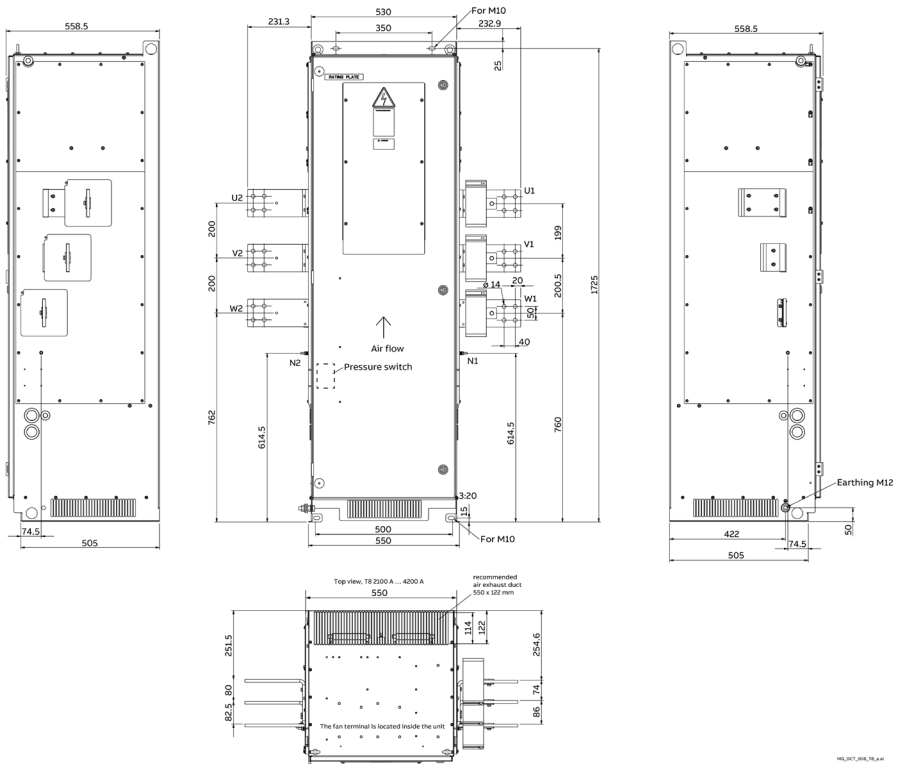

Power unit

Fan terminals and cooling air duct sizes

T1:

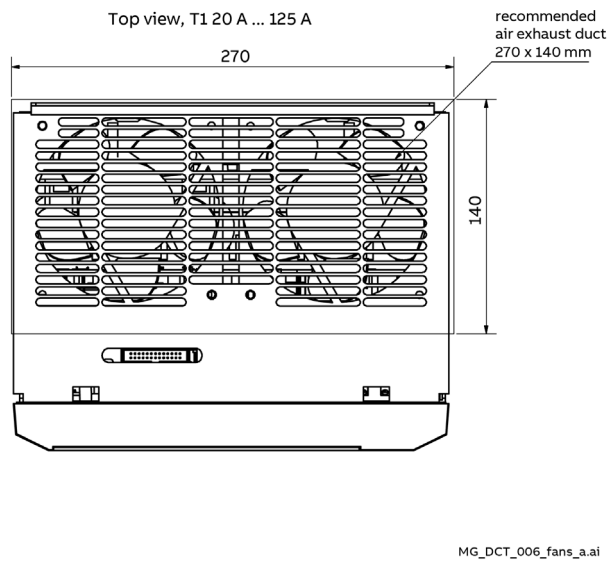

T2:

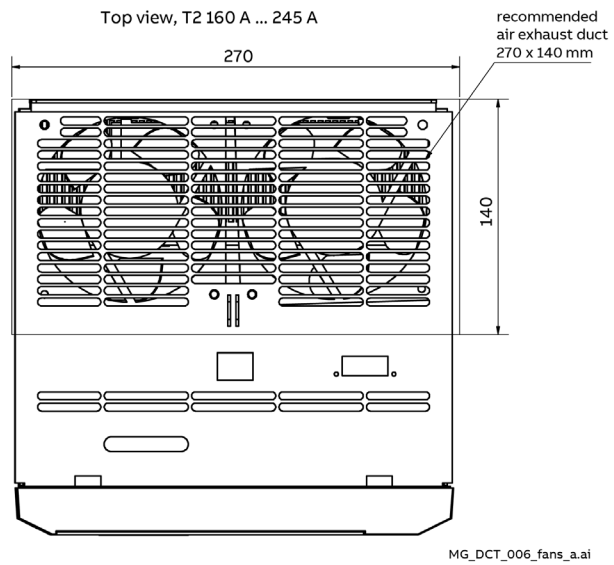

T3:

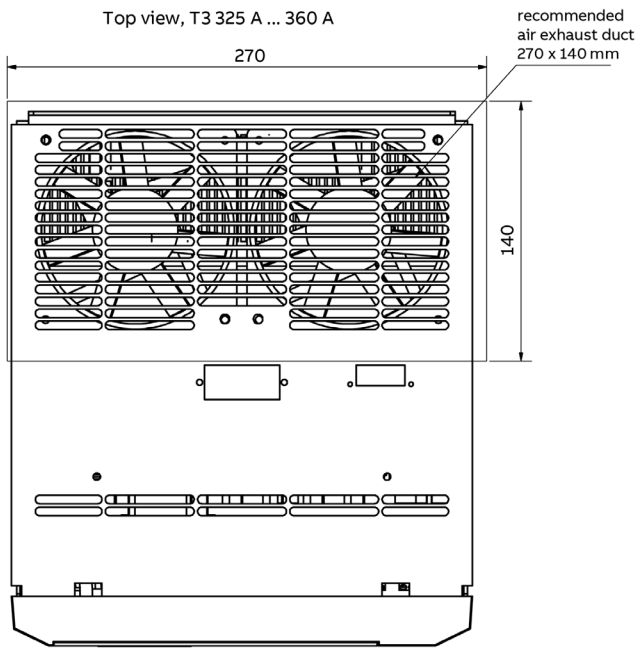

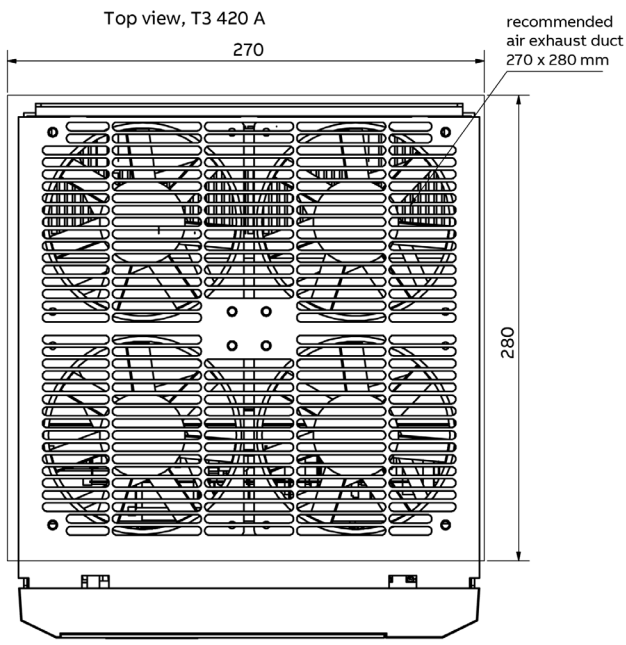

T4:

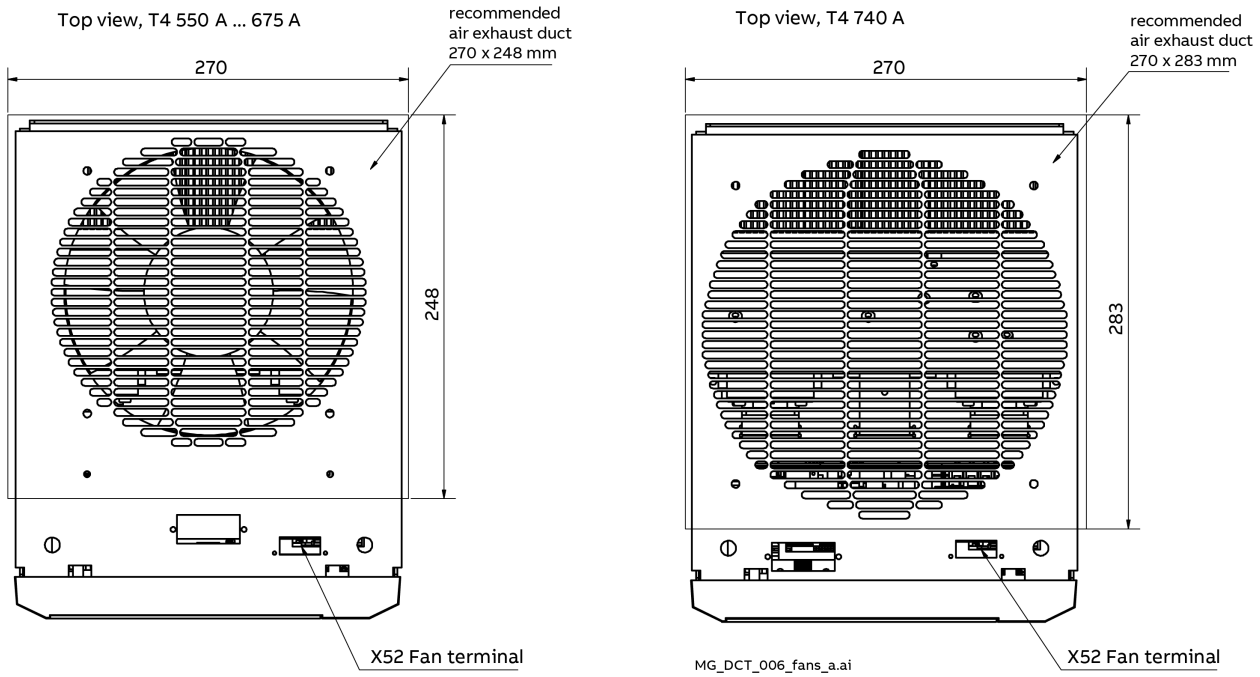
Top view, T4 550 A ... 675 A
recommended
air exhaust duct
270 x 248 mm
270
248
X52 Fan terminal
Top view, T4 740 A
recommended
air exhaust duct
270 x 283 mm
270
283
X52 Fan terminal
MG_DCT_006_fans_a.ai

T5:

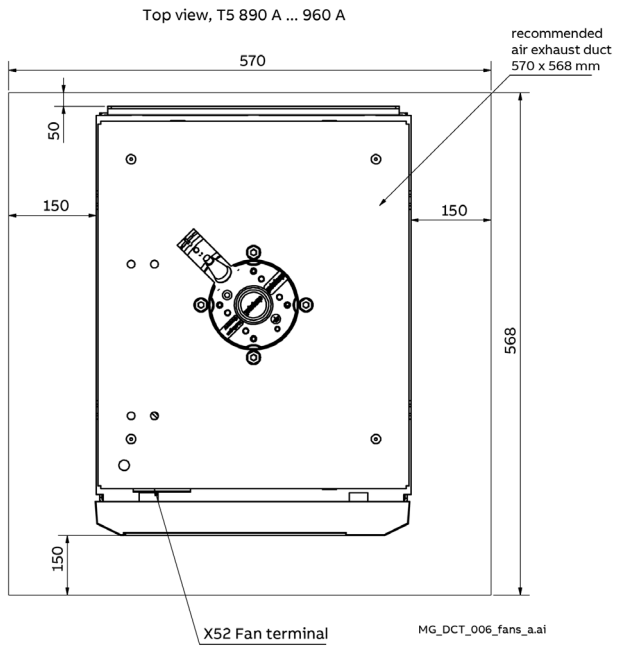
Top view, T5 890 A ... 960 A
recommended
air exhaust duct
570 x 568 mm
570
50
150
150
568
150
X52 Fan terminal
MG_DCT_006_fans_a.ai

T6:

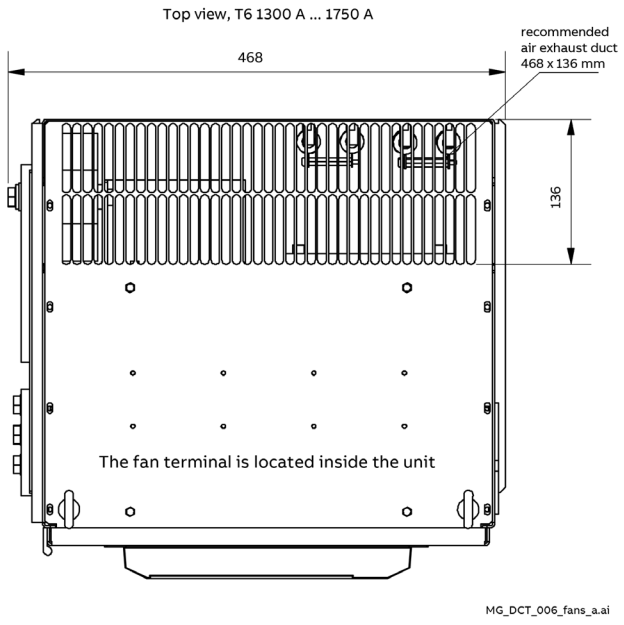
Top view, T6 1300 A ... 1750 A
recommended
air exhaust duct
468 x 136 mm
468
136
The fan terminal is located inside the unit
MG_DCT_006_fans_a.ai

T8:

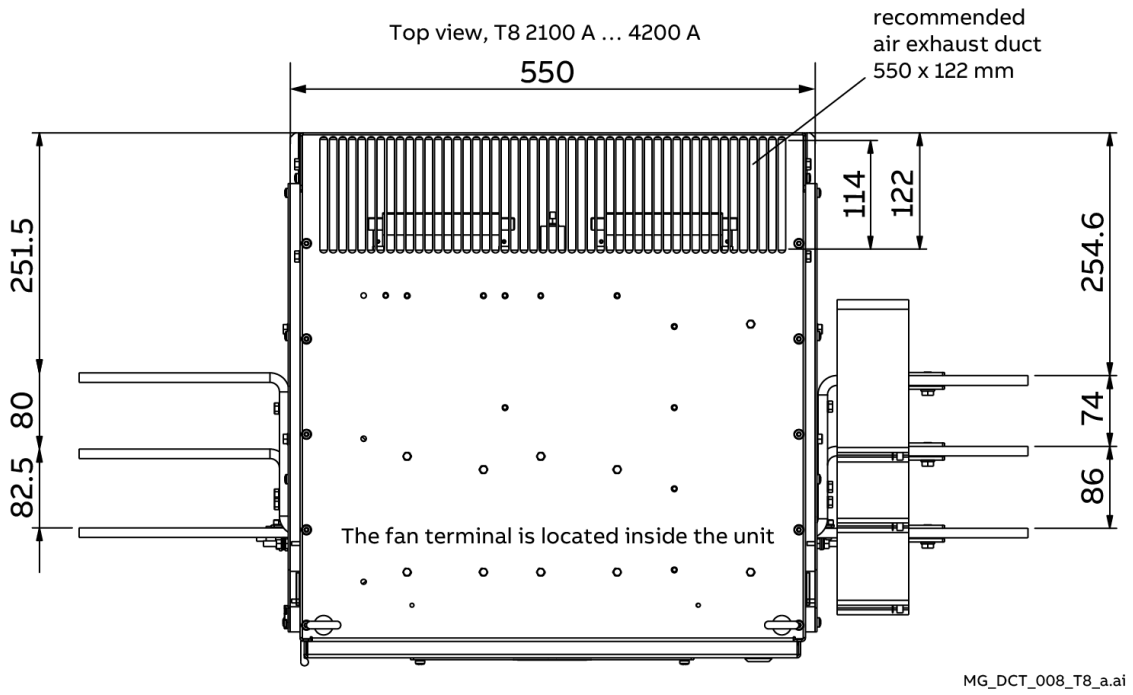
Top view, T8 2100 A … 4200 A
550
recommended
air exhaust duct
550 x 122 mm
114
122
251.5
80
82.5
254.6
74
86
The fan terminal is located inside the unit
MG_DCT_008_T8_a.ai

Wiring

This chapter contains the instructions that must be followed when selecting cables, protections, cable routing and way of operation of the thyristor power controller. Always follow local regulations. This chapter applies to all DCT880 thyristor power controllers.

Note: A mains contactor (K1) controlled by the DCT880 is strongly recommended by ABB, but not mandatory.

Attention: If the recommendations given by ABB are not followed, the thyristor power controller may experience problems that the warranty does not cover.

Connection and wiring example for thyristor power controllers T1 … T5:

Basic connection diagram T1 …T3, 3-phase mains, W03 (3 legs):	Basic connection diagram T4 and T5, 3-phase mains, W03 (3 legs):
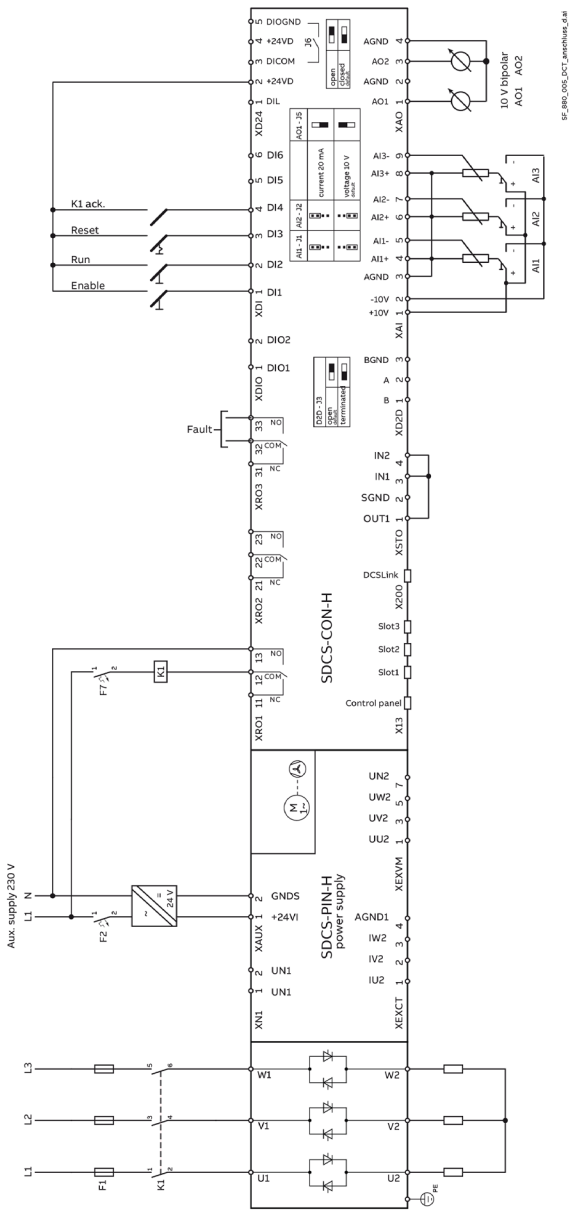	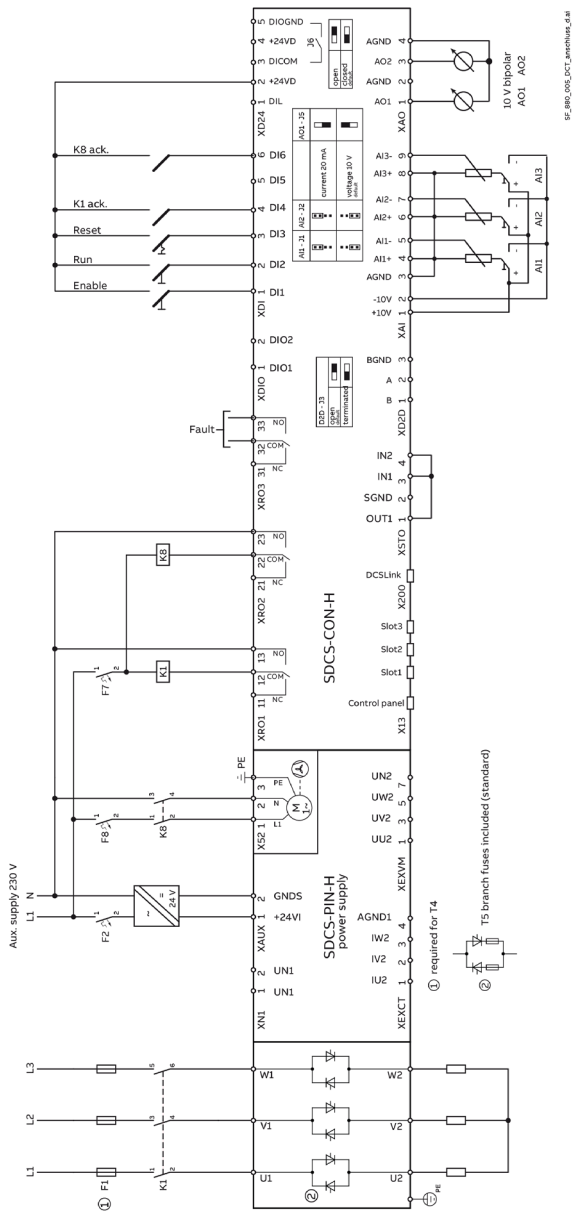

Basic connection diagram T1 …T3, 3-phase mains, W02 (2 legs):	Basic connection diagram T4 and T5, 3-phase mains, W02 (2 legs):
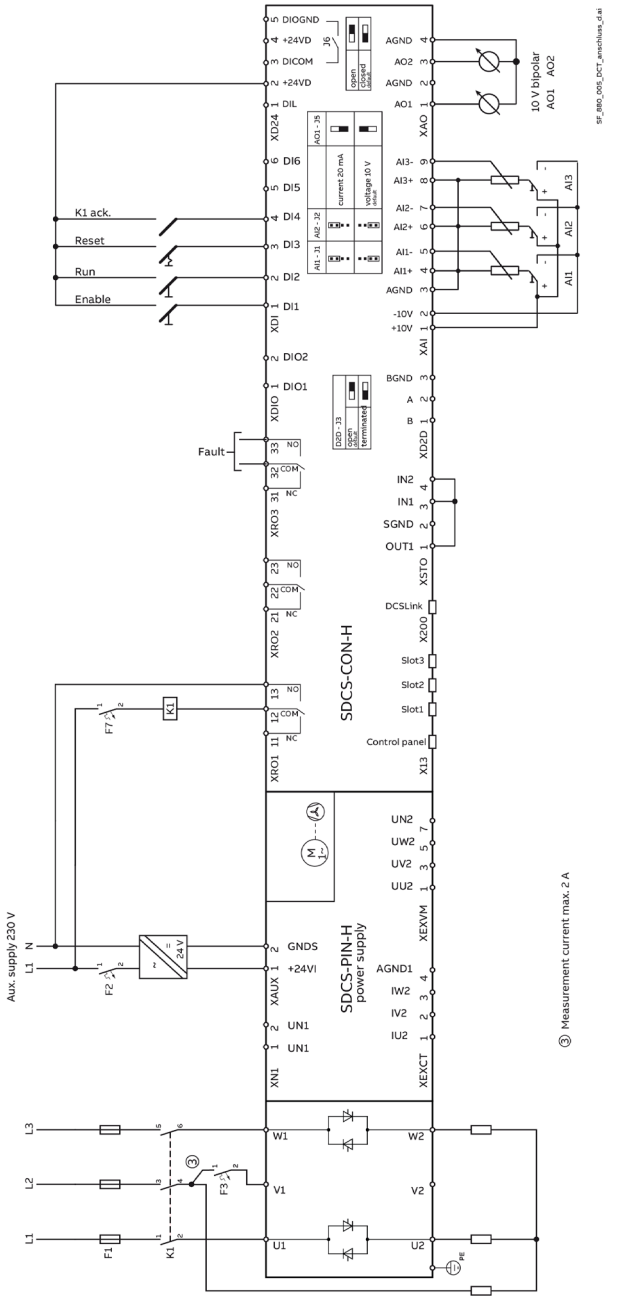	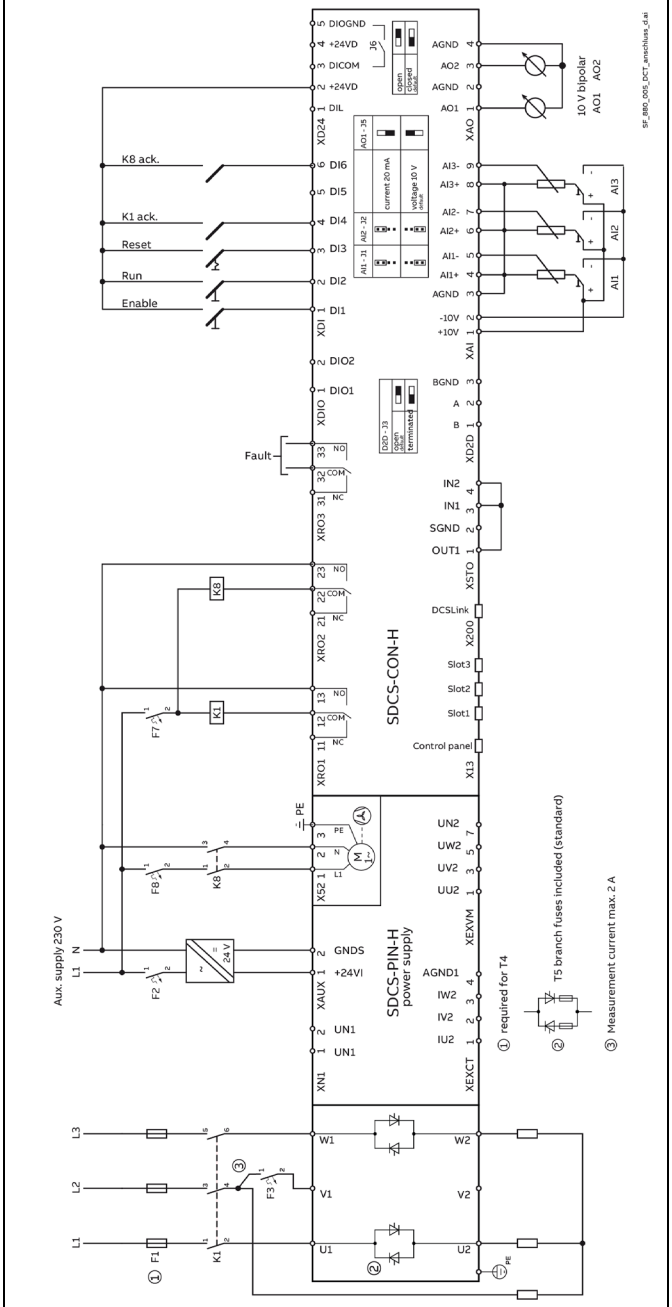

Basic connection diagram T1 …T3, phase-to-phase mains, W03 (3 legs):	Basic connection diagram T4 and T5, phase-to-phase mains, W03 (3 legs):
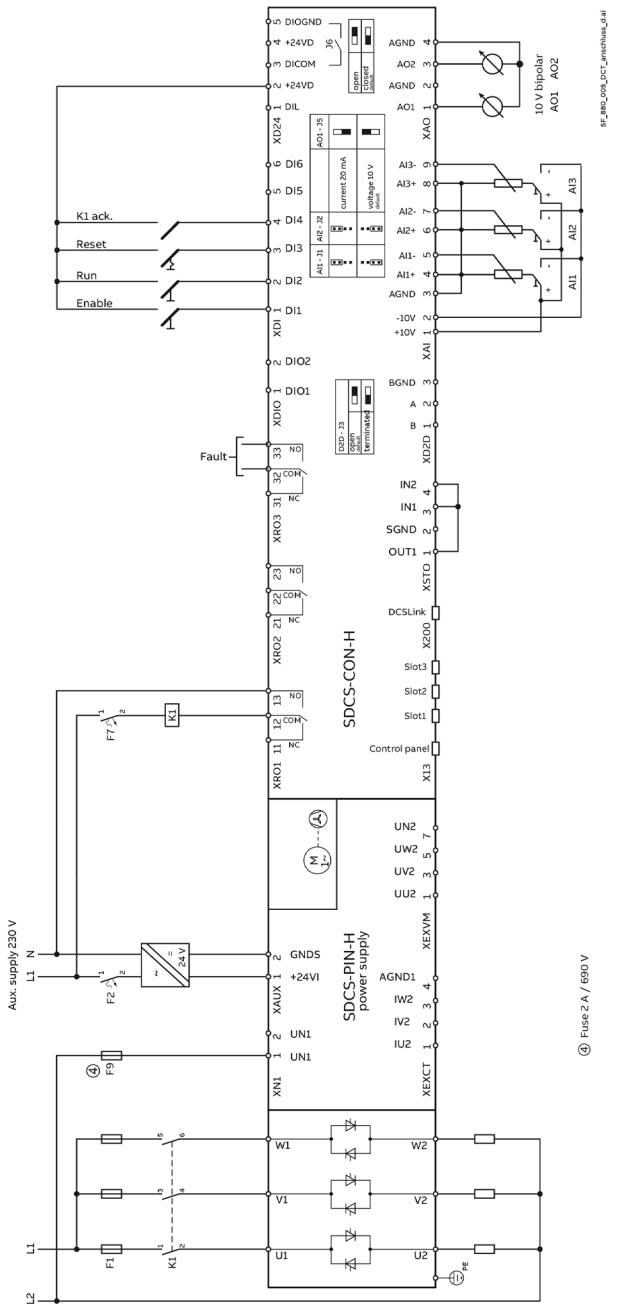	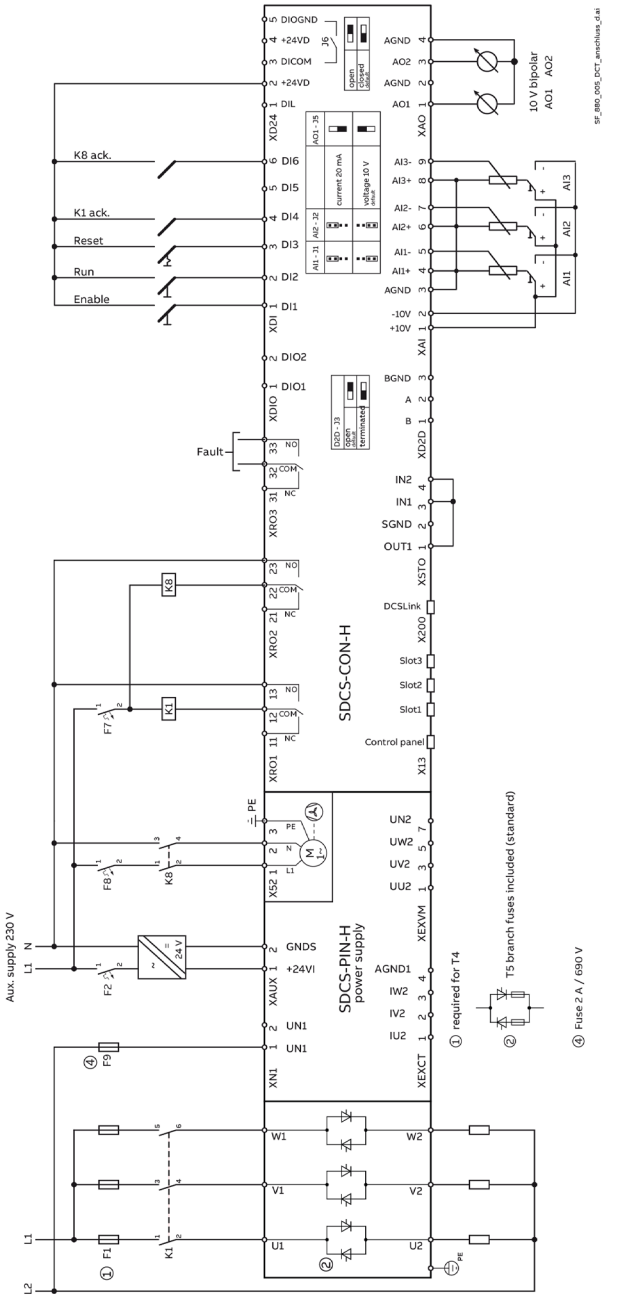

Basic connection diagram T1 …T3, phase-to-phase mains, W02 (2 legs):	Basic connection diagram T4 and T5, phase-to-phase mains, W02 (2 legs):
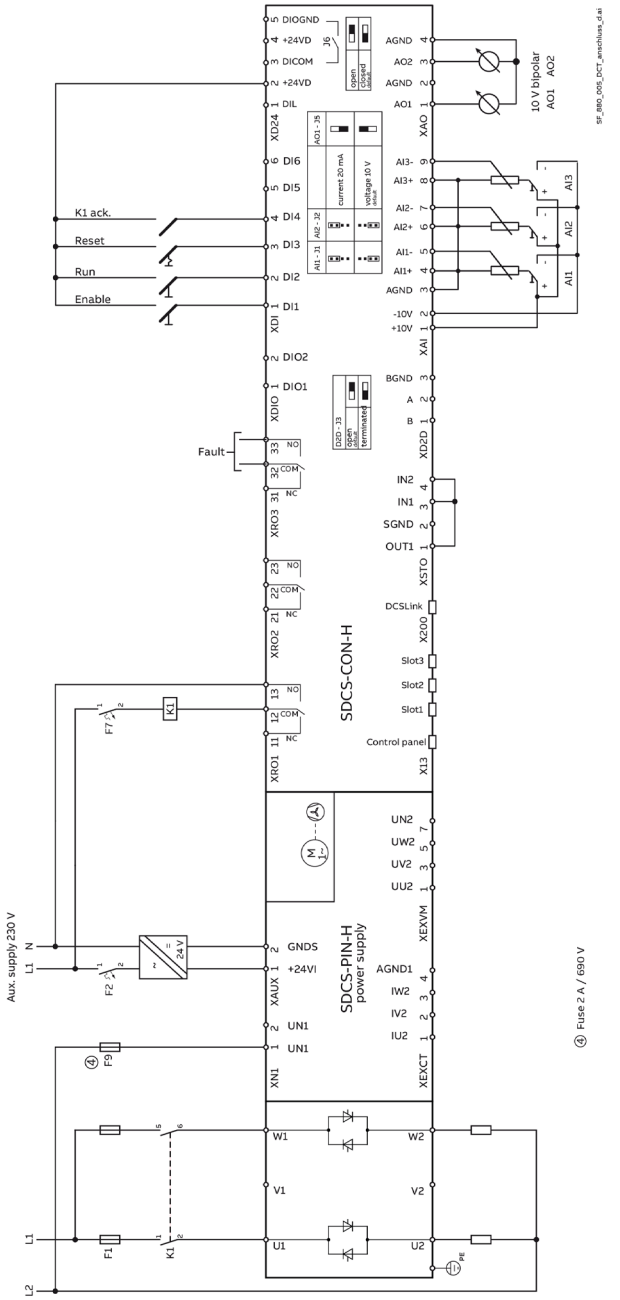	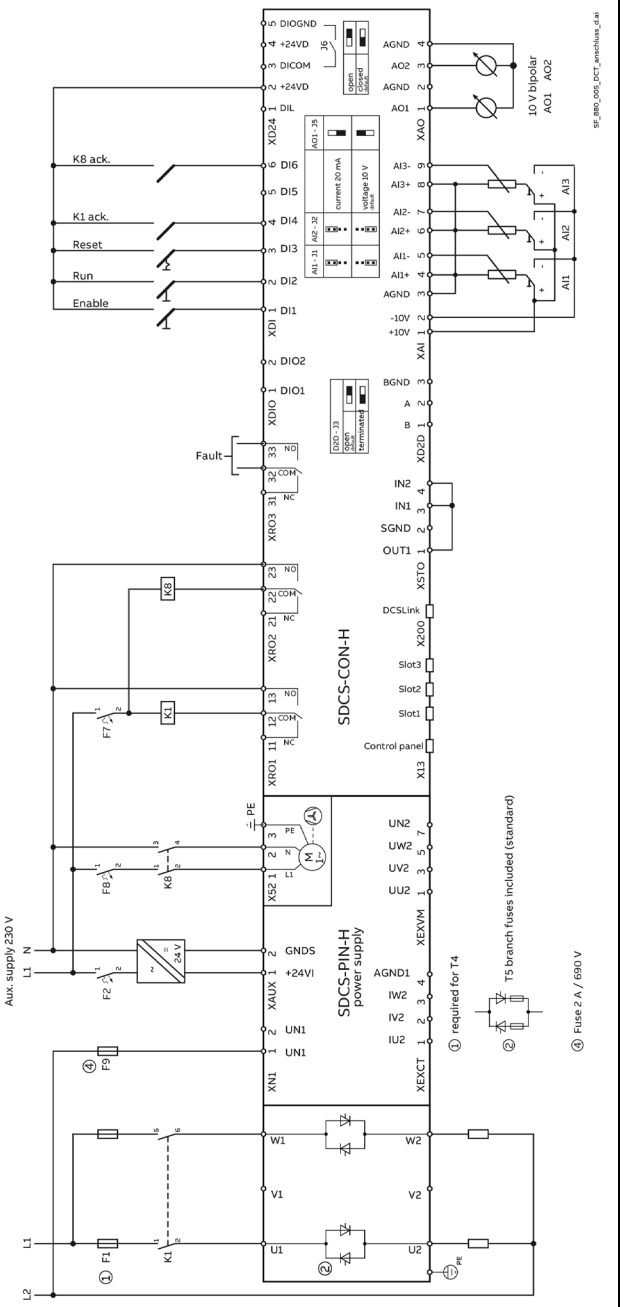

Basic connection diagram T1 …T3, single-phase mains, W03 (3 legs):	Basic connection diagram T4 and T5, single-phase mains, W03 (3 legs):
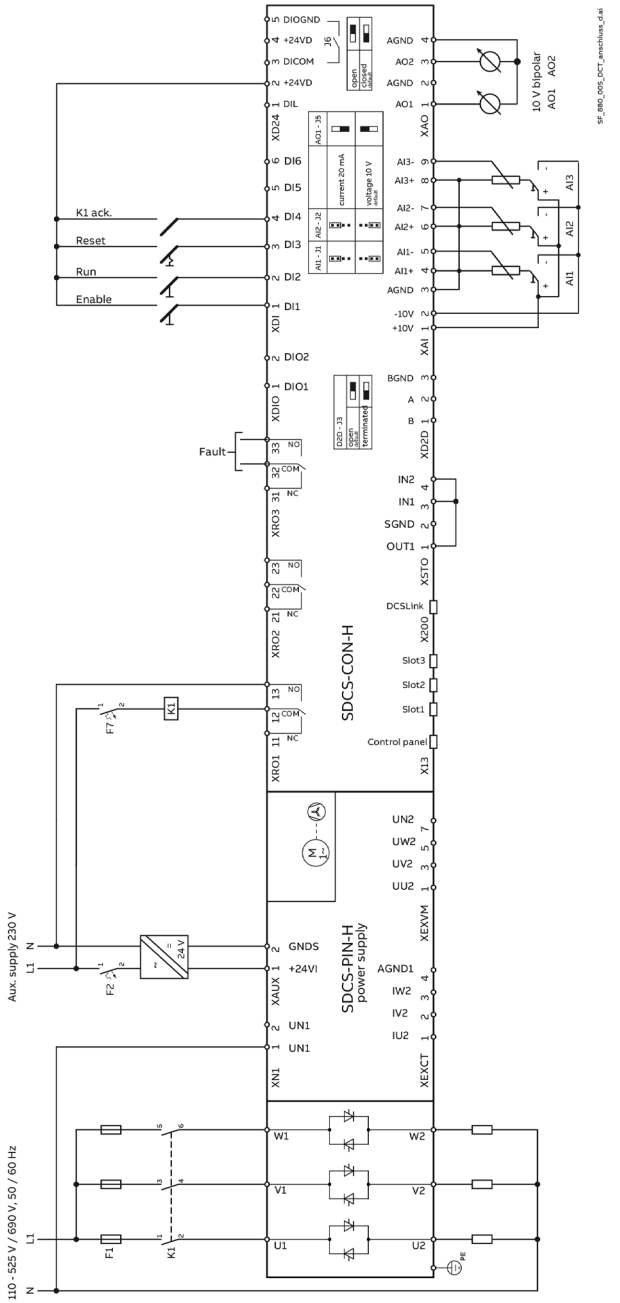	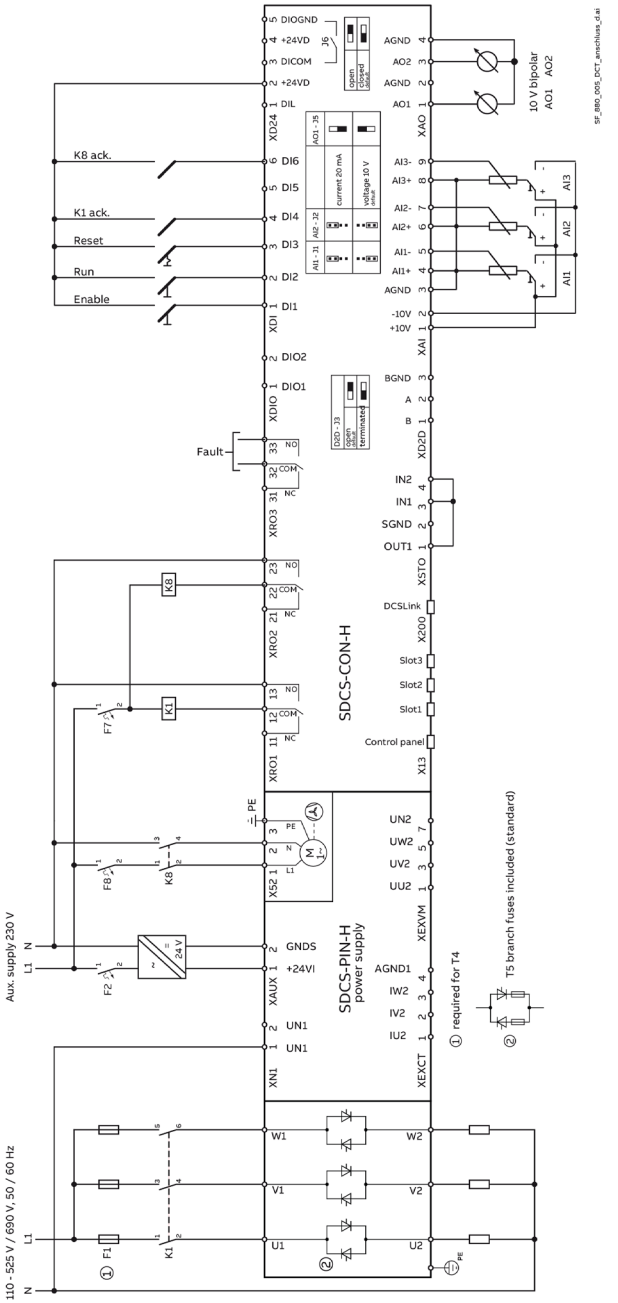

Basic connection diagram T1 …T3, single-phase mains, W02 (2 legs):	Basic connection diagram T4 and T5, single-phase mains, W02 (2 legs):
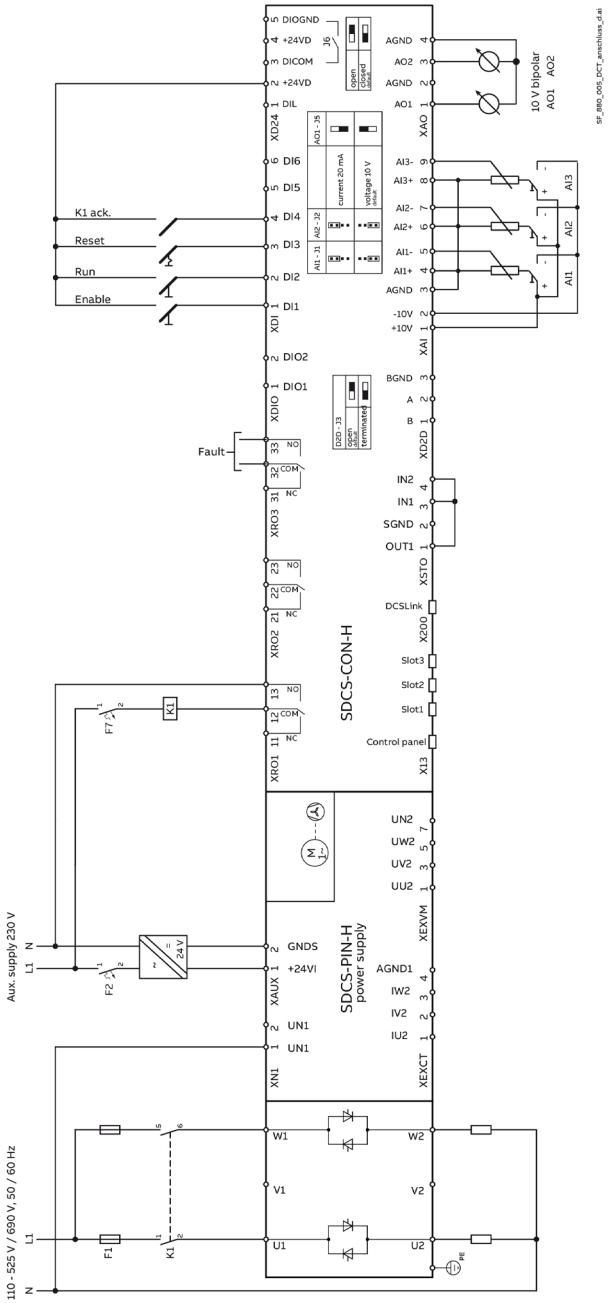	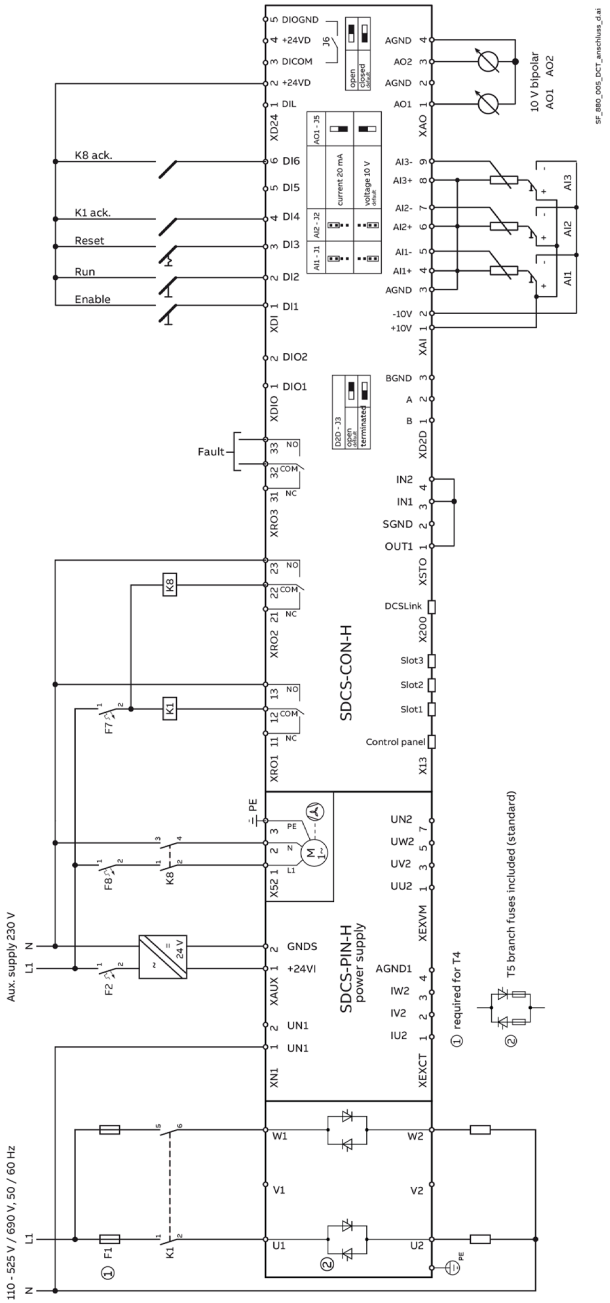

Basic connection diagram T6 special design 1300 A, 3-phase mains, W02 (2 legs):	Basic connection diagram T6 special design 1300 A, 3-phase mains, W03 (3 legs):
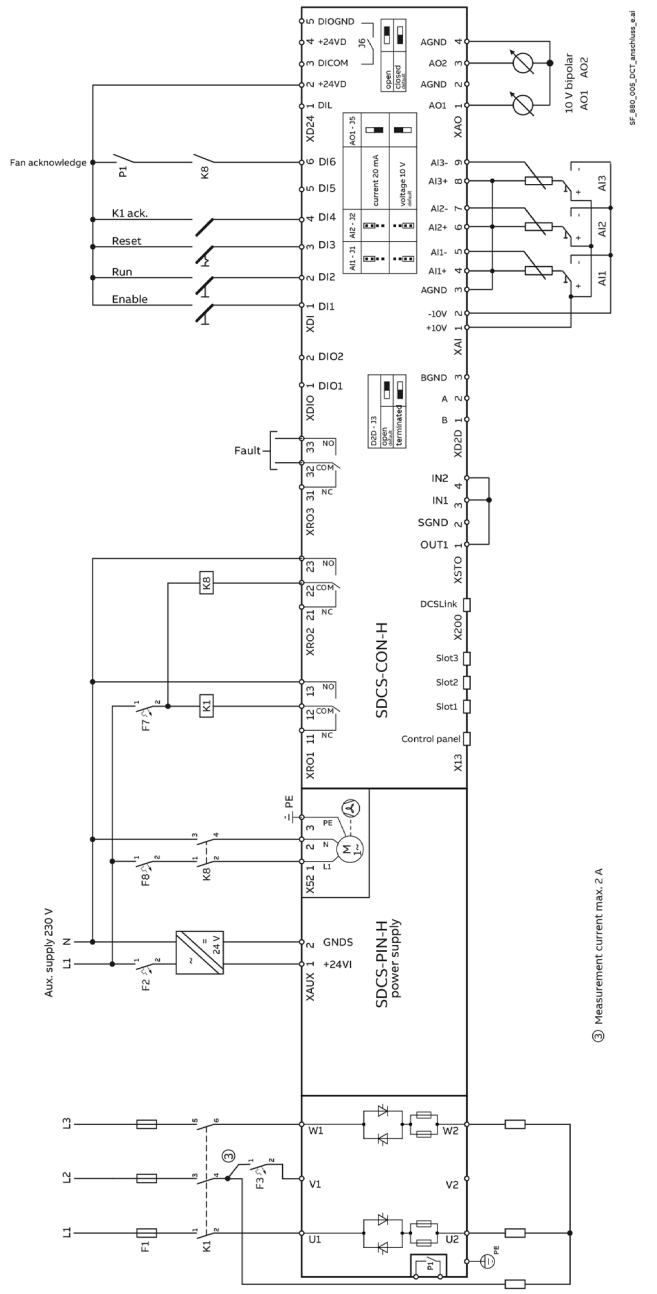	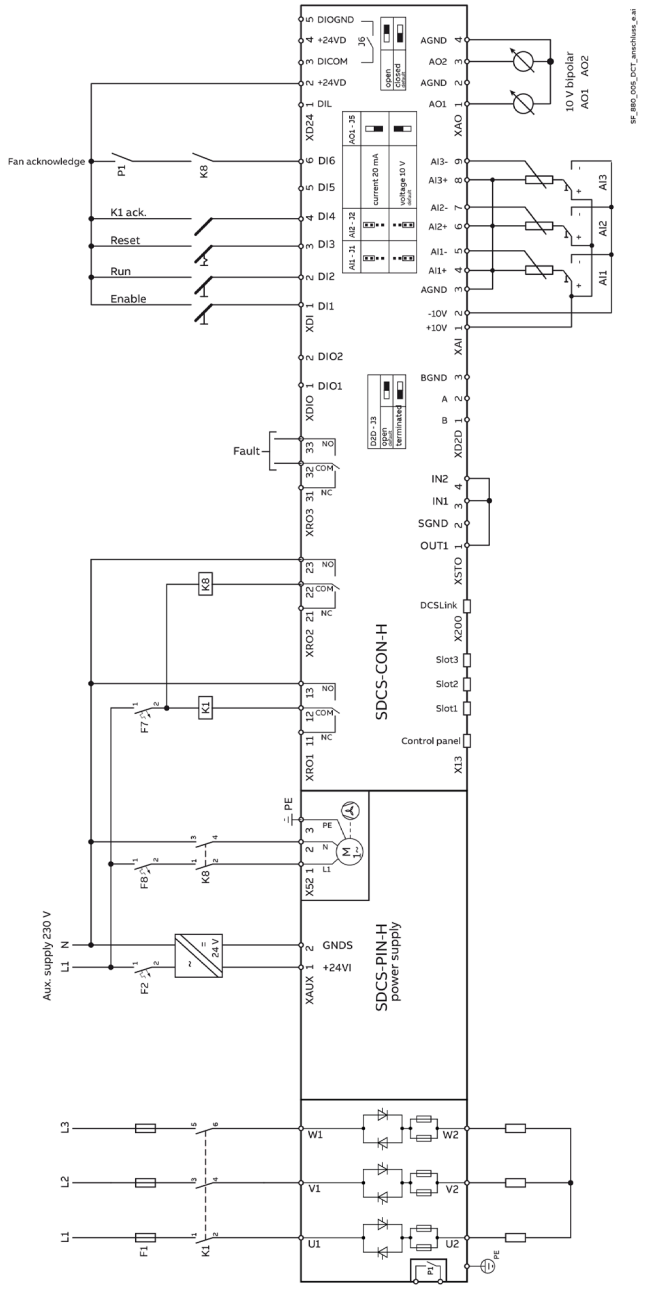

Basic connection diagram T6 special design 1750 A, 3-phase mains, W02 (2 legs):	Basic connection diagram T6 special design 1750 A, 3-phase mains, W03 (3 legs):
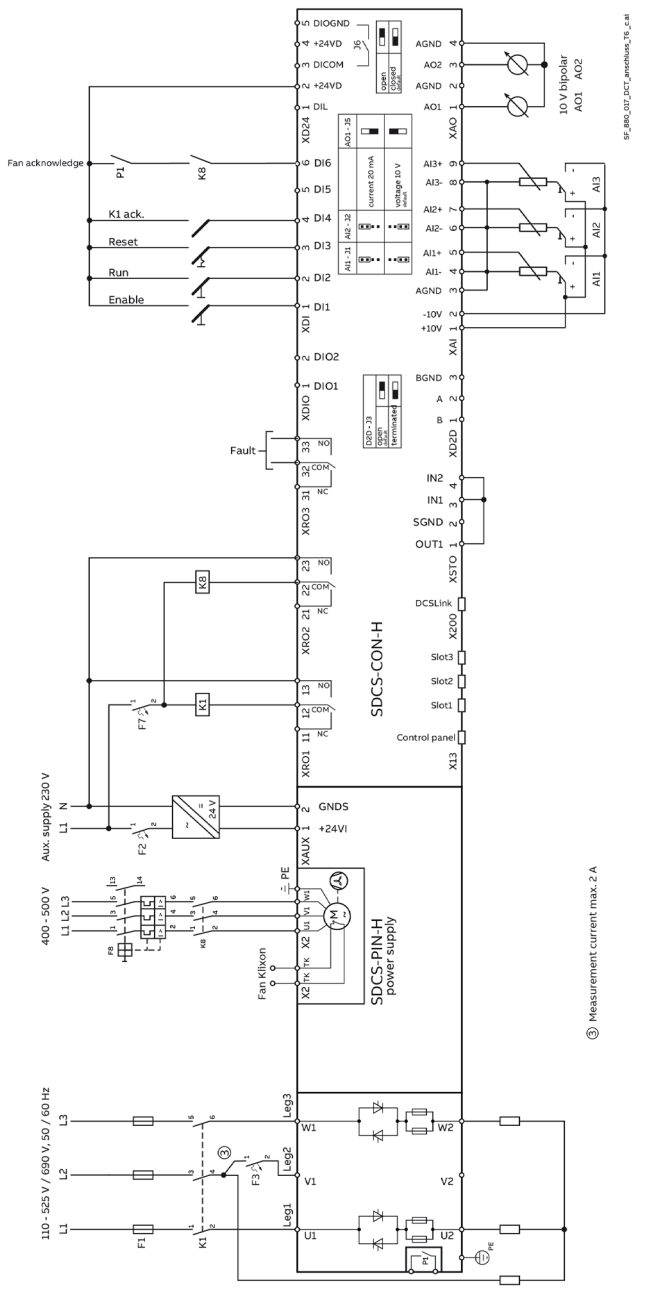	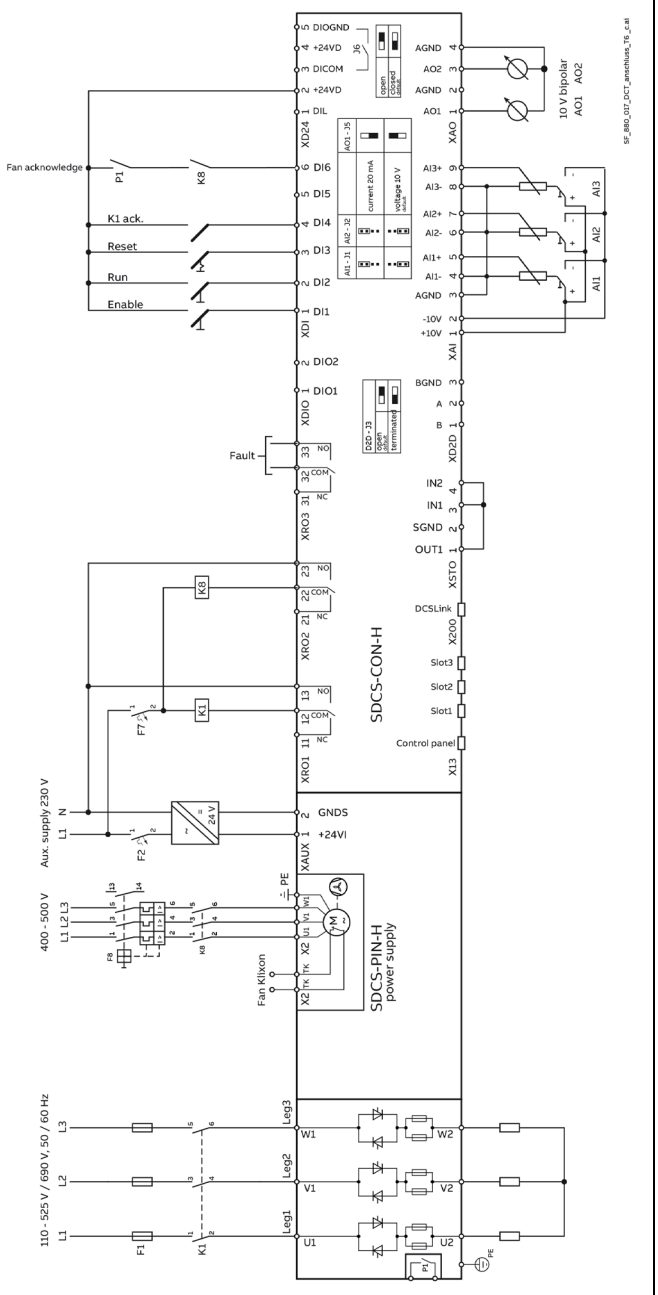

Pressure switch (P1) connection

Connect the pressure switch (P1) as shown in the figures above.

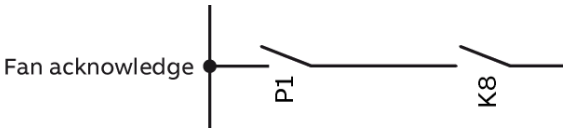

Set 19.38 Controller fan acknowledge source accordingly.

Basic connection diagram T6 standard 1300 A, 3-phase mains, W02 (2 legs):	Basic connection diagram T6 standard 1300 A, 3-phase mains, W03 (3 legs):
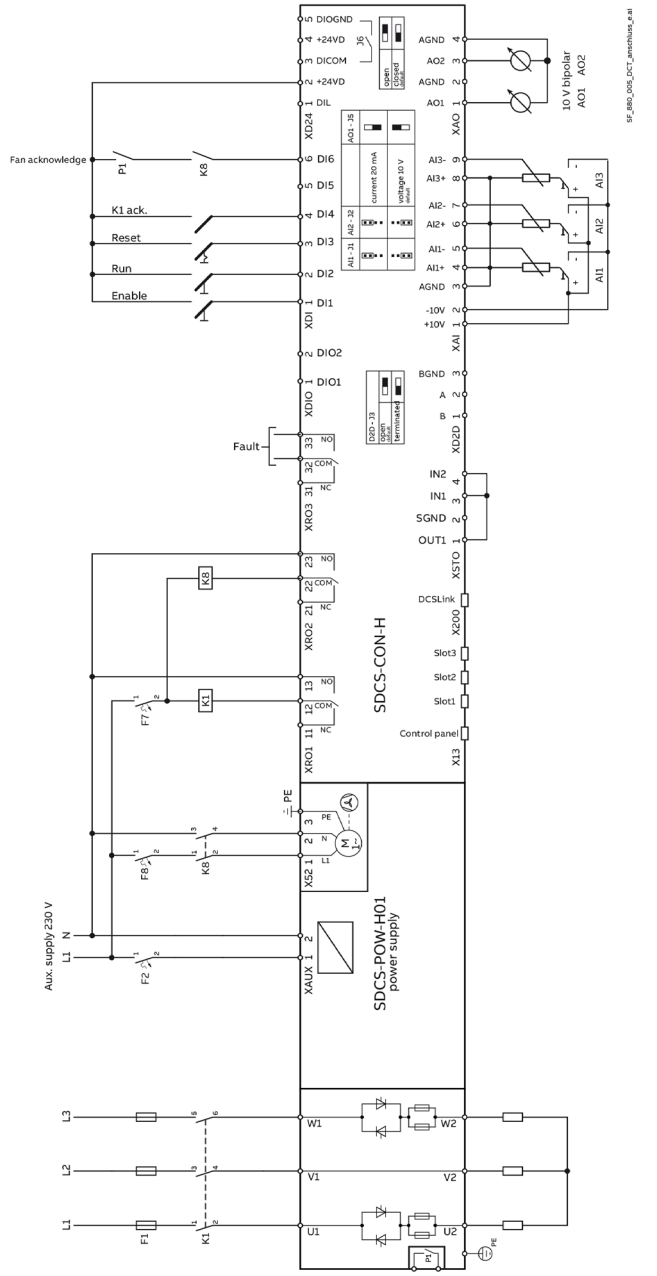	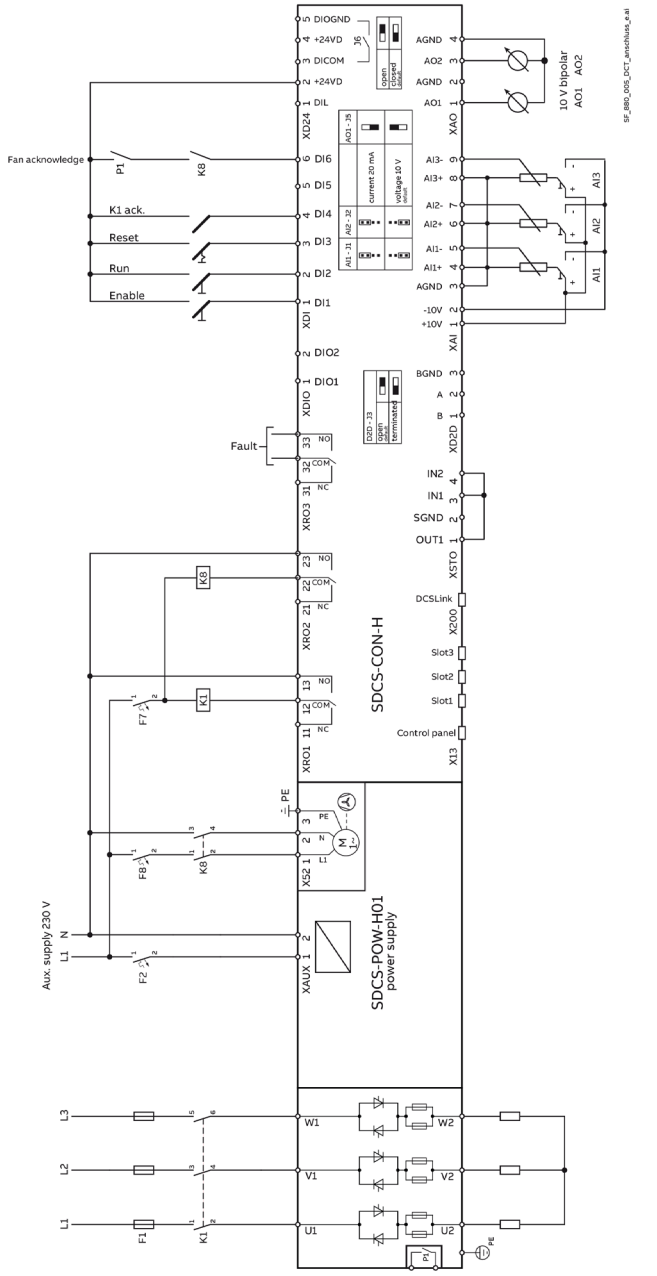

Basic connection diagram T6 standard 1750 A, 3-phase mains, W02 (2 legs):	Basic connection diagram T6 standard 1750 A, 3-phase mains, W03 (3 legs):
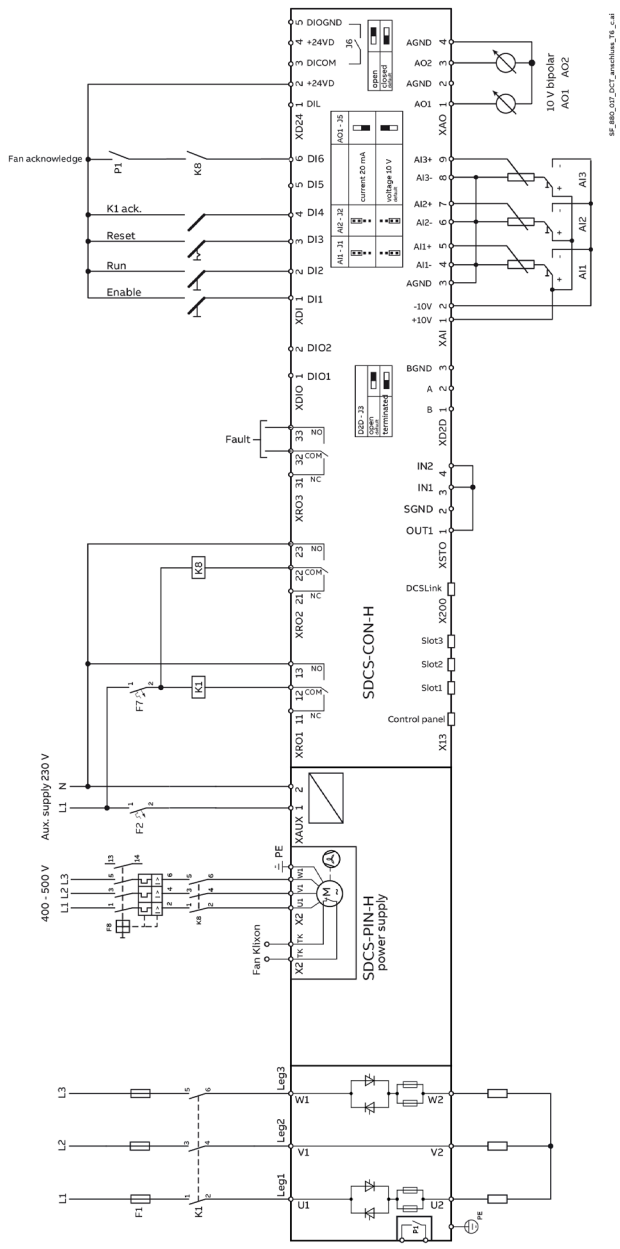	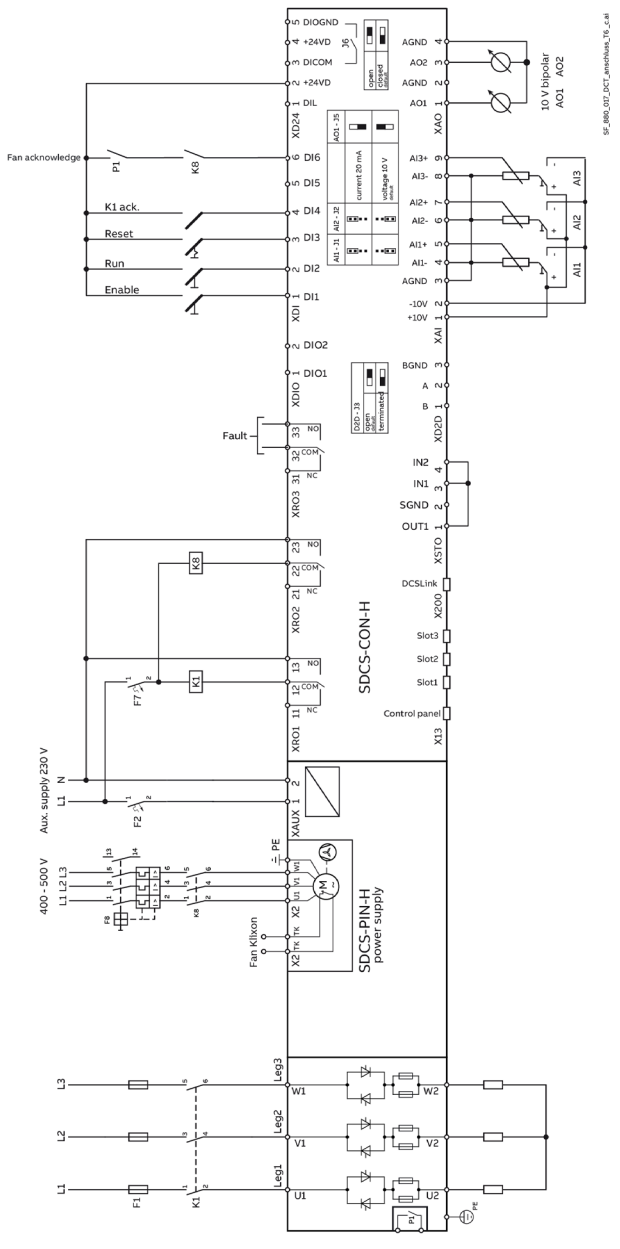

Pressure switch (P1) connection

Connect the pressure switch (P1) as shown in the figures above.

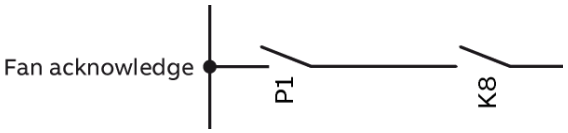

Set 19.38 Controller fan acknowledge source accordingly.

	Basic connection diagram T8, 3-phase mains, W03 (3 legs):
	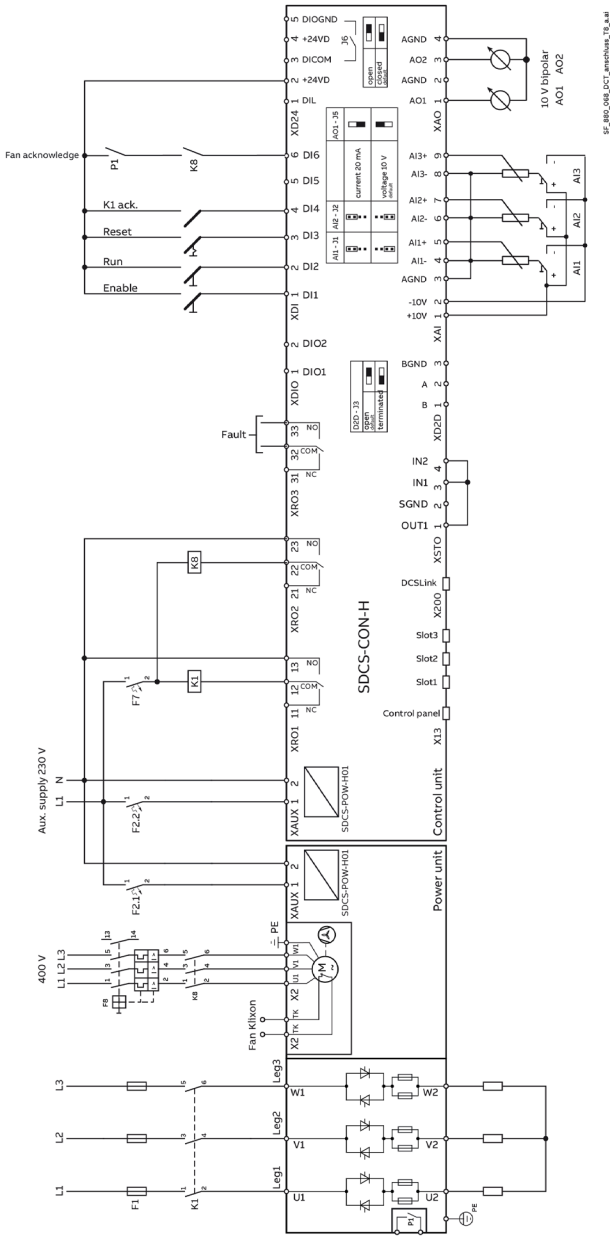

Pressure switch (P1) connection

Connect the pressure switch (P1) as shown in the figures above.

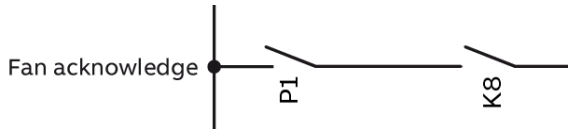

Set 19.38 Controller fan acknowledge source accordingly.

Removal and attachment of the front cover

To remove the DCT880 front cover depress the locks at the bottom ① and lift the front cover up ②. There is no need to remove the control panel.

To attach the DCT880 front cover hang it on the top notches and click in the locks at the bottom. There is no need to remove the control panel.

Cabling

Power cables
Dimension the power cables according to local regulations. The cables must:
- Be able to carry the DCT880 load current.
- Be rated for at least 60°C.
- Fulfill short-circuit protection.
- Be rated according permissible touch voltage appearing under fault conditions (so that the fault point voltage will not rise too high when an earth fault occurs).
- Be screened according to safety regulations.

Power cable short-circuit protection
Always protect the mains cables with fuses. Size the fuses according to local safety regulations, to appropriate input voltage and to the rated current of the thyristor power controller, see Environmental conditions.
High-speed semiconductor fuses provide short-circuit protection, but do not provide thermal overload protection and therefore no conductor protection.

Control/Signal cables
All control cables must be shielded.
Used screened cables for digital signals, which are longer than 3 m and for all analog signals.
Connect each screen at both ends by metal clamps or comparable means directly on clean metal surfaces, if both earthing points belong to the same earth line. Otherwise, connect a capacitor to earth on one end. In the thyristor power controller cabinet this kind of connection must be made directly on the sheet metal close to the terminals and if the cable comes from outside also on the PE bar. At the other end of the cable, connect the screen well with the housing of the signal emitter or receiver.

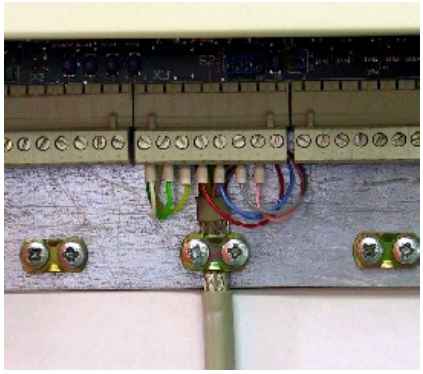

Connection of cable screens with metal clamps to the metal surface of the electronic tray.

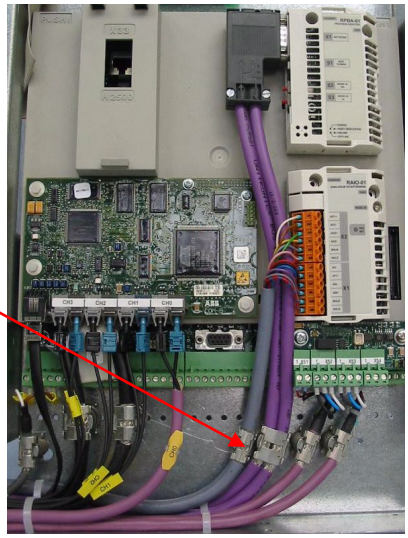

A double-shielded twisted pair cable (figure A below), e.g., JAMAK by NK Cables, Finland, must be used for analog signals and the pulsed signals. Employ one individually shielded pair for each signal. Do not use common return for different analog signals.
A double-shielded cable (figure A below) is the best alternative for low-voltage digital signals, but a single-shielded twisted multi pair cable (figure B below) is also usable.

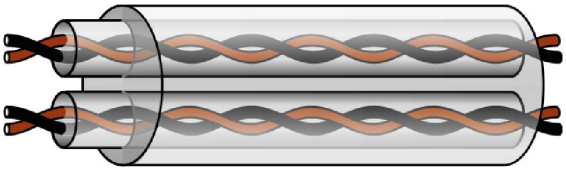

A: Double-shielded twisted pair cable

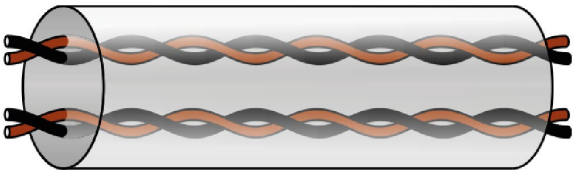

B: Single-shielded twisted multi pair cable

Pairs should be twisted as close to terminals as possible.

Signals in separate cables

Run analog and digital signals in separate, shielded cables. Never mix 24 V_{DC} and 115/230 V_{AC} signals in the same cable.

Signals allowed to be run in the same cable

Relay-controlled signals, providing their voltage does not exceed 48 V, can be run in the same cables as digital input signals. The relay-controlled signals should be run as twisted pairs too.

Relay cable type

The cable type with braided metallic screen (e.g., ÖLFLEX by LAPPKABEL, Germany) has been evaluated and approved by ABB.

Control panel cable length and type

In remote use, the cable connecting the control panel to the DCT880 thyristor power controller must not exceed 3 meters. Cable type: Shielded CAT 5e or better Ethernet patch cable with RJ-45 ends.

Fieldbus cables

Fieldbus cables can be quite different, depending on the fieldbus type. Please refer to control/signal cables.

Routing the cables

Run the power cables away from other cables. Power cables of several thyristor power controllers can be run in parallel next to each other. Power cables and control cables should be installed on separate trays. Avoid long parallel runs of power cables with other cables to decrease electromagnetic interference caused by rapid changes in the thyristor power controller's output voltage.

Where control cables must cross power cables, make sure they are arranged at an angle as close to 90 degrees as possible. Do not run spare cables through the cabinet.

The cable trays must have good electrical bonding to each other and to the grounding electrodes. Aluminum tray systems can be used to improve local equalizing of potential.

The following diagrams show the proper routing of cables:

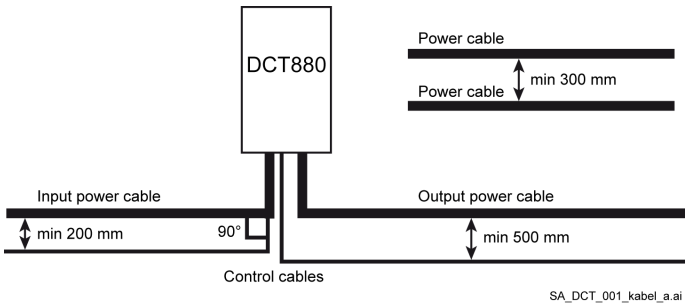

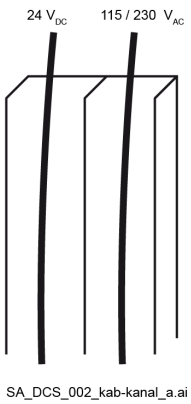

Route 24 V_{DC} and 115/230 V_{AC} control cables in separate ducts inside the cabinet.

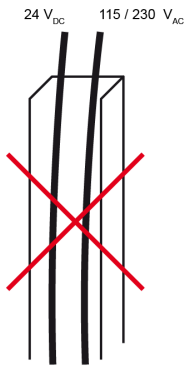

Not allowed unless the 24 V_{DC} cable is insulated for 115/230 V_{AC} or insulated with an insulation sleeve for 115/230 V_{AC}.

Power terminals

Cross-sectional areas - Tightening torques

Recommended cross-sectional area according to **DINVDE 0276-1000** and **DINVDE 0100-540 (PE)** in a trefoil arrangement, placed in a cable tray, following the explanation in chapter Routing the cables, and up to 50°C ambient temperature. The necessary wire torque at 60°C wire temperature is the same as recommended in the table below.

Power cables

U1, V1, W1 are the input power terminals. U2, V2, W2 are the output power terminals. PE is the terminal for protective earth.
As mentioned above the values in the table below are **recommended**. For all other conditions, the cables must be sized according to the local safety regulations, the appropriate input voltages, and the load current of the thyristor power controller.

Size	Thyristor power controller	U1, V1, W1 or U2, V2, W2				PE	
		I [A~] per leg	① [mm²]	② [mm²]		[mm²]	
T1	DCT880-W0b-0020-0d	20	1 x 4	-	3 x (1 x M6)	1x 4	1x M6
	DCT880-W0b-0035-0d	35	1 x 6	-	3 x (1 x M6)	1x 6	1x M6
	DCT880-W0b-0055-0d	55	1 x 25	-	3 x (1 x M6)	1x 16	1x M6
	DCT880-W0b-0080-0d	80	1 x 25	-	3 x (1 x M6)	1x 16	1x M6
	DCT880-W0b-0100-0d	100	1 x 35	-	3 x (1 x M6)	1x 16	1x M6
	DCT880-W0b-0125-0d	125	2 x 25	1 x 70	3 x (1 x M6)	1x 25	1x M6
T2	DCT880-W0b-0160-0d	160	2 x 25	1 x 70	3 x (1 x M10)	1x 25	1 x M8
	DCT880-W0b-0200-0d	200	2 x 25	1 x 95	3 x (1 x M10)	1x 25	1 x M8
	DCT880-W0b-0245-0d	245	2 x 50	-	3 x (1 x M10)	1x 50	1 x M8
T3	DCT880-W0b-0325-0d	325	2 x 95	-	3 x (1 x M10)	1x 50	1 x M10
	DCT880-W0b-0360-0d	360	2 x 95	-	3 x (1 x M10)	1x 50	1 x M10
	DCT880-W0b-0420-0d	420	2 x 95	-	3 x (1 x M10)	1x 50	1 x M10
T4	DCT880-W0b-0550-0d	550	2 x 120	-	3 x (1 x M12)	1x120	1 x M12
	DCT880-W0b-0630-07	630	2 x 120	-	3 x (1 x M12)	1x120	1 x M12
	DCT880-W0b-0675-0d	675	2 x 150	-	3 x (1 x M12)	1x150	1 x M12
	DCT880-W0b-0740-0d	740	2 x 150	-	3 x (1 x M12)	1x150	1 x M12
T5	DCT880-W03-0890-0d	890	4 x 95	3 x 120	3 x (2 x M10)	1x185	1 x M12
	DCT880-W02-0960-0d	960	4 x 95	3 x 120	3 x (2 x M10)	1x185	1 x M12
T6 special design	DCT880-W0b-1300-0dXS/T	1300	4 x 185	3 x 240	3 x (4 x M12)	2 x 185	2 x (1 x M10)
	DCT880-W0b-1750-0dXS/T	1750	4 x 240	-	3 x (4 x M12)	2 x 240	2 x (1 x M10)
T6 standard	DCT880-W0b-1300-0dX0	1300	4 x 185	3 x 240	3 x (4 x M12)	2 x 185	2 x (1 x M10)
	DCT880-W0b-1750-0dX0	1750	4 x 240	-	3 x (4 x M12)	2 x 240	2 x (1 x M10)
T8	DCT880-W03-2100-dd	2100	8 x 120	6 x 185	3 x(4 x M12)	4 x 120	1 x M12
	DCT880-W03-2700-dd	2700	7 x 185	-	3 x(4 x M12)	4 x 185	1 x M12
	DCT880-W03-3200-dd	3200	8 x 240	-	3 x(4 x M12)	4 x 240	1 x M12
	DCT880-W03-3900-0d	3900	6 x 300	-	3 x(4 x M12)	3 x 300	1 x M12
	DCT880-W03-4200-0d	4200	6 x 300	-	3 x(4 x M12)	3 x 300	1 x M12

① Recommended cross-sectional area for a cable with a single core conductor.
② Recommended alternative cross-sectional area for a cable with a single core conductor.

Tightening torque	M6	M8	M10	M12
	6 Nm	13 Nm	25 Nm	50 Nm

You will find instructions on how to calculate the PE conductor's cross-sectional area in IEC 60364-4-xx or in equivalent national standards. We would remind you that thyristor power controller might have a current-limiting effect.

WARNING
If neutral is connected to the star point of the load, the cable has to be able to carry up to 1.73 ($\sqrt{3}$) times nominal load current.

Power terminal location and layout

T1:

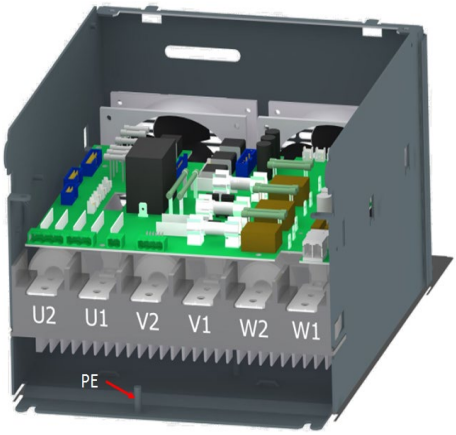

T2:

T3:

T4:

T5:

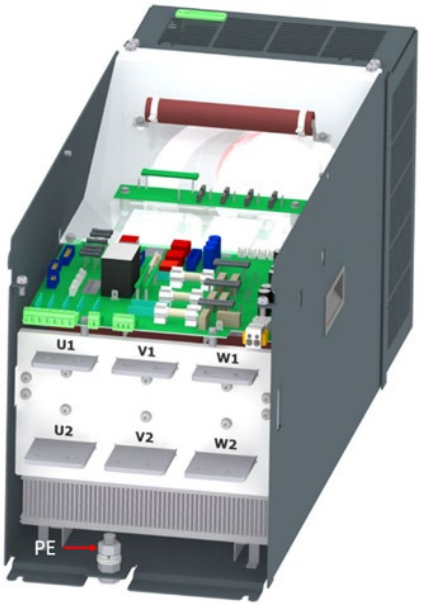

T6:

T8:

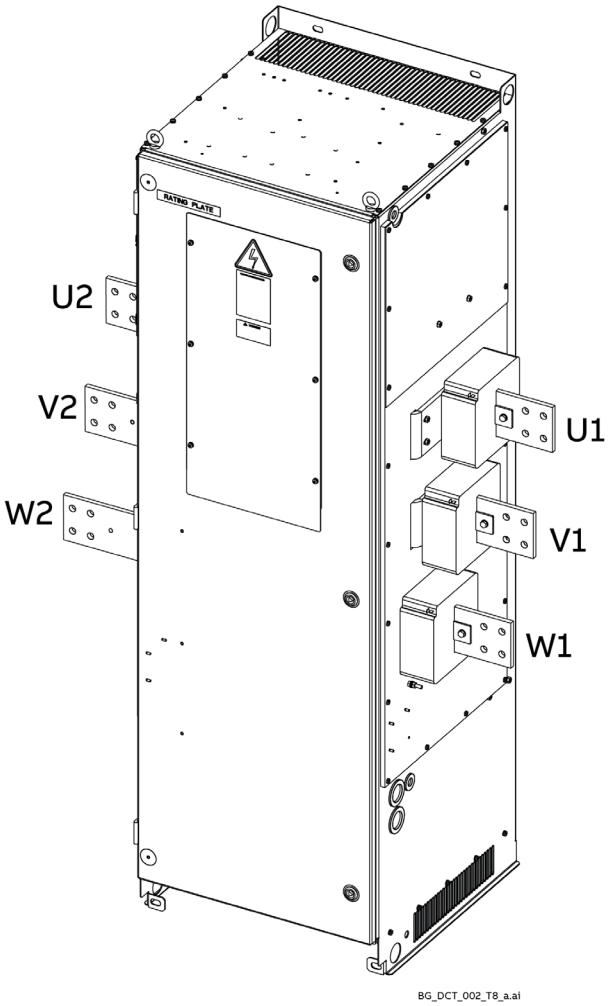
U2
V2
W2
U1
V1
W1
RATING PLATE
BG_DCT_002_T8_a.ai

Terminal covers for units size T1 ... T4

Terminal cover according to VBG 4 regulations (T1 ... T4 only)
For thyristor power controllers size T1 … T4 shrouds for protection against contact are provided.

Ident number	Remark
3ADT631236P0001	T1
3ADT631237P0001	T2
3ADT631240P0001	T3
3ADT631239P0001	T4

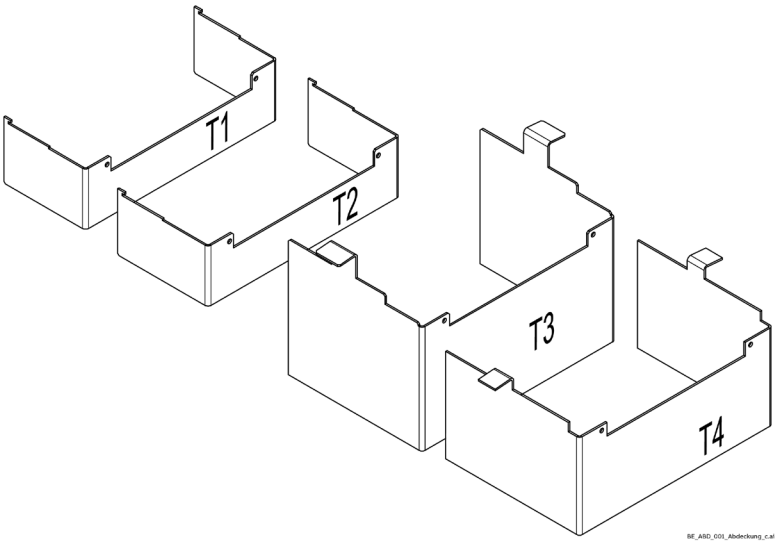

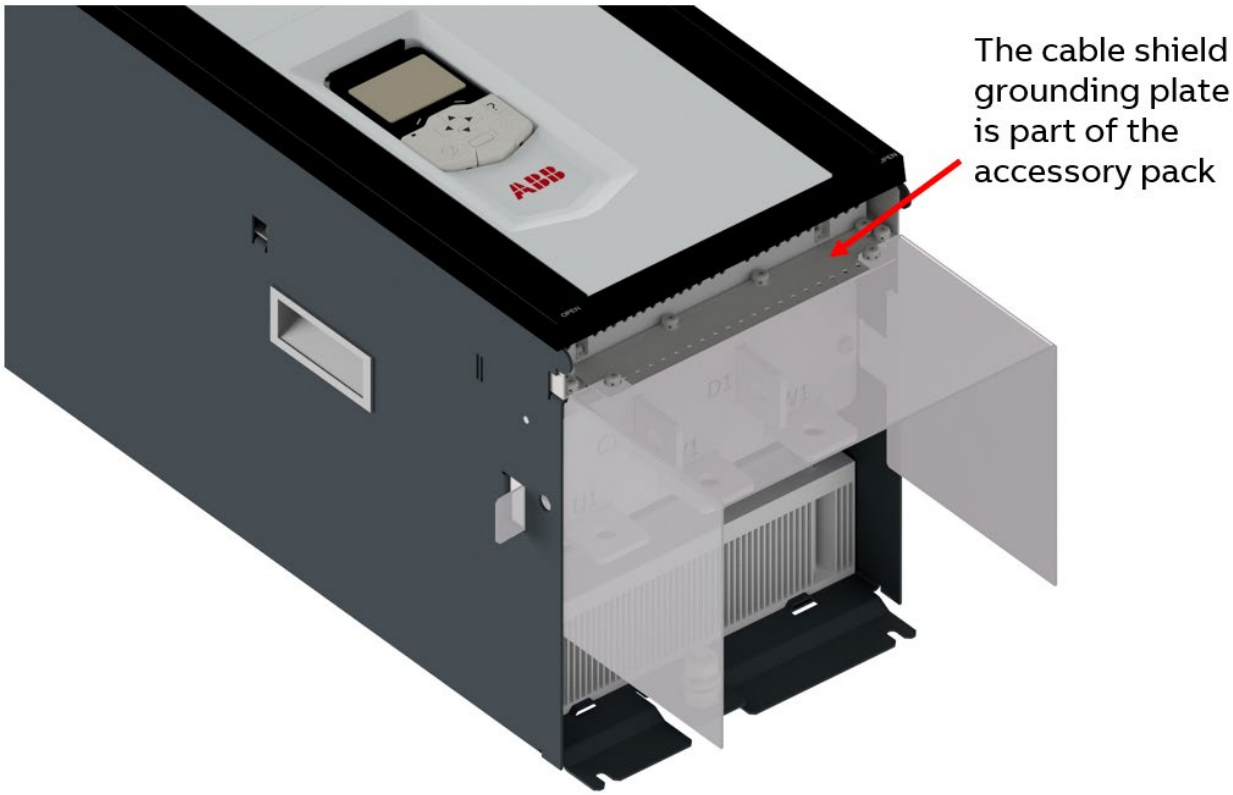

Example of a power terminal cover for T4 thyristor power controllers.

Cooling fans

Fan assignment for DCT880:

Size	Thyristor power controller	Configuration	Fan type
T1	DCT880-W0b-0020-0d … DCT880-W0b-0035-04/05	-	No cooling fan, convection cooled
	DCT880-W0b-0035-07 DCT880-W0b-0055-0d … DCT880-W0b-0125-0d	1	2 x 3ADT754041P0001 (internal 24 V_{DC})
T2	DCT880-W0b-0160-0d … DCT880-W0b-0245-0d		
T3	DCT880-W0b-0325-0d … DCT880-W0b-0360-0d		
	DCT880-W0b-0420-0d	2	4 x 3ADT754041P0001 (internal 24 V_{DC})
T4	DCT880-W0b-0550-0d … DCT880-W0b-0675-0d	3	1 x DCA0012171P0001 (230 V_{AC})
	DCT880-W0b-0740-0d		1 x 3ADT754028P0001 (230 V_{AC})
T5	DCT880-W03-0890-0d … DCT880-W02-0960-0d	4	1 x 3ADT754042R0002 (230 V_{AC})
T6	DCT880-W0b-1300-0d	5	1 x 3ADT754045R0001 (230 V_{AC})
	DCT880-W0b-1750-0d	6	1 x 3ADT754034P0001 (fan voltage see table below)
T8	DCT880-W03-2100-dd … DCT880-W03-4200-0d	7	1 x 3ADT754032P0001 (400 V_{AC})

Fan data for DCT880 (T1 … T5):

Fan	3ADT754041P0001	DCA0012171P0001		3ADT754028P0001		3ADT754042R0002	
Rated voltage [V_{AC}]	24 V_{DC} ①	230; 1~		230; 1~		230; 1~	
Tolerance [%]	+15/-50	+6/-10		+6/-10		±10	
Frequency [Hz]	-	50	60	50	60	50	60
Power consumption [W]	8.16	64	80	135	185	227	390
Current consumption [A]	0.34	0.29	0.35	0.59	0.82	1.1	1.7
Blocking current [A]	-	< 0.7	< 0.8	< 0.9	< 0.9	3.1	3.1
Air flow [m^3/h] freely blowing	180	925	1030	1860	1975	-	-
Air flow [m^3/h] @ working point	-	-		-		800; 1.0 A	850; 1.6 A
Maximum ambient temperature [°C]	< 70	< 70		< 60		< 55	
Useful lifetime of grease	Approximately 70,000 h/25°C	Approximately 40,000 h/60°C				Approximately 40,000 h/40°C	
Protection	DC ②	Internal temperature detector					
① Internally connected							
② Increased losses due to increased current with a blocked rotor will not result in a winding temperature, higher than permissible for the insulation class being involved.							

Fan data for DCT880 (T6):

Fan	3ADT754045R0001		3ADT754034P0001	
Rated voltage [V_{AC}]	230; 1~		400 Δ 500 ⅄	460 Δ
Tolerance [%]	± 10		± 10	
Frequency [Hz]	50	60	50	60
Power consumption [W]	227	390	660 Δ 600 ⅄	1100 Δ
Current consumption [A]	1.1	1.7	1.4 Δ 0.8 ⅄	1.8 Δ
Blocking current [A]	3.1	3.1	at 400 V Δ 8.0 at 500 V ⅄ 2.8	at 460 V Δ 8.0
Air flow [m^3/h] at working point	800 at 1.0 A	800 at 1.0 A	1600 at 1.2 A (400 V Δ) 1500 at 0.7A (500 V ⅄)	1700 @ 1.6 A (460 V Δ)
Maximum ambient temperature [°C]	< 55		< 55	
Useful lifetime of grease	Appr. 40,000 h/40°		Appr. 30,000 h/40°	
Protection	Internal		Temperature detector: $U_N \leq 230$ V~; $I_N \leq 2.5$ A~	

Fan data for DCT880 (T8):

Fan	3ADT754032P0001	
Rated voltage [V_{AC}]	400	400
Tolerance [%]	± 10	
Frequency [Hz]	50	60
Power consumption [W]	2100	3000
Current consumption [A]	4.0 Δ	5.3 Δ
Blocking current [A]	@ 400 V > 17	@ 400 V > 17
Air flow [m^3/h] at working point	4000 @ 4 A (400 V)	4500 @ 5.3 A (400 V)
Maximum ambient temperature [°C]	< 55	
Useful lifetime of grease	Appr. 30,000 h/40°	
Protection	Temperature detector: $U_N \leq 230$ V~; $I_N \leq 2.5$ A~	

Fan connection for DCT880 (T1 ... T5):

Unit housing:

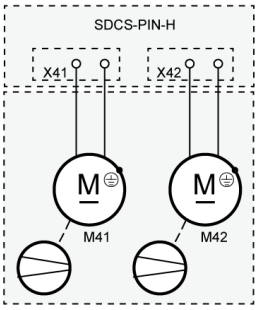

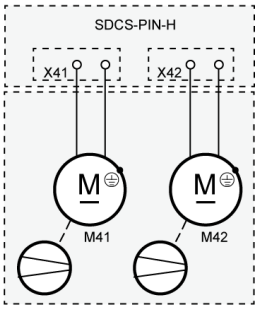

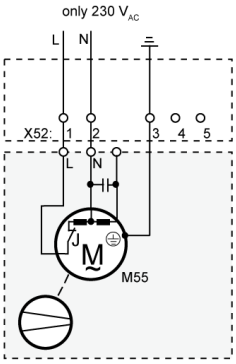

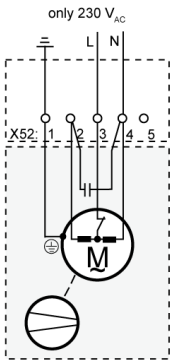

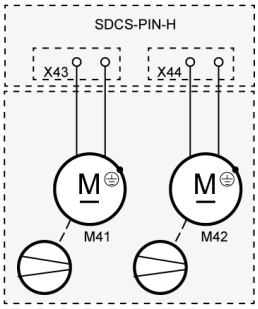

Configuration 1
T1, T2, T3

Configuration 2
T3

Configuration 3
T4

Configuration 4
T5

Fan connection for DCT880 (T6 and T8):
Unit housing:

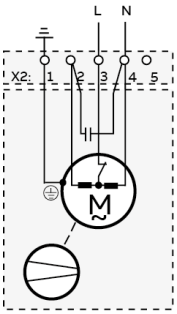

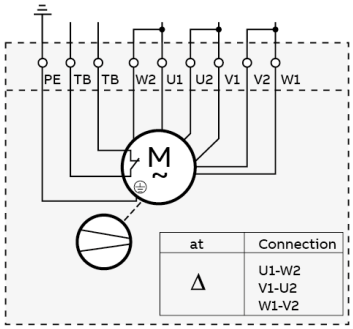

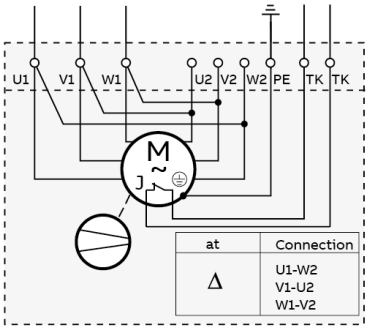

SA_880_011_DCS_FAN_c.ai

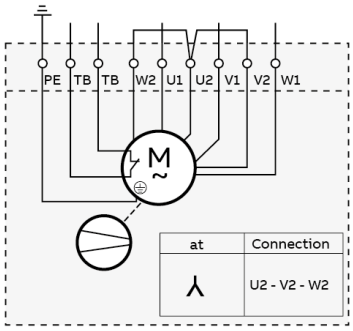

Configuration 5
T6

Configuration 6
T6

Configuration 7
T8

Control board SDCS-CON-H01 (T1 … T8)

The control circuit terminals are common for all sizes T1 … T8.

Location of the control circuit board SDCS-CON-H01

The SDCS-CON-H01 is mounted on an electronic tray. The electronic tray is attached in the housing by means of two hinges.

Watchdog function

The SDCS-CON-H01 has an internal watchdog. The watchdog controls the proper function of the SDCS-CON-H01 and the firmware. If the watchdog trips, it has the following effects:

- The thyristor firing control is reset and disabled.
- All DI's will not be processed.
- All DO's are frozen in the actual state.
- All AI's will not be processed.
- All programmable AO's are frozen in the actual state.

Recommended wire size - Tightening torques

Control cables:

Wire sizes:	Tightening torques:
0.5 … 2.5 mm^2 (24 … 12 AWG)	0.5 Nm (5 lbf·in) for both stranded and solid wiring

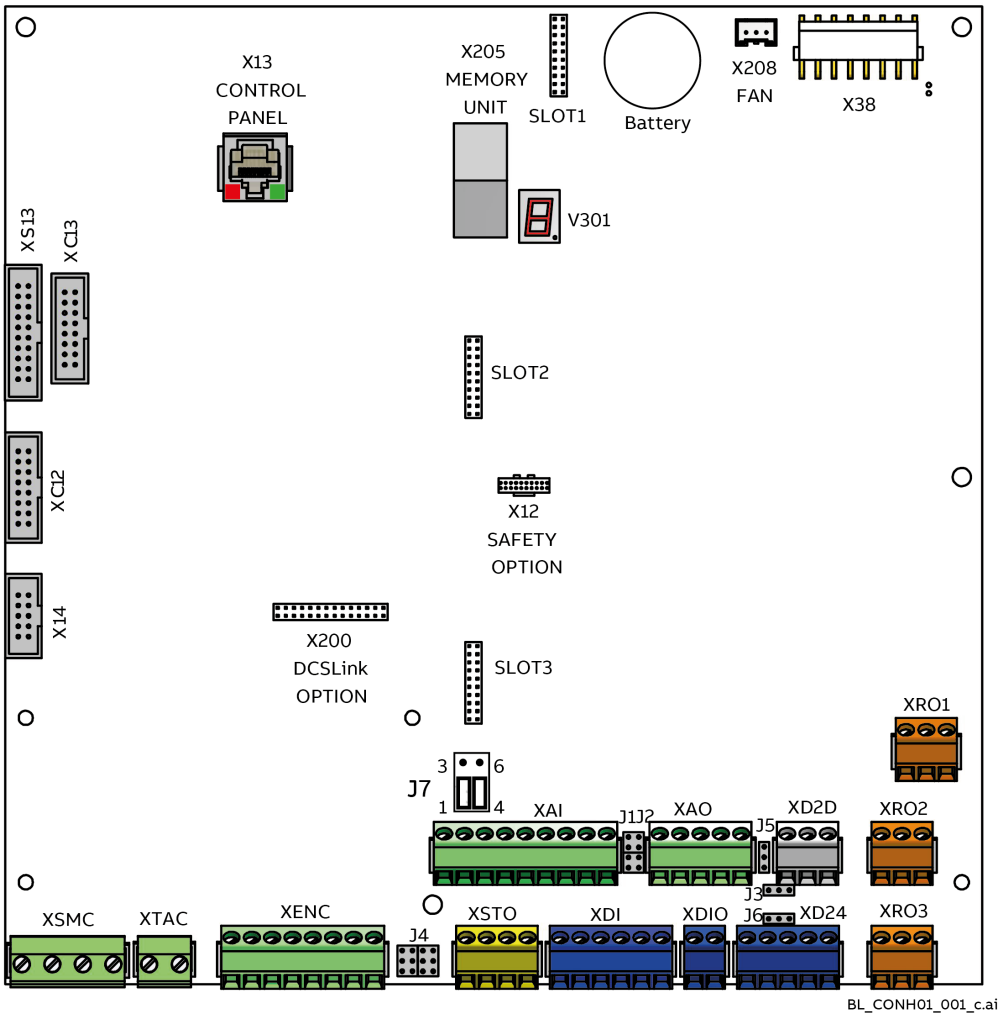

Intermediate cover

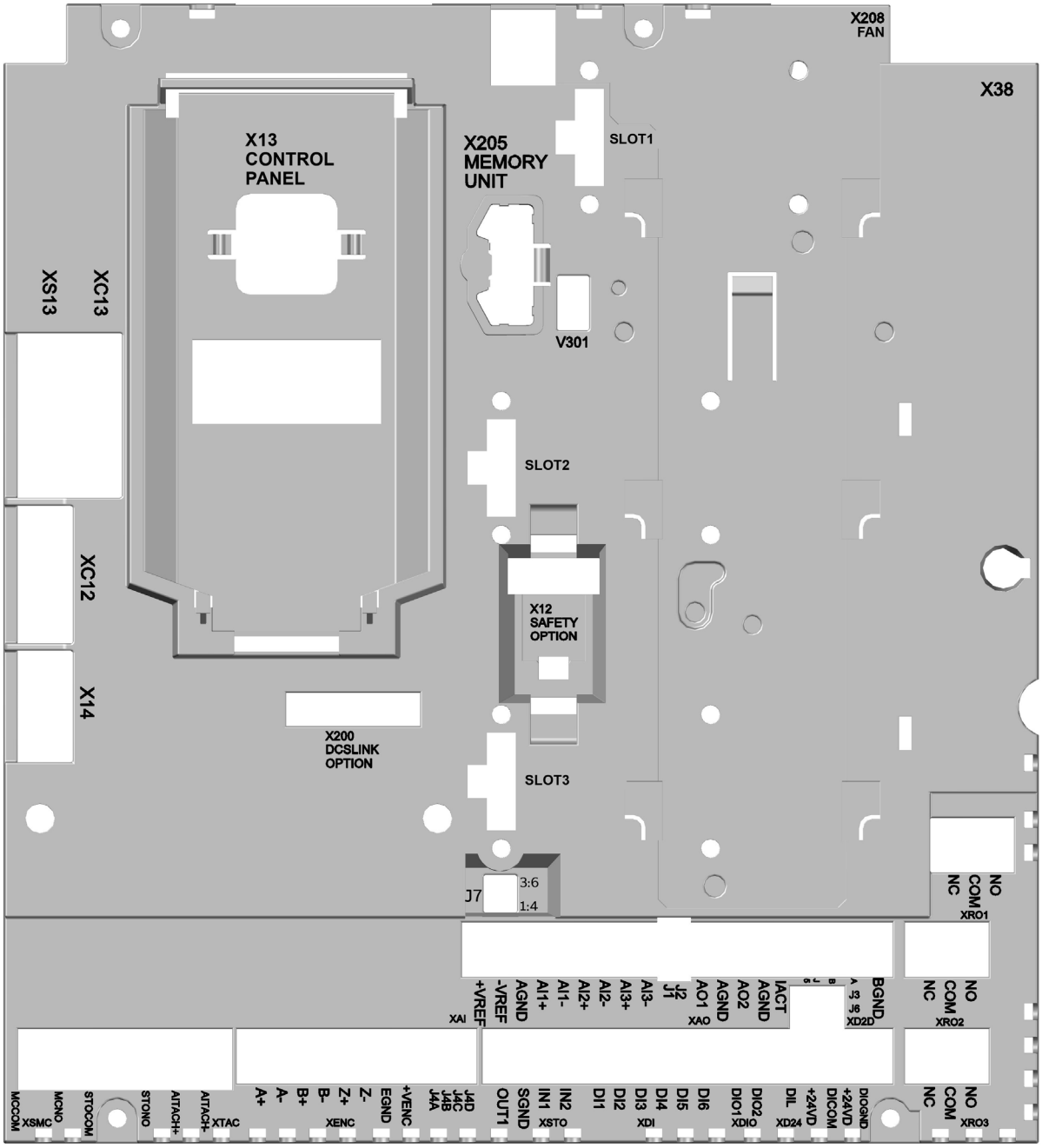

Control circuit terminal layout

Internal 24 V_{DC} used

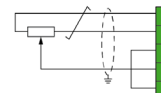

XAI	Reference voltages and analog inputs	
1	+VREF	+10 V_{DC}
2	-VREF	-10 V_{DC}
3	AGND	Common ground (connected to frame)
4	AI1+	±10 V, 0 (4) ... 20 mA or ± 20 mA
5	AI1-	[R_{in} = 100 Ω] depending on J1
6	AI2+	±10 V, 0 (4) ... 20 mA or ± 20 mA
7	AI2-	[R_{in} = 100 Ω] depending on J2
8	AI3+	±10 V
9	AI3-	
J1	J1	AI1 current / voltage selection jumper
J2	J2	AI2 current / voltage selection jumper

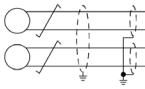

XAO	Analog outputs	
1	AO1	±10 V or 0 (4) ... 20 mA depending on J5
2	AGND	Common ground (connected to frame)
3	AO2	±10 V
4	AGND	Common ground (connected to frame)
5	IACT	Not used
J5	J5	AO1 current / voltage selection switch

XD2D	Device-to-device link	
1	B	Device-to-device link
2	A	
3	BGND	Isolated ground 2
J3	J3	Device-to-device link termination switch

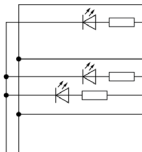

XRO1, XRO2, XRO3	Relay outputs	
11	NC	250 V_{AC} / 30 V_{DC}, 2 A
12	COM	
13	NO	
21	NC	250 V_{AC} / 30 V_{DC}, 2 A
22	COM	
23	NO	
31	NC	250 V_{AC} / 30 V_{DC}, 2 A
32	COM	
33	NO	

XD24	Digital interlock	
1	DIL	Digital interlock, ground: DICOM
2	+24VD	+24 V_{DC}, 200 mA, ground: DIOGND
3	DICOM	Isolated digital input ground for DI1 ... DI5 and DIL
4	+24VD	+24 V_{DC}, 200 mA, ground: DIOGND
5	DIOGND	Isolated digital input / output ground for DI6, DIO1 and DIO2
J6	J6	Digital ground selection switch (DIOGND and DICOM)

XDIO	Digital input / outputs	
1	DIO1	Relay driver: max. +24 V_{DC}, 2k, 100n, DIOGND; +24 V_{DC}, DO, +3.3 V_{DC}, DI
2	DIO2	

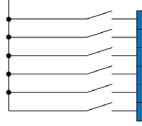

XDI	Digital inputs	
1	DI1	DI1 ... DI5 and DIL: max. +24 V_{DC}, 2k, 100n, DICOM; +3.3 V_{DC}, DI
2	DI2	
3	DI3	
4	DI4	DI6: max. +24 V_{DC}, 2k, 100n, DIOGND; +3.3 V_{DC}, DI
5	DI5	
6	DI6	

XENC	Encoder	
1	A+	Not in use for DCT880
2	A-	Not in use for DCT880
3	B+	Not in use for DCT880
4	B-	Not in use for DCT880
5	Z+	Channel Z+ function depending on J4C
6	Z-	Channel Z- function depending on J4C
7	EGND	Common ground (connected to frame)
8	+VENC	Not in use for DCT880
J4A	J4A	Not in use for DCT880
J4B	J4B	
J4C	J4C	
J4D	J4D	Not in use for DCT880
J7A	J7A	Selection of 3-wire PT100 temperature measurement
J7B	J7B	

XSMC	Mains contactor		
1	MCCOM	250 V_{AC} / 30 V_{DC}, 2 A	Fixed output for the mains contactor
2	MCNO		
3	STOCOM	250 V_{AC} / 30 V_{DC}, 2 A	Not in use for DCT880
4	STONO		

XSTO	Safe torque off	
1	OUT1	Open circuits block the firing pulses
2	SGND	Common ground (connected to frame)
3	IN1	Open circuits block the firing pulses
4	IN2	
X13	Control panel connection	
X205	Memory unit connection	

SA_880_001_DCT_d.ai

External 24 V_{DC} used

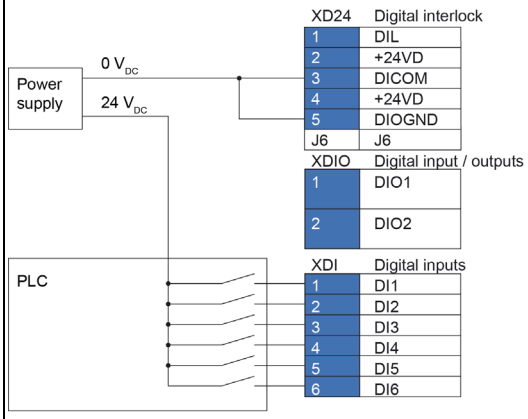

SA_880_010_DCT-PLC_a.ai

WARNING
The XSTO terminals must not be used for thyristor power controllers.
They are not offering any certified safety functionality.

XAI: Reference voltages and analog inputs

+VREF	+10 V_{DC}, ±1 %. R_L = 1 … 10 kΩ. Maximum wire size 2.5 mm^2.
-VREF	-10 V_{DC}, ±1 %. R_L = 1 … 10 kΩ. Maximum wire size 2.5 mm^2.
AI1+	±10 V [R_{in} ≥ 200 kΩ], 0 (4) ... 20 mA or ±20 mA [R_{in} = 100 Ω] depending on J1.
AI1-	Maximum wire size 2.5 mm^2. Differential inputs, common mode range ±30 V. Sampling interval per channel: 0.25 ms. Hardware filter: 0.25 ms. Resolution: 15 bit + sign. Inaccuracy: 1 % of full-scale range.
AI2+	±10 V [R_{in} ≥ 200 kΩ], 0 (4) ... 20 mA or ±20 mA [R_{in} = 100 Ω] depending on J2.
AI2-	Maximum wire size 2.5 mm^2. Differential inputs, common mode range ±30 V. Sampling interval per channel: 0.25 ms. Hardware filter: 0.25 ms. Resolution: 15 bit + sign. Inaccuracy: 1 % of full-scale range.
AI3+	±10 V [R_{in} ≥ 200 kΩ].
AI3-	Maximum wire size 2.5 mm^2. Differential inputs, common mode range ±30 V. Sampling interval per channel: 0.25 ms. Hardware filter: 0.25 ms. Resolution: 15 bit + sign. Inaccuracy: 1 % of full-scale range.
	Parameter settings see Group 12 Standard AI.

XAO: Analog outputs

AO1	±10 V [load current ≤ 10 mA] or 0 (4) ... 20 mA [R_L ≤ 500 Ω] depending on J5. Maximum wire size 2.5 mm^2. Frequency range: 0 … 300 Hz. Resolution: 11 bit + sign. Inaccuracy: 2 % of full-scale range.
AO2	±10 V [load current ≤ 10 mA]. Maximum wire size 2.5 mm^2. Frequency range: 0 … 300 Hz. Resolution: 11 bit + sign. Inaccuracy: 2 % of full-scale range.
IACT	Not in use for DCT880.
	Parameter settings see Group 13 Standard AO.

XD2D: Device-to-device link

B	Maximum wire size 2.5 mm^2.
A	Physical layer: RS-485. Termination by switch J3.
	Parameter settings see Group 60 DDCS communication.

The device-to-device link is a daisy-chained RS-485 transmission line that allows basic master-follower communication with one master and multiple followers. It is also used for the power optimizer.

Set the termination switches J3 (see Jumpers and switches) next to terminal block XD2D to terminated (▮▮▮) at the two physical ends of the device-to-device link. All intermediate switches have to be set to not terminated (▮▮▮).
Use double shielded twisted-pair cable (~ 100 Ω, for example, PROFIBUS compatible cable) for the wiring. For best immunity, high quality cable is recommended. Keep the cable as short as possible. The maximum complete length of the link is 50 meters. Avoid unnecessary loops and running the link near power cables. The following diagram shows the wiring of the device-to-device link.

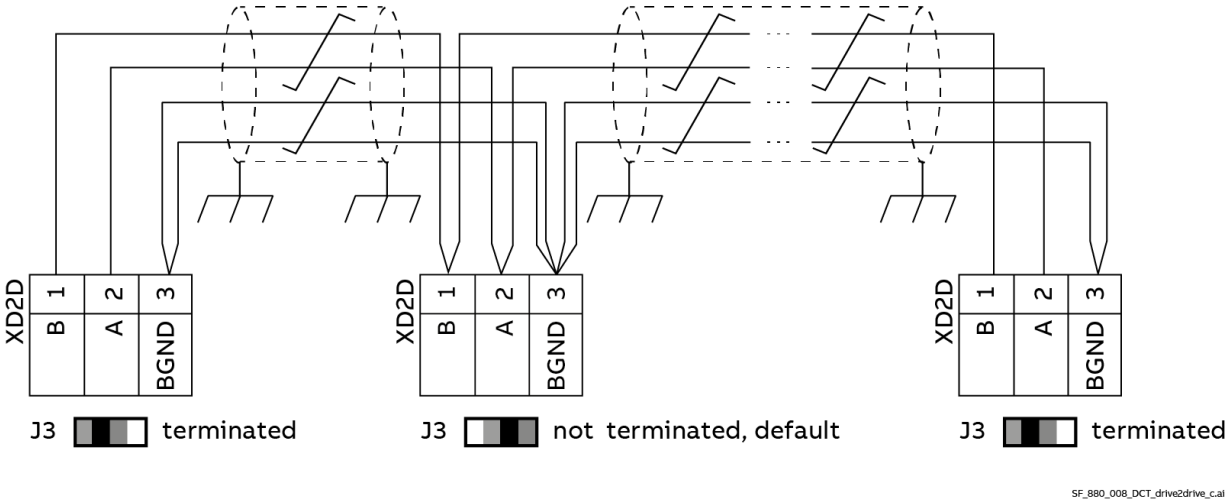

RO1, RO2, RO3: Relay outputs

NC	250 V_{AC}/30 V_{DC}, 2 A.
COM	Maximum wire size 2.5 mm^2.
NO	Varistor protected.
	Parameter settings see Group 10 Standard DI, RO.

XD24: Digital interlock

DIL	The digital interlock works like a normal digital input and has no special function in the DCT880. It can be selected for example as the source for an emergency stop command or any other external event. See the firmware part of this document for more information. Maximum wire size 2.5 mm^2. +24 V_{DC} logic levels: low < 5 V_{DC}, high > 15 V_{DC}. R_{in} = 2 kΩ. Hardware filter: 0.04 ms. Digital filter up to 100 ms. Related ground is DICOM.
+24VD	+24 V_{DC}, 200 mA. Total load power of these outputs is 4.8 W (200 mA, 24 V_{DC}) minus the power taken by DIO1 and DIO2. Maximum wire size 2.5 mm^2. Related ground is DIOGND.
	Parameter settings see Group 10 Standard DI, RO. Switch on/off delays see chapter Switch on/off delays (reaction times).

XDIO: Digital inputs/outputs

DIO1	Maximum wire size 2.5 mm^2.
DIO2	As input: – +24 V_{DC} logic levels: low < 5 V_{DC}, high > 15 V_{DC}. – R_{in} = 2 kΩ. – Filter: 0.25 ms. As output: – Total output current from +24VD is limited to 200 mA. 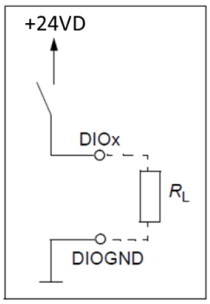 – Filter: 0.04 ms. – Related ground is DIOGND.
	Parameter settings see Group 11 Standard DIO, FI, FO. Switch on/off delays see chapter Switch on/off delays (reaction times).

XDI: Digital inputs

DI1	Maximum wire size 2.5 mm^2.
DI2	+24 V_{DC} logic levels: low < 5 V_{DC}, high > 15 V_{DC}.
DI3	R_{in} = 2 kΩ.
DI4	Hardware filter: 0.04 ms.
DI5	Digital filter up to 100 ms.
DI6	DI1 ... DI5: Related ground is DICOM. DI6: Related ground is DIOGND.
	Parameter settings see Group 10 Standard DI, RO. Switch on/off delays see chapter Switch on/off delays (reaction times).

XENC: 3-wire PT100 temperature measurement

Z+	Maximum wire size 2.5 mm^2.
Z-	Used for 3-wire PT100 temperature measurement.
EGND	One 3-wire PT100 for high precision temperature measurement can be connected between encoder inputs Z+, Z- and EGND (ground). Additionally set jumper J7A = 2-3 and jumper J7B = 5-6. 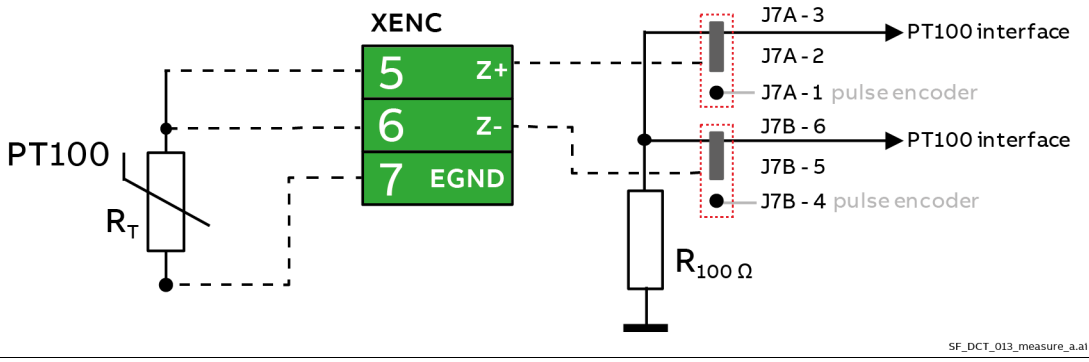

	The 3-wire PT100 temperature measurement can be selected by. 35. Temperature Measurement 4 Temp 1 Source XENC:5-6-7 5 Temp 1 Conversion mode XENC:5-6-7 This function is released for: – Firmware 1.08 and higher. – SDCS-CON-H01 REV E and higher.
	Parameter settings see Group 35 Temperature Measurement.

XTAC: Analog tachometer

AITACH+	Not in use for DCT880.
AITACH-	

XSMC: Mains contactor

MCCOM	Fixed output for the mains contactor.
MCNO	250 V_{AC}/30 V_{DC}, 2 A. Maximum wire size 2.5 mm^2. Varistor protected. **Note:** It is also possible to use one of the relay outputs. Examples see chapter Wiring.
STOCOM	Not in use for DCT880.
STONO	**WARNING** The XSTO terminals must not be used for thyristor power controllers. They are not offering any certified safety functionality.
	Mains contactor ON command: E.g., 06.14 Leg 1 Status Word bit 11 = high.

XSTO: Safe torque off

OUT1	For the thyristor power controller to start, both connections (OUT1 to IN1 and IN2) must be closed. By default, the terminal block has wires to close the circuit. Removing the wires will block the firing pulses. **WARNING** The XSTO terminals must not be used for thyristor power controllers. They are not offering any certified safety functionality. Maximum wire size 2.5 mm^2. Current consumption per channel: 55 mA (continuous).
IN1	
IN2	

X205 Memory unit connection

The thyristor power controller is equipped with a memory unit that is plugged into X205 on the SDCS-CON-H01. The memory unit contains the firmware, the parameters, and the application program (as option). It is possible to manage the parameters by control panel, PC tool or overriding control. Changed parameters are stored immediately in the memory unit.
In addition, the fault logger entries are stored in the memory unit during de-energizing the auxiliary power.
When a thyristor power controller is replaced, the parameter settings can be retained by transferring the memory unit from the defective thyristor power controller to the new thyristor power controller.

WARNING
Do not remove or insert a memory unit when the thyristor power controller is powered.

After power-up, the thyristor power controller will scan the memory unit. If different parameter settings are detected, they are copied to the thyristor power controller. This may take several minutes.

Replacing the memory unit

Make sure, that the auxiliary power is off. Unscrew the memory unit and pull it out. Replace the memory unit in reverse order.

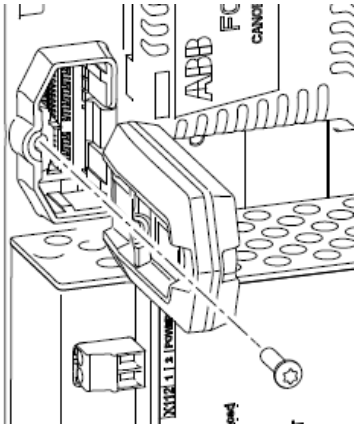

Screw is M3*5.

Additional terminals

- Use connectors Slot1 … Slot3 for F-type I/O extension modules and F-type fieldbus adapters.
- Connectors XC12, XS13, X14 and X38 connect the SDCS-CON-H01 to the SDCS-PIN-H11 for voltage, current, temperature measurement and safety.
- Use connector X13 to connect the control panel either directly via a jack plug or via a CAT 1:1 cable (< 3 m) with RJ-45 plugs.

Ground isolation diagram

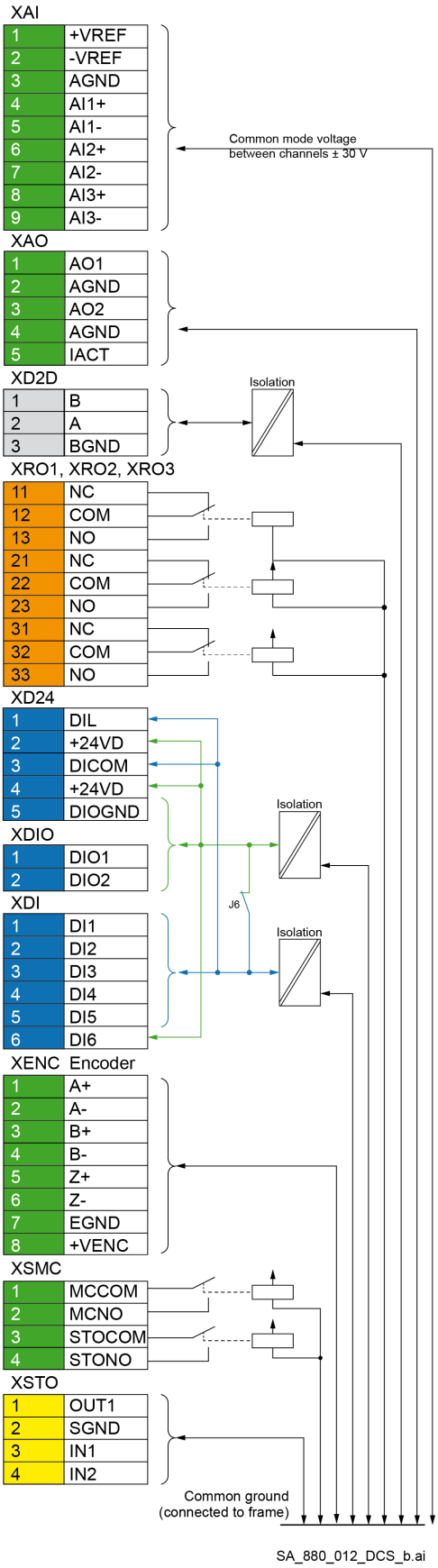

Open

Closed, default

Switch J6 settings:
The ground (DICOM) of digital inputs DI1 … DI5 and DIL is separated from the ground (DIOGND) of digital inputs/outputs DIO1, DIO2 and DI6. The insulation voltage between them is 50 V.

All digital inputs and outputs share the same ground, default.

WARNING
The XSTO terminals must not be used for thyristor power controllers.
They are not offering any certified safety functionality.

Jumpers and switches

Jumper/Switch	Description	Positions	
J1 (AI1)	Determines whether analog input AI1 is used as a current or voltage input.		Current (I)
			Voltage (U), default.
J2 (AI2)	Determines whether analog input AI2 is used as a current or voltage input.		Current (I)
			Voltage (U), default.
J3 (D2D)	Device-to-device link termination. Must be set to terminated position when the thyristor power controller is the last unit on the link.		Bus is not terminated, default.
			Bus is terminated.
J4A ... J4D	Not in use for DCT880.	n/a	n/a
J5 (AO1)	Determines whether analog output AO1 is used as a current or voltage output.		Voltage (U), default.
			Current (I)
J6 (grounding)	Digital ground selection switch. Determines whether DICOM is separated from DIOGND (e.g., the common reference for digital inputs floats). See Ground isolation diagram. The insulation voltage between them is 50 V.		DIOGND and DICOM separated.
			DIOGND and DICOM connected, default.
J7A, J7B	OnBoard 3-wire PT100 temperature measurement interface.	3 1	Not in use for DCT880, default.
		6 4	Temperature measurement.

Switch on/off delays (reaction times)

Via FEA-03	Hardware	Type	Delay		DIP switch
-	SDCS-CON-H01	DI, DIO	Switch on delay	2 ms	-
			Switch off delay	1 ms	-
No	FDIO-01	DI	Switch on delay	15 ms	1 ms
				26 ms	10 ms
			Switch off delay	13 ms	1 ms
				21 ms	10 ms
	FIO-01	DIO	Switch on delay	3 ms	-
			Switch off delay	1 ms	-
	FIO-11	DIO	Switch on delay	5 ms	-
			Switch off delay	3 ms	-
Yes	FDIO-01	DI	Switch on delay	16 ms	1 ms
				26 ms	10 ms
			Switch off delay	15 ms	1 ms
				21 ms	10 ms
	FIO-01	DIO	Switch on delay	3 ms	-
			Switch off delay	1 ms	-
	FIO-11	DIO	Switch on delay	5 ms	-
			Switch off delay	3 ms	-

The given values are approximate values which were measured using a unit. Please consider, that for some operations e.g., starting and stopping, thyristor-based units cannot react before a full mains cycle has passed (worst-case scenario).

DCSLink board SDCS-DSL-H12 (T8)

The SDCS-DSL-H12 provides communication between control unit and power unit via the optical power link (V1 and V2, V11 and V12).

Optical power link (V1 and V2, V11 and V12):

– Communication between control unit and one power unit for units size T8.

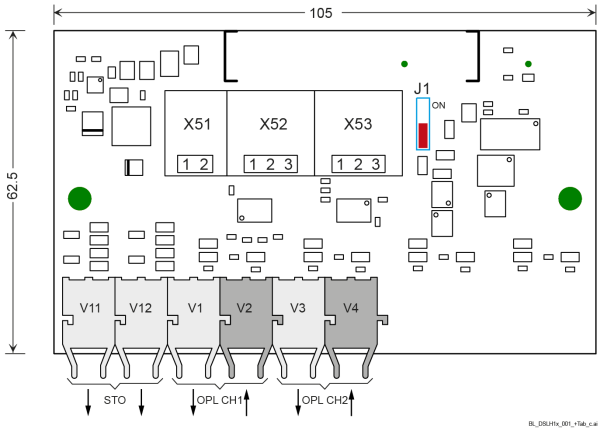

Jumper coding	
J1 bus termination	
	OFF, (default).
	ON = 120 Ω.

SDCS-DSL-H12	– 1 x optical power link channels (V1 and V2, V11 and V12). – Used for all units size T8.

Note: Maximum length of the plastic optic fiber cable between SDCS-DSL-H12 and SDCS-OPL-H01 is 5 m.

Power interface board SDCS-PIN-H11 (T1 ... T5 and T6 special design)

The power interface terminals are common for all units size T1 … T5 and T6 special design.

Recommended wire size - Tightening torques

Power interface cables:

Wire sizes:	Tightening torques:
0.5 … 2.5 mm^2 (24 … 12 AWG)	0.5 Nm (5 lbf in) for both stranded and solid wiring

Power interface circuit terminal location

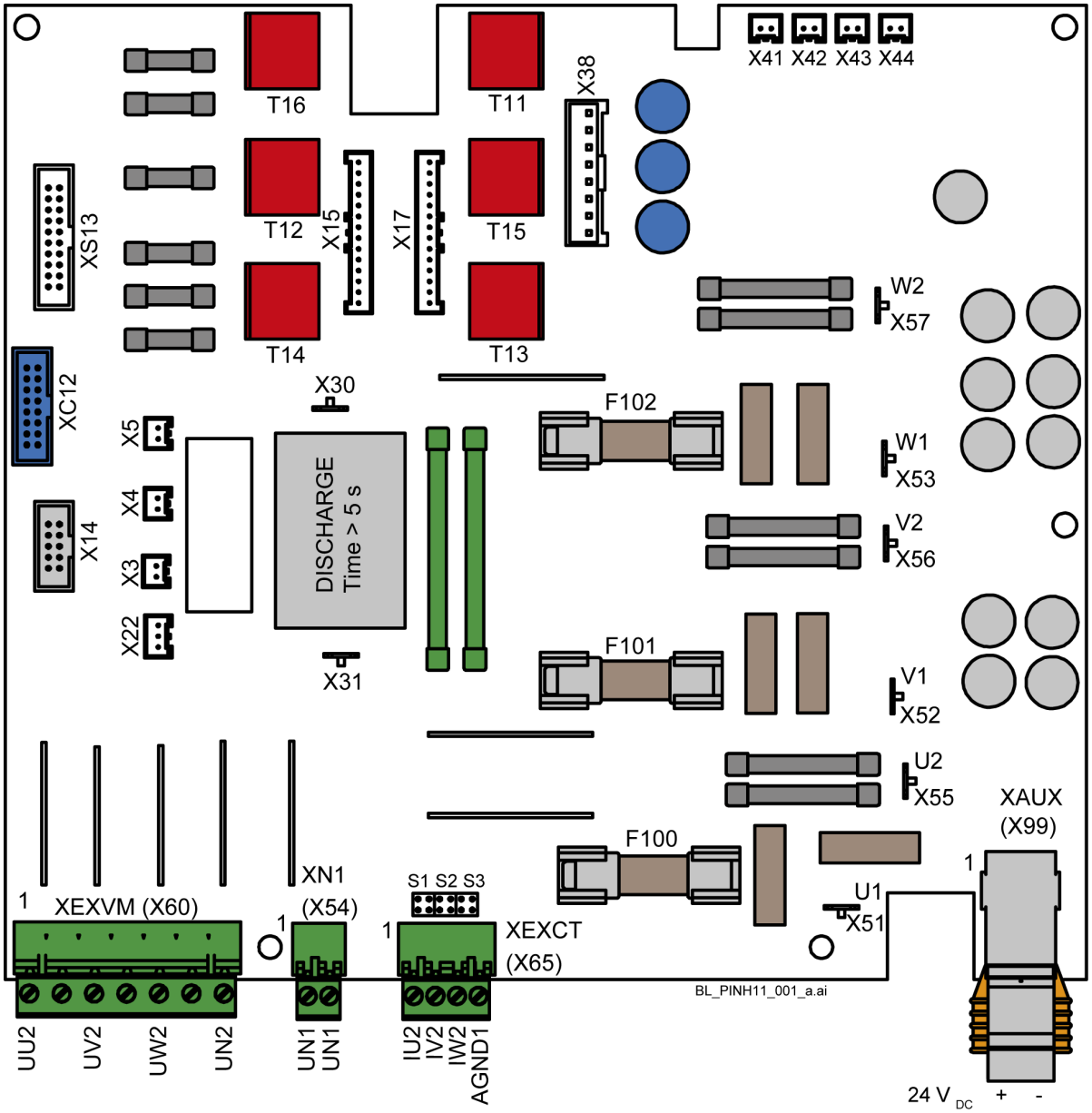

Fuses F100 ... F102:

KTK 25 = 25 A.

Functions

The thyristor power controller provides an adjusted setting for current-, voltage measurement and burden resistors.

The SDCS-PIN-H11 provides:

- The power supply for all small voltages of the whole thyristor power controller and the connected options (XAUX).
- An internal +24 V_{DC} power supply for the cooling fans of unit sizes T1 … T3 (X41 … X44).
- An internal high ohmic measurement of the mains voltages (X51 … X53).
- An interface for external high ohmic measurement of the output voltages (terminal block XEXVM/X60).
- An interface for internal current transformers measuring the output current (X3 … X5).
- An interface for external current transformers measuring the output current (terminal block XEXCT/X65).
- An interface for the heatsink temperature measurement with a PTC resistor (X22).
- A snubber circuit for thyristor protection together with the snubber resistor mounted on the heatsink (X30 and X31).
- The fuses protect the electronic against problems with the mains- or the output voltage (F100 … F102).
- The control of the thyristor power controller (firing pulses).
- The firing pulse transformers for the power part with 2 or 3 thyristor modules are located on the electronic board (T11 … T16).

Power interface circuit terminal layout

XAUX	Auxiliary voltage input (X99)	
1	+24VI	24 V_{DC}, 2.5 A *
2	GNDS	Common ground (connected to frame)
XN1	Mains voltage neutral (X54)	
1	UN1	Neutral of mains (N1) not directly connected to ground (PE) or to XEXVM:7.
2	UN1	XN1:1 and XN1:2 are internally connected
XEXVM	External voltage measurement (X60)	
1	UU2	External voltage measurement for U2
2	-	Not used
3	UV2	External voltage measurement for V2
4	-	Not used
5	UW2	External voltage measurement for W2
6	-	Not used
7	UN2	Neutral of load (N2) not directly connected to ground (PE) or to XEXVM:7.
XEXCT	External current measurement (X65)	
1	IU2	External current measurement (CT) for U2
2	IV2	External current measurement (CT) for V2
3	IW2	External current measurement (CT) for W2
4	AGND1	Common ground (connected to frame)
S1	S1	Activates external current measurement (CT) for U2
S2	S2	Activates external current measurement (CT) for V2
S3	S3	Activates external current measurement (CT) for W2

* Exception: DCT880-W0x-0420 ≥ 3 A

SA 880 006 DCT c.ai

XAUX: Auxiliary voltage input (X99 for T1 … T5 and T6 special design)

+24VI	Auxiliary voltage	+24 V_{DC}, 2.5 A. Exception: DCT880-W0b-0420 ≥ 3 A. Please be advised, that each DCT880 should have its own 24 V_{DC} power supply.
	Tolerance	±10 %.
	Inrush current	The inrush is not limited by the board. The inrush depends on the connected power supply. Thus, each DCT880 should have its own 24 V_{DC} power supply.
	Power consumption	72 W.
	Auxiliary voltage buffering	40 ms.
	Power fail	< 20.5 V_{DC}; recovery at 20.8 V_{DC} (0.3 V hysteresis).
	Power fail delay time	10 ms.
	Additional information	Auxiliary power supply for the control unit. Maximum wire size 2.5 mm^2.

XN1: Mains voltage neutral (X54)

UN1	Neutral of mains. XN1:1 and XN1:2 are internally connected. Maximum wire size 2.5 mm^2. Cable insulation must withstand 525 V_{AC}.

External measurement of output voltage and output current (CTs)

Voltage and current measurement are used to supervise the load. This includes among other things:

- Monitoring the load.
- Resistance calculation of the load.
- Aging of the load.
- Fault detection e.g., overload.
- Detection of circulating currents in the transformer e.g., in multitap configurations.

The decision to use external voltage and current measurement depends on the type of load. The load types can be divided into loads with and loads without transformers.

1. Loads without transformers do not need external measurement devices. The output current of each leg is measured by means of internal CTs. The output voltage is calculated using the measured mains voltage, the firing angle alpha, the measured output current, and the known load configuration.
2. Loads with transformers need external measurement devices in case accurate load monitoring on the secondary side of the transformer is desired.

Note: For power calculation, external measurement devices are not needed since the power on the primary side and secondary of a transformer is the same. Except of course for power loss calculation of the transformer itself.

XEXVM: External voltage measurement (X60)

UU2	External voltage measurement for phase U2. Maximum wire size 2.5 mm^2. Cable insulation must withstand 525 V_{AC}.
UV2	External voltage measurement for phase V2. Maximum wire size 2.5 mm^2. Cable insulation must withstand 525 V_{AC}.
UW2	External voltage measurement for phase W2. Maximum wire size 2.5 mm^2. Cable insulation must withstand 525 V_{AC}.
UN2	Neutral of load (N2). Maximum wire size 2.5 mm^2. Cable insulation must withstand 525 V_{AC}.
	Activation, see 99.60 Voltage Measurement Configuration.

XEXCT: External current measurement (X65)

IU2	External current measurement (CT) for phase U2. Maximum wire size 2.5 mm^2. External interface board SDCS-CMI-H02 is required.
IV2	External current measurement (CT) for phase V2. Maximum wire size 2.5 mm^2. External interface board SDCS-CMI-H02 is required.
IW2	External current measurement (CT) for phase W2. Maximum wire size 2.5 mm^2. External interface board SDCS-CMI-H02 is required.
	Activation, see 99.70 Current Measurement Configuration.

Jumpers, external current measurement

Jumper	Description	Positions	
S1 (U2). S2 (V2). S3 (W2).	Activates external current measurement (CT) for phase U2. Activates external current measurement (CT) for phase V2. Activates external current measurement (CT) for phase W2.	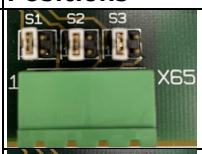	Internal current measurement (CT) active, default. See also 99.70 Current Measurement Configuration.
		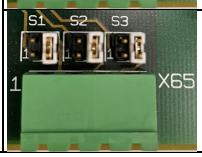	External current measurement (CT) active via XEXCT (X65). See also 99.70 Current Measurement Configuration.

Power supply board SDCS-POW-H01 (T6 standard and T8)

The SDCS-POW-H01 is designed for DCT880 units and is mounted on the electronic tray. It is used for sizes T6 standard and T8.
The SDCS-POW-H01 generates all necessary DC voltages for the SDCS-CON-H01 and all other electronic boards. The input voltage is automatically detected and set to either 230 V_{AC} or 115 V_{AC}.

X38 connection to the control board.

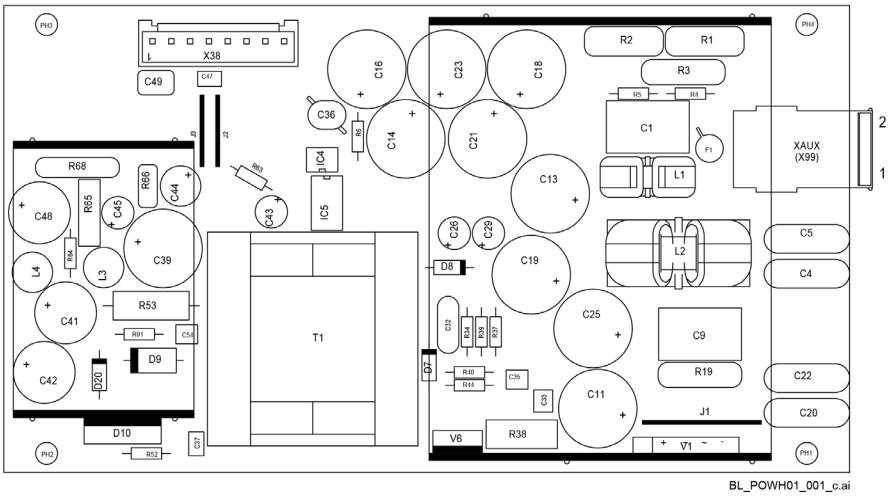

Technical data

Auxiliary supply voltage XAUX (X99 for T6 standard and T8)

Auxiliary voltage	115 V_{AC}	230 V_{AC}	230 V_{DC}
Tolerance	-15 %/+10 %	-15 %/+10 %	-15 %/+10 %
Frequency	45 Hz ... 65 Hz	45 Hz ... 65 Hz	-
Power consumption	160 VA ①	170 VA ①	120 W ①
Nominal output power ②	96 W	96 W	96 W
Inrush current ③	20 A/20 ms	10 A/20 ms	15 A/20 ms
Recommended fusing	6 AT	6 AT	6 AT
Mains buffering	min. 30 ms	min. 30 ms	min. 30 ms
Power fail	< 90 V_{AC}	< 90 V_{AC}	< 115 V_{DC}

① At 25°C.
② 3.5 A x 24 V_{DC} + 0.25 A x 48 V_{DC} = 96 W.
③ Frequently switching ON and OFF increases the inrush current.

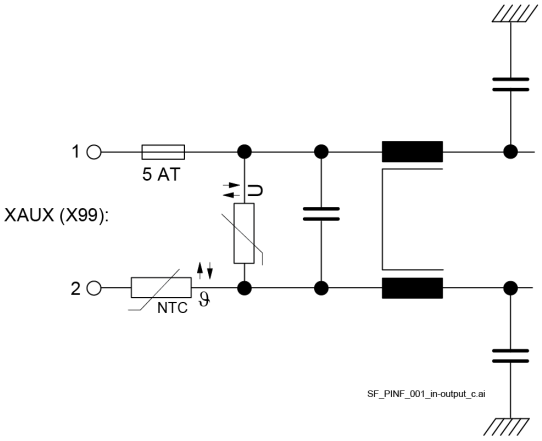

Measuring board SDCS-PIN-H51 (T6 standard and T8)

The measuring board is equipped with inputs for current measurement via CTs, high ohmic voltage measurement and an input for a temperature sensor. Units size T6 standard and T8 contain two measuring boards.

1. Three identical channels for current measurement on the mains side via CTs connected to an SDCS-CMI-H02 via X65.
   The AC current is rectified by diodes on the measurement board.
   The burden resistor is automatically scaled by the type code setting in the firmware for CT ratios of either 1:2500 or 1:4000.
2. Mains voltage and load voltage are measured by four different types of inputs.
   110 V_{AC} ... 525 V_{AC}: Voltage measurement via XU2, XV2, XW2 and XD2 (about 1 MOhm to ground).
   526 V_{AC} ... 990 V_{AC}: Voltage measurement via XU1, XV1, XW1 and XD1 (about 2 MOhm to ground).
   100 V_{AC} ... 990 V_{AC}: Galvanically isolated voltage measurement via X15 (see chapter Circuit diagram T8 with galvanic isolation (+S189). For this two transformers T90 have to be used. X15 provides 27.4 kOhm inputs.
3. X22 is used for the DCT880 NTC temperature sensor.
4. XC12 and X14 connection to SDCS-CON-H01.

Settings of the SDCS-PIN-H51 for units size T6 standard and T8

Current coding

Size		**T6 standard**		**T8**				
Current transformer ratio		2500:1		4000:1				
Rated current [A_{DC}] ①		1300	1750	2100	2700	3200	3900	4200
R101 ... R116	18 Ω	No cutting required. Automatic current coding via type code setting in the firmware.						
R117	33 Ω							
R118	68 Ω							
R119	120 Ω							
R120	249 Ω							
R121	560 Ω							

① Rated current see the name plate of the unit.

Voltage coding

Mains voltage	110 V_{AC} ... 525 V_{AC}	526 V_{AC} ... 990 V_{AC}	100 V_{AC} ... 990 V_{AC}
Type code voltages (dd)	04 (400 V), 05 (525 V)	07 (690 V), 08 (800 V), 10 (990 V)	04 (400 V) with +189, 05 (525 V) with +189, 06 (600 V) with +189, 07 (690 V) with +189, 08 (800 V) with +189, 10 (990 V) with +189
Used connectors	XU2, XV2, XW2, XD2	XU1, XV1, XW1, XD1	Standard: X15 via 2 transformers T90. Multitap: X15 via 2 transformers T93.
Parameter settings 95.19 Set: Unit input voltage scaling	0 V	0 V	0 V

Switches

Leave switch J1 on separated (default).

Location of the SDCS-PIN-H51

Size T6 standard and T8:

– The 2 boards are located inside the unit.

Layout of the SDCS-PIN-H51

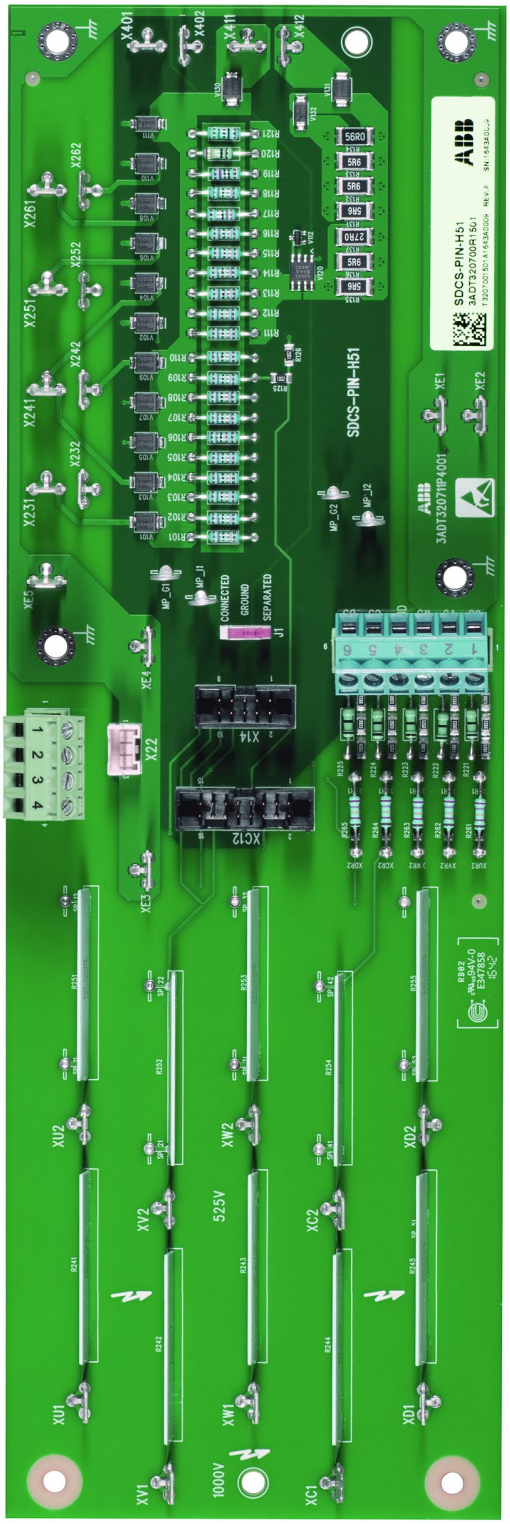

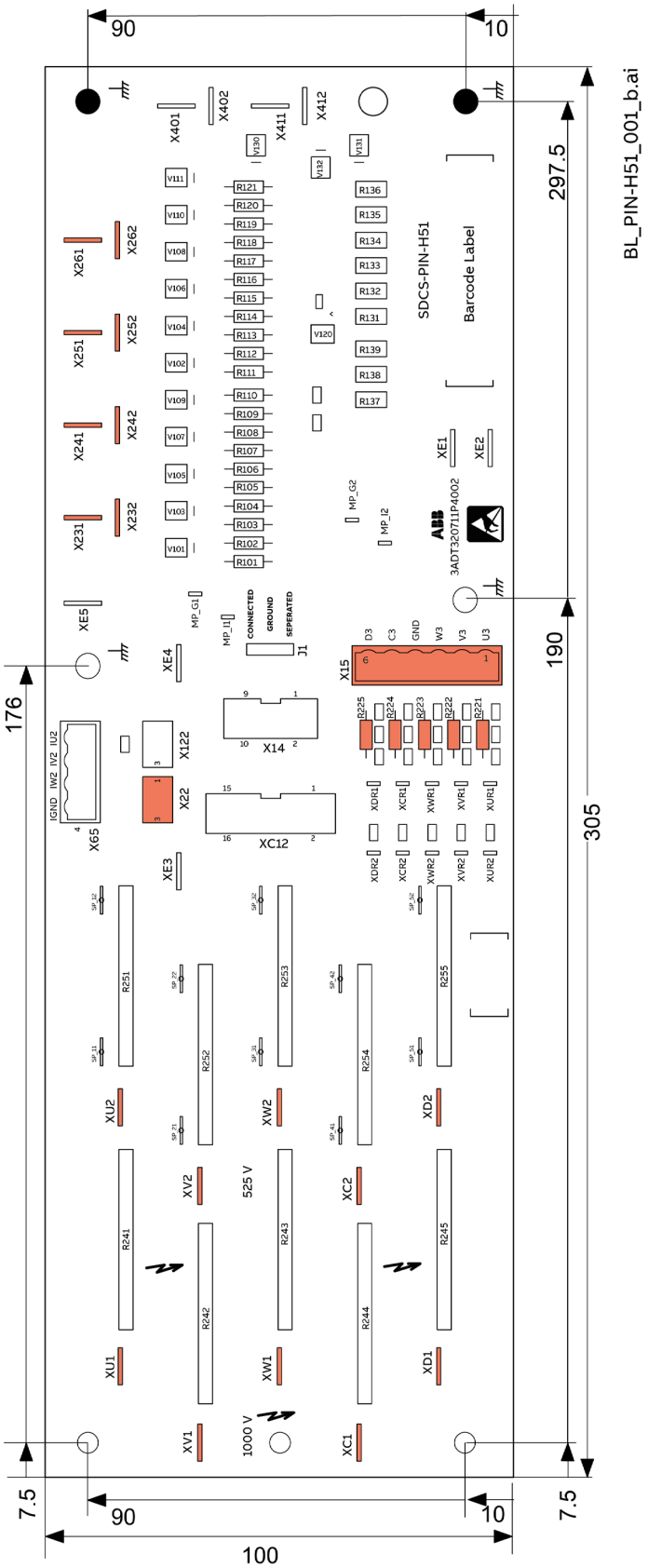

Measurement of the mains voltage, output voltage and output current (CTs)

Voltage and current measurement are used to supervise the load. This includes among other things:

- Monitoring the load.
- Resistance calculation of the load.
- Aging of the load.
- Fault detection e.g., overload.
- Detection of eddy currents in the transformer e.g., in multitap configurations.

To measure the mains voltage, output voltage and output current 2 SDCS-PIN-H51 are used.

- SDCS-PIN-H51 with location code -A42 is measuring the mains voltage including the neutral, if available. It is connected to the SDCS-CON-H01 via XC12.
- SDCS-PIN-H51 with location code -A43 is measuring the output voltage including the neutral, if available, and the output current via an SDCS-CMI-H02. It is connected to the SDCS-CON-H01 via X14. The second SDCS-PIN-H51 can also measure the output voltage and output current externally. The decision to use external voltage and current measurement depends on the type of load. The load types can be divided into loads with and loads without transformers.
  1. Loads without transformers do not need external measurement devices. The output current of each leg is measured by means of internal CTs. The output voltage is calculated using the measured mains voltage, the firing angle alpha, the measured output current, and the known load configuration.
  2. Loads with transformers need external measurement devices in case accurate load monitoring on the secondary side of the transformer is desired.

Note: For power calculation, external measurement devices are not needed since the power on the primary side and secondary of a transformer is the same. Except of course for power loss calculation of the transformer itself.

Mains voltage measurement via SDCS-PIN-H51 with location code -A42

XD1	Mains voltage measurement for phase V1.
XU1	Mains voltage measurement for phase U1.
XV1	Neutral of the mains voltage (N1), if available.
XW1	Mains voltage measurement for phase W1.
	See 99.04 Supply Configuration and 99.60 Voltage Measurement Configuration.

Output voltage measurement via SDCS-PIN-H51 with location code -A43

XD1	Output voltage measurement for phase V2.
XU1	Output voltage measurement for phase U2.
XV1	Neutral of the load (N2), if available.
XW1	Output voltage measurement for phase W2.
	See 99.60 Voltage Measurement Configuration.

Current measurement (X65) via SDCS-PIN-H51 with location code -A43

IU2	Current measurement (CT) for phase U2. Interface board SDCS-CMI-H02 is required and built in as standard.
IV2	Current measurement (CT) for phase V2. Interface board SDCS-CMI-H02 is required and built in as standard.
IW2	Current measurement (CT) for phase W2. Interface board SDCS-CMI-H02 is required and built in as standard.
	See 99.70 Current Measurement Configuration.

External output voltage measurement via SDCS-PIN-H51 with location code -A43

XD1	External output voltage measurement for phase V2. Maximum wire size 2.5 mm^2. Cable insulation must withstand the mains voltage.
XU1	External output voltage measurement for phase U2. Maximum wire size 2.5 mm^2. Cable insulation must withstand the mains voltage.
XV1	Neutral of the load (N2), if available. Maximum wire size 2.5 mm^2. Cable insulation must withstand the mains voltage.
XW1	External output voltage measurement for phase W2. Maximum wire size 2.5 mm^2. Cable insulation must withstand the mains voltage.
	Activation, see 99.60 Voltage Measurement Configuration.

External current measurement (X65) via SDCS-PIN-H51 with location code -A43

IU2	External current measurement (CT) for phase U2. Maximum wire size 2.5 mm^2. Interface board SDCS-CMI-H02 is required.
IV2	External current measurement (CT) for phase V2. Maximum wire size 2.5 mm^2. Interface board SDCS-CMI-H02 is required.
IW2	External current measurement (CT) for phase W2. Maximum wire size 2.5 mm^2. Interface board SDCS-CMI-H02 is required.
	Activation, see 99.70 Current Measurement Configuration.

Firing pulse transformer board SDCS-PIN-H41 (T6 standard and T8)

The interface to the power part of the units size T6 standard and T8 from 1300 A … 4200 A consists of one firing pulse transformer boards SDCS-PIN-H41.

Location of the SDCS-PIN-H41

Size T6 standard and T8:

– The board is located inside the unit.

Layout of the SDCS-PIN-H41

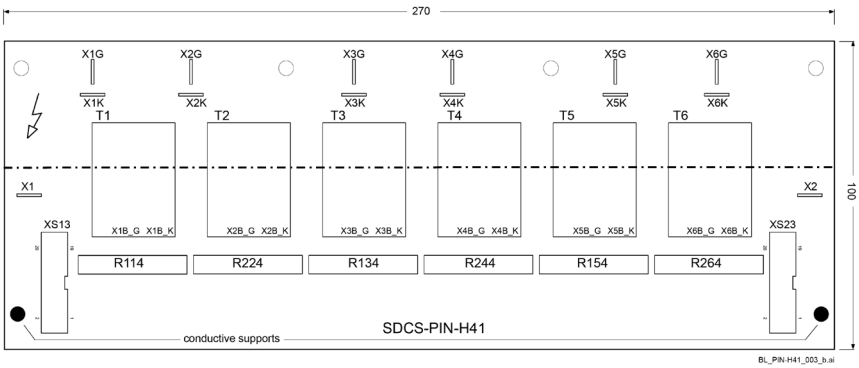

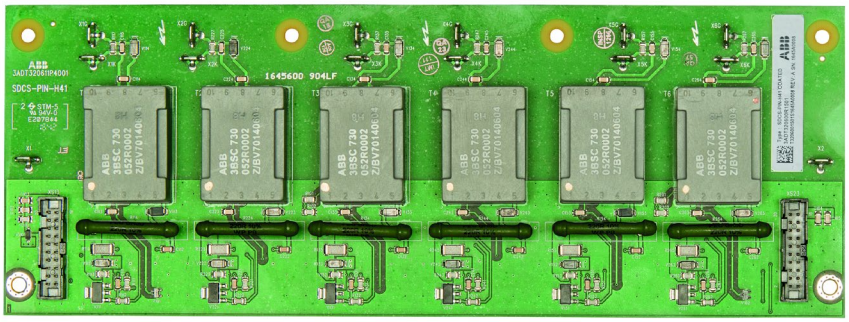

The board consists of six firing pulse transformers with amplifiers.

Optical power link board SDCS-OPL-H01 (T8)

Units size T8 consist of a control unit and a power unit. The board provides the interface between control unit and power unit using fiber optic cables.

Following connectors are available

Fiber optic connectors V1, V2 connect the SDCS-CON-H01 via SDCS-DSL-H12 for control.
Fiber optic connectors V11, V12 connect the SDCS-CON-H01 via SDCD-DSL-H12 for Safe Torque Off (STO).
WARNING
The STO must not be used for thyristor power controllers. It is not offering any certified safety functionality.
Maximum length of the plastic optic fiber cable is 5 m.
Connector X4 is not in use for DCT880.

X4	Current measurement	
1	IACT	Not in use for DCT880.
2	-	-
3	-	-
4	GND1	Not in use for DCT880.

SA_880_013_OPL_c.ai

Connector XC12 connects the SDCS-PIN-H51 with location code -A42.
Connector XS13 connects the SDCS-PIN-H41.
Connector X14 connects the SDCS-PIN-H51 with location code -A43.
Connector X38 connects the SDCS-POW-H01.
Connector XSMC (X96) connects the mains connector and must be used. XSMC on the control unit is not allowed.

XSMC	(X96) Mains contactor			
1	MCCOM		250 V_{AC} / 30 V_{DC}	Fixed output for the mains contactor
2	MCNO		2 A	
3	STOCOM		250 V_{AC} / 30 V_{DC}	Fixed output for safe torque off (STO) zero current monitor
4	STONO		2 A	

SA_880_013_OPL_c.ai

XSMC: Mains contactor

MCCOM MCNO	Fixed output for the mains contactor. 250 V_{AC}/30 V_{DC}, 2 A. Maximum wire size 2.5 mm^2. Varistor protected. **Note:** It is also possible to use one of the relay outputs. Examples see chapter Wiring.
STOCOM STONO	Not in use for DCT880. **WARNING** The XSTO terminals must not be used for thyristor power controllers. They are not offering any certified safety functionality.
	Mains contactor ON command: E.g., 06.14 Leg 1 Status Word bit 11 = high.

Location of the SDCS-OPL-H01

The board is located inside the power unit.

Layout of the SDCS-OPL-H01

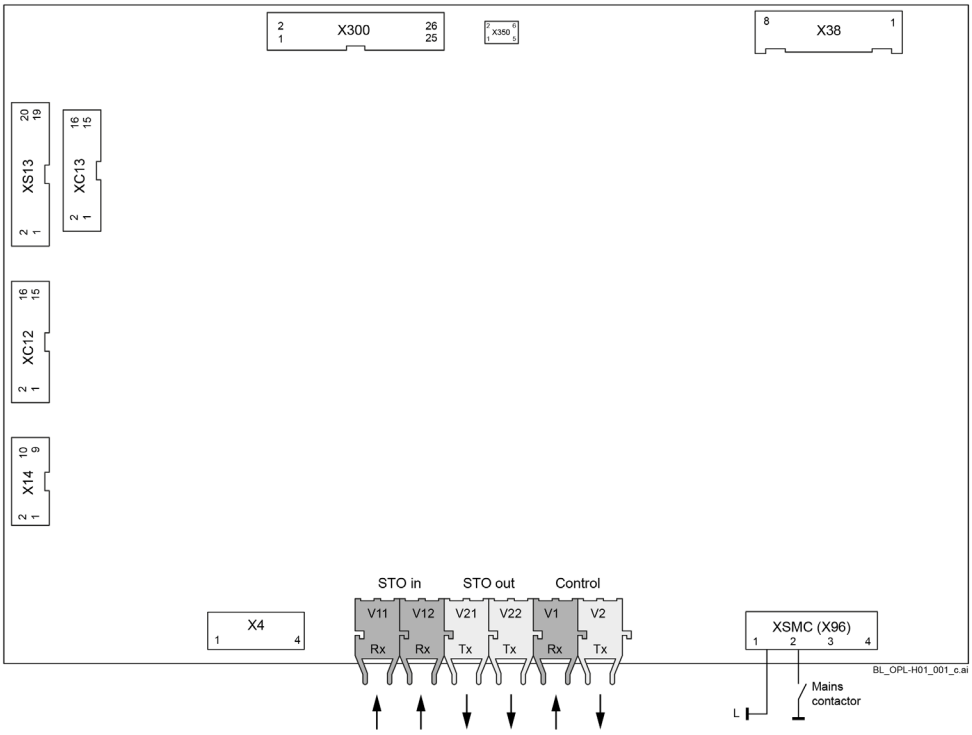

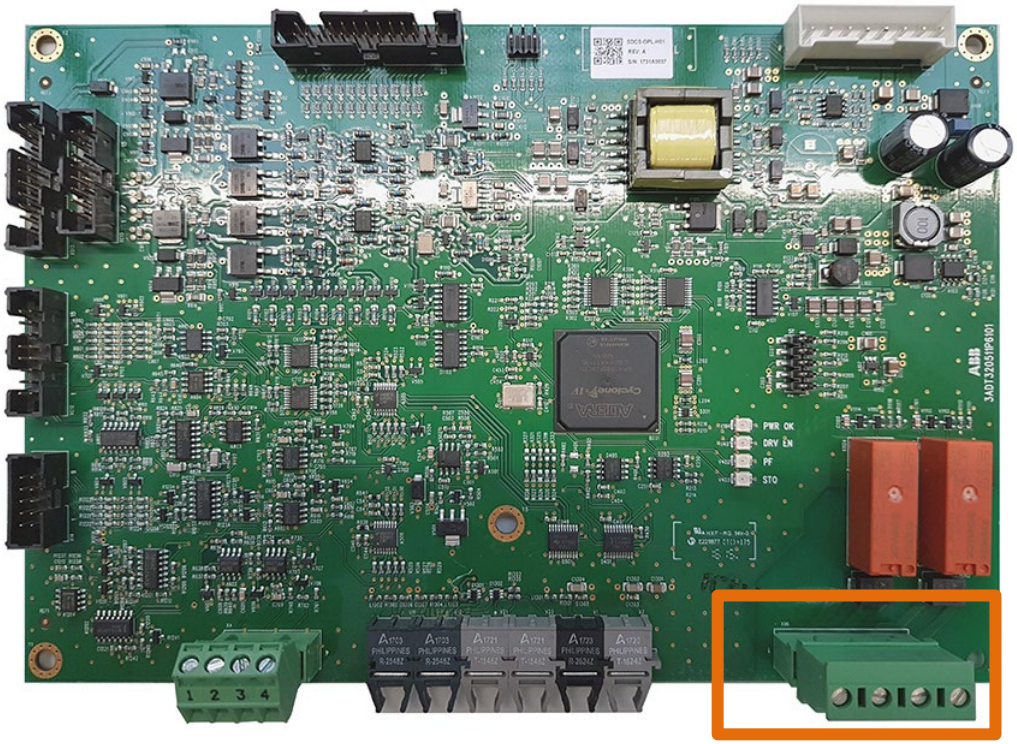

Mains contactor

Connecting control unit and power unit (T8)

During installation the control unit needs to be connected with the power unit using fiber optic cables. Connect the fiber optic cables from the SDCS-DSL-H12 (control unit) to the SDCS-OPL-H01 (power unit). The mains contactor is controlled via XSMC (X96:1 and X96:2) on the SDCS-OPL-H01 located in the power unit. Connect according to the drawing below:

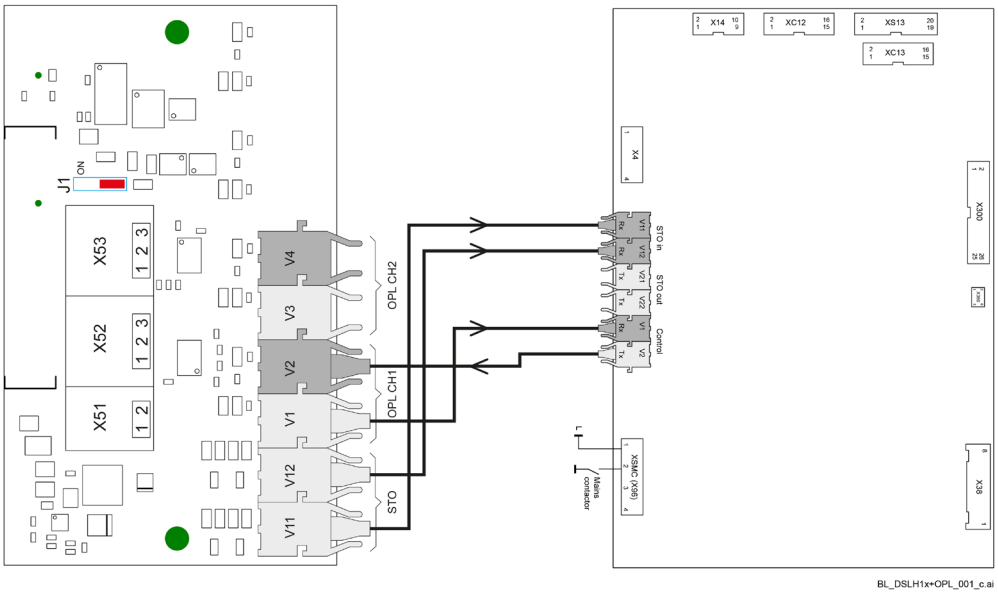

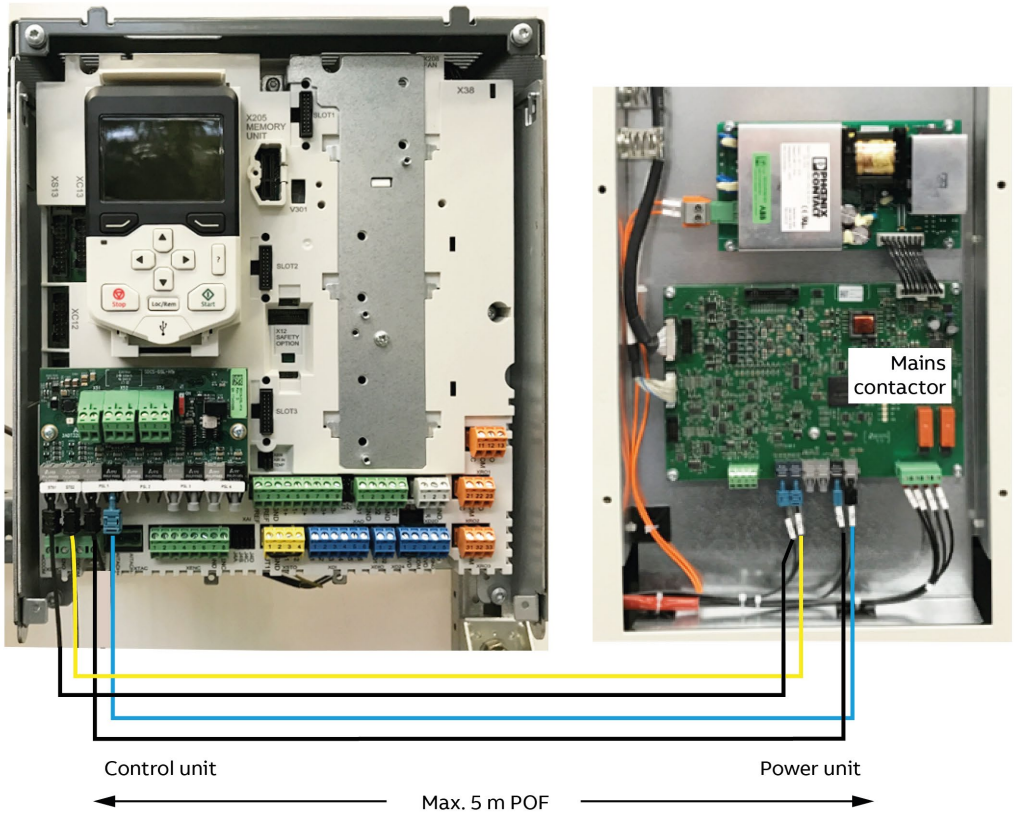

Interface board SDCS-CMI-H02, current measurement

The SDCS-CMI-H02 is used for the internal and external current measurement.

- Units size T1 … T5 and T6 special design: SDCS-CMI-H02 via XEXCT (X65) on the SDCS-PIN-H11.
- Units size T6 standard and T8: SDCS-CMI-H02 via X65 on the SDCS-PIN-H51 with location code -A43.

SDCS-CMI-H02 via XEXCT (X65) on the SDCS-PIN-H11

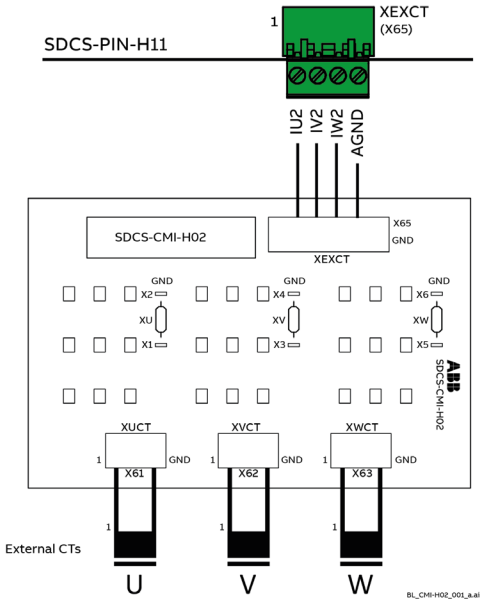

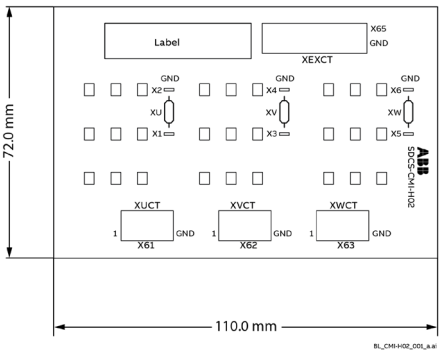

Attention: To measure the current and thus, the correct power, make sure the CTs direction is proper. The measured current is displayed in signals 01.30 Leg 1 Current RMS actual ... 01.35 Leg 3 Current RMS relative actual.

Notes:

- The SDCS-CMI-H02 is external for units size T1 … T5. Thus, it is optional.
- The SDCS-CMI-H02 is internal (built in) for units size T6 special design. Thus, it is standard.

As standard the board is equipped with 1 Ohm burden resistors. Here leg 1 is shown:

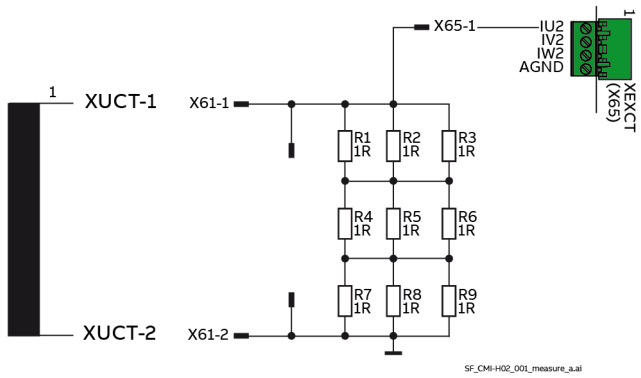

For units size T6 special design the current scaling must set by means of 95.18 Set: Unit output current scaling. The setting of 95.18 Set: Unit output current scaling equals 1 V over the burden resistor.

Example: The CT in units size T6 special design e.g., is 2500:1.

With a burden resistor of 1 ohm a current of 1 A generates 1 V (ohms law). Thus, 95.18 Set: Unit output current scaling must be set to 2500 A.

In case the standard burden resistor of 1 ohm is not applicable use X1:1 and X2:1 to adapt the burden resistor.

SDCS-CMI-H02 via X65 on the SDCS-PIN-H51 with location code -A43

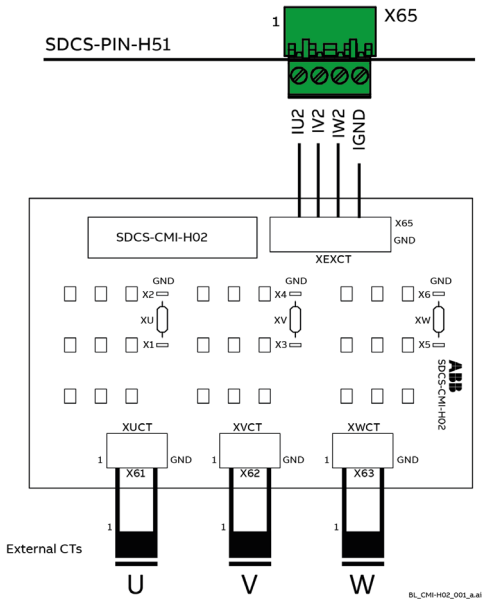

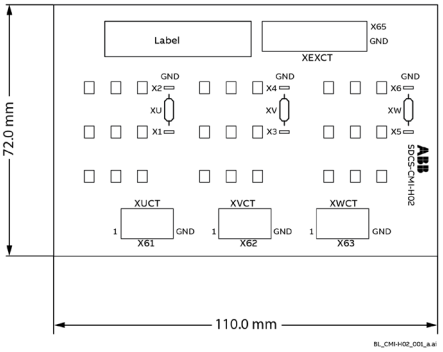

Attention: To measure the current and thus, the correct power, make sure the CTs direction is proper. The measured current is displayed in signals 01.30 Leg 1 Current RMS actual ... 01.35 Leg 3 Current RMS relative actual.

Notes:

– The SDCS-CMI-H02 is internal (built in) for units size T6 standard and T8. Thus, it is standard.

As standard the board is equipped with 1 Ohm burden resistors. Here leg 1 is shown:

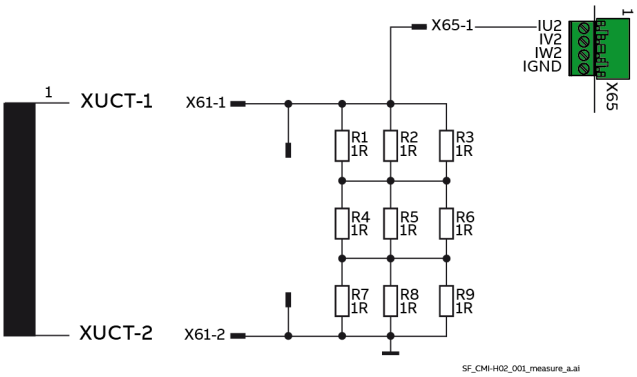

For units size T6 standard and T8 the current scaling is automatically set by the type code, see 95.16 Set: Unit type code.

In case the standard burden resistor of 1 ohm is not applicable use X1:1 and X2:1 to adapt the burden resistor.

Circuit diagrams (T1 ... T5)

Typical circuit diagram for unit sizes T1 ... T5 with three legs (W03):

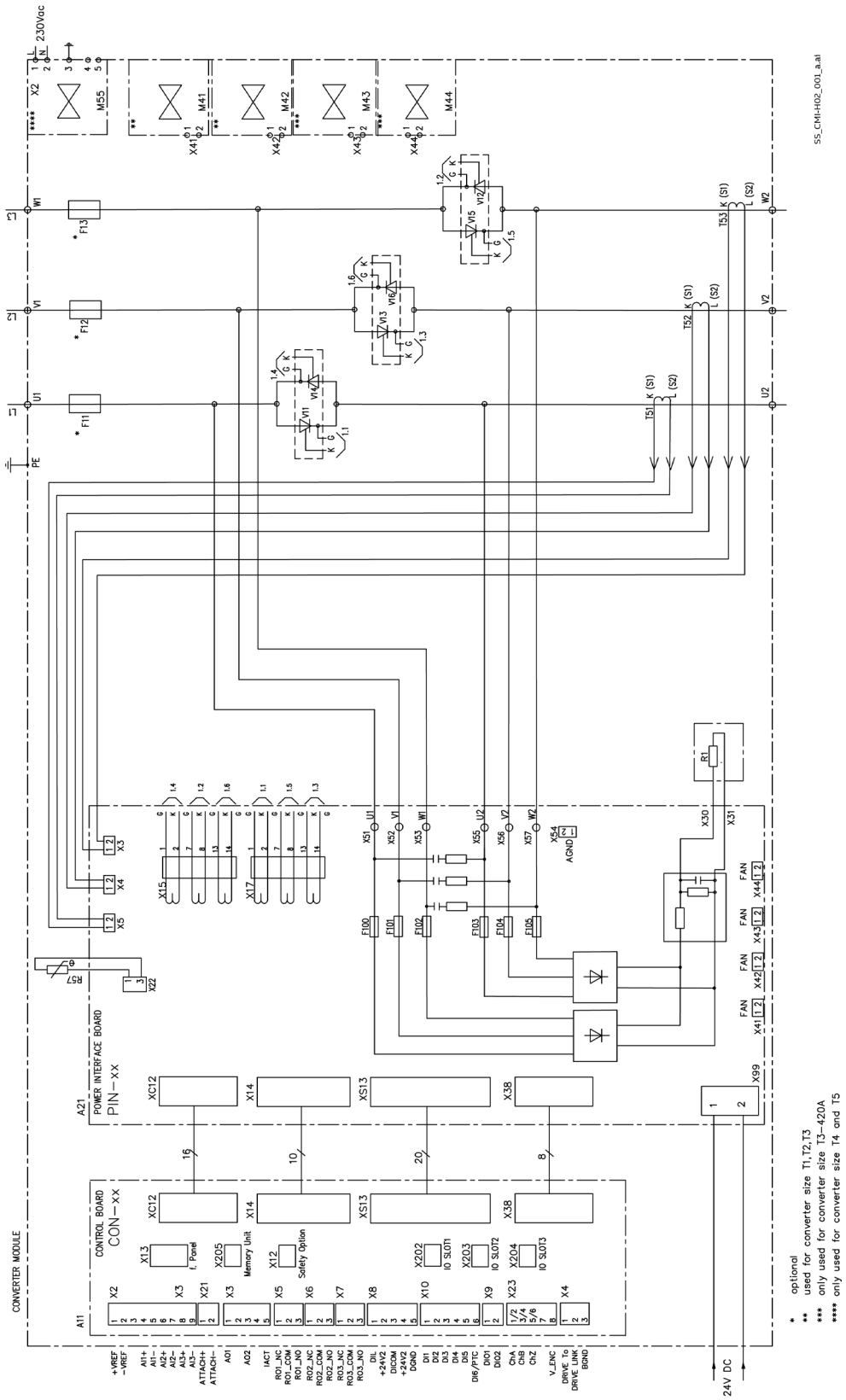

Typical circuit diagram for unit sizes T1 … T5 with two legs (W02):

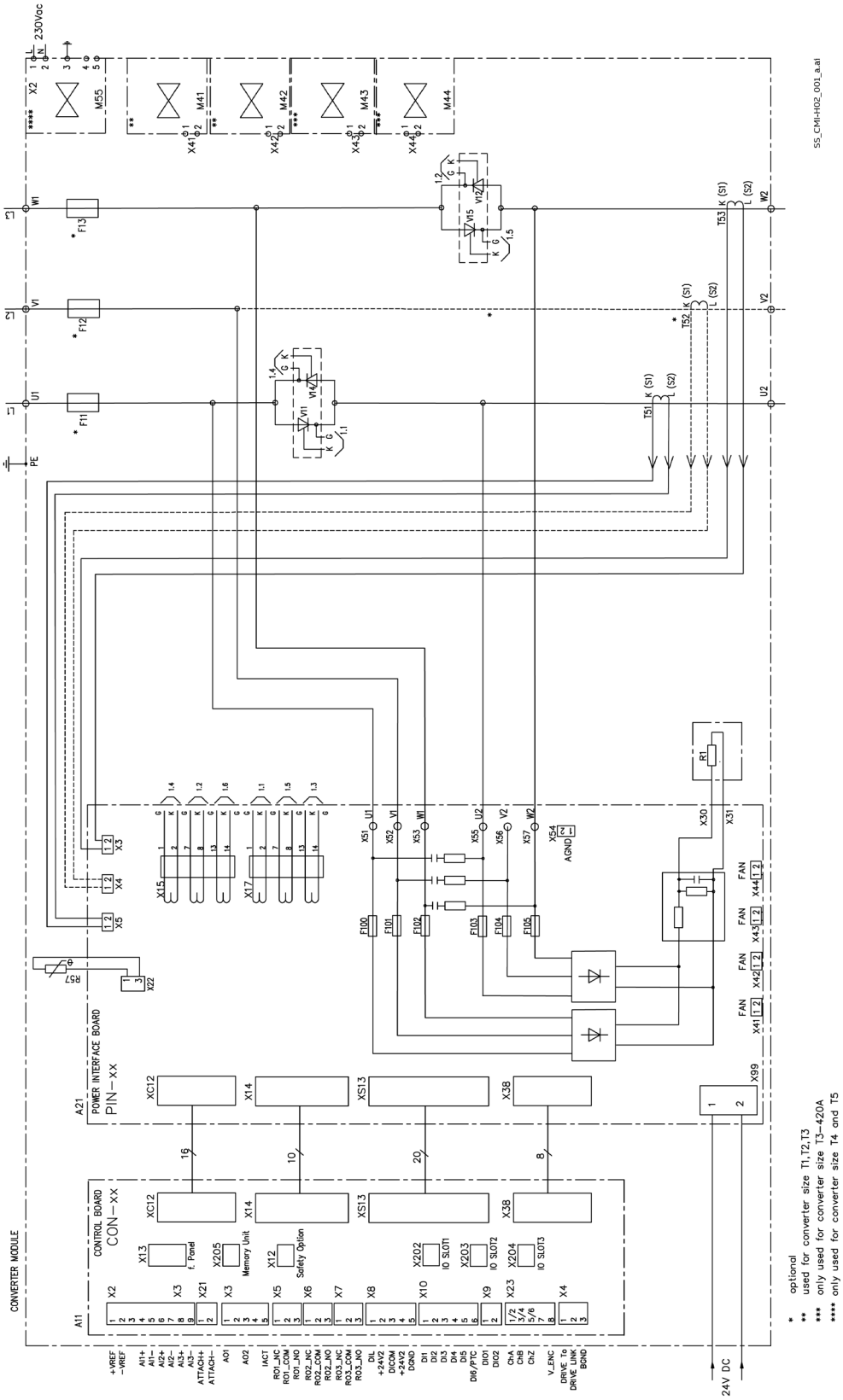

Circuit diagram T6 special design

Units size DCT880-W03-1300/1750-04/05/07XS/XT

The DCT880 size T6 special design utilizes following printed circuit boards:

- SDCS-CON-H01.
- SDCS-PIN-H11A.
- SDCS-CMI-H02.
- SDCS-REB-H11.
- SDCS-PIN-46.

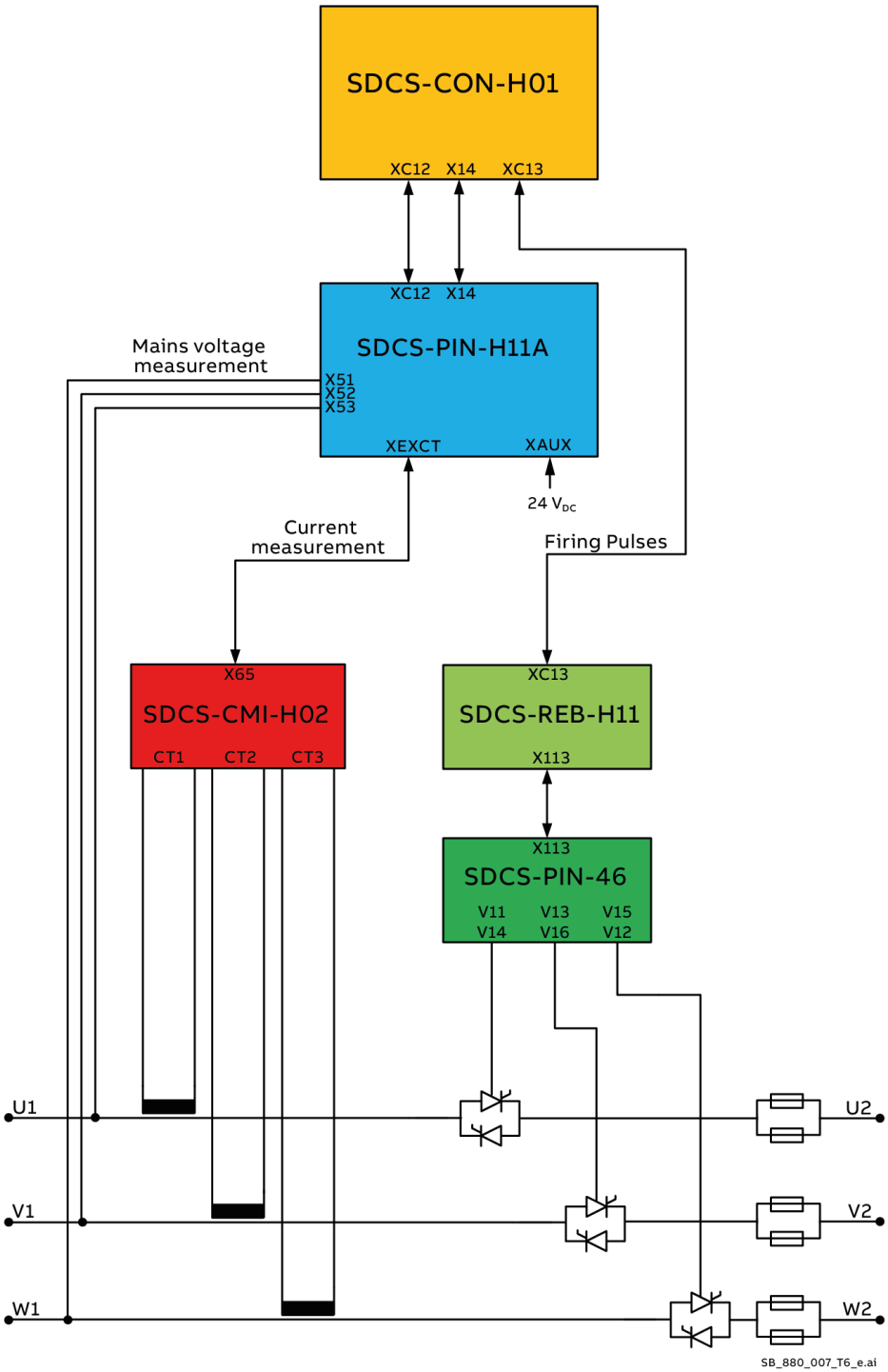

Typical circuit diagram for all units size T6 special design (DCT880-W03-1300/1750-04/05/07**XS/XT**) with three legs:

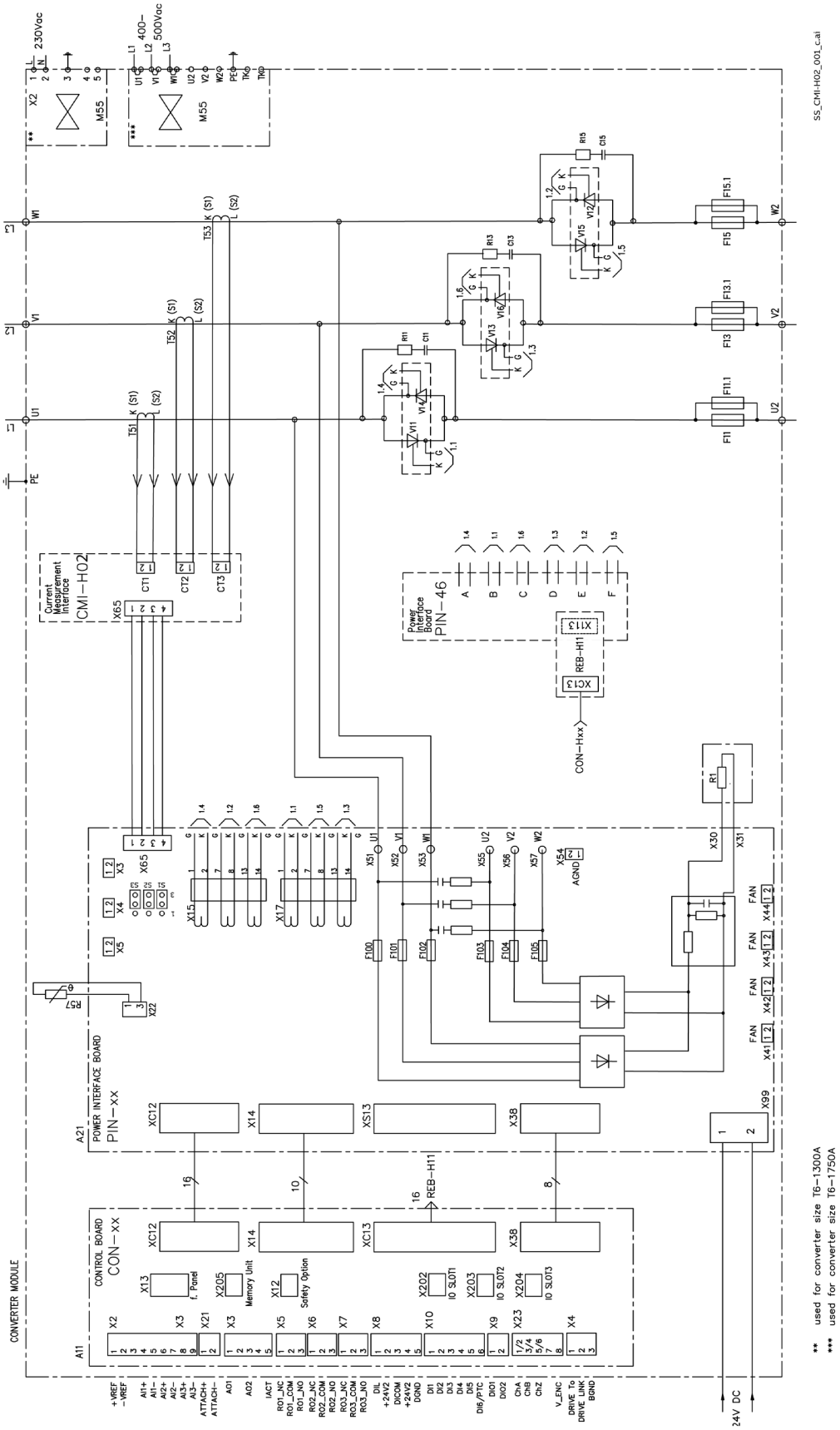

Typical circuit diagram for units size T6 special design (DCT880-W02-1300/1750-04/05/07**XS/XT**) with two legs:

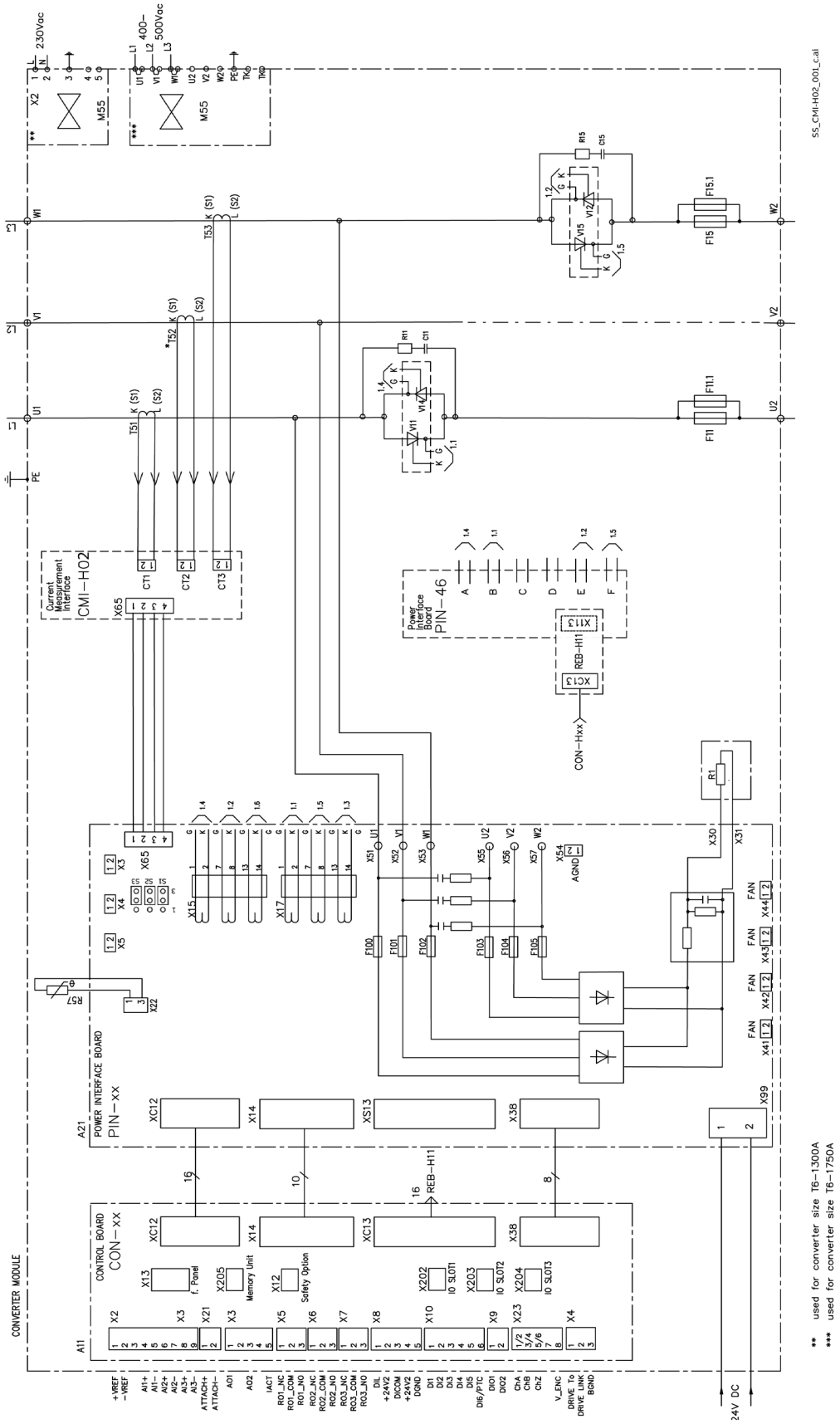

Circuit diagram T6 standard

Units size DCT880-W03-1300/1750-04/05X0

The DCT880 size T6 standard utilizes following printed circuit boards:

- SDCS-CON-H01.
- SDCS-POW-H01.
- 2 x SDCS-PIN-H51.
- SDCS-CMI-H02.
- SDCS-PIN-H41.

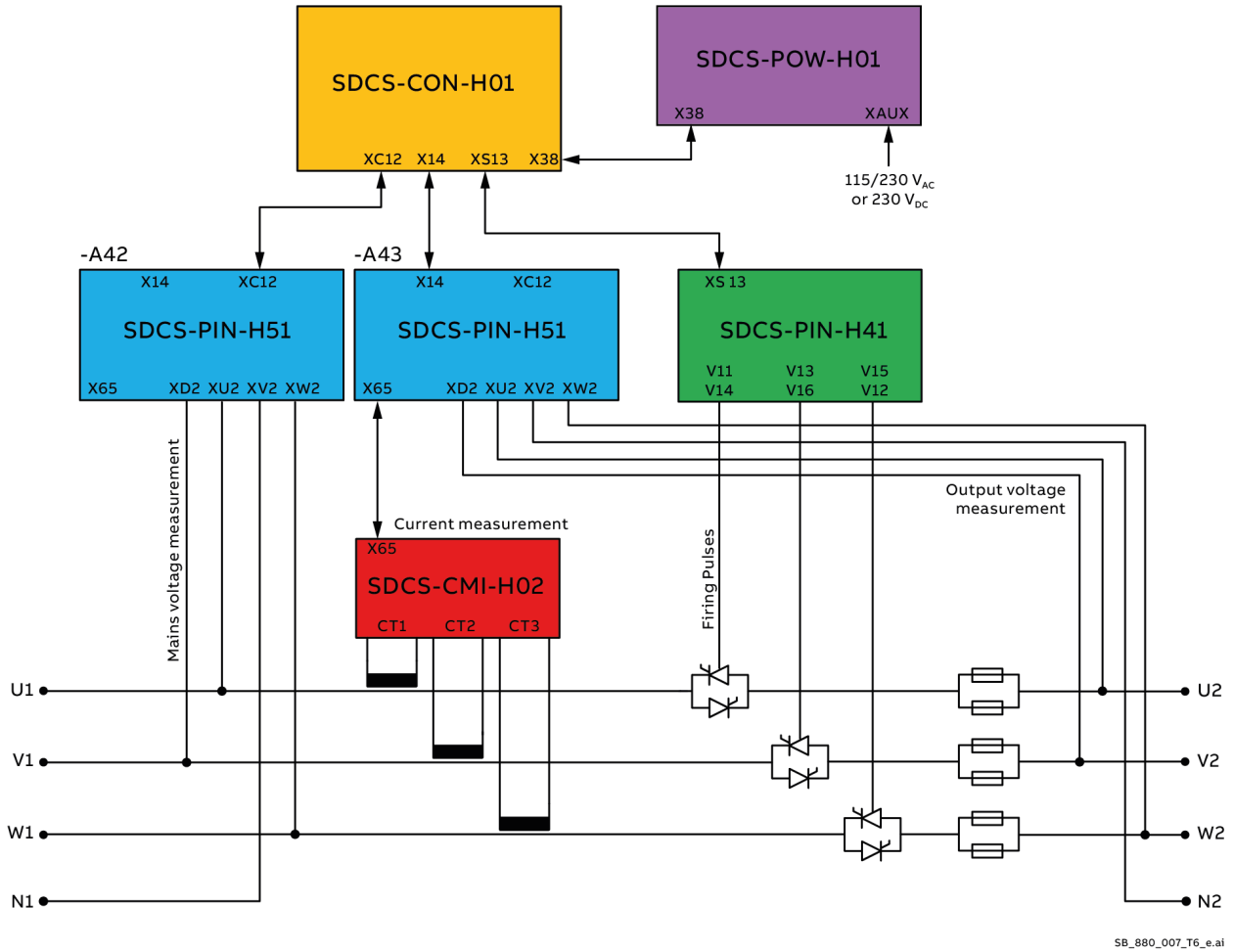

Typical circuit diagram for units size T6 standard (DCT880-W03-1300/1750-04/05**X0**) with three legs:

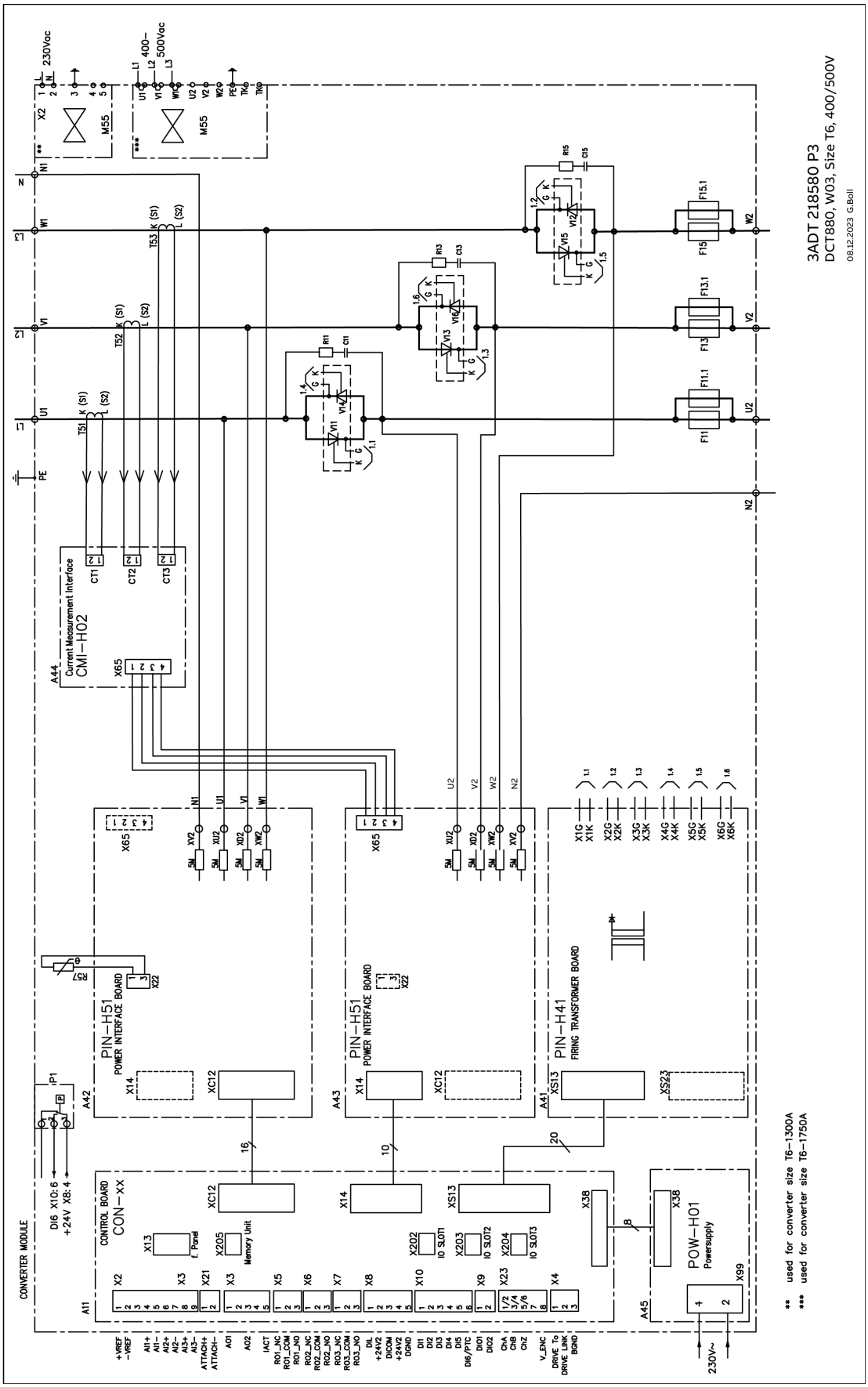

Typical circuit diagram for units size T6 standard (DCT880-W02-1300/1750-04/05**X0**) with two legs:

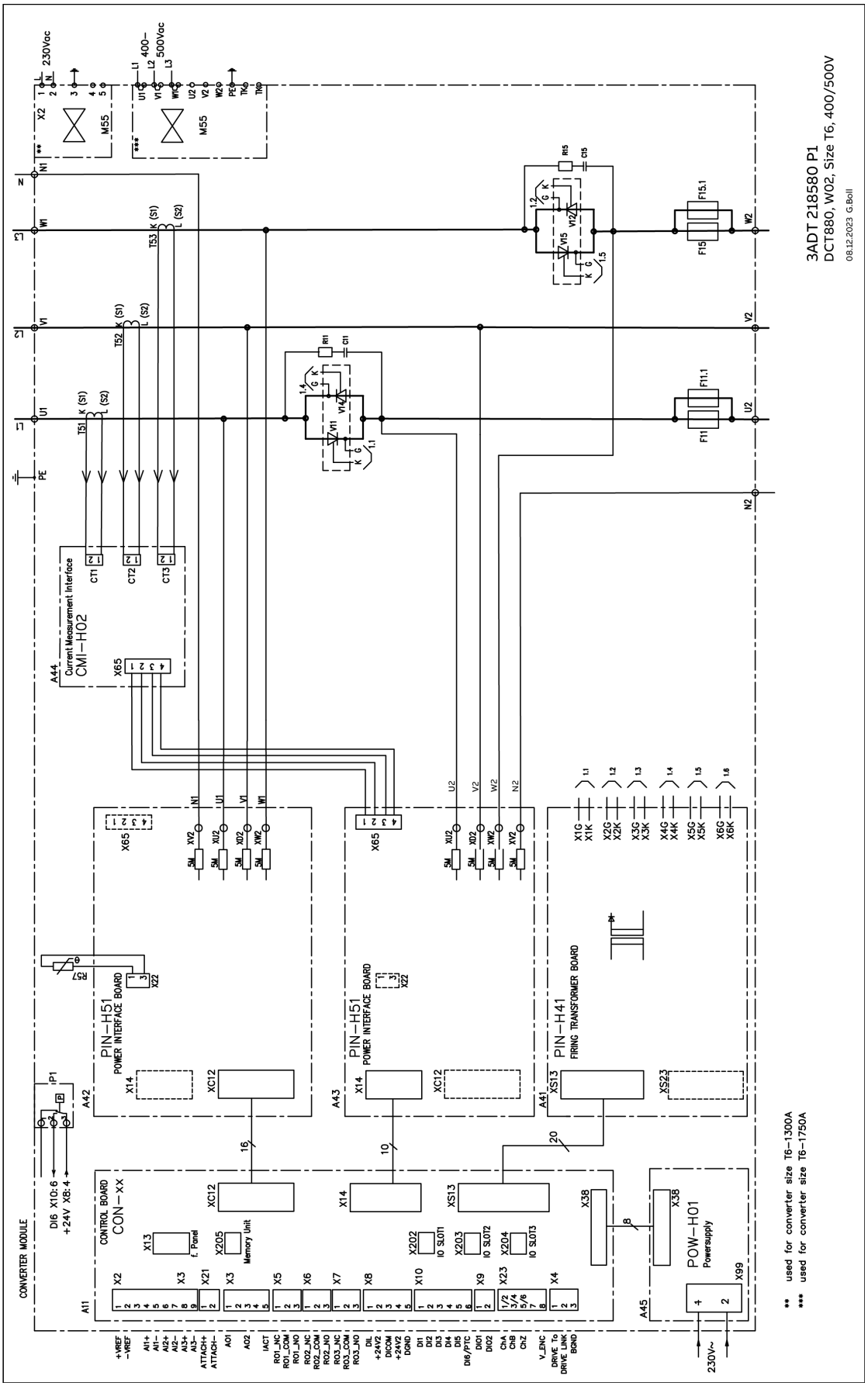

Units size DCT880-W03-1300/1750-07/08X0

The DCT880 size T6 standard utilizes following printed circuit boards:

- SDCS-CON-H01.
- SDCS-POW-H01.
- 2 x SDCS-PIN-H51.
- SDCS-CMI-H02.
- SDCS-PIN-H41.

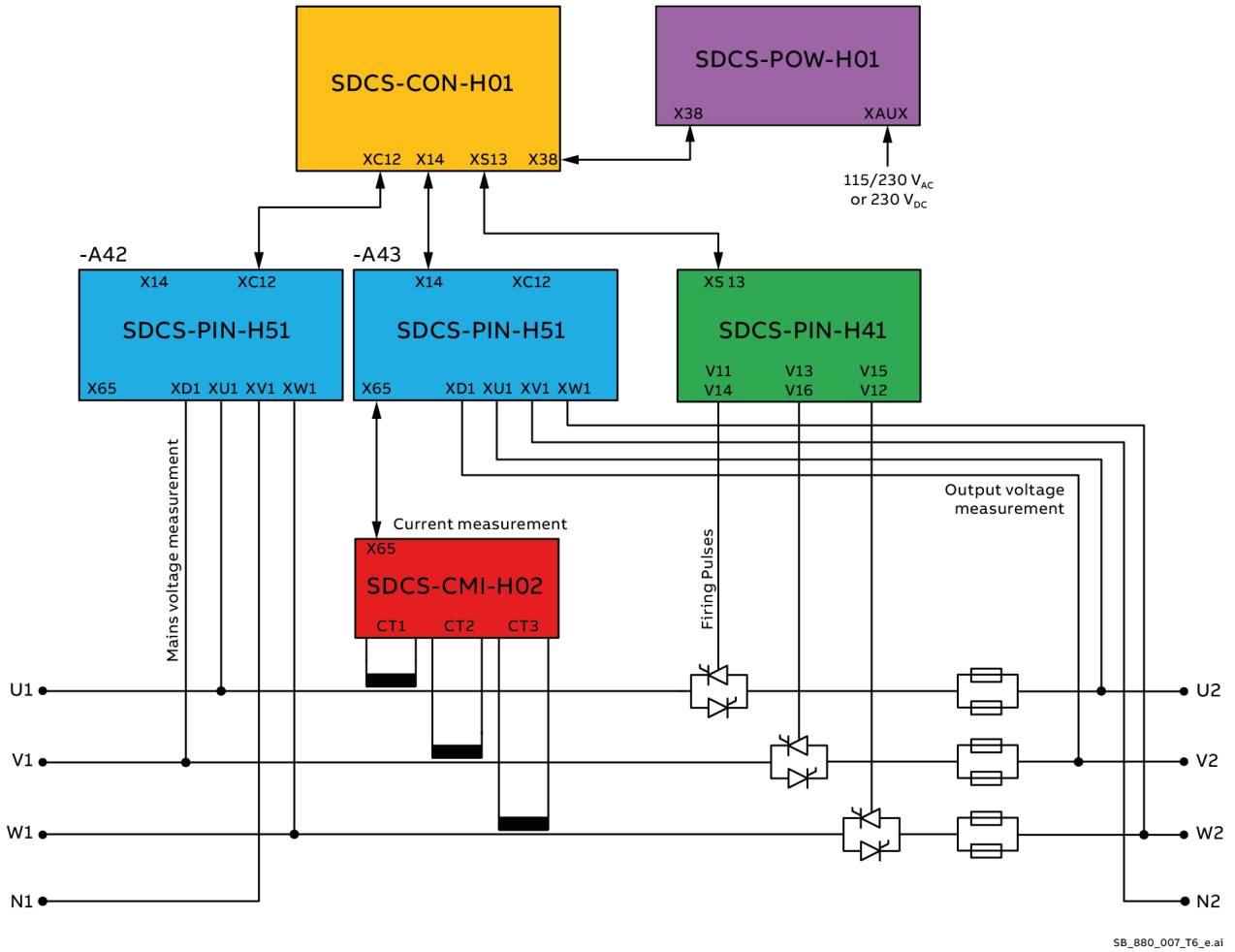

Typical circuit diagram for units size T6 standard (DCT880-W03-1300/1750-07/08**X0**) with three legs:

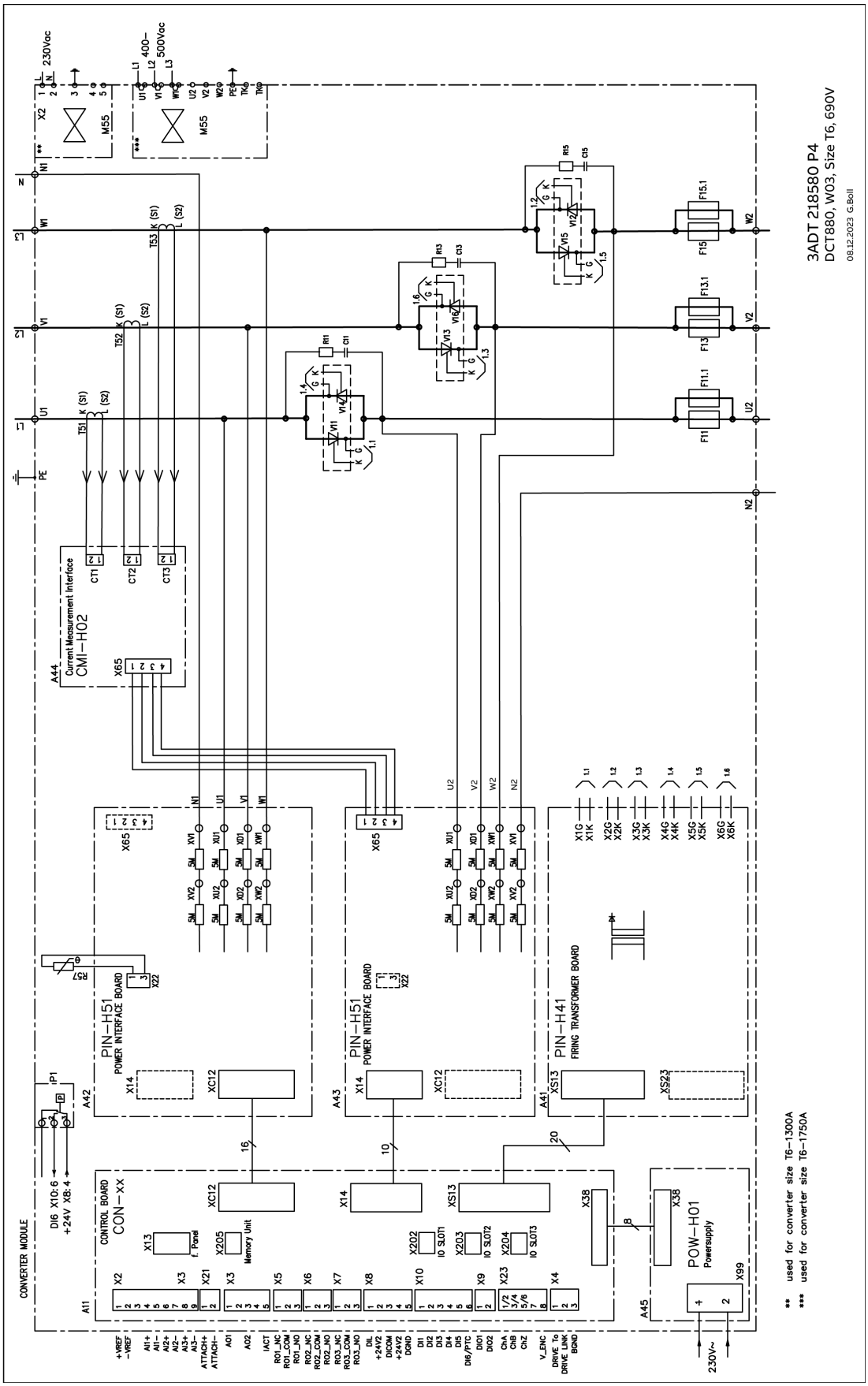

Typical circuit diagram for units size T6 standard (DCT880-W02-1300/1750-07/08**X0**) with two legs:

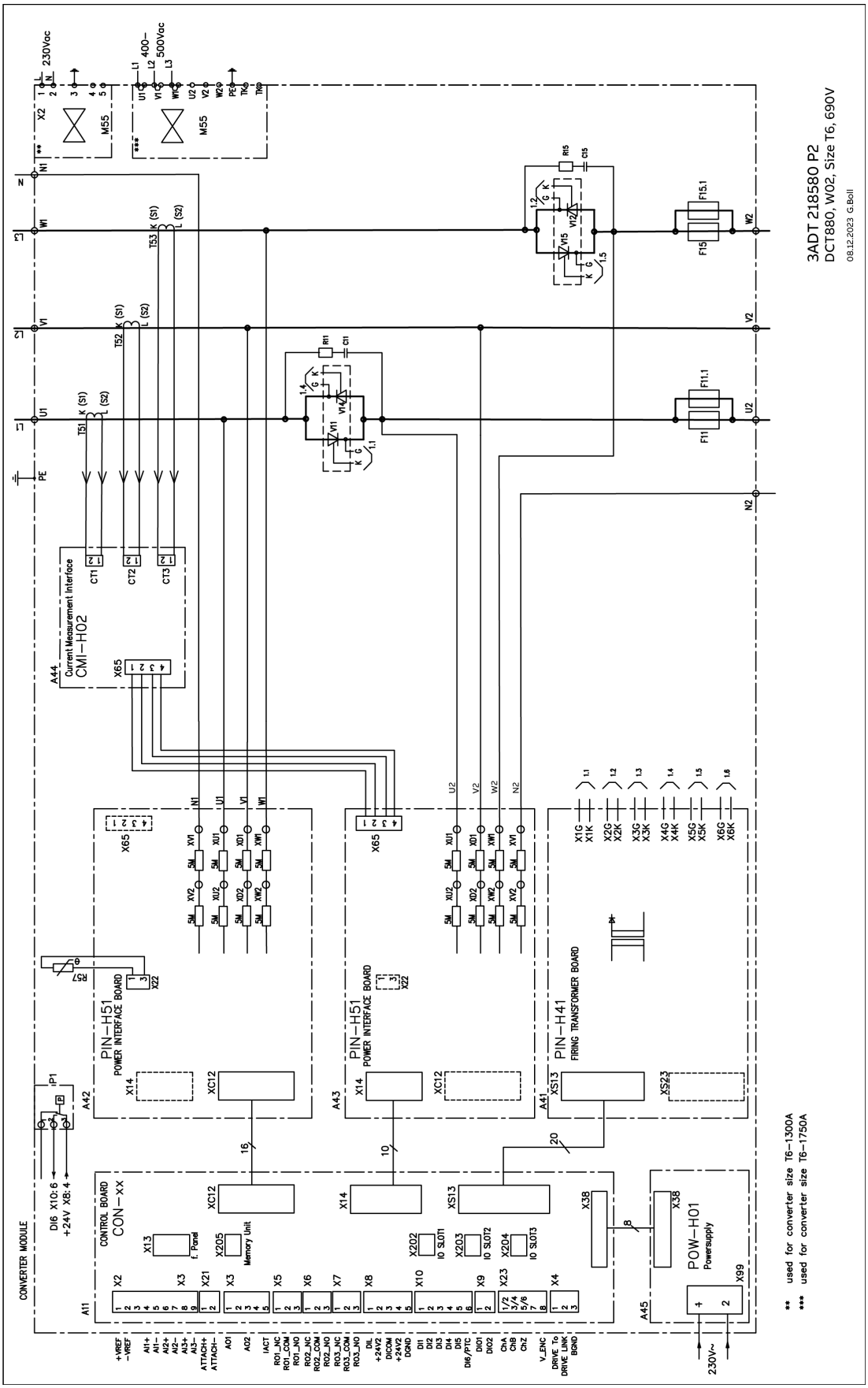

Circuit diagram T8

Unite size DCT880-W03-2100-04/05 … DCT880-W03-4200-04/05

The DCT880 size T8 utilizes following printed circuit boards:

- Control unit:
  - SDCS-CON-H01.
  - SDCS-POW-H01.
  - SDCS-DSL-H12.
- Power unit:
  - SDCS-OPL-H01.
  - SDCS-POW-H01.
  - 2 x SDCS-PIN-H51.
  - SDCS-CMI-H02.
  - SDCS-PIN-H41.

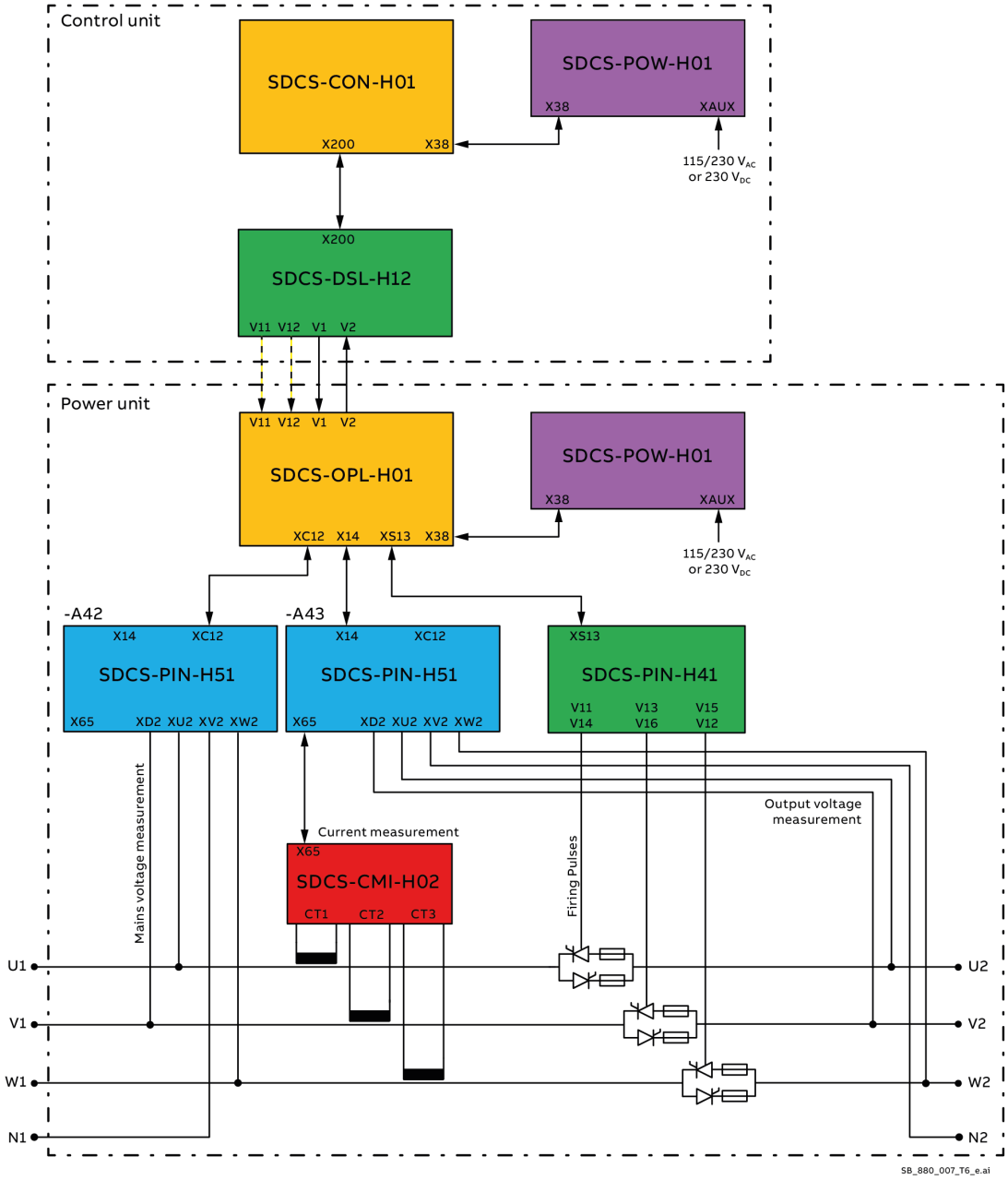

Typical circuit diagram for units size T8 (DCT880-W03-2100-04/05 … DCT880-W03-4200-04/05) with three legs:

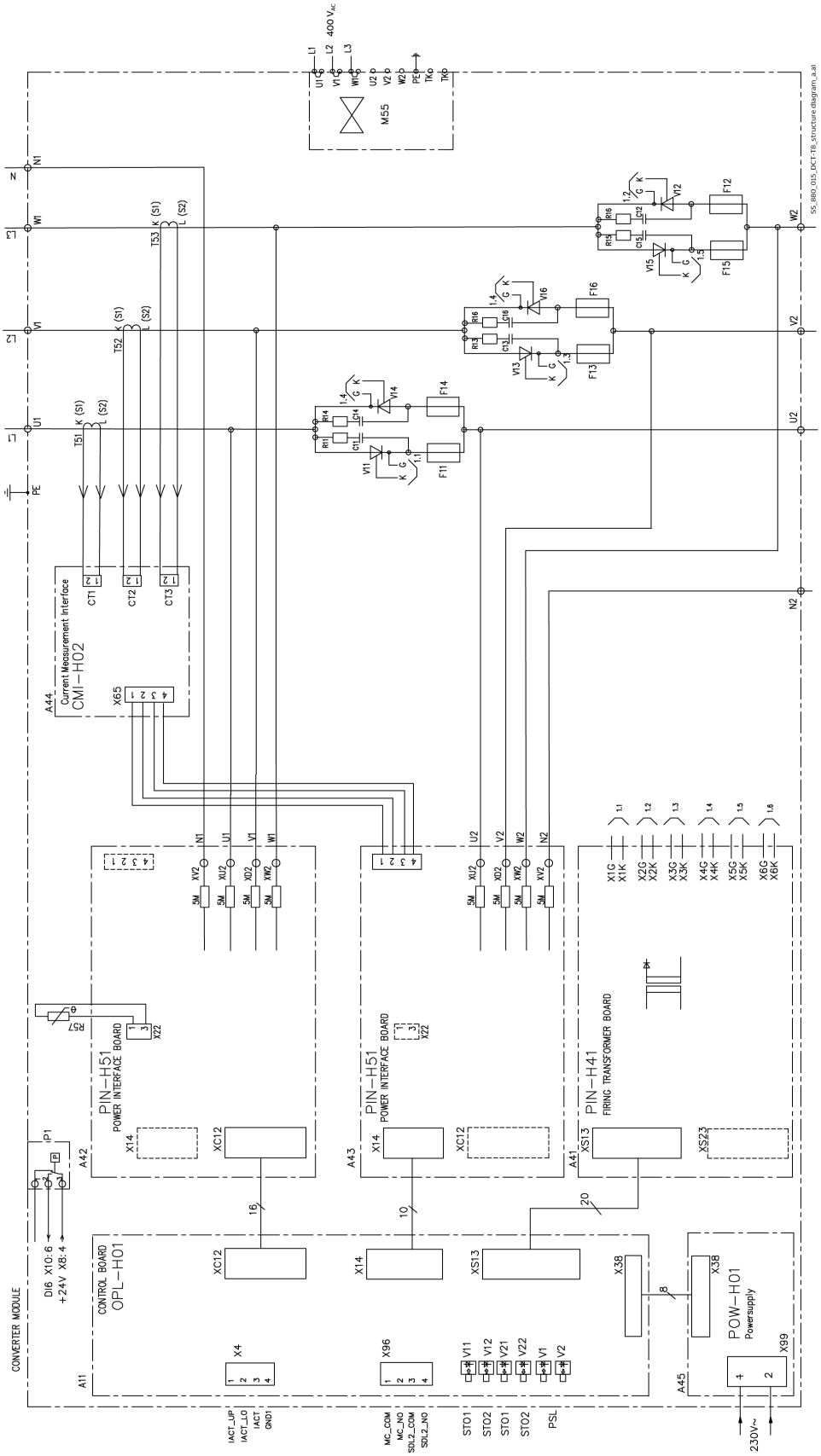

Units size DCT880-W03-2100-07/08/10 ... DCT880-W03-3900-07/08

The DCT880 size T8 utilizes following printed circuit boards:

- Control unit:
  - SDCS-CON-H01.
  - SDCS-POW-H01.
  - SDCS-DSL-H12.
- Power unit:
  - SDCS-OPL-H01.
  - SDCS-POW-H01.
  - 2 x SDCS-PIN-H51.
  - SDCS-CMI-H02.
  - SDCS-PIN-H41.

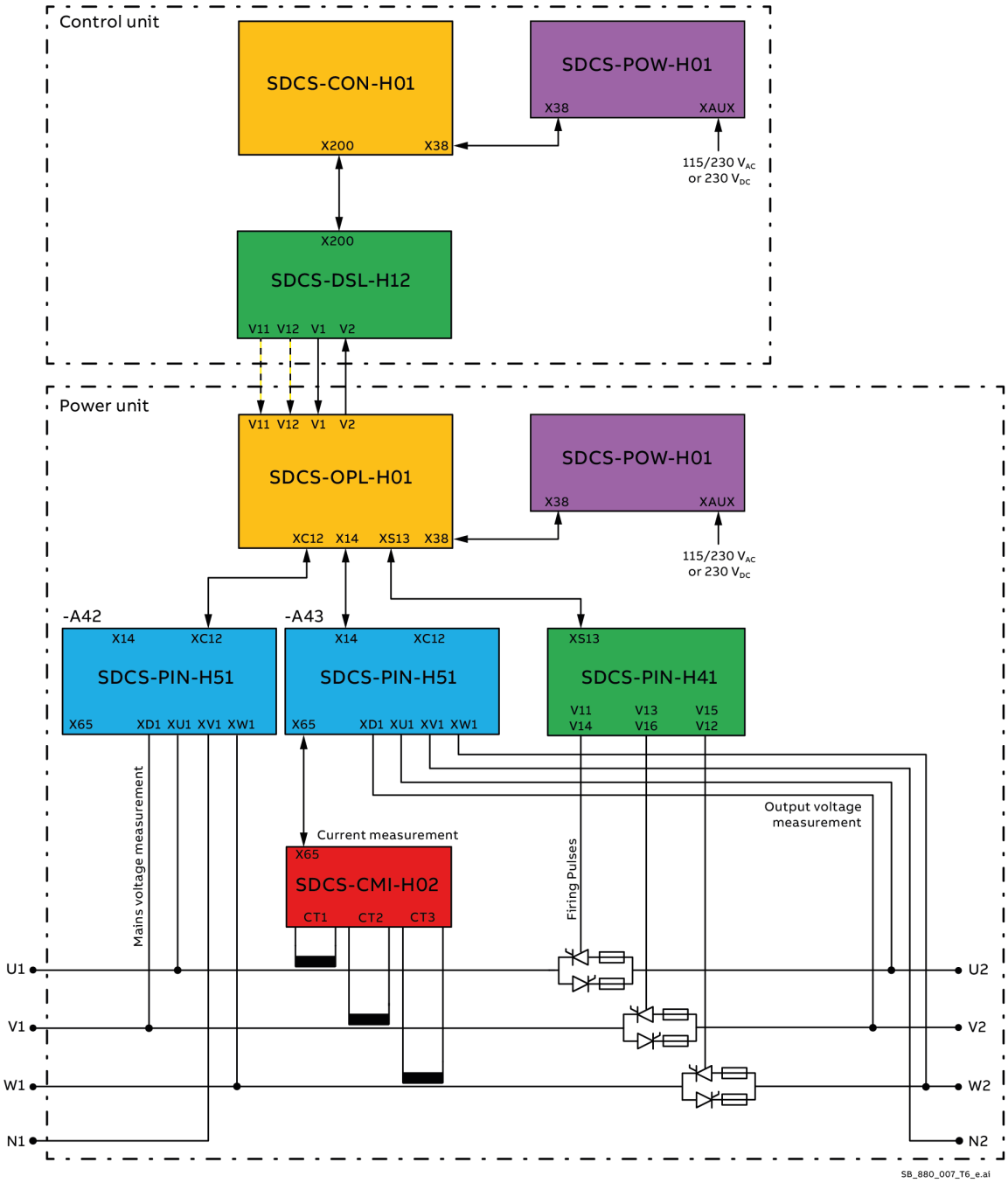

Typical circuit diagram for units size T8 (DCT880-W03-2100-07/08/10 … DCT880-W03-3900-07/08) with three legs:

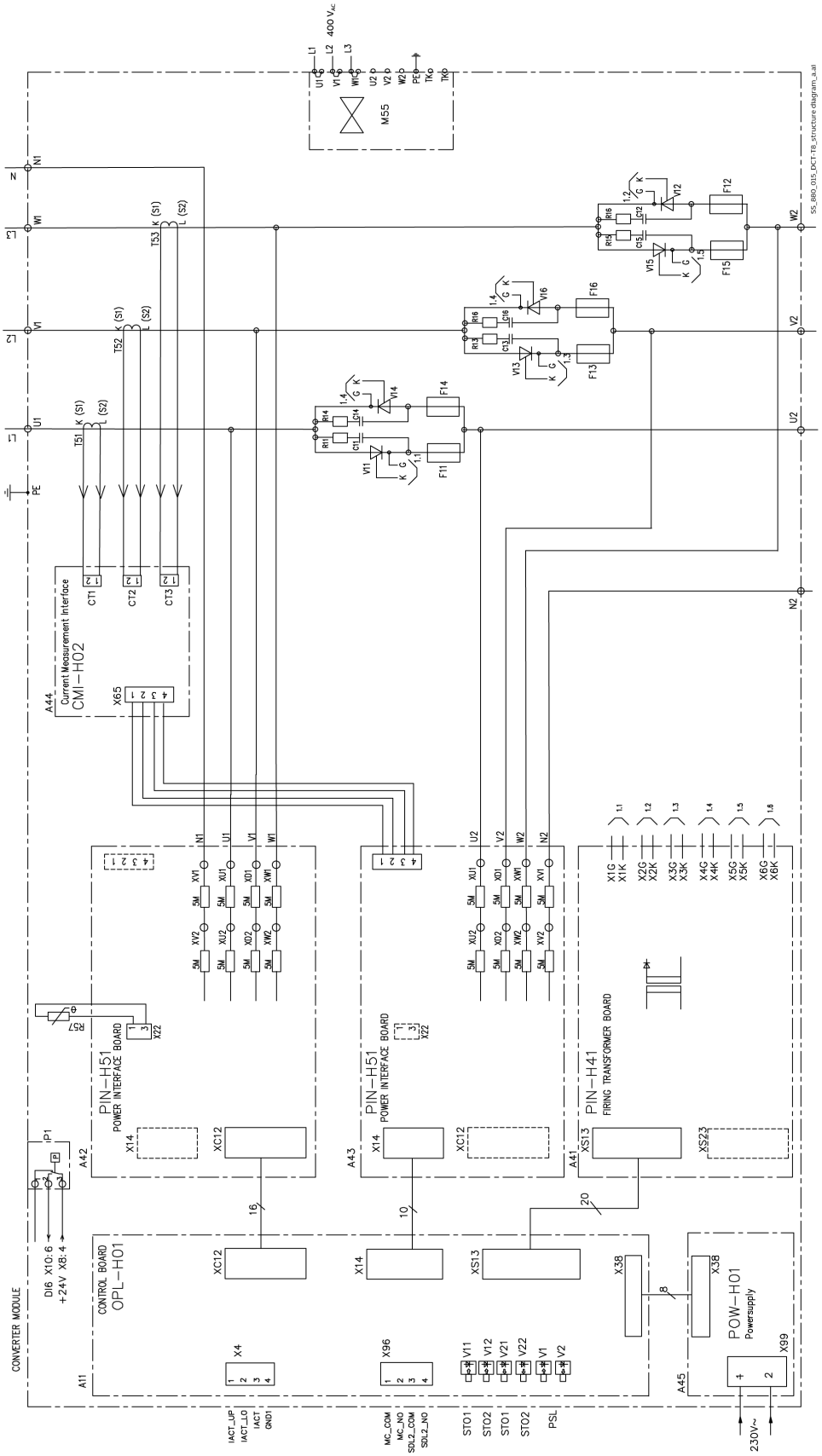

Circuit diagram T8 with fuse monitoring (+G420)

The internal fuses are equipped with micro-switches to detect blown fuses in the power unit. The micro-switches are connected in series and must be connected to one of the DIs on the SDCS-CON-H01 of the control unit. Connect that DI by means of parameters to an external event.

Example: Using DIL:

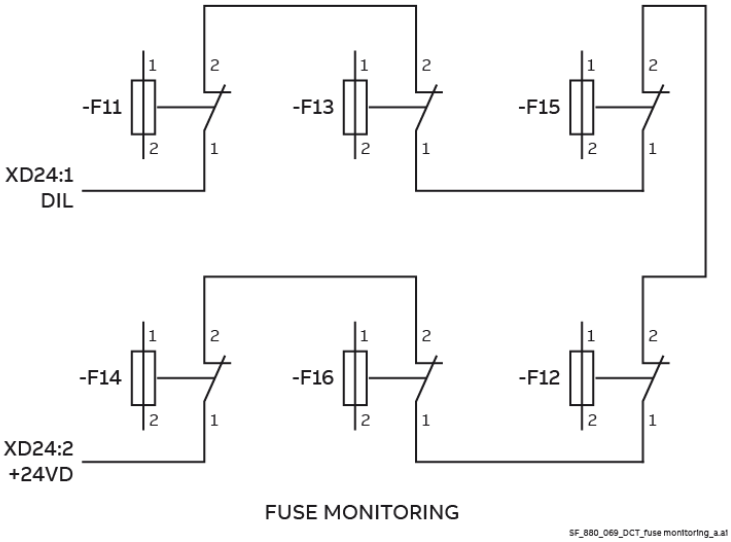

The micro switch is good for 2 A and 250 V_{AC}.

Circuit diagram T8 with galvanic isolation (+S189)

The galvanic isolation is an option for units size T8 and rated voltages ≤ 990 V_{AC}.
It replaces the high-ohmic voltage measurement and gives the advantage of a total isolation between power part and the unit's electronics.
The six fuses (F90) and the two 3-phase transformers (T90) are located outside the unit. The internal input and output voltage measurement channels are removed and connected to the two 3-phase transformers (T90).

3-phase transformer (T90)

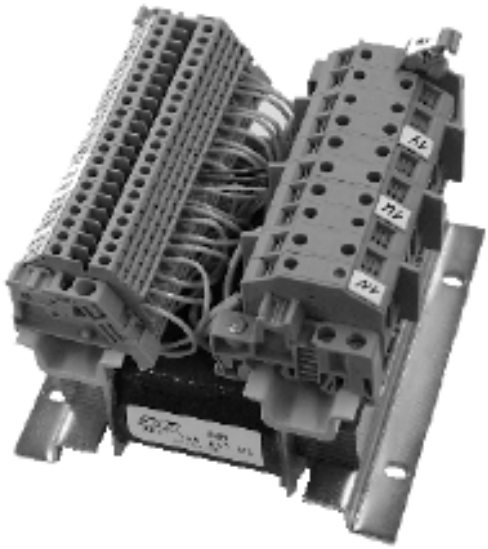

3ADT745047P0001

SDCS-PIN-H51

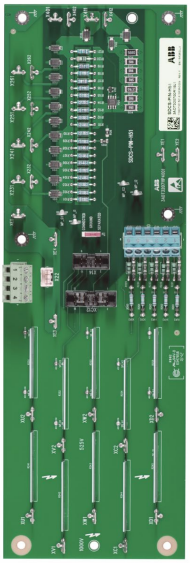

Fuse (F90)

1000 V, 10 A

Hardware and firmware settings

Voltage coding				
Size	**T8**			
Unit nominal voltage [V_{AC}] (dd) ①	04 (400 V) 05 (500 V)	07 (690 V)	08 (800 V)	10 (990 V)
Rated mains voltage [V_{AC}]	110 ... 525	315 ... 690	360 ... 800	450 ... 990
Voltage measurement scaled by type code (95.16) or parameter (95.19)	500	690	800	990
Measuring board	**SDCS-PIN-H01 use connector X15**			

Galvanic isolation				
Fuse (**F90**)	1000 V, 10 A			
3 phase transformer (**T90**)	**3ADT745047P0001**			
Secondary Terminals	2U1 2V1 2W1 2N	2U3 2V3 2W3 2N	2U4 2V4 2W4 2N	2U5 2V5 2W5 2N

① Rated voltage see the name plate of the unit.

Typical circuit diagram for units size T8 with three legs and galvanic isolation:

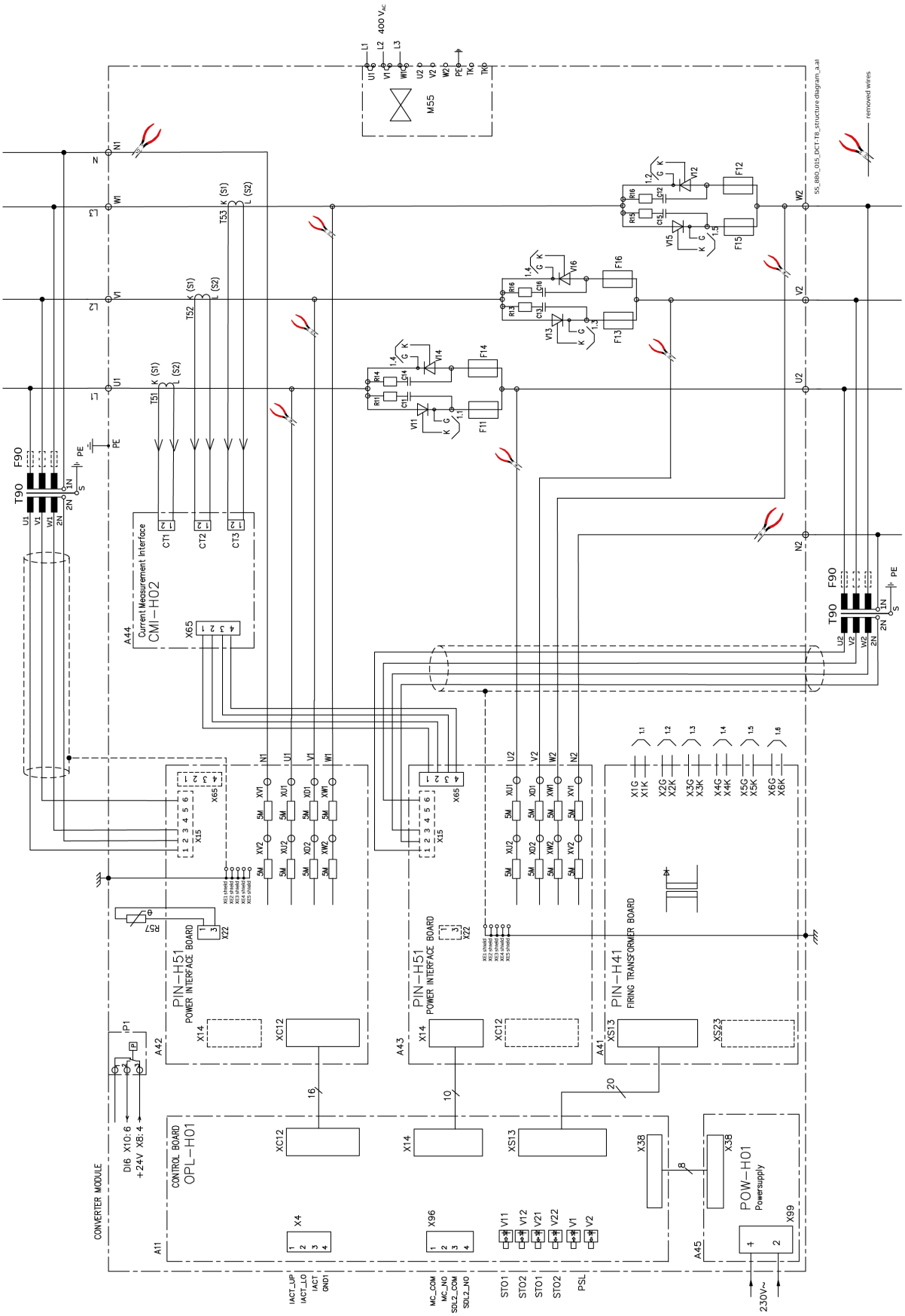

3-phase transformer (T90)

Principle diagram of the 3-phase transformer (T90).

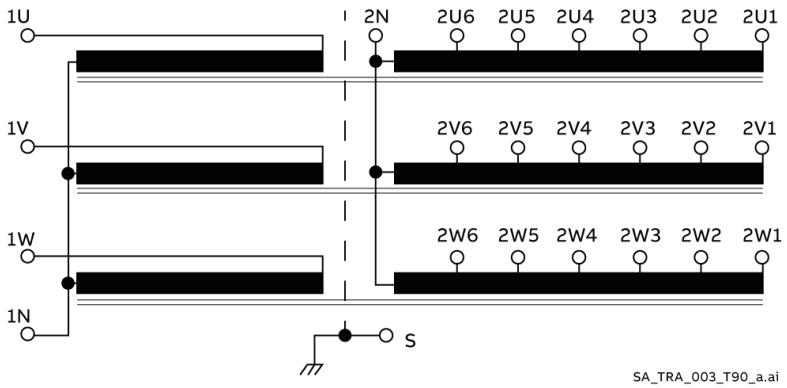

(3ADT745047)

Data

Selectable transfer ratios, U_{prim}:	500, 600, 690, 800,990, 1190 V_{AC} rms
Output voltage:	7.3 V_{AC} rms
Insulation voltage:	1200 V
Isolation test voltage:	3500 V
Ambient temperature range:	- 10 ... + 70 °C
Weight:	2.1 kg

Dimensions [mm]

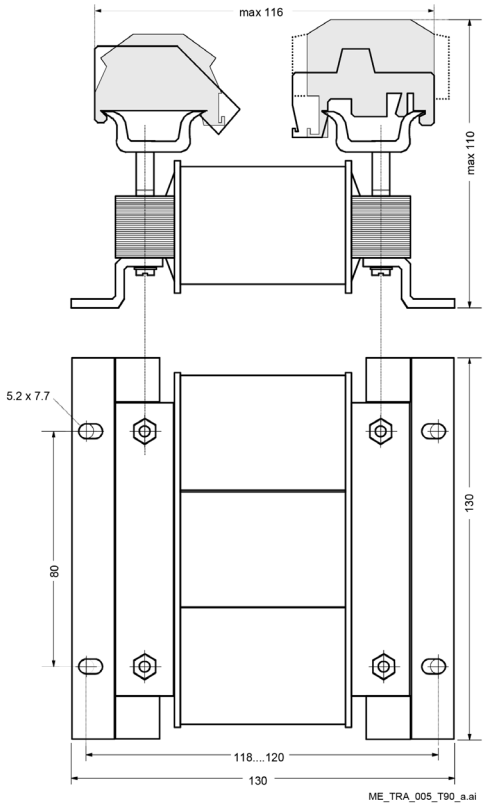

Note: The terminals on the primary side of the transformer are a special lug terminal design.

Handling hints: First turn the screw counterclockwise to the end stop, then swing out the shrouding cover. Put in the cable lug, swing in the shrouding cover, and fasten the connection by turning the screw clockwise.

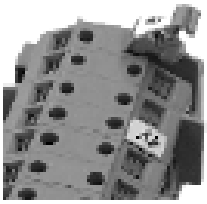

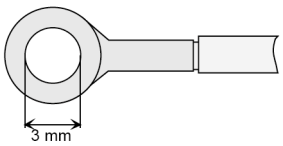

Circuit diagram T8 with multitap voltage measurement (+S189)

For multitap the galvanic isolation is a must and thus, is always used for units size T8.
It is used to replace the high-ohmic voltage measurement and gives the advantage of a total isolation between power part and the unit's electronics.
The four fuses (F90) and the two single-phase transformers (T93) are located outside the unit. The internal input and output voltage measurement channels are removed and connected to the two single-phase transformers (T93).

For more information consult the DCT880 Multitap Control Manual.

Circuit diagram T8 with external output voltage measurement(+S191)

The internal high ohmic output voltage measurement channels on the SDCS-PIN-H51 with location code -A43 are removed.

This plus code includes a 4-pole cable which is 2 meters long. One end comes with faston connectors to be connect to either connectors XU2, XV2, XW2, XC2, XD2 or connectors XU1, XV1, XW1, XC1, XD1 on the SDCS-PIN-H51. The other side is to be connected to the external output voltage measurement source.

Example circuit diagram for units size T8 with three legs and external output voltage measurement:

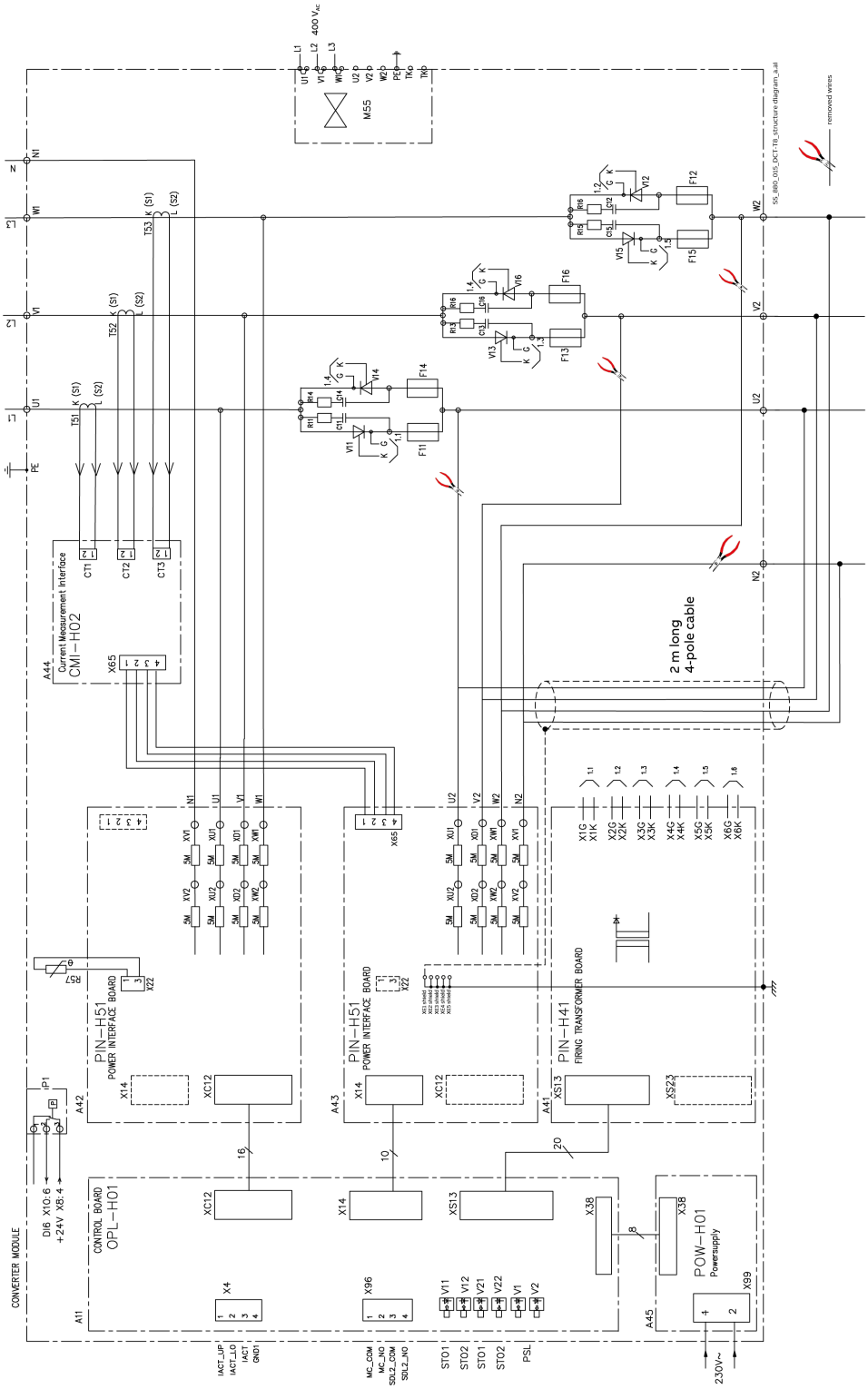

Location of F-type adapters and interfaces

Tighten the screws to secure the F-type extension modules and the memory unit.

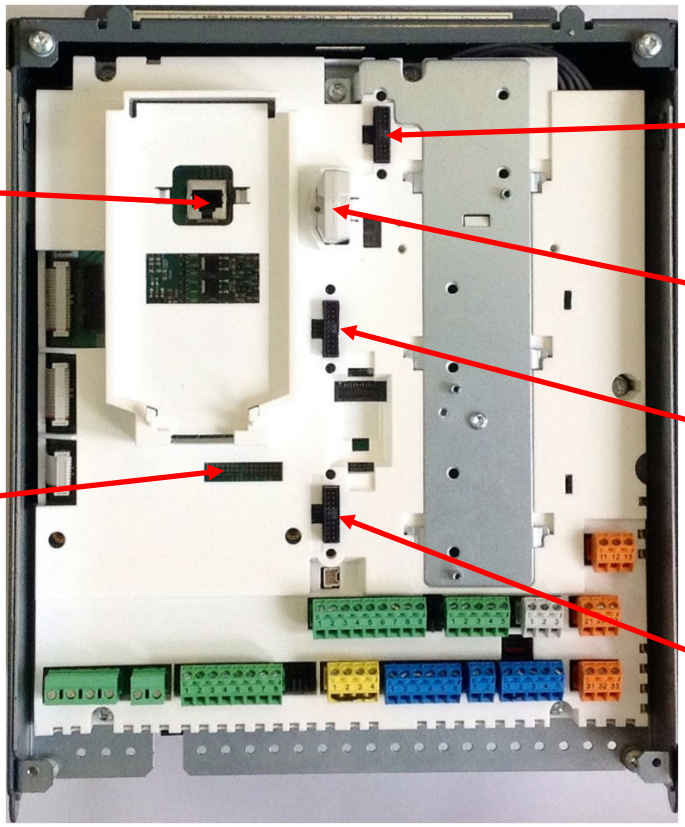

Attention: The control panel is **not** part of the standard delivery. It needs to be added using either plus code +J404 ACS-AP-I or +J429 ACS-AP-W.

Fieldbus adapters

Attention: A maximum of 2 Fieldbus adapters can be activated and configured using parameter groups 50 … 56.

I/O extension modules

Attention: A maximum of 3 I/O extension modules (FIO-01, FIO-11, FDIO-01 or FAIO-01) can be activated and configured using parameter groups 14 … 16.

Accessories

Control panel (T1 ... T8)

Attention: The control panel is **not** part of the standard delivery. It needs to be added using a plus code.

Plus code	Option	Description
+J404	ACS-AP-I	The DCT880 is delivered with a standard control panel.
+J429	ACS-AP-W	The DCT880 is delivered with a Bluetooth capable control panel.

Daisy chain DPI-H01 kit (T1 ... T8)

Daisy chain adapters are used to connect several thyristor power controllers to one control panel or to a PC via a control panel. Maximum of 32 nodes are possible. The control panel/PC is the master, while the thyristor power controllers equipped with a daisy chain adapter are followers.
Note: The DPI-H01 kit can be ordered together with the thyristor power controller using plus code +J428.

Contents of the kit

① Plastic cover.
② SDCS-DPI-H01 adapter.
③ Patch cable.
④ Grounding cable plus screw.
⑤ Stand offs.

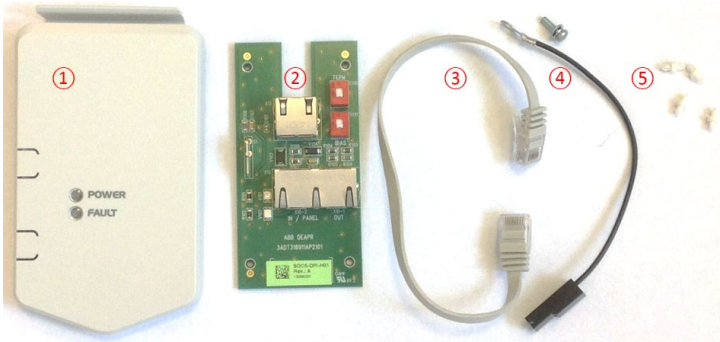

Layout

① Clip to attach the plastic cover.
② Status LEDs via light pipes.
③ X13 for the patch cable to the unit.
④ Termination switch (S100).
⑤ Bias switch (S101).

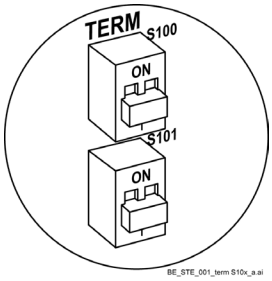

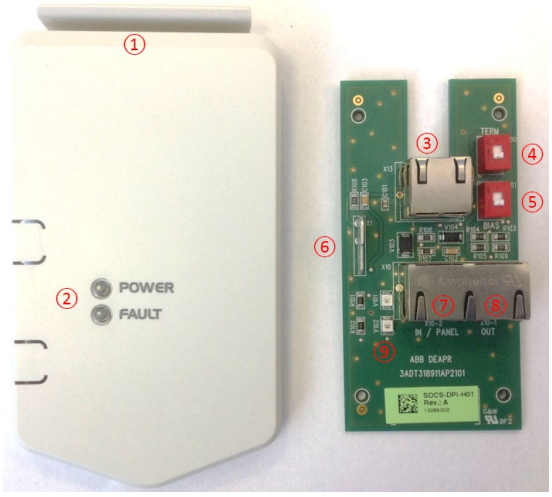

⑥ X1 for grounding.
⑦ X10-1 (IN/PANEL) for control panel.
⑧ X10-2 (OUT) for the next unit.
⑨ Status LEDs:

Name	Color	Description
POWER	Green	The unit is powered.
FAULT	Red	The unit has an active fault.

Installation

1. Inset the four stand offs into the intermediate cover.
2. Connect the patch cable between X13 on the SDCS-CON-H01 and X13 on the SDCS-DPI-H01 adapter.
3. Plug the SDCS-DPI-H01 adapter onto the standoffs.
4. Connect the grounding cable at X1 and the grounding standoff using the screw.
5. Connect the cables to the control panel/a thyristor power controller using X10-2 and X10-1.

6. Attach the plastic cover.

7. Attach the front cover.

Chaining a control panel

This figure shows how to chain a control panel to several units:

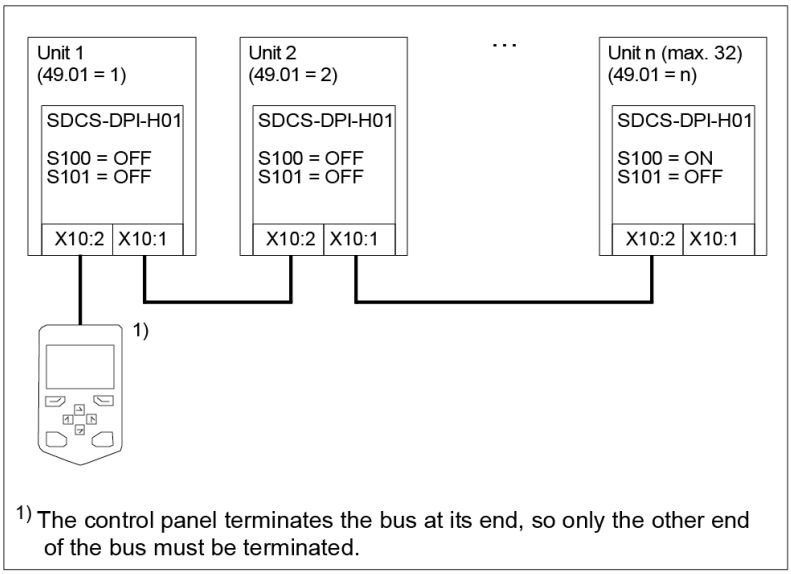

Chaining a PC via a control panel

This figure shows how to chain a PC via a control panel to several units.

Note: When a control panel is used for a PC connection, it cannot be used to operate the units.

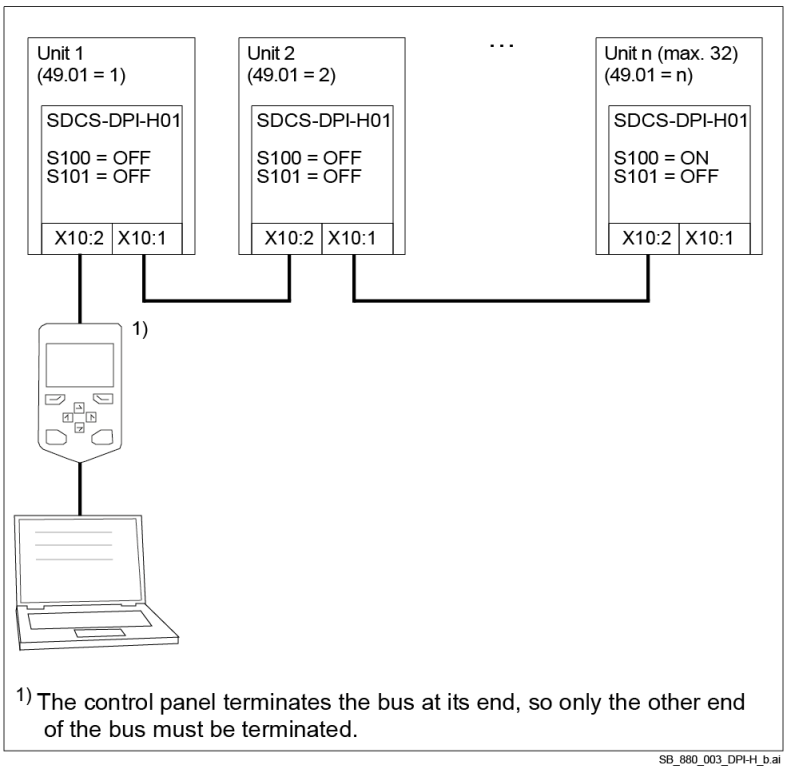

Setting up the firmware

1. Power up the unit.
2. Set the node ID, see 49.01 Node ID number. All devices connected to the panel bus must have a unique node ID. It is advisable to reserve node ID 1 for spare/replacement units, because they have node ID 1 as default setting.
3. Set the baud rate, see 49.03 Baud rate. The baud rate has to be the same for all nodes on the panel bus.
4. Select a suitable communication loss action, see 49.04 Communication loss time and 49.05 Communication loss action.
5. Save the settings with 49.06 Refresh settings = Refresh.

Note: Refreshing may cause a communication break, thus reconnecting the units may be required.

Semiconductor fuses (F1)

Aspects of fusing for the thyristor power controller.

Thyristor power controller configuration

Fuses are **required** in all cases to protect against further damage. In some configurations, this will entail the following questions:

1. Where to place the fuse?
2. In the event of what faults will the fuses provide protection against damage?

The figure shows the arrangement of external fuses for thyristor power controllers size T1 … T4.
External fuses can be used for all T1 … T4 units with a mains voltage up to 690 V_{AC}.

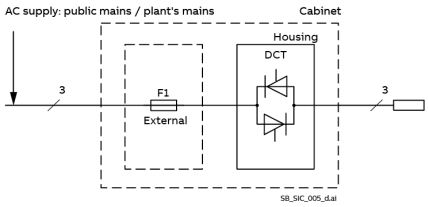

The figure shows the arrangement of internal fuses in thyristor power controllers size T1 … T4.
Optional internal fuses are available for all T1 … T4 units with a mains voltage up to 525 V_{AC}.
Note: For higher mains voltage up to 690 V_{AC} external fuses must be used.

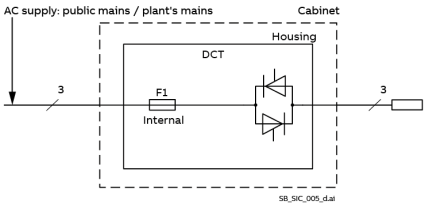

The figure shows the arrangement of internal fuses for thyristor power controllers size T5.
Internal fuses are standard for all T5 with a mains voltage up to 690 V_{AC}.

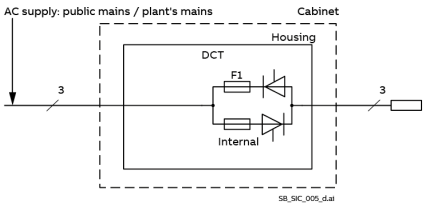

The figure shows the arrangement of internal fuses for thyristor power controllers size T6.
Internal fuses are standard for all T6.

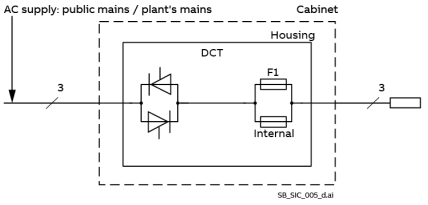

The figure shows the arrangement of internal fuses for thyristor power controllers size T8.
Internal fuses are standard for all T8.

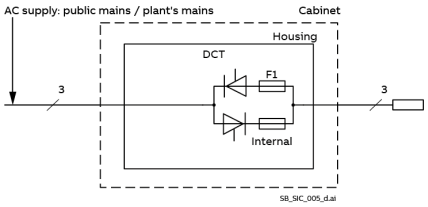

Conclusion

Never use standard fusing instead of semiconductor fusing in order to save money on the installation. In the event of a fault condition, the small amount of money saved can cause the semiconductors or other devices to explode and cause fires. Adequate protection against short circuit and earth fault, as depicted in the EN50178 standard, is possible only with appropriate semiconductor fuses.

External semiconductor fuses and fuse holders

Thyristor power controllers **require** either external or internal semiconductor fuses.
External fuses **can** be used for all T1 … T4 units with a mains voltage up to 690 V_{AC}.
The fourth column of the tables below assigns the semiconductor fuses to the thyristor power controller.
Notes:

- External fuses and fuse holders have to be ordered in addition to the thyristor power controller.
- Units size T5 … T8 do **not** require external fuses since they always have internal fuses.

400 V/525 V units T1 … T4 (external fuses)

Note: UR = Ultra Rapid.

Size	Thyristor power controller 400 V/525 V	Maximum allowed I^2t value at rated voltage [A^2s]	External fuses		
			Fuse type	Fuse holder	Fuse size
T1	DCT880-W0b-0020-04/05	1,050	50 A 690 V UR	OFAZ 00 S3L	DIN 000 Type T
	DCT880-W0b-0035-04/05				
	DCT880-W0b-0055-04/05		80 A 690 V UR		
	DCT880-W0b-0080-04/05	5,000	125 A 690 V UR		
	DCT880-W0b-0100-04/05	11,000	160 A 690 V UR	OFAZ 1 S3	DIN 1*
	DCT880-W0b-0125-04/05	20,000	200 A 690 V UR		
T2	DCT880-W0b-0160-04/05		250 A 690 V UR	OFAZ 2 S3	
	DCT880-W0b-0200-04/05	137,000	315 A 690 V UR		
	DCT880-W0b-0245-04/05	245,000	350 A 690 V UR		
T3	DCT880-W0b-0325-04/05		450 A 690 V UR	OFAZ 3 S3	DIN 2
	DCT880-W0b-0360-04/05	320,000	500 A 690 V UR		
	DCT880-W0b-0420-04/05		630 A 690 V UR		
T4	DCT880-W0b-0550-04/05	781,000	800 A 690 V UR	3 • 170H 3006	DIN 3
	DCT880-W0b-0675-04/05	980,000	900 A 690 V UR		
	DCT880-W0b-0740-04/05		1000 A 690 V UR		

690 V units T1 … T4 (external fuses)

Note: UR = Ultra Rapid.

Size	Thyristor power controller 690 V	Maximum allowed I^2t value at rated voltage [A^2s]	External fuses		
			Fuse type	Fuse holder	Fuse size
T1	DCT880-W0b-0035-07	1,050	50 A 690 V UR	OFAZ 00 S3L	DIN 000 Type T
	DCT880-W0b-0080-07	5,000	125 A 690 V UR		
	DCT880-W0b-0100-07	11,000	160 A 690 V UR	OFAZ 1 S3	DIN 1*
T2	DCT880-W0b-0160-07	20,000	250 A 690 V UR	OFAZ 2 S3	
	DCT880-W02-0200-07	137,000	315 A 690 V UR		
T3	DCT880-W0b-0360-07	320,000	500 A 690 V UR	OFAZ 3 S3	DIN 2
T4	DCT880-W0b-0630-07	980,000	900 A 690 V UR	3 • 170H 3006	DIN 3

Dimensions of external fuses

Size DIN 000 Type T [mm]

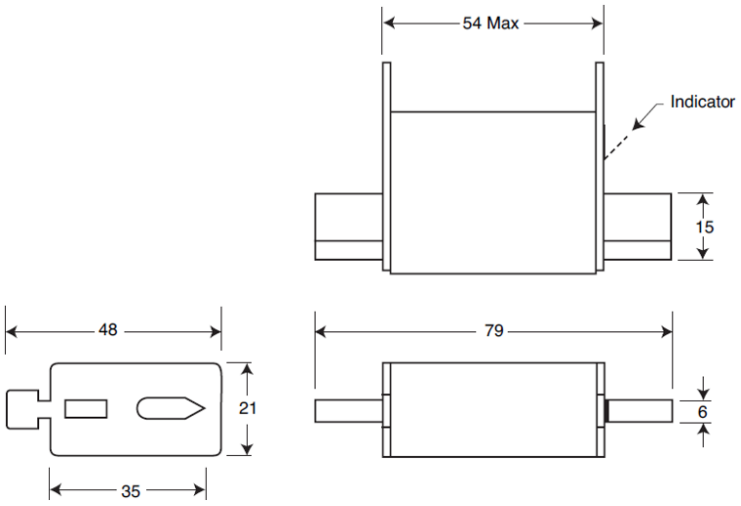

Size DIN 1* and DIN 2 [mm]

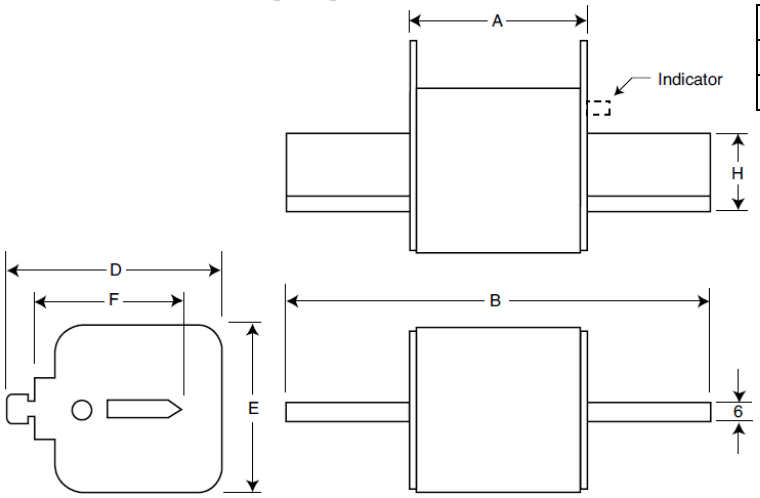

Size	A	B	D	E	F	H
1*	69	135	58	45	40	20
2	69	150	71	55	48	26

Size DIN 3 [mm]

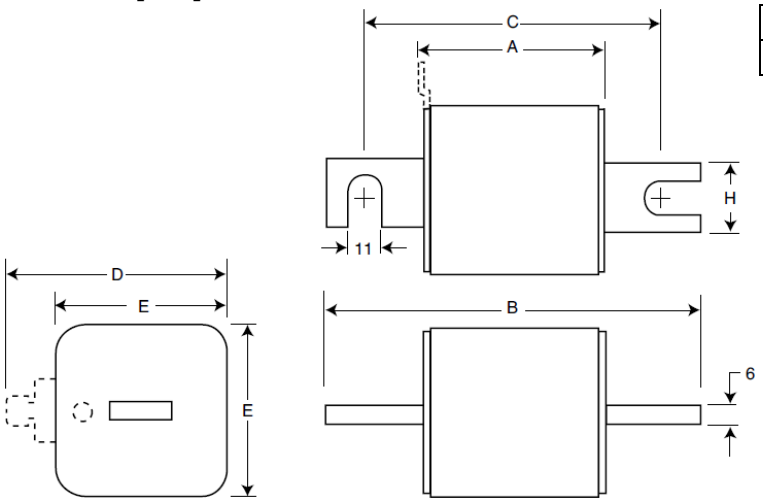

Size	A	B	C	D	E	H
3	51	139	108	90	76	30

Dimensions of fuse holders
OFAZ xx xxx

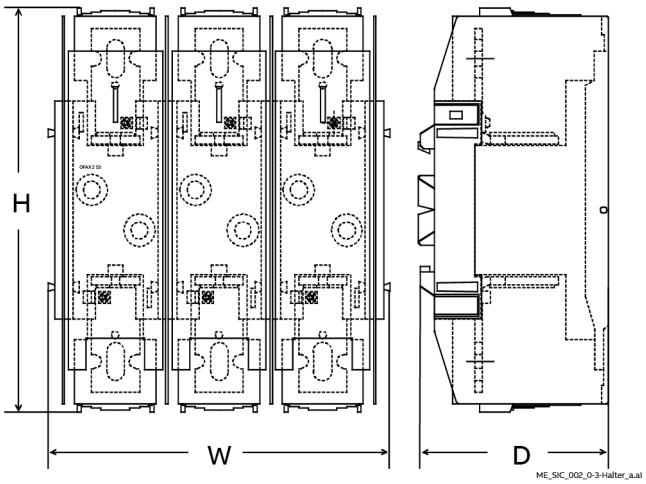

Fuse holder	H • W • D [mm]	Protection
OFAZ 00 S3L	148 •112 • 111	IP20
OFAZ 1 S3	250 • 174 • 123	IP20
OFAZ 2 S3	250 • 214 • 133	IP20
OFAZ 3 S3	265 • 246 • 160	IP20

170H 3006 (IP00)

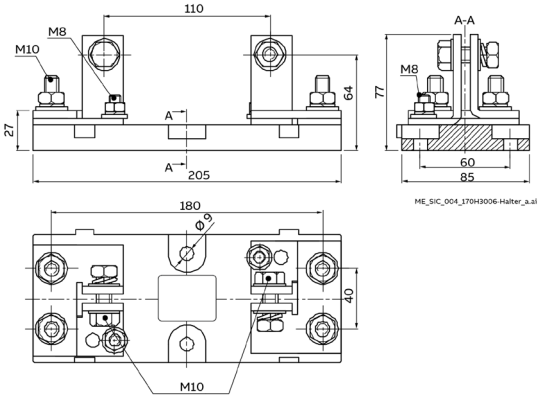

Internal semiconductor fuses (option for T1 … T4)
Thyristor power controllers **require** either external or internal semiconductor fuses.
Optional internal fuses are available for all T1 … T4 with a mains voltage up to 525 V_{AC}.
The fourth column of the table below assigns the semiconductor fuses to the thyristor power controller.
Note: Internal fuses for sizes T1 … T4 can be ordered together with the thyristor power controller using plus code +S500.

400 V/525 V units T1 … T4 (internal fuses)
Note: UR = Ultra Rapid.

Size	**Thyristor power controller 400 V/525 V**	**Maximum allowed I^2t value at rated voltage [A^2s]**	**Internal fuses**	
			Fuse type	Fuse per leg
T1	DCT880-W0b-0020-04/05+S500	1,050	63 A 690 V UR	1
	DCT880-W0b-0035-04/05+S500			
	DCT880-W0b-0055-04/05+S500		71 A 690 V UR	
	DCT880-W0b-0080-04/05+S500	5,000	100 A 690 V UR	
	DCT880-W0b-0100-04/05+S500	11,000	71 A 690 V UR	2①
	DCT880-W0b-0125-04/05+S500	20,000	100 A 690 V UR	
T2	DCT880-W0b-0160-04/05+S500		200 A 690 V UR	1
	DCT880-W0b-0200-04/05+S500	137,000	315 A 690 V UR	
	DCT880-W0b-0245-04/05+S500	245,000		
T3	DCT880-W0b-0325-04/05+S500		450 A 690 V UR	
	DCT880-W0b-0360-04/05+S500	320,000		
	DCT880-W0b-0420-04/05+S500		630 A 690 V UR	
T4	DCT880-W0b-0550-04/05+S500	781,000	800 A 690 V UR	
	DCT880-W0b-0675-04/05+S500	980,000	1000 A 690 V UR	
	DCT880-W0b-0740-04/05+S500		1100A 690 V UR	

① **Example:** Mounting of double fuses:

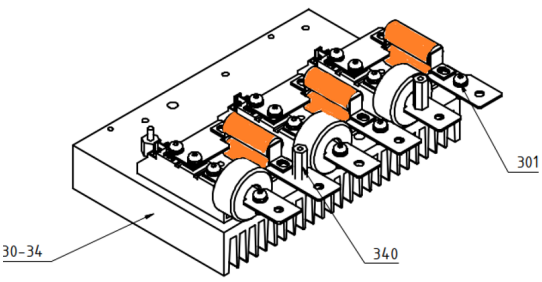

Internal semiconductor fuses T5 (included in delivery)
Thyristor power controllers **require** either external or internal semiconductor fuses.
Internal fuses are **standard** for all T5 units with a mains voltage up to 690 V_{AC}. Thus, T5 do not require external fuses.
The fourth column of the table below assigns the semiconductor fuses to the thyristor power controller.

400 V/525 V/690 V units T5 (internal fuses)
Note: UR = Ultra Rapid.

Size	Thyristor power controller 400 V/525 V/690 V	Maximum allowed I^2t value at rated voltage [A^2s]	Internal fuses	
			Fuse type	Fuse per leg
T5	DCT880-W03-0890-0d DCT880-W02-0960-0d	670,000 per fuse	900 A 690 V UR	2

Internal semiconductor fuses T6 (included in delivery)
Thyristor power controllers **require** either external or internal semiconductor fuses.
Internal fuses are **standard** for all:
- T6 special design units with a mains voltage up to 690 V_{AC}.
- T6 standard units with a mains voltage up to 800 V_{AC}.

Thus, T6 do not require external fuses.
The fourth column of the table below assigns the semiconductor fuses to the thyristor power controller.

400 V/525 V/690 V units T6 special design (internal fuses)
Note: UR = Ultra Rapid.

Size	Thyristor power controller 400 V/525 V/690 V	Maximum allowed I^2t value at rated voltage [A^2s]	Internal fuses	
			Fuse type	Fuse per leg
T6 special design	DCT880-W0b-1300-04/05/07	945,000 per fuse	1000 A 690 V UR	2
	DCT880-W0b-1750-04/05/07	2,450,000 per fuse	1400 A 690 V UR	2

400 V/525 V/690 V/ 800 V units T6 standard (internal fuses)
Note: UR = Ultra Rapid.

Size	Thyristor power controller 400 V/525 V/690 V	Maximum allowed I^2t value at rated voltage [A^2s]	Internal fuses	
			Fuse type	Fuse per leg
T6 standard	DCT880-W0b-1300-04/05/07	945,000 per fuse	1000 A 690 V UR	2
	DCT880-W0b-1300-08	2,150,000 per fuse	1000 A 1250 V UR	2
	DCT880-W0b-1750-04/05/07	2,450,000 per fuse	1400 A 690 V UR	2
	DCT880-W0b-1750-08	2,800,000 per fuse	1100 A 1250 V UR	2

400 V/500 V/690 V/ 800 V/ 990 V units T8 (internal fuses)
Note: UR = Ultra Rapid.

Size	Thyristor power controller 800 V	Maximum allowed I^2t value at rated voltage [A^2s]	Internal fuses	
			Fuse type	Fuse per leg
T8	DCT880-W03-2100-04/05	1,200,000per fuse	2500 A 690 V UR	2
	DCT880-W03-2100-07/08	3,000,000 per fuse	2500 A 1000 V UR	2
	DCT880-W03-2100-10	4,500,000 per fuse	2500 A 1250 V UR	2
	DCT880-W03-2700-04/05	1,200,000per fuse	2500 A 690 V UR	2
	DCT880-W03-2700-07/08	4,700,000 per fuse	3000 A 1000 V UR	2
	DCT880-W03-2700-10	4,500,000 per fuse	2500 A 1250 V UR	2
	DCT880-W03-3200-04/05	1,200,000per fuse	2500 A 690 V UR	2
	DCT880-W03-3200-07/08	4,700,000 per fuse	3000 A 1000 V UR	2
	DCT880-W03-3200-10	4,500,000 per fuse	2500 A 1250 V UR	2
	DCT880-W03-3900-07/08	4,700,000 per fuse	3000 A 1000 V UR	2
	DCT880-W03-4200-04/05	3,250,000 per fuse	3500 A 690 V UR	2

Synchronization fuse (F3)

A synchronization fuse (F3) is only needed for DCT880-W02 units (two legs).
It is located between phase L2 and V1 of the unit which is either a busbar or a FASTON connector. See also chapter Wiring.

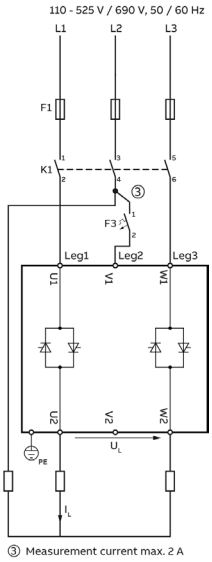

Fuse (F3) is needed to protect the cable connected between L2 and V1. Typically, a **M**iniature **C**ircuit **B**reaker (MCB) of 2 … 6 A is used.

Fuse (F9) for connection to terminal UN1 (T1 … T5)

A fuse (F9) for connection between star point and terminal UN1 is only needed when the DCT880 is connected to one phase and the star point to another phase.
It is located between the star point, in this example connected to L2, and terminal UN1. See also chapter Wiring.

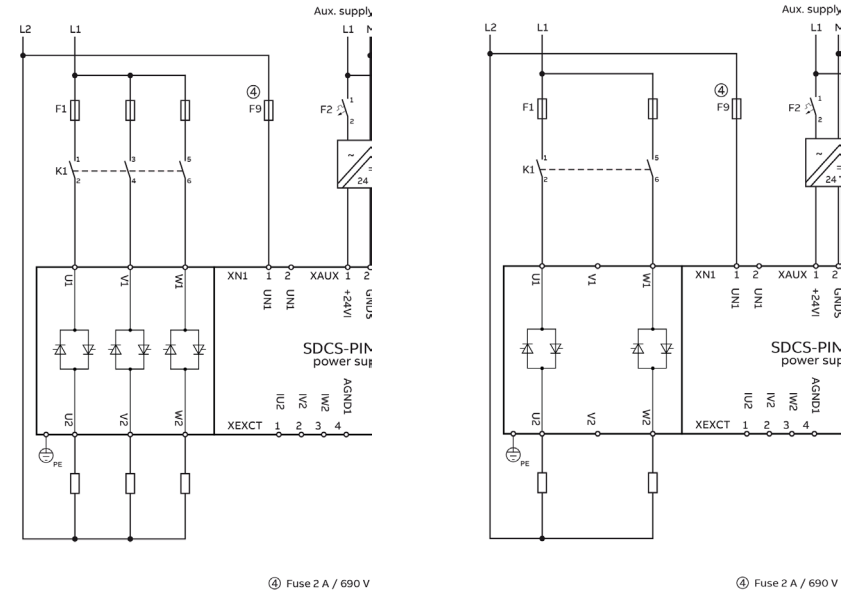

Fuse (F9) is needed to protect the cable connected between the star point, in this example connected to L2, and terminal UN1. Typically, a fuse 2 A/690 V is used.
Note: This fuse is needed for unts size T1 … T5 only.

Auxiliary transformer (T2) for the +24 V_{DC} power supply and fans

The unit requires various auxiliary voltages, e.g., the unit's electronics needs +24 V_{DC} and some cooling fans requires either a single-phase supply of 115 V_{AC} or 230 V_{AC}. The auxiliary transformer (T2) is designed to supply the +24 V_{DC} power supply for the unit's electronics and the cooling fans.
Please be advised, that each DCT880 should have its own 24 V_{DC} power supply.

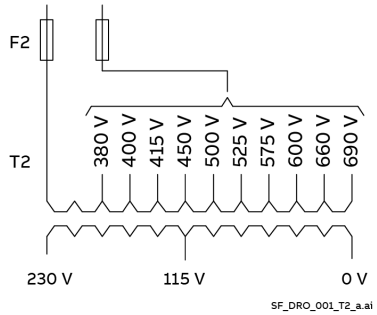

Input voltage: 230/380 … 690 V_{AC}, ±10 %, single-phase
Input frequency: 50 … 60 Hz
Output voltage: 115/230 V_{AC} single-phase

Transformer (T2)	Power [VA]	Weight [kg]	Power losses [W]	Fuse F2 [A]	Secondary current [A]
T2	1400	15	100	16	6 @ 230 V 12 @ 115 V

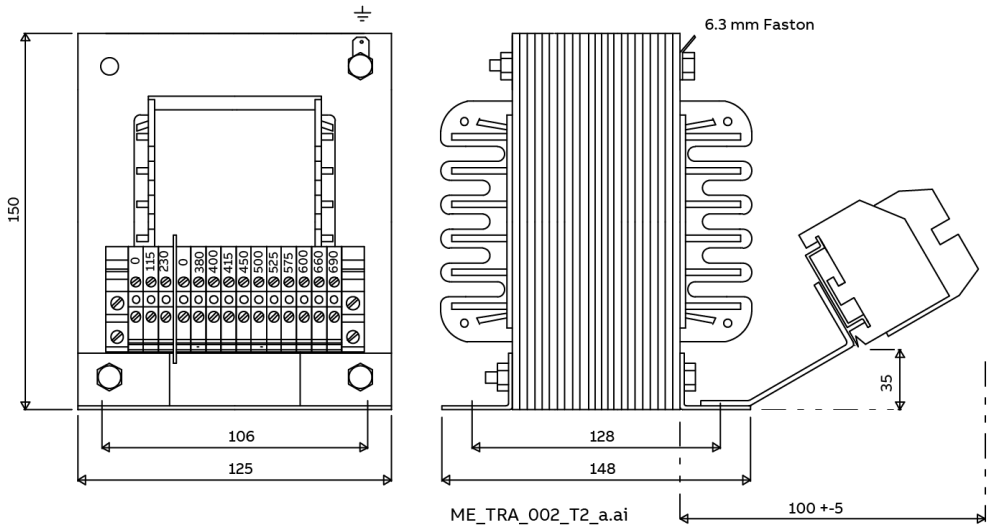

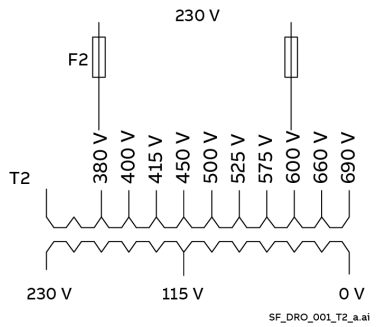

Commissioning hint:
T2 is designed to work as a 230 V_{AC} to 230 V_{AC} isolation transformer to open or avoid ground loops. Connect the 230 V_{AC} at the 380 V_{AC} and 600 V_{AC} taping according to the drawing on the left-hand side.

Using the control panel

Refer to the ACX-AP-x assistant control panel's user's manual (3AUA0000085685).
Attention: The control panel is **not** part of the standard delivery. It needs to be added using either plus code +J404 ACS-AP-I or +J429 ACS-AP-W.

Start-up procedure

Start-up according to the flow chart below:

Overview diagram

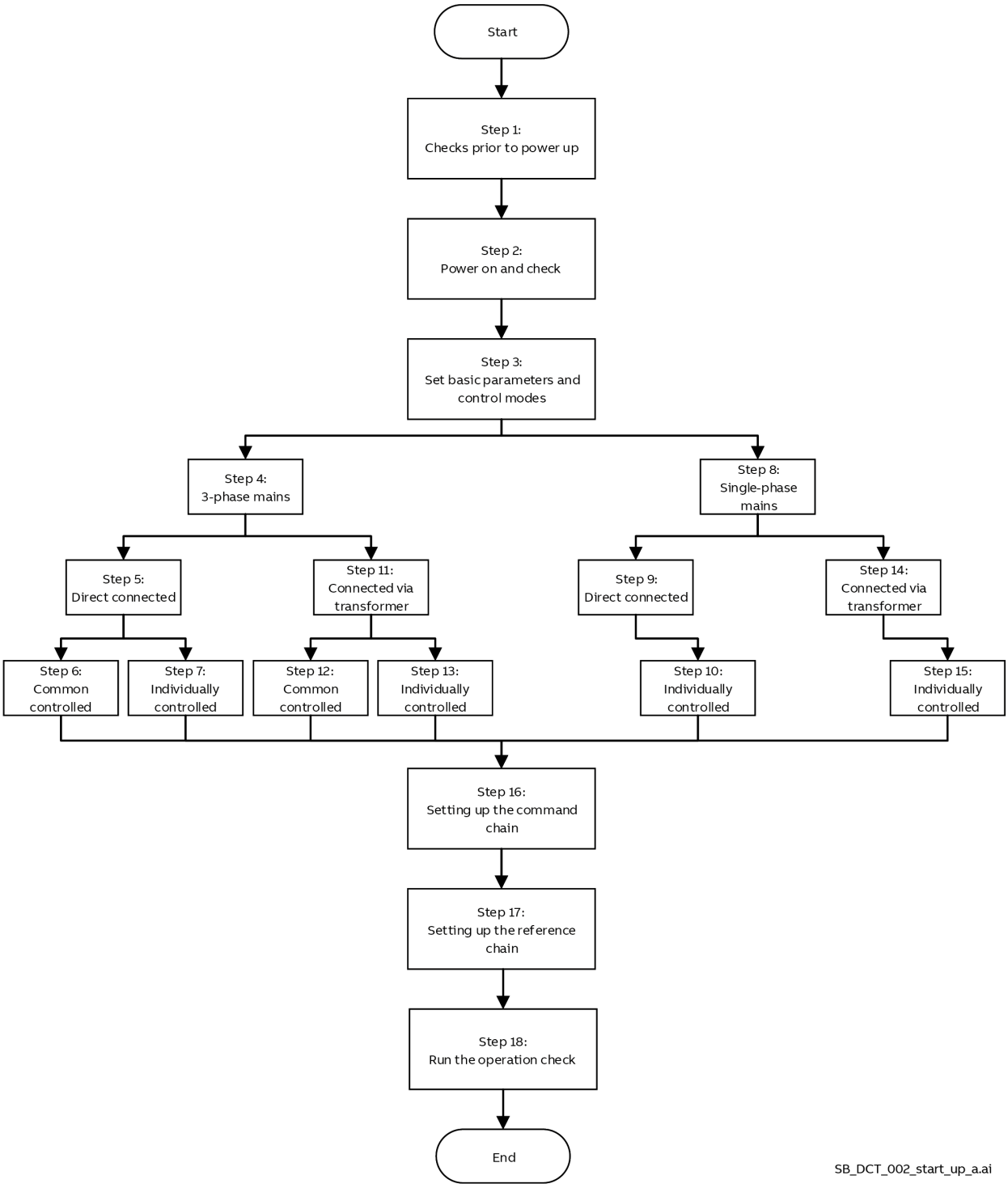

Step 1: Checks prior to power up

Check the following before powering the thyristor power controller:

1. Check the wiring to the input terminals (U1, V1, W1) and output terminals (U2, V2, W2).
2. Check that the grounding wires are connected to ground (PE).

WARNING
Be sure to connect the grounding wires of the power controller to the ground electrodes.
Otherwise, an electric shock could occur.

3. Check the wiring to the auxiliary voltage supply (24 V_{DC} at XAUX) and the fan supply, if applicable.
4. Check the wiring to the external voltage and current measurement connected to XEXCT: 1/3/5/7 and XEXVM: 1/2/3/4 if used.
5. Check the wiring from XN1: 1 to neutral for single-phase + neutral or 3 x single-phase + neutral configurations.

Single-phase + neutral	3 x single-phase + neutral
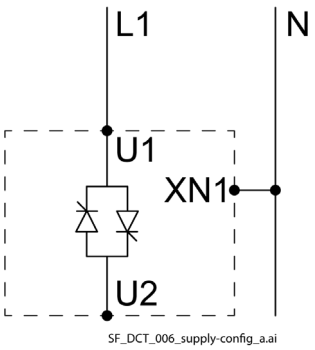	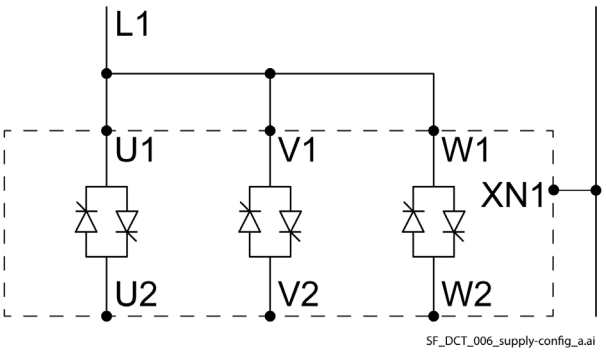

6. Check the auxiliary circuit terminals and main circuit terminals for short circuit or ground faults.
7. Check for loose terminals, connectors, and screws.
8. Make sure that all switches of devices connected to the power controller are turned OFF. Power on the power controller with any of those switches being ON may cause unexpected behavior at load side.

Step 2: Power ON and check

WARNING
Be sure to mount the front cover before turning the power on. Do not remove the cover when the power controller is on.
Do not operate switches with wet hands.
Otherwise, an electric shock could occur.

Turn the auxiliary power on and check the following:

1. Make sure all parameters are at factory settings (default).
2. Check that the control panel displays no fault and set date and time.
3. Check that the used analog inputs work properly:
   See 12.11 AI1 actual value, 12.21 AI2 actual value and 12.31 AI3 actual value.
   Set AI1 and AI2 from voltage to current if needed (12.15 AI1 unit selection and 12.25 AI2 unit selection).
   AI3 is voltage only.
4. Check that the used digital inputs work properly:
   See 10.01 DI status.
5. Set 99.01 Supply Voltage depending on the supply configuration:

99.04 Supply Configuration:		99.01 Supply Voltage:
0: 3ph UVW	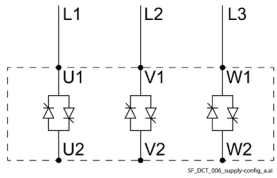	Phase-to-phase voltage (U_{L1L2}, U_{L1L3}, U_{L2L3}).
1: 3ph UW Eco	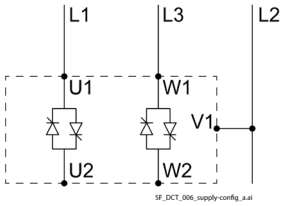	
2: 3 x 1ph + N	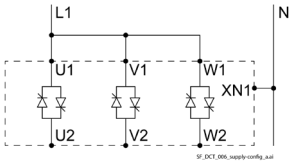	Phase voltage (U_{L1N}).
3: 1ph + N	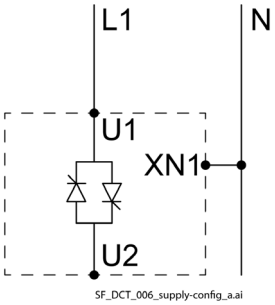	
Multitap	-	See separate manual.
Scott transformer	-	

6. Turn on the mains and check the following:
   In case of 3-phase mains, check the phase-to-phase voltages using 01.07 Voltage U1 - V1 actual, 01.08 Voltage V1 - W1 actual, 01.09 Voltage W1 - U1 actual.
   In case of single-phase mains, check the voltage between phase and neutral using 01.01 Voltage U1 - N actual, 01.02 Voltage V1 - N actual, 01.03 Voltage W1 - N actual.

Step 3: Set basic parameters and control modes

Please search for your configuration in following tables and start-up the power controller accordingly.

- Overview diagram.
- Steps 4/5/6.
- Steps 4/5/7.
- Steps 4/11/12.
- Steps 4/11/13.
- Steps 8/9/10.
- Steps 8/14/15.

Step 4/5: Basic settings for 3-phase mains and direct coupled loads

3-phase mains and no transformer between the unit's output and the load.

Step 6: Common controlled loads, leg 2 and leg 3 follow leg 1

99.04 Supply Configuration

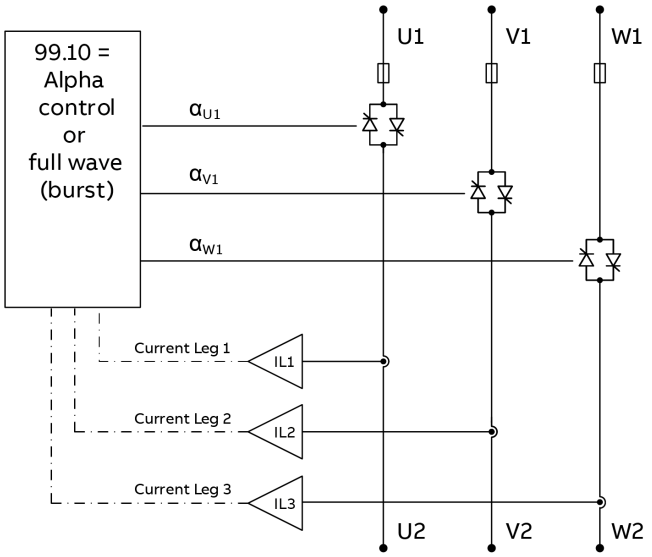

99.05 Load Configuration

SF_DCT_011_alpha-control_a.ai

Parameter	Parameter description/setting
99.01 Supply Voltage	Rated supply voltage.
99.02 Load current	Rated load current.
99.03 Load Voltage	Rated load voltage.
99.04 Supply Configuration	Describes the configuration at the input (U1, V1, W1) of the unit. For detailed description, see group 99.

0: 3ph UVW	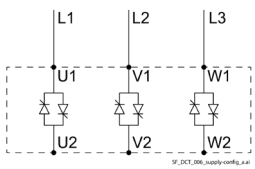	E.g., for units with 3 legs (W03).
1: 3ph UW eco	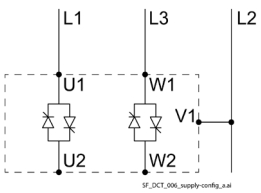	E.g., for units with 2 legs (W02).

99.05 Load Configuration	Describes the configuration at the output of the unit. For detailed description, see group 99.

0: 3ph star (3S)	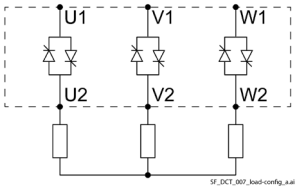	The load is connected in a star configuration. Set 99.03 Load Voltage to the connected phase-to-phase voltage (e.g., U2 … V2).
1: 3ph star + N (4S)	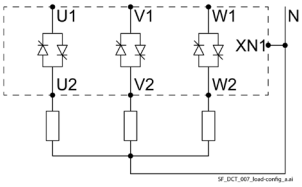	The load is connected in star configuration with neutral connected to the star point. Set 99.03 Load Voltage to the connected phase voltage (e.g., U2 … N).
2: 3ph delta (3D)	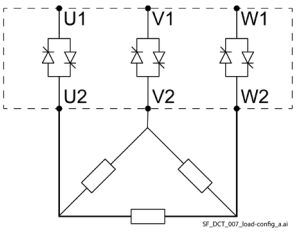	The load is connected in a delta configuration.
3: 3ph open delta UV (6D)	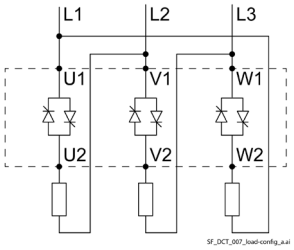	The load is connected in an open delta configuration (clockwise phase connection U V W).
4: 3ph open delta UW (6D)	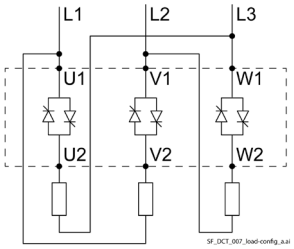	The load is connected in an open delta configuration (anticlockwise phase connection U W V).

99.10 Leg 1 Control Mode	Selection of control mode for leg 1. Default input for the reference is AI1 see Appendix Leg 1. For detailed description, see group 99.

2	Full wave fix cycle; full wave (burst) with fix cycle control. The load power depends on 22.11 Leg 1 Actual Ref and 99.11 Leg 1 Cycle Time.
3	Full wave variable cycle; full wave (burst) with variable cycle control. The load power depends on 23.03 Leg 1 Minimum Cycle Variable Burst and 22.11 Leg 1 Actual Ref.
5	U α open loop control; phase angle control.
6	U^2 α open loop control; phase angle control.
7	I α control; phase angle control.
8	I^2 α control; phase angle control.
9	U α control; phase angle control.
10	U^2 α control; phase angle control.

	11 P α control; phase angle control. 12 Leg 1 External Ref 23.65; phase angle control.
99.25 Leg 2 Control Mode	Selection of control mode for leg 2. 13 Follow Leg 1; use the same control mode as leg 1.
99.40 Leg 3 Control Mode	Selection of control mode for leg 3. 13 Follow Leg 1; use the same control mode as leg 1.

Step 4/5: Basic settings for 3-phase mains and direct connected loads

3-phase mains and no transformer between the unit's output and the load.

Step 7: Individual controlled loads, leg 1, leg 2 and leg 3 are independent

99.04 Supply Configuration

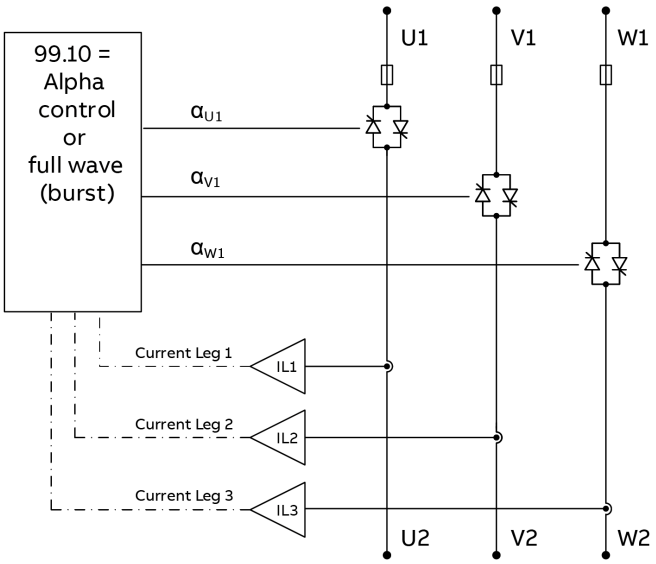

99.05 Load Configuration

SF_DCT_011_alpha-control_a.ai

Parameter	Parameter description/setting
99.01 Supply Voltage … 99.04 Supply Configuration see above.	
99.05 Load Configuration	Describes the configuration at the output of the unit. For detailed description, see group 99.

1: 3ph star + N (4S)	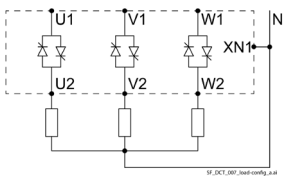	The load is connected in star configuration with neutral connected to the star point.
3: 3ph open delta UV (6D)	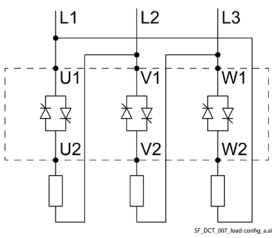	The load is connected in an open delta configuration (clockwise phase connection U V W).
4: 3ph open delta UW (6D)	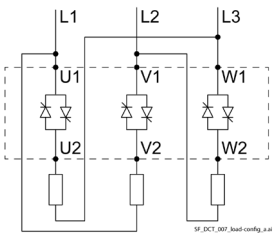	The load is connected in an open delta configuration (anticlockwise phase connection U W V).

<table>
<tr><td>99.10 Leg 1 Control Mode</td><td>Selection of control mode for leg 1. Default input for the reference is AI1 see Appendix Leg 1.
For detailed description, see group 99.

<table>
<tr><td>2</td><td>Full wave fix cycle; full wave (burst) with fix cycle control. The load power depends on 22.11 Leg 1 Actual Ref and 99.11 Leg 1 Cycle Time.</td></tr>
<tr><td>3</td><td>Full wave variable cycle; full wave (burst) with variable cycle control. The load power depends on 23.03 Leg 1 Minimum Cycle Variable Burst and 22.11 Leg 1 Actual Ref.</td></tr>
<tr><td>5</td><td>U α open loop control; phase angle control.</td></tr>
<tr><td>6</td><td>U² α open loop control; phase angle control.</td></tr>
<tr><td>7</td><td>I α control; phase angle control.</td></tr>
<tr><td>8</td><td>I² α control; phase angle control.</td></tr>
<tr><td>9</td><td>U α control; phase angle control.</td></tr>
<tr><td>10</td><td>U² α control; phase angle control.</td></tr>
<tr><td>11</td><td>P α control; phase angle control.</td></tr>
<tr><td>12</td><td>Leg 1 External Ref 23.65; phase angle control.</td></tr>
</table></td></tr>
<tr><td>99.25 Leg 2 Control Mode</td><td>Selection of control mode for leg 2. Default input for the reference is AI2 see Appendix Leg 2.
See selection of 99.10 Leg 1 Control Mode.</td></tr>
<tr><td>99.40 Leg 3 Control Mode</td><td>Selection of control mode for leg 3. Default input for the reference is AI3 see Appendix Leg 3.
See selection of 99.10 Leg 1 Control Mode.</td></tr>
</table>

Step 8/9: Basic settings for single-phase mains and direct connected loads

Single-phase mains and no transformer between the unit's output and the load.

Step 10: Individual controlled loads, leg 1, leg 2 and leg 3 are independent

99.04 Supply Configuration

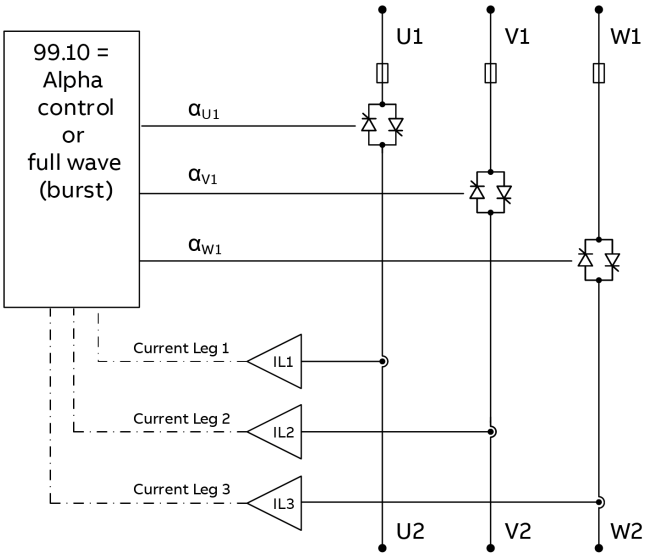

99.05 Load Configuration

SF_DCT_011_alpha-control_a.ai

Parameter	Parameter description/setting
99.01 Supply Voltage	Rated supply voltage.
99.02 Load current	Rated load current.
99.03 Load Voltage	Rated load voltage.
99.04 Supply Configuration	Describes the configuration at the input (U1, V1, W1) of the unit. For detailed description, see group 99.
2: 3 x 1ph + N 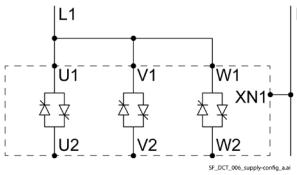	For units with 3 legs (W03) or 2 legs (W02) connected to single-phase mains.
99.05 Load Configuration	Describes the configuration at the output of the unit. For detailed description, see group 99.
9: 3 x 1ph loads 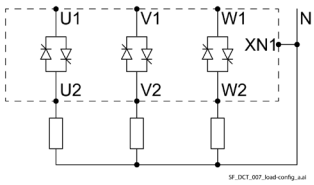	The loads are connected as single-phase loads to neutral.
99.10 Leg 1 Control Mode	Selection of control mode for leg 1. Default input for the reference is AI1 see Appendix Leg 1. For detailed description, see group 99.

	2	Full wave fix cycle; full wave (burst) with fix cycle control. The load power depends on 22.11 Leg 1 Actual Ref and 99.11 Leg 1 Cycle Time.
	3	Full wave variable cycle; full wave (burst) with variable cycle control. The load power depends on 23.03 Leg 1 Minimum Cycle Variable Burst and 22.11 Leg 1 Actual Ref.
	4	Half wave; half wave control. The load power depends on the relation t_{on}/t_{off} and is controlled by 22.11 Leg 1 Actual Ref:
	5	U α open loop control; phase angle control.
	6	U^2 α open loop control; phase angle control.
	7	I α control; phase angle control.
	8	I^2 α control; phase angle control.
	9	U α control; phase angle control.
	10	U^2 α control; phase angle control.
	11	P α control; phase angle control.
	12	Leg 1 External Ref 23.65; phase angle control.
99.25 Leg 2 Control Mode	Selection of control mode for leg 2. Default input for the reference is AI2 see Appendix Leg 2. See selection of 99.10 Leg 1 Control Mode.	
99.40 Leg 3 Control Mode	Selection of control mode for leg 3. Default input for the reference is AI3 see Appendix Leg 3. See selection of 99.10 Leg 1 Control Mode.	

Step 4/11: Basic settings for 3-phase mains and loads connected via transformer

3-phase mains and a transformer between the unit's output and the load.

Step 12: Common controlled loads, leg 2 and leg 3 follow leg 1 via transformer

99.04 Supply Configuration

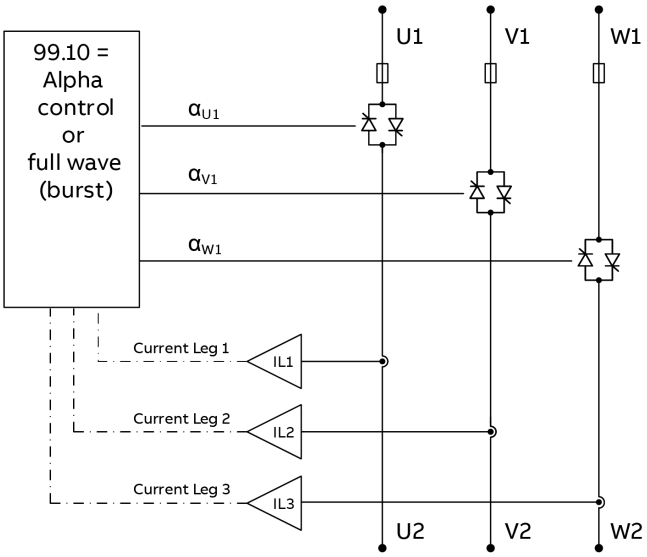

99.05 Load Configuration

SF_DCT_011_alpha-control_a.ai

Parameter	Parameter description/setting
99.01 Supply Voltage	Rated supply voltage.
99.02 Load current	Rated load current.
99.03 Load Voltage	Rated load voltage or voltage at primary side of the transformer, depending on what voltage should be controlled.
99.04 Supply Configuration	Describes the configuration at the input (U1, V1, W1) of the unit. For detailed description, see group 99.

0: 3ph UVW	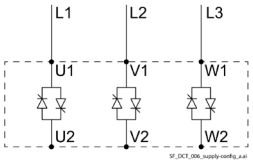	E.g., for units with 3 legs (W03).
1: 3ph UW eco	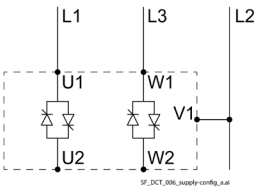	E.g., for units with 2 legs (W02).

99.05 Load Configuration	Describes the configuration at the output of the unit. For detailed description, see group 99.

5: 3ph transformer (3D/3S)	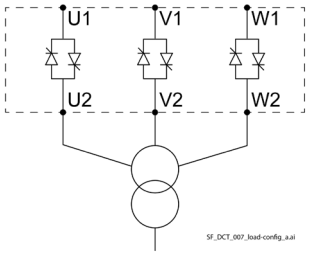	The load is connected via a 3-phase delta or star transformer.
6: 3ph transformer UV (6D)	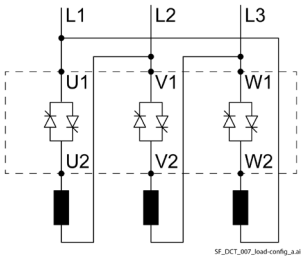	The load is connected via a 3-phase open delta transformer (clockwise phase connection U V W).
7: 3ph transformer UW (6D)	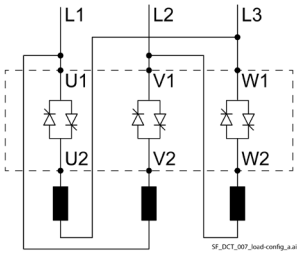	The load is connected via a 3-phase open delta transformer (anticlockwise phase connection U W V).
10: 3 x 1ph transformer loads	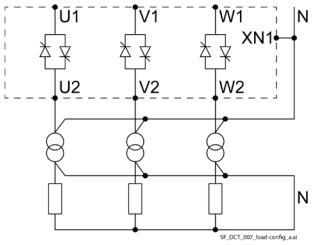	The loads are connected as single-phase loads via single-phase transformers.

99.10 Leg 1 Control Mode	Selection of control mode for leg 1. Default input for the reference is AI1 see Appendix Leg 1. For detailed description, see group 99.

2	Full wave fix cycle; full wave (burst) with fix cycle control. The load power depends on 22.11 Leg 1 Actual Ref and 99.11 Leg 1 Cycle Time.
5	U α open loop control; phase angle control.
6	U^2 α open loop control; phase angle control.
7	I α control; phase angle control.
8	I^2 α control; phase angle control.
9	U α control; phase angle control.
10	U^2 α control; phase angle control.
11	P α control; phase angle control.
12	Leg 1 External Ref 23.65; phase angle control.

99.25 Leg 2 Control Mode	Selection of control mode for leg 2.

13	Follow Leg 1; use the same control mode as leg 1.

99.40 Leg 3 Control Mode	Selection of control mode for leg 3. 13 Follow Leg 1; use the same control mode as leg 1.

Additional settings for 99.10 Leg 1 Control Mode = Full wave fix cycle (= 2) via transformer

Parameter	Parameter description/setting
99.12 Leg 1 Start Mode	Defines the start mode of leg 1. For detailed description, see group 99.
	1 First angle; for transformer loads. This prevents the high inrush current of transformers. The first thyristors are fired with the firing angle in 99.13 Leg 1 First Angle. 2 Soft start; at start the firing angle is moved from 180° … 0° using the number of periods in 99.14 Leg 1 Burst Soft Start Ramp. Switching OFF is done by setting the firing angle directly to 180°. 3 Soft start/soft down; at start the firing angle is moved from 180° … 0° using the number of periods in 99.14 Leg 1 Burst Soft Start Ramp. At switching OFF the firing angle is moved to 180° depending on 99.15 Leg 1 Burst Soft Down Ramp. 4 Soft start/first angle; see 1: First angle and 2: Soft start.
99.13 Leg 1 First Angle	Starting angle for leg 1, mainly used for transformer loads. 90.0° is e.g., the phase shift between voltage and current of a transformer. **Note:** Recommended setting 75.0° … 115.0°.
99.14 Leg 1 Burst Soft Start Ramp	Soft start time in periods in which the firing angle is moved from 180° … 0°.
99.15 Leg 1 Burst Soft Down Ramp	Soft down ramp in periods in which the firing angle is moved from 0° … 180°.

Additional settings for 99.10 Leg 1 Control Mode = Alpha controls (= 5 … 12) via transformer

Parameter	Parameter description/setting
99.16 Leg 1 Phase Angle Soft Start Ramp	Soft start time in which the reference is ramped from 0 … 100 %.
99.17 Leg 1 Phase Angle Soft Down Ramp	Soft down time in which the reference is ramped from 100 … 0 %.

Step 4/11: Basic settings for 3-phase mains and loads connected via transformer

3-phase mains and a transformer between the unit's output and the load.

Step 13: Individual controlled loads, leg 1, leg 2 and leg 3 are independent via transformer

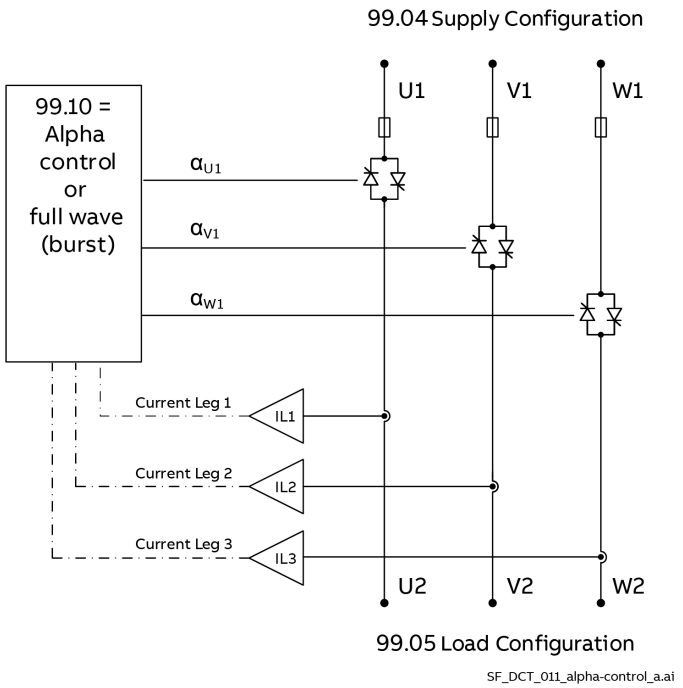

Parameter	Parameter description/setting
99.01 Supply Voltage … 99.05 Load Configuration see above.	
99.10 Leg 1 Control Mode	Selection of control mode for leg 1. Default input for the reference is AI1 see Appendix Leg 1. For detailed description, see group 99. 2 – Full wave fix cycle; full wave (burst) with fix cycle control. The load power depends on 22.11 Leg 1 Actual Ref and 99.11 Leg 1 Cycle Time. 5 – U α open loop control; phase angle control. 6 – U² α open loop control; phase angle control. 7 – I α control; phase angle control. 8 – I² α control; phase angle control. 9 – U α control; phase angle control. 10 – U² α control; phase angle control. 11 – P α control; phase angle control. 12 – Leg 1 External Ref 23.65; phase angle control.
99.25 Leg 2 Control Mode	Selection of control mode for leg 2. Default input for the reference is AI2 see Appendix Leg 2. See selection of 99.10 Leg 1 Control Mode.
99.40 Leg 3 Control Mode	Selection of control mode for leg 3. Default input for the reference is AI3 see Appendix Leg 3. See selection of 99.10 Leg 1 Control Mode.

Additional settings for 99.10 Leg 1 Control Mode = Full wave fix cycle (= 2) via transformer

Parameter	Parameter description/setting
Leg 1	
99.12 Leg 1 Start Mode	Defines the start mode of leg 1. For detailed description, see group 99.
	1 First angle; for transformer loads. This prevents the high inrush current of transformers. The first thyristors are fired with the firing angle in 99.13 Leg 1 First Angle. 2 Soft start; at start the firing angle is moved from 180° … 0° using the number of periods in 99.14 Leg 1 Burst Soft Start Ramp. Switching OFF is done by setting the firing angle directly to 180°. 3 Soft start/soft down; at start the firing angle is moved from 180° … 0° using the number of periods in 99.14 Leg 1 Burst Soft Start Ramp. At switching OFF the firing angle is moved to 180° depending on 99.15 Leg 1 Burst Soft Down Ramp. 4 Soft start/first angle; see 1: First angle and 2: Soft start.
99.13 Leg 1 First Angle	Starting angle for leg 1, mainly used for transformer loads. 90.0° is e.g., the phase shift between voltage and current of a transformer. **Note:** Recommended setting 75.0° … 115.0°.
99.14 Leg 1 Burst Soft Start Ramp	Soft start time in periods in which the firing angle is moved from 180° … 0°.
99.15 Leg 1 Burst Soft Down Ramp	Soft down ramp in periods in which the firing angle is moved from 0° … 180°.
Leg 2	
99.27 Leg 2 Start Mode	Defines the start mode of leg 2. For detailed description, see group 99.
	1 First angle; for transformer loads. This prevents the high inrush current of transformers. The first thyristors are fired with the firing angle in 99.28 Leg 2 First Angle. 2 Soft start; at start the firing angle is moved from 180° … 0° using the number of periods in 99.29 Leg 2 Burst Soft Start Ramp. Switching OFF is done by setting the firing angle directly to 180°. 3 Soft start/soft down; at start the firing angle is moved from 180° … 0° using the number of periods in 99.29 Leg 2 Burst Soft Start Ramp. At switching OFF the firing angle is moved to 180° depending on 99.30 Leg 2 Burst Soft Down Ramp. 4 Soft start/first angle; see 1: First angle and 2: Soft start.
99.28 Leg 2 First Angle	Starting angle for leg 2, mainly used for transformer loads. 90.0° is e.g., the phase shift between voltage and current of a transformer. **Note:** Recommended setting 75.0° … 115.0°.
99.29 Leg 2 Burst Soft Start Ramp	Soft start time in periods in which the firing angle is moved from 180° … 0°.
99.30 Leg 2 Burst Soft Down Ramp	Soft down ramp in periods in which the firing angle is moved from 0° … 180°.
Leg 3	
99.42 Leg 3 Start Mode	Defines the start mode of leg 3. For detailed description, see group 99.
	1 First angle; for transformer loads. This prevents the high inrush current of transformers. The first thyristors are fired with the firing angle in 99.43 Leg 3 First Angle.

	2	Soft start; at start the firing angle is moved from 180° … 0° using the number of periods in 99.44 Leg 3 Burst Soft Start Ramp. Switching OFF is done by setting the firing angle directly to 180°.
	3	Soft start/soft down; at start the firing angle is moved from 180° … 0° using the number of periods in 99.44 Leg 3 Burst Soft Start Ramp. At switching OFF the firing angle is moved to 180° depending on 99.45 Leg 3 Burst Soft Down Ramp.
	4	Soft start/first angle; see 1: First angle and 2: Soft start.
99.43 Leg 3 First Angle	Starting angle for leg 3, mainly used for transformer loads. 90.0° is e.g., the phase shift between voltage and current of a transformer. **Note:** Recommended setting 75.0° … 115.0°.	
99.44 Leg 3 Burst Soft Start Ramp	Soft start time in periods in which the firing angle is moved from 180° … 0°.	
99.45 Leg 3 Burst Soft Down Ramp	Soft down ramp in periods in which the firing angle is moved from 0° … 180°.	

Additional settings for 99.10 Leg 1 Control Mode = Alpha controls (= 5 … 12) via transformer

Parameter	**Parameter description/setting**
Leg 1	
99.16 Leg 1 Phase Angle Soft Start Ramp	Soft start time in which the reference is ramped from 0 … 100 %.
99.17 Leg 1 Phase Angle Soft Down Ramp	Soft down time in which the reference is ramped from 100 … 0 %.
Leg 2	
99.31 Leg 2 Phase Angle Soft Start Ramp	Soft start time in which the reference is ramped from 0 … 100 %.
99.32 Leg 2 Phase Angle Soft Down Ramp	Soft down time in which the reference is ramped from 100 … 0 %.
Leg 3	
99.46 Leg 3 Phase Angle Soft Start Ramp	Soft start time in which the reference is ramped from 0 … 100 %.
99.47 Leg 3 Phase Angle Soft Down Ramp	Soft down time in which the reference is ramped from 100 … 0 %.

Step 8/14: Basic settings for single-phase mains and loads connected via transformer

Single-phase mains and a transformer between the unit's output and the load.

Step 15: Individual controlled loads, leg 1, leg 2 and leg 3 are independent via transformer

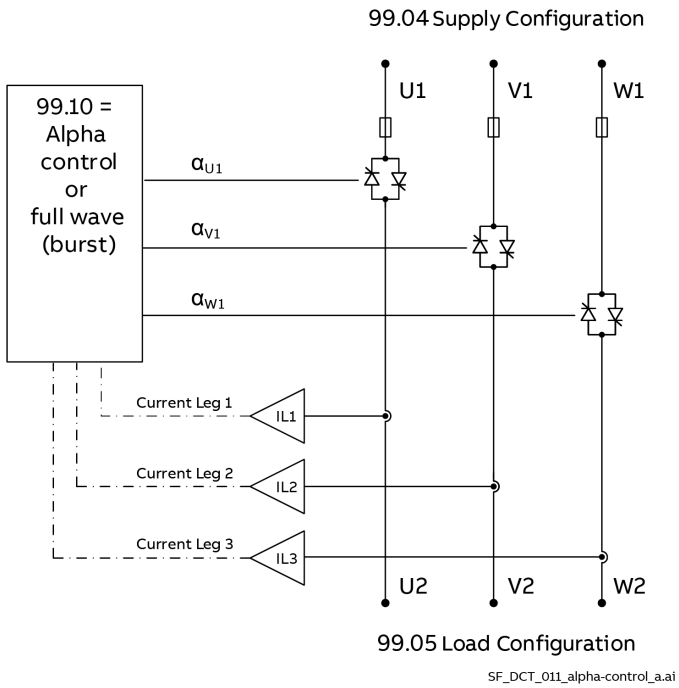

Parameter	Parameter description/setting
99.01 Supply Voltage	Rated supply voltage.
99.02 Load current	Rated load current.
99.03 Load Voltage	Rated load voltage.
99.04 Supply Configuration	Describes the configuration at the input (U1, V1, W1) of the unit. For detailed description, see group 99.
2: 3 x 1ph + N	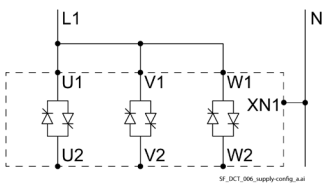 For units with 3 legs (W03) or 2 legs (W02) connected to single-phase mains.
99.05 Load Configuration	Describes the configuration at the output of the unit. For detailed description, see group 99.
6: 3ph transformer UV (6D)	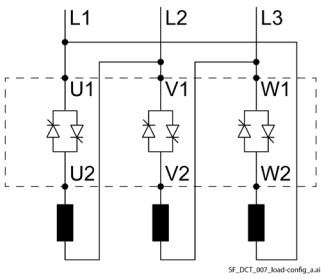 The load is connected via a 3-phase open delta transformer (clockwise phase connection U V W).

7: 3ph transformer UW (6D)	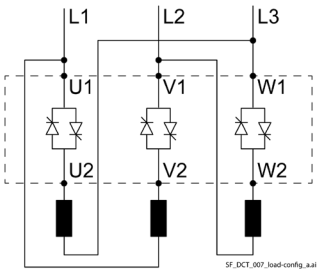	The load is connected via a 3-phase open delta transformer (anticlockwise phase connection U W V).
10: 3 x 1ph transformer loads	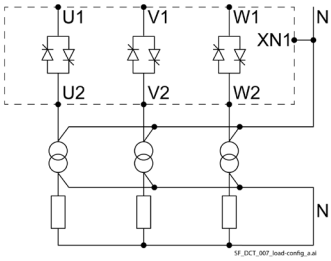	The loads are connected as single-phase loads via single-phase transformers.

99.10 Leg 1 Control Mode	Selection of control mode for leg 1. Default input for the reference is AI1 see Appendix Leg 1. For detailed description, see group 99. 2 – Full wave fix cycle; full wave (burst) with fix cycle control. The load power depends on 22.11 Leg 1 Actual Ref and 99.11 Leg 1 Cycle Time. 5 – U α open loop control; phase angle control. 6 – U^2 α open loop control; phase angle control. 7 – I α control; phase angle control. 8 – I^2 α control; phase angle control. 9 – U α control; phase angle control. 10 – U^2 α control; phase angle control. 11 – P α control; phase angle control. 12 – Leg 1 External Ref 23.65; phase angle control.
99.25 Leg 2 Control Mode	Selection of control mode for leg 2. Default input for the reference is AI2 see Appendix Leg 2. See selection of 99.10 Leg 1 Control Mode.
99.40 Leg 3 Control Mode	Selection of control mode for leg 3. Default input for the reference is AI3 see Appendix Leg 3. See selection of 99.10 Leg 1 Control Mode.

Additional settings for 99.10 Leg 1 Control Mode = Full wave fix cycle (= 2) via transformer

Parameter	Parameter description/setting
Leg 1	
99.12 Leg 1 Start Mode	Defines the start mode of leg 1. For detailed description, see group 99.
	1 – First angle; for transformer loads. This prevents the high inrush current of transformers. The first thyristors are fired with the firing angle in 99.13 Leg 1 First Angle. 2 – Soft start; at start the firing angle is moved from 180° … 0° using the number of periods in 99.14 Leg 1 Burst Soft Start Ramp. Switching OFF is done by setting the firing angle directly to 180°.

	3 Soft start/soft down; at start the firing angle is moved from 180° … 0° using the number of periods in 99.14 Leg 1 Burst Soft Start Ramp. At switching OFF the firing angle is moved to 180° depending on 99.15 Leg 1 Burst Soft Down Ramp. 4 Soft start/first angle; see 1: First angle and 2: Soft start.
99.13 Leg 1 First Angle	Starting angle for leg 1, used for transformer loads. 90.0° is e.g., the phase shift between voltage and current of a transformer. **Note:** Recommended setting 75.0° … 115.0°.
99.14 Leg 1 Burst Soft Start Ramp	Soft start time in periods in which the firing angle is moved from 180° … 0°.
99.15 Leg 1 Burst Soft Down Ramp	Soft down ramp in periods in which the firing angle is moved from 0° … 180°.
Leg 2	
99.27 Leg 2 Start Mode	Defines the start mode of leg 2. For detailed description, see group 99.
	1 First angle; for transformer loads. This prevents the high inrush current of transformers. The first thyristors are fired with the firing angle in 99.28 Leg 2 First Angle. 2 Soft start; at start the firing angle is moved from 180° … 0° using the number of periods in 99.29 Leg 2 Burst Soft Start Ramp. Switching OFF is done by setting the firing angle directly to 180°. 3 Soft start/soft down; at start the firing angle is moved from 180° … 0° using the number of periods in 99.29 Leg 2 Burst Soft Start Ramp. At switching OFF the firing angle is moved to 180° depending on 99.30 Leg 2 Burst Soft Down Ramp. 4 Soft start/first angle; see 1: First angle and 2: Soft start.
99.28 Leg 2 First Angle	Starting angle for leg 2, used for transformer loads. 90.0° is e.g., the phase shift between voltage and current of a transformer. **Note:** Recommended setting 75.0° … 115.0°.
99.29 Leg 2 Burst Soft Start Ramp	Soft start time in periods in which the firing angle is moved from 180° … 0°.
99.30 Leg 2 Burst Soft Down Ramp	Soft down ramp in periods in which the firing angle is moved from 0° … 180°.
Leg 3	
99.42 Leg 3 Start Mode	Defines the start mode of leg 3. For detailed description, see group 99.
	1 First angle; for transformer loads. This prevents the high inrush current of transformers. The first thyristors are fired with the firing angle in 99.43 Leg 3 First Angle. 2 Soft start; at start the firing angle is moved from 180° … 0° using the number of periods in 99.44 Leg 3 Burst Soft Start Ramp. Switching OFF is done by setting the firing angle directly to 180°. 3 Soft start/soft down; at start the firing angle is moved from 180° … 0° using the number of periods in 99.44 Leg 3 Burst Soft Start Ramp. At switching OFF the firing angle is moved to 180° depending on 99.45 Leg 3 Burst Soft Down Ramp. 4 Soft start/first angle; see 1: First angle and 2: Soft start.
99.43 Leg 3 First Angle	Starting angle for leg 3, used for transformer loads. 90.0° is e.g., the phase shift between voltage and current of a transformer. **Note:** Recommended setting 75.0° … 115.0°.

99.44 Leg 3 Burst Soft Start Ramp	Soft start time in periods in which the firing angle is moved from 180° … 0°.
99.45 Leg 3 Burst Soft Down Ramp	Soft down ramp in periods in which the firing angle is moved from 0° … 180°.

Additional settings for 99.10 Leg 1 Control Mode = Alpha controls (= 5 … 12) via transformer

Parameter	**Parameter description/setting**
Leg 1	
99.16 Leg 1 Phase Angle Soft Start Ramp	Soft start time in which the reference is ramped from 0 … 100 %.
99.17 Leg 1 Phase Angle Soft Down Ramp	Soft down time in which the reference is ramped from 100 … 0 %.
Leg 2	
99.31 Leg 2 Phase Angle Soft Start Ramp	Soft start time in which the reference is ramped from 0 … 100 %.
99.32 Leg 2 Phase Angle Soft Down Ramp	Soft down time in which the reference is ramped from 100 … 0 %.
Leg 3	
99.46 Leg 3 Phase Angle Soft Start Ramp	Soft start time in which the reference is ramped from 0 … 100 %.
99.47 Leg 3 Phase Angle Soft Down Ramp	Soft down time in which the reference is ramped from 100 … 0 %.

Step 16: Setting up the command chain

At factory setting (default) the command chain is set the following way (control via hardware, XDI):

	Leg 1	Leg 2	Leg 3
Enable command	19.01 = DI1	19.03 = DI1	19.05 = DI1
Run command	19.02 = DI2	19.04 = DI2	19.06 = DI2
Reset	19.15 = DI3		
Common control ①	19.30 = Separate		

① Selects, whether each leg is operating independent, or all legs are reacting to leg 1 Enable and Run commands.

The status of the digital inputs can be seen in 10.01 DI status.
For different settings use parameters in Group 19.

Step 17: Setting up the reference chain

At factory setting (default) analog inputs AI1 … AI3 are connected to the reference chain:

	Leg 1	**Leg 2 ②**	**Leg 3 ②**
Ref.	22.15 = AI1 scaled (12.12)	24.15 = AI1 scaled (12.12)	26.15 = AI1 scaled (12.12)

② Not valid in case of common control (99.25 Leg 2 Control Mode = 99.40 Leg 3 Control Mode = Follow Leg 1).

The value of the analog inputs can be seen in:

AI1	12.11 AI1 actual value	12.12 AI1 scaled value
AI2	12.21 AI2 actual value	12.22 AI2 scaled value
AI3	12.31 AI3 actual value	12.32 AI3 scaled value

For different settings use parameters in Groups 22, 24 and 26.

Connect digital inputs (XDI)

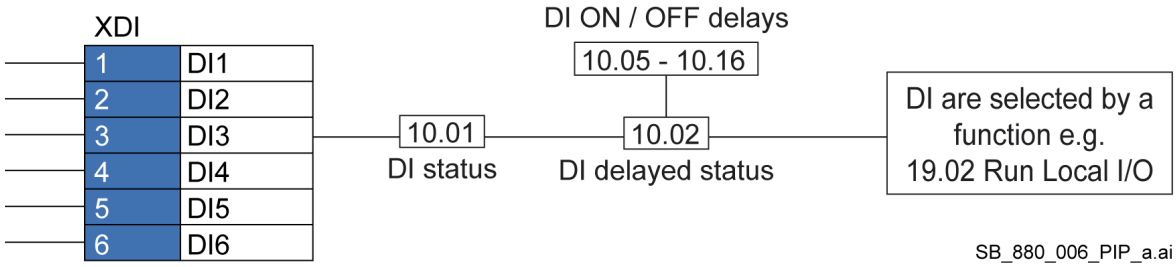

Connect relay outputs (XRO1 … XRO3)

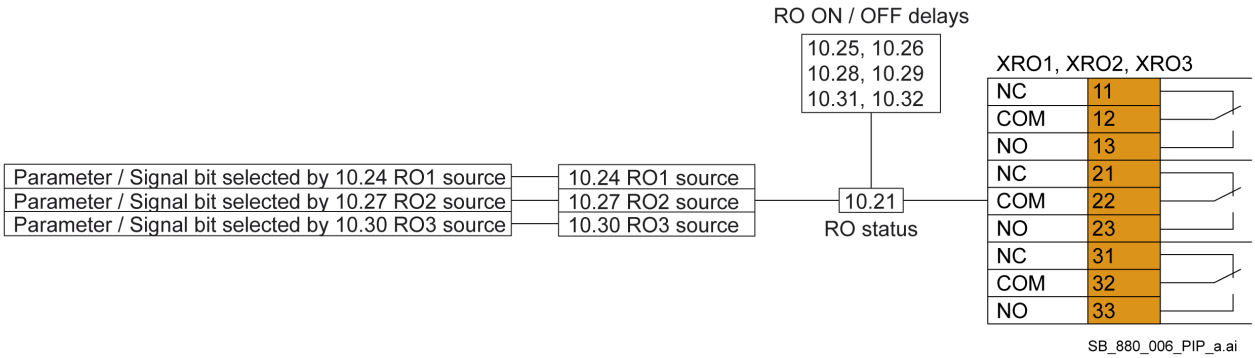

Other [bit]; bit source selection from the parameter/signal list
The value is taken from a specific bit of another parameter/signal. Choosing “Other” displays a parameter/signal list in which the user can choose the source parameter/signal and bit.
Example: Connect unit ‘no fault’ to RO2 with:
- No fault = 06.13.b01 Global Status Word bit 1 Any Fault- and
- RO2 = 10.27 RO2 source.

	Control panel	Drive Composer
1. The source for RO2 is connected via 10.27 RO2 source. 2. In 10.27 RO2 source choose Other:	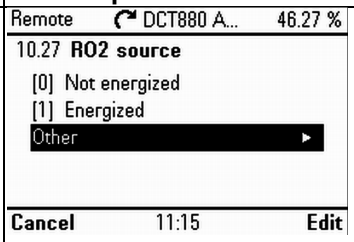	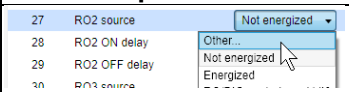
3. Choose group 6 Control and status words:	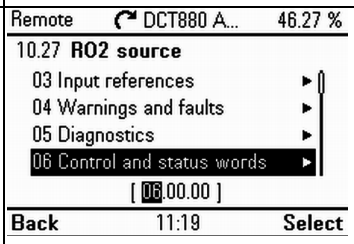	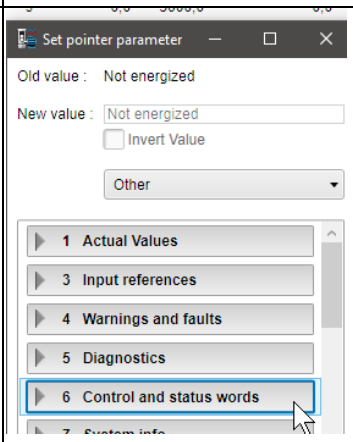
4. Choose 06.13 Global Status Word:	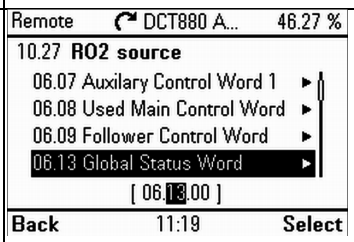	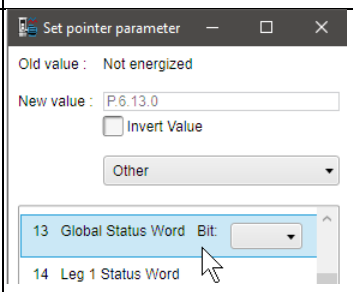
5. Choose 06.13 Global Status Word bit 1 Any Fault:	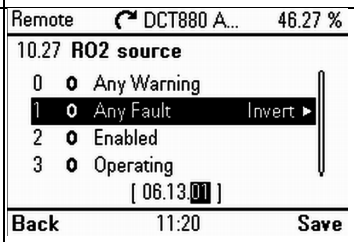	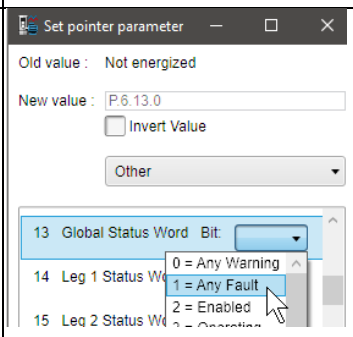

6. Choose invert to get ‘no fault’:	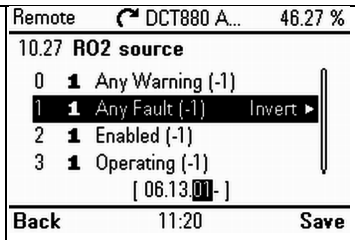	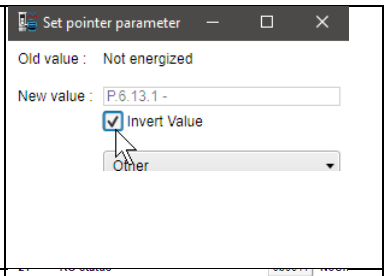
7. Result, see 10.27 RO2 source = 06.13.01 Any Fault (-1) or P.6.13.0-:	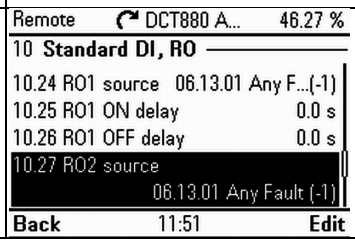	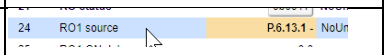

Connecting analog inputs (XAI)

AI1 connected to the reference chain of leg 1:

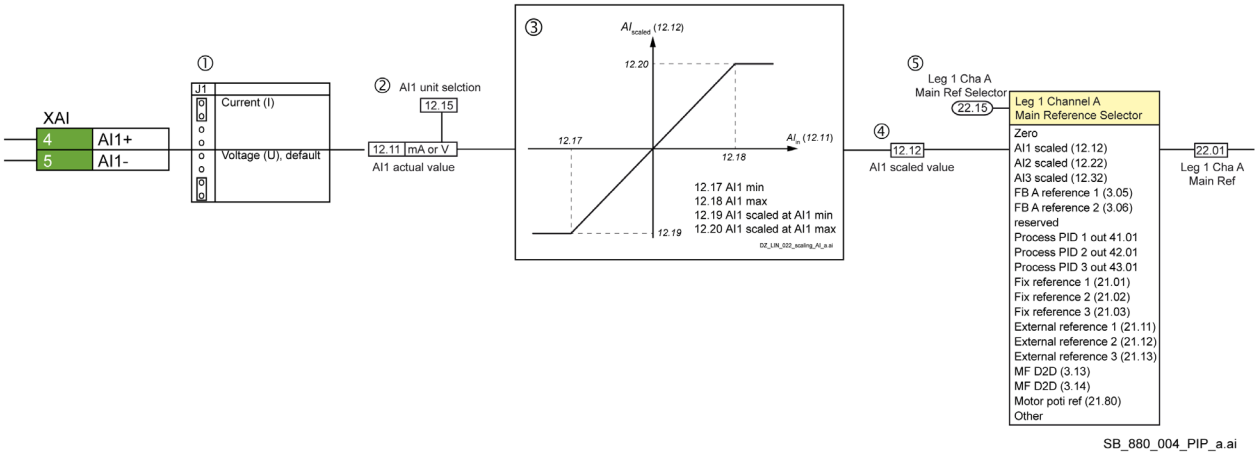

① Set jumper J1 to voltage or current depending on the desired input configuration.
② Set 12.15 AI1 unit selection to match the input configuration. 12.11 AI1 actual value displays the value of AI1 in mA or V.
③ Scale the analog input from voltage or current to the desired internal value.
④ 12.12 AI1 scaled value displays the value of AI1 after scaling.
⑤ 22.15 Leg 1 Cha A Main Ref Selector selects the source for the reference.

Connecting analog outputs (XAO)

AO1 connected to a parameter/signal value:

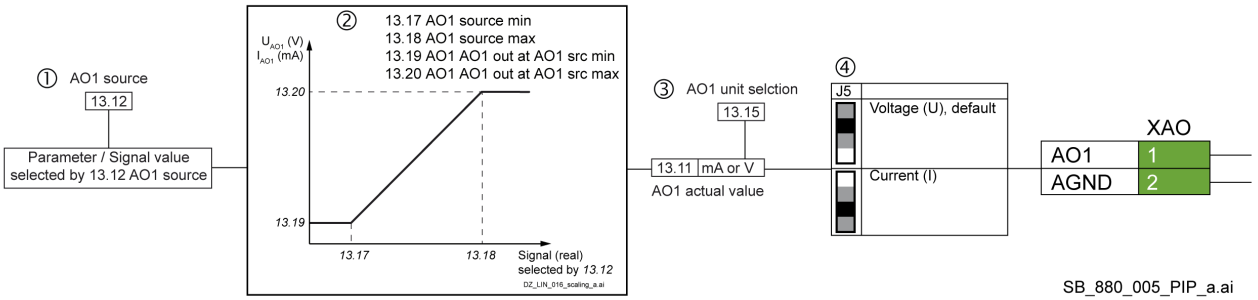

① 13.12 AO1 source selects the desired parameter/signal value (preferred: relative values in %).
② Scale the analog output from the internal value to voltage or current.
③ Set 13.15 AO1 unit selection to match the output configuration. 13.11 AO1 actual value displays the value of AO1 in mA or V.
④ Set jumper J5 to voltage or current depending on the desired output configuration.

Other; word source selection from the parameter/signal list
The value is taken from another parameter/signal. Choosing “Other” displays a parameter/signal list in which the user can choose the source parameter/signal.
Example: Connect unit 3-phase actual current to AO1 with:
– 3-phase actual current = 01.36 3ph Current RMS actual and
– AO1 = 13.12 AO1 source.

	Control panel	Drive Composer
1. The source for AO1 is connected via 13.12 AO1 source. 2. In 13.12 AO1 source choose Other:	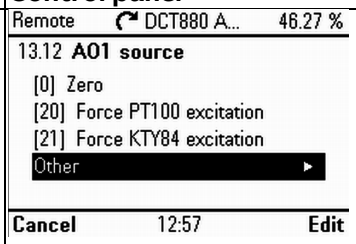	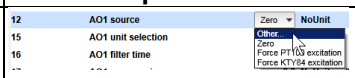
3. Choose group 1 Actual values:	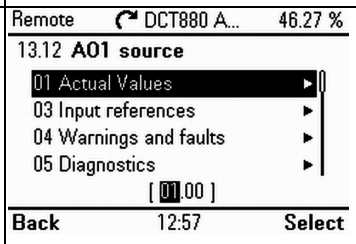	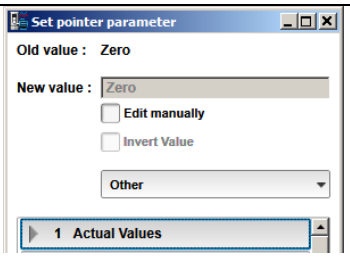
4. Choose 01.36 3ph Current RMS actual:	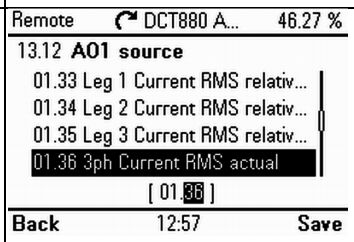	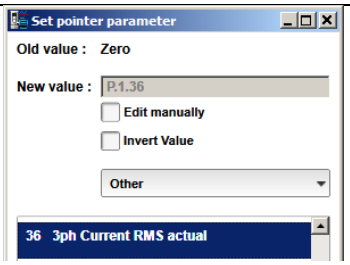
5. Result, see 13.12 AO1 source = 01.36 3ph Current RMS actual or P.1.36:	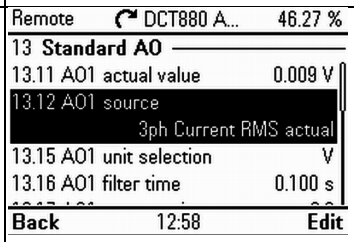	

Step 18: Run the operation check

Perform the operation check.

1. Make sure no faults or warnings are present. See 06.13 Global Status Word.
2. Remember settings of:
   99.10 Leg 1 Control Mode.
   99.25 Leg 2 Control Mode.
   99.40 Leg 3 Control Mode.
3. For common controlled loads (leg 2 and leg 3 follow leg 1) set:
   99.10 Leg 1 Control Mode = U α open loop control (= 5); phase angle control.
   99.25 Leg 2 Control Mode = Follow Leg 1 (= 13); use the same control mode as leg 1.
   99.40 Leg 3 Control Mode = Follow Leg 1 (= 13); use the same control mode as leg 1.
   For individual controlled loads (leg 1, leg 2 and leg 3 are independent) set:
   99.10 Leg 1 Control Mode = U α open loop control (= 5); phase angle control.
   99.25 Leg 2 Control Mode = U α open loop control (= 5); phase angle control.
   99.40 Leg 3 Control Mode = U α open loop control (= 5); phase angle control.
4. Make sure, all references are set to zero:
   23.01 Leg 1 Main Ref (22.11).
   25.01 Leg 2 Main Ref (24.11), only for individual controlled loads.
   27.01 Leg 3 Main Ref (26.11), only for individual controlled loads.
5. Give the Enable command and then Run command. See 06.08 Used Main Control Word.
   Note: For individual controlled loads do this for each leg separately.
6. Increase the reference.
   Note: For individual controlled loads do this for each leg separately.
7. Check the load currents:
   01.30 Leg 1 Current RMS actual.
   01.31 Leg 2 Current RMS actual.
   01.32 Leg 3 Current RMS actual.
   Notes:
   For common controlled loads make sure the three currents are symmetrical.
   For individual controlled loads do this for each leg separately.
8. Set all references back to zero.
9. To switch off remove the Run command and then Enable command. See 06.08 Used Main Control Word.
   Note: For individual controlled loads do this for all legs.
10. Set 99.10 Leg 1 Control Mode, 99.25 Leg 2 Control Mode and 99.40 Leg 3 Control Mode back to the original values.
11. Test the unit using the desired modes in 99.10 Leg 1 Control Mode, 99.25 Leg 2 Control Mode and 99.40 Leg 3 Control Mode.

Communication

What this chapter contains

This chapter describes the communication capabilities of the unit.

Commissioning and maintenance tools

Connect a DCT880 and a PC running Drive Composer

Via control panel

To establish a connection between Drive Composer and unit, connect a USB type A (PC) type mini-B (control panel) cable to the USB port of the PC and the USB port of the control panel. The maximum length of the USB cable should be 3 m.

Attention: The control panel is **not** part of the standard delivery. It needs to be added using either plus code +J404 ACS-AP-I or +J429 ACS-AP-W.

Drive Composer Start-up and maintenance PC tool User's manual (3AUA0000094606).

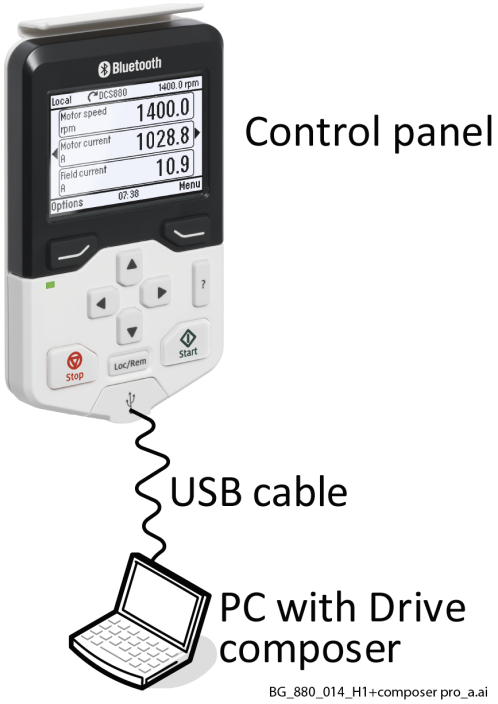

Via an Ethernet network (FENA-x1)

The Ethernet connection is made using FENA-x1 Ethernet adapter modules. For the installation of the adapter module, see FENA-11/-21 Ethernet adapter module user's manual (3AUA0000093568).

Additional information (e.g., parameter settings) can be found in the Drive Composer Start-up and maintenance PC tool User's manual (3AUA0000094606).

Attention: Please consider the following, when connecting Drive Composer pro via an Ethernet network.

- The communication supervision is not made in group 50 Fieldbus adapter (FBA), but in group 49 Panel port communication.
- To have communication supervision at all, 49.05 Communication loss action must **not** be set to No action.
- The timeout is set with 49.04 Communication loss time. Time outs of 2000 ms (default is 1000 ms) are sufficient.
- Any changed parameters must be validated by means of 49.06 Refresh settings = Refresh.

DDCS controller interface

General

The unit can be connected to a DDCS controller, such as the ABB AC 800M, using fiber optics. The DCT880 is compatible with both the ModuleBus and DriveBus connections.
Note: Some features of the DriveBus, such as BusManager, are not supported.

Topology

An example connection using fiber optic cables is shown below.
The units require an additional FDCO-0x DDCS communication module. Ring and star configurations are possible.

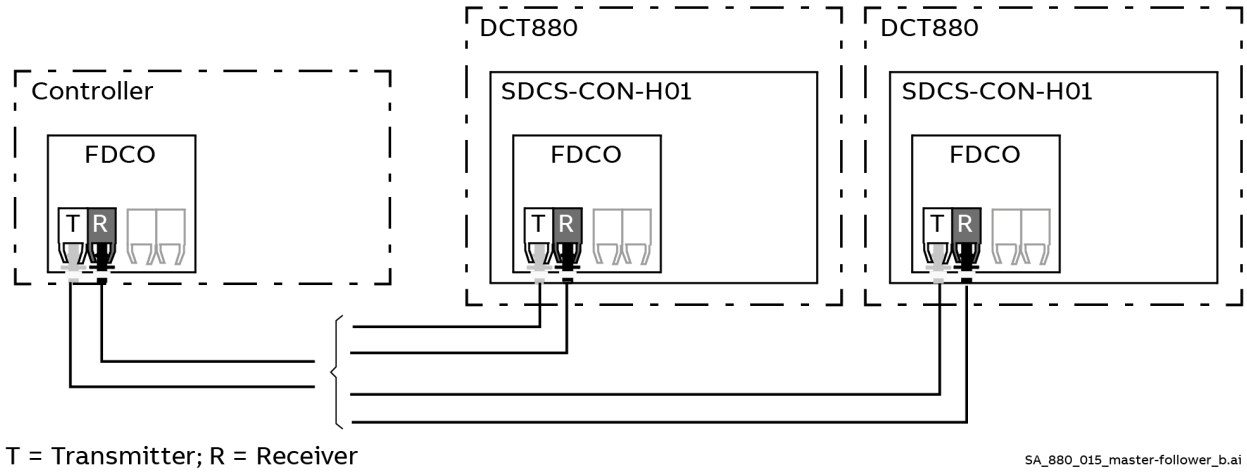

The selection of the connection is made by 60.51 DDCS controller comm port.
The transfer rate can be selected by 60.56 DDCS controller baud rate.

Communication

The communication between the controller and the unit consists of data sets of three 16-bit words each. The controller sends a data set to the unit, which returns the next data set to the controller.
The communication uses data sets 1 … 4, 10 … 25 and data sets 32, 33. The contents of the data sets are freely configurable, but data set 10 typically contains the control word and one or two references, while data set 11 returns the status word and selected actual values.
For ModuleBus communication, the DCT880 can be set up as an ABB standard drive or as an ABB engineered drive by 60.50 DDCS controller drive type. ModuleBus communication uses data sets 1 … 4 with an ABB standard drive and data sets 10 … 25 and data sets 32, 33 with an ABB engineered drive.
The word from the controller that is defined as the control word, e.g., 62.51 Data set 10 data 1 selection = CW 16bit, is send to 06.10 DDCS control word. The coding of the bits is shown in 06.01 Main control word.
The word from the unit that is defined as the status word, e.g., 61.51 Data set 11 data 1 selection = SW 16bit, is send to the controller. The coding of the bits is shown in 06.13 Global Status Word.

Parameters

What this chapter contains

The chapter describes the parameters and signals of the firmware.

Terms and abbreviations

Term	Definition
Signal	Type of parameter that is the result of a measurement or calculation by the unit or contains status information. Most signals are read-only, but some (especially counter-type signals) can be reset.
Default (def.)	The default value of a parameter.
Scale/Fbeq16	16-bit fieldbus equivalent: The scaling between the value shown on the panel and the integer used in communication when a 16-bit value is selected for transmission to an external system. A dash (-) indicates that the parameter is not accessible in 16-bit format.
Other	The value is taken from another parameter. Choosing “Other” displays a parameter list in which the user can specify the source parameter.
Other [bit]	The value is taken from a specific bit in another parameter. Choosing “Other” displays a parameter list in which the user can specify the source parameter and bit.
Parameter	A user-adjustable operating instruction for the unit.
p.u.	Per unit

Summary of parameter groups

Group	Contents
1 Actual values	Basic signals for monitoring the unit.
3 Input references	Values of references received from various sources.
4 Warnings and faults	Information on warnings and faults that occurred last. For explanations of individual warning and fault codes, see chapter Fault tracing.
5 Diagnostics	Various run-time-type counters and measurements related to the unit’s maintenance.
6 Control and status word	The unit’s control, status, and event words.
7 System info	The unit’s hardware and firmware information.
10 Standard DI, RO	Configuration of digital inputs and relay outputs.
11 Standard DIO, FI, FO	Configuration of digital input/outputs and frequency inputs/outputs.
12 Standard AI	Configuration of standard analog inputs.
13 Standard AO	Configuration of standard analog outputs.
14 I/O extension module 1	Configuration of I/O extension module 1.
15 I/O extension module 2	Configuration of I/O extension module 2.
16 I/O extension module 3	Configuration of I/O extension module 3.
19 Start/Stop Mode	Selection of local and external control locations and operating modes.
21 General References	Includes fix-, external references and motor potentiometer settings.
22 Leg 1 Reference Chain	Leg 1 reference source selection.
23 Leg 1 Control Detailed	Leg 1 control chain includes ramps, current/voltage/power control, control mode selector and limiters.
24 Leg 2 Reference Chain	Leg 2 reference source selection.
25 Leg 2 Control Detailed	Leg 2 control chain includes ramps, current/voltage/power control, control mode selector and limiters.
26 Leg 3 Reference Chain	Leg 3 reference source selection.

27 Leg 3 Control Detailed	Leg 3 control chain includes ramps, current/voltage/power control, control mode selector and limiters.
28 Unit Faults	Configuration of external events, selection of behavior of the thyristor power controller upon fault situations.
29 Multitap	Configuration when using a transformer with multitaps.
30 Leg 1 Limits	Thyristor power controller operation limits.
31 Leg 2 Limits	Thyristor power controller operation limits.
32 Leg 3 Limits	Thyristor power controller operation limits.
33 Maintenance timer & counter	Configuration of maintenance timers/counters.
35 Thermal Measurement	Temperature measurement configuration.
36 Leg 1 Load monitoring	Load resistance measurement, load loss function and overload function.
37 Leg 2 Load monitoring	Load resistance measurement, load loss function and overload function.
38 Leg 3 Load monitoring	Load resistance measurement, load loss function and overload function.
41 Process PID 1	Parameter values for process PID 1.
42 Process PID 2	Parameter values for process PID 2.
43 Process PID 3	Parameter values for process PID 3.
47 Data storage	Data storage parameters that can be written to and read from using other parameters.
49 Panel port communication	Communication settings for the control panel port of the unit.
50 Fieldbus adapter (FBA)	Fieldbus communication configuration.
51 FBA A settings	Fieldbus adapter A configuration.
52 FBA A data in	Selection of data sent by fieldbus adapter A to the master (e.g., PLC).
53 FBA A data out	Selection of data sent by the master (e.g., PLC) to fieldbus adapter A.
54 FBA B settings	Fieldbus adapter B configuration.
55 FBA B data in	Selection of data sent by fieldbus adapter B to the master (e.g., PLC).
56 FBA B data out	Selection of data sent by the master (e.g., PLC) to fieldbus adapter B.
58 Embedded fieldbus	Embedded fieldbus configuration.
60 DDCS communication	DDCS (fiber optic) communication configuration.
61 D2D and DDCS transmit data	Defines the data sent from the unit to the DDCS/D2D link.
62 D2D and DDCS receive data	Defines the data sent from the DDCS/D2D link to the unit.
95 HW configuration	Various hardware-related settings.
96 System	Language selection; access levels; macro selection; parameter save and restore; unit reboot; user parameter sets; unit selection.
99 Basic Settings	Unit configuration settings.

Parameter listing

1 Actual Values

Basic signals for monitoring the unit.

Index	Name						
	Text						
	Range	**Default**	**Unit**	**Scale/ FbEq16**	**Volatile**	**Change running**	**Type**
01.01	**Voltage U1 – N actual**						
	Actual phase voltage U1 – N.						
	0.0 … 3250.0	-	V	10 = 1 V	y	n	Signal
01.02	**Voltage V1 – N actual**						
	Actual phase voltage V1 – N.						

Index	Name						
	Text						
	Range	**Default**	**Unit**	**Scale/ FbEq16**	**Volatile**	**Change running**	**Type**
	0.0 … 3250.0	-	V	10 = 1 V	y	n	Signal
01.03	**Voltage W1 – N actual**						
	Actual phase voltage W1 – N.						
	0.0 … 3250.0	-	V	10 = 1 V	y	n	Signal
01.04	**Voltage U1 – N relative actual**						
	Relative actual phase voltage U1 – N. In percent of 99.01 Supply Voltage.						
	0.00 … 325.00	-	%	100 = 1 %	y	n	Signal
01.05	**Voltage V1 – N relative actual**						
	Relative actual phase voltage V1 – N. In percent of 99.01 Supply Voltage.						
	0.00 … 325.00	-	%	100 = 1 %	y	n	Signal
01.06	**Voltage W1 – N relative actual**						
	Relative actual phase voltage W1 – N. In percent of 99.01 Supply Voltage.						
	0.00 … 325.00	-	%	100 = 1 %	y	n	Signal
01.07	**Voltage U1 – V1 actual**						
	Actual phase-to-phase voltage U1 – V1.						
	0.0 … 3250.0	-	V	10 = 1 V	y	n	Signal
01.08	**Voltage V1 – W1 actual**						
	Actual phase-to-phase voltage V1 – W1.						
	0.0 … 3250.0	-	V	10 = 1 V	y	n	Signal
01.09	**Voltage W1 – U1 actual**						
	Actual phase-to-phase voltage W1 – U1.						
	0.0 … 3250.0	-	V	10 = 1 V	y	n	Signal
01.10	**Voltage U1 – V1 relative actual**						
	Relative actual phase-to-phase voltage U1 – V1. In percent of 99.01 Supply Voltage.						
	0.00 … 325.00	-	%	100 = 1 %	y	n	Signal
01.11	**Voltage V1 – W1 relative actual**						
	Relative actual phase-to-phase voltage V1 – W1. In percent of 99.01 Supply Voltage.						
	0.00 … 325.00	-	%	100 = 1 %	y	n	Signal
01.12	**Voltage W1 – U1 relative actual**						
	Relative actual phase-to-phase voltage W1 – U1. In percent of 99.01 Supply Voltage.						
	0.00 … 325.00	-	%	100 = 1 %	y	n	Signal
01.13	**Voltage U2 – N actual**						
	Actual phase voltage U2 – N. Measured or calculated depending on 99.60 Voltage Measurement Configuration.						
	0.0 … 3250.0	-	V	10 = 1 V	y	n	Signal
01.14	**Voltage V2 – N actual**						
	Actual phase voltage V2 – N. Measured or calculated depending on 99.60 Voltage Measurement Configuration.						
	0.0 … 3250.0	-	V	10 = 1 V	y	n	Signal
01.15	**Voltage W2 – N actual**						
	Actual phase voltage W2 – N. Measured or calculated depending on 99.60 Voltage Measurement Configuration.						
	0.0 … 3250.0	-	V	10 = 1 V	y	n	Signal

Index	Name						
	Text						
	Range	Default	Unit	Scale/ FbEq16	Volatile	Change running	Type
01.16	**Voltage U2 – N relative actual**						
	Relative actual phase voltage U2 – N. In percent of 99.03 Load Voltage. Measured or calculated depending on 99.60 Voltage Measurement Configuration.						
	0.00 … 325.00	-	%	100 = 1 %	y	n	Signal
01.17	**Voltage V2 – N relative actual**						
	Relative actual phase voltage V2 – N. In percent of 99.03 Load Voltage. Measured or calculated depending on 99.60 Voltage Measurement Configuration.						
	0.00 … 325.00	-	%	100 = 1 %	y	n	Signal
01.18	**Voltage W2 – N relative actual**						
	Relative actual phase voltage W2 – N. In percent of 99.03 Load Voltage. Measured or calculated depending on 99.60 Voltage Measurement Configuration.						
	0.00 … 325.00	-	%	100 = 1 %	y	n	Signal
01.20	**Voltage U2 – V2 actual**						
	Actual phase-to-phase voltage U2 – V2. Measured or calculated depending on 99.60 Voltage Measurement Configuration.						
	0.0 … 3250.0	-	V	10 = 1 V	y	n	Signal
01.21	**Voltage V2 – W2 actual**						
	Actual phase-to-phase voltage U2 – W2. Measured or calculated depending on 99.60 Voltage Measurement Configuration.						
	0.0 … 3250.0	-	V	10 = 1 V	y	n	Signal
01.22	**Voltage W2 – U2 actual**						
	Actual phase-to-phase voltage V2 – W2. Measured or calculated depending on 99.60 Voltage Measurement Configuration.						
	0.0 … 3250.0	-	V	10 = 1 V	y	n	Signal
01.23	**Voltage U2 – V2 relative actual**						
	Relative actual phase-to-phase voltage U2 – V2. In percent of 99.03 Load Voltage. Measured or calculated depending on 99.60 Voltage Measurement Configuration.						
	0.00 … 325.00	-	%	100 = 1 %	y	n	Signal
01.24	**Voltage V2 – W2 relative actual**						
	Relative actual phase-to-phase voltage U2 – W2. In percent of 99.03 Load Voltage. Measured or calculated depending on 99.60 Voltage Measurement Configuration.						
	0.00 … 325.00	-	%	100 = 1 %	y	n	Signal
01.25	**Voltage W2 – U2 relative actual**						
	Relative actual phase-to-phase voltage V2 – W2. In percent of 99.03 Load Voltage. Measured or calculated depending on 99.60 Voltage Measurement Configuration.						
	0.00 … 325.00	-	%	100 = 1 %	y	n	Signal
01.26	**Mains Voltage Leg 1 relative**						
	Relative mains voltage leg 1/U1. In percent of 99.01 Supply Voltage.						
	0.00 … 325.00	-	%	100 = 1 %	y	n	Signal
01.27	**Mains Voltage Leg 2 relative**						
	Relative mains voltage leg 2/V1. In percent of 99.01 Supply Voltage.						
	0.00 … 325.00	-	%	100 = 1 %	y	n	Signal

Index	Name						
	Text						
	Range	Default	Unit	Scale/ FbEq16	Volatile	Change running	Type
01.28	**Mains Voltage Leg 3 relative**						
	Relative mains voltage leg 3/W1. In percent of 99.01 Supply Voltage.						
	0.00 … 325.00	-	%	100 = 1 %	y	n	Signal
01.30	**Leg 1 Current RMS actual**						
	Actual RMS current leg 1/U2.						
	0.0 … 30000.0	-	A	1 = 1 A	y	n	Signal
01.31	**Leg 2 Current RMS actual**						
	Actual RMS current leg 2/V2.						
	0.0 … 30000.0	-	A	1 = 1 A	y	n	Signal
01.32	**Leg 3 Current RMS actual**						
	Actual RMS current leg 3/W2.						
	0.0 … 30000.0	-	A	1 = 1 A	y	n	Signal
01.33	**Leg 1 Current RMS relative actual**						
	Actual RMS current leg 1/U2 relative. In percent of 99.02 Load Current.						
	0.00 … 325.00	-	%	100 = 1 %	y	n	Signal
01.34	**Leg 2 Current RMS relative actual**						
	Actual RMS current leg 2/V2 relative. In percent of 99.02 Load Current.						
	0.00 … 325.00	-	%	100 = 1 %	y	n	Signal
01.35	**Leg 3 Current RMS relative actual**						
	Actual RMS current leg 3/W2 relative. In percent of 99.02 Load Current.						
	0.00 … 325.00	-	%	100 = 1 %	y	n	Signal
01.36	**3ph Current RMS actual**						
	Average actual three phase RMS current. Sum of 01.30 Leg 1 Current RMS actual, 01.31 Leg 2 Current RMS actual and 01.32 Leg 3 Current RMS actual divided by three: $\frac{01.30 + 01.31 + 01.32}{3}$						
	0.0 … 30000.0	-	A	1 = 1 A	y	n	Signal
01.37	**3ph Current RMS relative actual**						
	Average actual three phase RMS current relative. Sum of 01.33 Leg 1 Current RMS relative actual, 01.34 Leg 2 Current RMS relative actual and 01.35 Leg 3 Current RMS relative actual divided by three: $\frac{01.33 + 01.34 + 01.35}{3}$						
	0.00 … 325.00	-	%	100 = 1 %	y	n	Signal
01.40	**Leg 1 Alpha actual**						
	Actual firing angle leg 1/U1.						
	0.0 … 180.0	-	°	10 = 1°	y	n	Signal
01.42	**Leg 2 Alpha actual**						
	Actual firing angle leg 2/V1.						
	0.0 … 180.0	-	°	10 = 1°	y	n	Signal
01.44	**Leg 3 Alpha actual**						

Index	Name						
	Text						
	Range	**Default**	**Unit**	**Scale/ FbEq16**	**Volatile**	**Change running**	**Type**
	Actual firing angle leg 3/W1.						
	0.0 … 180.0	-	°	10 = 1°	y	n	Signal
01.50	**Leg 1 Power actual**						
	Actual power leg 1/U2. Measured or calculated depending on 99.60 Voltage Measurement Configuration.						
	0.0 … 5000.0	-	kW	1 = 1 kW	y	n	Signal
01.51	**Leg 2 Power actual**						
	Actual power leg 2/V2. Measured or calculated depending on 99.60 Voltage Measurement Configuration.						
	0.0 … 5000.0	-	kW	1 = 1 kW	y	n	Signal
01.52	**Leg 3 Power actual**						
	Actual power leg 3/W2. Measured or calculated depending on 99.60 Voltage Measurement Configuration.						
	0.0 … 5000.0	-	kW	1 = 1 kW	y	n	Signal
01.53	**Leg 1 Power relative actual**						
	Actual power leg 1/U2 relative. In percent of 99.09 Load Power. Measured or calculated depending on 99.60 Voltage Measurement Configuration.						
	0.00 … 325.00	-	%	100 = 1 %	y	n	Signal
01.54	**Leg 2 Power relative actual**						
	Actual power leg 2/V2 relative. In percent of 99.09 Load Power. Measured or calculated depending on 99.60 Voltage Measurement Configuration.						
	0.00 … 325.00	-	%	100 = 1 %	y	n	Signal
01.55	**Leg 3 Power relative actual**						
	Actual power leg 3/W2 relative. In percent of 99.09 Load Power. Measured or calculated depending on 99.60 Voltage Measurement Configuration.						
	0.00 … 325.00	-	%	100 = 1 %	y	n	Signal
01.56	**3ph Power actual**						
	Actual three phase power. Measured or calculated depending on 99.60 Voltage Measurement Configuration. Sum of 01.50 Leg 1 Power actual, 01.51 Leg 2 Power actual and 01.52 Leg 3 Power actual: 01.50 + 01.51 + 01.52						
	0.0 … 5000.0	-	kW	1 = 1 kW	y	n	Signal
01.57	**3ph Power relative actual**						
	Actual relative three phase power. Complete power of all connected loads in percent of 99.09 Load Power. Measured or calculated depending on 99.60 Voltage Measurement Configuration.						
	0.00 … 325.00	-	%	100 = 1 %	y	n	Signal
01.60	**Leg 1 Voltage RMS relative actual**						
	Leg 1/U2 actual relative RMS voltage. In percent of 99.03 Load Voltage. Measured or calculated depending on 99.60 Voltage Measurement Configuration.						
	0.00 … 325.00	-	%	100 = 1 %	y	n	Signal

Index	Name						
	Text						
	Range	Default	Unit	Scale/ FbEq16	Volatile	Change running	Type
01.61	**Leg 2 Voltage RMS relative actual**						
	Leg 2/V2 actual relative RMS voltage. In percent of 99.03 Load Voltage. Measured or calculated depending on 99.60 Voltage Measurement Configuration.						
	0.00 … 325.00	-	%	100 = 1 %	y	n	Signal
01.62	**Leg 3 Voltage RMS relative actual**						
	Leg 3/W2 actual relative RMS voltage. In percent of 99.03 Load Voltage. Measured or calculated depending on 99.60 Voltage Measurement Configuration.						
	0.00 … 325.00	-	%	100 = 1 %	y	n	Signal
01.65	**Peak Current Thyristor 11 relative**						
	Relative peak current of thyristor 11. In percent of 99.02 Load Current. For sinusoidal waveform is valid: All displayed values are multiplied by a factor of $\sqrt{2}$, thus e.g., 100 % load current is shown as 140 % in 01.65 Peak Current Thyristor 11 relative.						
	0.00 … 325.00	-	%	100 = 1 %	y	n	Signal
01.66	**Peak Current Thyristor 12 relative**						
	Relative peak current of thyristor 12. In percent of 99.02 Load Current. For sinusoidal waveform is valid: All displayed values are multiplied by a factor of $\sqrt{2}$, thus e.g., 100 % load current is shown as 140 % in 01.66 Peak Current Thyristor 12 relative.						
	0.00 … 325.00	-	%	100 = 1 %	y	n	Signal
01.67	**Peak Current Thyristor 13 relative**						
	Relative peak current of thyristor 13. In percent of 99.02 Load Current. For sinusoidal waveform is valid: All displayed values are multiplied by a factor of $\sqrt{2}$, thus e.g., 100 % load current is shown as 140 % in 01.67 Peak Current Thyristor 13 relative.						
	0.00 … 325.00	-	%	100 = 1 %	y	n	Signal
01.68	**Peak Current Thyristor 14 relative**						
	Relative peak current of thyristor 14. In percent of 99.02 Load Current. For sinusoidal waveform is valid: All displayed values are multiplied by a factor of $\sqrt{2}$, thus e.g., 100 % load current is shown as 140 % in 01.68 Peak Current Thyristor 14 relative.						
	0.00 … 325.00	-	%	100 = 1 %	y	n	Signal
01.69	**Peak Current Thyristor 15 relative**						
	Relative peak current of thyristor 15. In percent of 99.02 Load Current. For sinusoidal waveform is valid: All displayed values are multiplied by a factor of $\sqrt{2}$, thus e.g., 100 % load current is shown as 140 % in 01.69 Peak Current Thyristor 15 relative.						
	0.00 … 325.00	-	%	100 = 1 %	y	n	Signal
01.70	**Peak Current Thyristor 16 relative**						
	Relative peak current of thyristor 16. In percent of 99.02 Load Current. For sinusoidal waveform is valid:						

Index	Name						
	Text						
	Range	**Default**	**Unit**	**Scale/ FbEq16**	**Volatile**	**Change running**	**Type**
	All displayed values are multiplied by a factor of $\sqrt{2}$, thus e.g., 100 % load current is shown as 140 % in 01.70 Peak Current Thyristor 16 relative.						
	0.00 … 325.00	-	%	100 = 1 %	y	n	Signal
01.71	**AVR Current Thyristor 11 relative**						
	Average current of thyristor 11. In percent of 99.02 Load Current. For sinusoidal waveform is valid: All displayed values are multiplied by a factor of $\frac{2}{\pi}$, thus e.g., 100 % load current is shown as 64 % in 01.71 AVR Current Thyristor 11 relative.						
	-325.00 … 325.00	-	%	100 = 1 %	y	n	Signal
01.72	**AVR Current Thyristor 12 relative**						
	Average current of thyristor 12. In percent of 99.02 Load Current. For sinusoidal waveform is valid: All displayed values are multiplied by a factor of $\frac{2}{\pi}$, thus e.g., 100 % load current is shown as 64 % in 01.72 AVR Current Thyristor 12 relative.						
	-325.00 … 325.00	-	%	100 = 1 %	y	n	Signal
01.73	**AVR Current Thyristor 13 relative**						
	Average current of thyristor 13. In percent of 99.02 Load Current. For sinusoidal waveform is valid: All displayed values are multiplied by a factor of $\frac{2}{\pi}$, thus e.g., 100 % load current is shown as 64 % in 01.73 AVR Current Thyristor 13 relative.						
	-325.00 … 325.00	-	%	100 = 1 %	y	n	Signal
01.74	**AVR Current Thyristor 14 relative**						
	Average current of thyristor 14. In percent of 99.02 Load Current. For sinusoidal waveform is valid: All displayed values are multiplied by a factor of $\frac{2}{\pi}$, thus e.g., 100 % load current is shown as 64 % in 01.74 AVR Current Thyristor 14 relative.						
	-325.00 … 325.00	-	%	100 = 1%	y	n	Signal
01.75	**AVR Current Thyristor 15 relative**						
	Average current of thyristor 15. In percent of 99.02 Load Current. For sinusoidal waveform is valid: All displayed values are multiplied by a factor of $\frac{2}{\pi}$, thus e.g., 100 % load current is shown as 64 % in 01.75 AVR Current Thyristor 15 relative.						
	-325.00 … 325.00	-	%	100 = 1%	y	n	Signal
01.76	**AVR Current Thyristor 16 relative**						
	Average current of thyristor 16. In percent of 99.02 Load Current. For sinusoidal waveform is valid: All displayed values are multiplied by a factor of $\frac{2}{\pi}$, thus e.g., 100 % load current is shown as 64 % in 01.76 AVR Current Thyristor 16 relative.						
	-325.00 … 325.00	-	%	100 = 1 %	y	n	Signal
01.77	**Leg 1 Current real time relative**						
	Real time relative current leg 1/U2 sampled in 250 µs. In percent of 99.02 Load Current.						
	-325.00 … 325.00	-	%	100 = 1 %	y	n	Signal

Index	Name						
	Text						
	Range	Default	Unit	Scale/ FbEq16	Volatile	Change running	Type
01.78	**Leg 2 Current real time relative**						
	Real time relative current leg 2/V2 sampled in 250 µs. In percent of 99.02 Load Current.						
	-325.00 … 325.00	-	%	100 = 1 %	y	n	Signal
01.79	**Leg 3 Current real time relative**						
	Real time relative current leg 3/W2 sampled in 250 µs. In percent of 99.02 Load Current.						
	-325.00 … 325.00	-	%	100 = 1 %	y	n	Signal
01.80	**Leg 1 Reactive power relative**						
	Relative reactive power leg 1/U2. In percent of 99.09 Load Power. Measured or calculated depending on 99.60 Voltage Measurement Configuration.						
	-325.00 … 325.00	-	%	100 = 1 %	y	n	Signal
01.81	**Leg 2 Reactive power relative**						
	Relative reactive power leg 2/V2. In percent of 99.09 Load Power. Measured or calculated depending on 99.60 Voltage Measurement Configuration.						
	-325.00 … 325.00	-	%	100 = 1 %	y	n	Signal
01.82	**Leg 3 Reactive power relative**						
	Relative reactive power leg 3/W2. In percent of 99.09 Load Power. Measured or calculated depending on 99.60 Voltage Measurement Configuration.						
	-325.00 … 325.00	-	%	100 = 1 %	y	n	Signal
01.83	**3ph Reactive power relative**						
	Relative reactive power 3ph. Complete reactive power of all connected loads in percent of 99.09 Load Power. Measured or calculated depending on 99.60 Voltage Measurement Configuration.						
	-325.00 … 325.00	-	%	100 = 1 %	y	n	Signal
01.85	**Leg 1 Power Full Wave Fix Cycle actual**						
	Full wave fix cycle, actual average power leg 1/U2. Measured or calculated depending on 99.60 Voltage Measurement Configuration.						
	0.0 … 5000.0	-	kW	1 = 1 kW	y	n	Signal
01.86	**Leg 2 Power Full Wave Fix Cycle actual**						
	Full wave fix cycle, actual average power leg 2/V2. Measured or calculated depending on 99.60 Voltage Measurement Configuration.						
	0.0 … 5000.0	-	kW	1 = 1 kW	y	n	Signal
01.87	**Leg 3 Power Full Wave Fix Cycle actual**						
	Full wave fix cycle, actual average power leg 3/W2. Measured or calculated depending on 99.60 Voltage Measurement Configuration.						
	0.0 … 5000.0	-	kW	1 = 1 kW	y	n	Signal
01.88	**3ph Power Full Wave Fix Cycle actual**						
	Full wave fix cycle, actual average three phase power. Measured or calculated depending on 99.60 Voltage Measurement Configuration. Sum of 01.85 Leg 1 Power Full Wave Fix Cycle actual, 01.86 Leg 2 Power Full Wave Fix Cycle actual and 01.87 Leg 3 Power Full Wave Fix Cycle actual: 01.85 + 01.86 + 01.87						
	0.0 … 5000.0	-	kW	1 = 1 kW	y	n	Signal

Index	Name						
	Text						
	Range	**Default**	**Unit**	**Scale/ FbEq16**	**Volatile**	**Change running**	**Type**
01.89	**Leg 1 Power Full Wave Fix Cycle actual relative**						
	Full wave fix cycle, actual average relative power leg 1/U2. In percent of 99.09 Load Power. Measured or calculated depending on 99.60 Voltage Measurement Configuration.						
	0.00 … 325.00	-	%	100 = 1 %	y	n	Signal
01.90	**Leg 2 Power Full Wave Fix Cycle actual relative**						
	Full wave fix cycle, actual average relative power leg 2/V2. In percent of 99.09 Load Power. Measured or calculated depending on 99.60 Voltage Measurement Configuration.						
	0.00 … 325.00	-	%	100 = 1 %	y	n	Signal
01.91	**Leg 3 Power Full Wave Fix Cycle actual relative**						
	Full wave fix cycle, actual average relative power leg 3/W2. In percent of 99.09 Load Power. Measured or calculated depending on 99.60 Voltage Measurement Configuration.						
	0.00 … 325.00	-	%	100 = 1 %	y	n	Signal
01.92	**3ph Power Full Wave Fix Cycle actual relative**						
	Full wave fix cycle, actual average relative three phase power. Complete power of all connected loads in percent of 99.09 Load Power. Measured or calculated depending on 99.60 Voltage Measurement Configuration.						
	0.00 … 325.00	-	%	100 = 1 %	y	n	Signal
01.94	**3ph Residual current relative filtered**						
	Relative filtered residual current 3ph. Complete filtered residual current of all connected loads in percent of 99.02 Load Current. The value is calculated based on the current measurement in each leg. This signal is only valid: – For units size T1 … T5 (W02 only with a 3rd CT). – For 99.05 Load Configuration = 3ph star (3S) or 3ph delta (3D). – For 99.10 Leg 1 Control Mode = Full wave logic ON/OFF, Full wave fix cycle or Full wave variable cycle and 99.25 Leg 2 Control Mode = 99.40 Leg 3 Control Mode = Follow Leg 1. Optimal signal quality is achieved by setting 99.12 Leg 1 Start Mode = 99.27 Leg 2 Start Mode = 99.42 Leg 3 Start Mode = Normal. **Notes:** – For units with two legs (W02) 01.94 3ph Residual current relative filtered is only valid if all 3 phase currents are measured by a CT. Use plus code +S510 to add a 3rd CT. – 01.94 3ph Residual current relative filtered is not to be used for electrical safety. It is only valid for load monitoring purposes (isolation fault of the load).						
	0.00 … 325.00	-	%	100 = 1 %	y	n	Signal
01.95	**Quasi peak DC current**						
	Calculated peak DC current. The calculated peak DC current is based on the peak current of each of the six thyristors in percent of 99.02 Load Current. The scan time 500 µs. **Note:** Only valid when the DCT880 is used for the rotating rectifier of medium voltage motors.						
	0.00 … 325.00	-	%	100 = 1 %	y	n	Signal

3 Input references

Values of references received from various sources.

Index	Name						
	Text						
	Range	**Default**	**Unit**	**Scale FbEq16**	**Volatile**	**Change running**	**Type**
03.01	**Panel reference 1**						
	Reference 1 given from the control panel or PC tool. Reference 1 given from the control panel or PC tool (Drive Composer via USB) in percent of or temperature, nominal load current, load voltage or load power. See e.g., 35.07 Temp 1 max, 99.02 Load Current, 99.03 Load Voltage and 99.09 Load Power.						
	-325.00 … 325.00	-	%	100 = 1 %	y	n	Signal
03.03	**Ethernet PC tool reference 1**						
	Reference 1 given from PC tool. Reference 1 given from PC tool (Drive Composer via FENA) in percent of or temperature, nominal load current, load voltage or load power. See e.g., 35.07 Temp 1 max, 99.02 Load Current, 99.03 Load Voltage and 99.09 Load Power.						
	-325.00 … 325.00	-	%	100 = 1 %	y	n	Signal
03.05	**FBA A reference 1**						
	Reference 1 received via fieldbus adapter A. Reference 1 received via fieldbus adapter A (see parameters 53.01 … 53.12) in percent of or temperature, nominal load current, load voltage or load power. See e.g., 35.07 Temp 1 max, 99.02 Load Current, 99.03 Load Voltage and 99.09 Load Power. See also chapter Fieldbus control via a fieldbus adapter.						
	-325.00 … 325.00	-	%	100 = 1 %	y	n	Signal
03.06	**FBA A reference 2**						
	Reference 2 received via fieldbus adapter A. Reference 2 received via fieldbus adapter A (see parameters 53.01 … 53.12) in percent of or temperature, nominal load current, load voltage or load power. See e.g., 35.07 Temp 1 max, 99.02 Load Current, 99.03 Load Voltage and 99.09 Load Power.						
	-325.00 … 325.00	-	%	100 = 1 %	y	n	Signal
03.07	**FBA B reference 1**						
	Reference 1 received via fieldbus adapter B. Reference 1 received via fieldbus adapter B (see parameters 56.01 … 56.12) in percent of or temperature, nominal load current, load voltage or load power. See e.g., 35.07 Temp 1 max, 99.02 Load Current, 99.03 Load Voltage and 99.09 Load Power.						
	-325.00 … 325.00	-	%	100 = 1 %	y	n	Signal
03.08	**FBA B reference 2**						
	Reference 2 received via fieldbus adapter B. Reference 2 received via fieldbus adapter B (see parameters 56.01 … 56.12) in percent of or temperature, nominal load current, load voltage or load power. See e.g., 35.07 Temp 1 max, 99.02 Load Current, 99.03 Load Voltage and 99.09 Load Power.						
	-325.00 … 325.00	-	%	100 = 1 %	y	n	Signal
03.09	**EFB reference 1**						
	Reference 1 received via the embedded fieldbus. Reference 1 received via the embedded fieldbus (see parameters 58.101 … 58.124) in percent of or temperature, nominal load current, load voltage or load power. See e.g., 35.07 Temp 1 max, 99.02 Load Current, 99.03 Load Voltage and 99.09 Load Power.						
	-325.00 … 325.00	-	%	100 = 1 %	y	n	Signal
03.10	**EFB reference 2**						
	Reference 2 received via the embedded fieldbus. Reference 2 received via the embedded fieldbus (see parameters 58.101 … 58.124) in percent of or temperature, nominal load current, load voltage or load power. See e.g., 35.07 Temp 1 max, 99.02 Load Current, 99.03 Load Voltage and 99.09 Load Power.						

Index	Name						
	Text						
	Range	**Default**	**Unit**	**Scale FbEq16**	**Volatile**	**Change running**	**Type**
	-325.00 … 325.00	-	%	100 = 1 %	y	n	Signal
03.11	**DDCS controller ref 1**						
	Reference 1 received from an external DDCS-PLC. Reference 1 received from an external DDCS-PLC in percent of or temperature, nominal load current, load voltage or load power. See e.g., 35.07 Temp 1 max, 99.02 Load Current, 99.03 Load Voltage and 99.09 Load Power.						
	-325.00 … 325.00	-	%	100 = 1 %	y	n	Signal
03.12	**DDCS controller ref 2**						
	Reference 2 received from an external DDCS-PLC Reference 2 received from an external DDCS-PLC in percent of or temperature, nominal load current, load voltage or load power. See e.g., 35.07 Temp 1 max, 99.02 Load Current, 99.03 Load Voltage and 99.09 Load Power.						
	-325.00 … 325.00	-	%	100 = 1 %	y	n	Signal
03.13	**M/F or D2D ref1**						
	Master/follower reference 1 received from the master (followers only). Master/follower reference 1 received from the master (see parameters 61.01 … 62.03) in percent of or temperature, nominal load current, load voltage or load power. See e.g., 35.07 Temp 1 max, 99.02 Load Current, 99.03 Load Voltage and 99.09 Load Power. See also section Master/follower functionality.						
	-325.00 … 325.00	-	%	100 = 1 %	y	n	Signal
03.14	**M/F or D2D ref2**						
	Master/follower reference 2 received from the master (followers only). Master/follower reference 2 received from the master (see parameters 61.01 … 62.03) in percent of or temperature, nominal load current, load voltage or load power. See e.g., 35.07 Temp 1 max, 99.02 Load Current, 99.03 Load Voltage and 99.09 Load Power.						
	-325.00 … 325.00	-	%	100 = 1 %	y	n	Signal

4 Warnings and faults

Information on warnings and faults that occurred last. For explanations of individual warning and fault codes, see chapter Fault tracing.

Index	Name						
	Text						
	Range	**Default**	**Unit**	**Scale FbEq16**	**Volatile**	**Change running**	**Type**
04.01	**Tripping fault**						
	Code of the 1st active fault (the fault that caused the current trip).						
	0000h … FFFFh	-	-	1 = 1	y	n	Signal
04.02	**Active fault 2**						
	Code of the 2nd active fault.						
	0000h … FFFFh	-	-	1 = 1	y	n	Signal
04.03	**Active fault 3**						
	Code of the 3rd active fault.						
	0000h … FFFFh	-	-	1 = 1	y	n	Signal
04.04	**Active fault 4**						
	Code of the 4th active fault.						
	0000h … FFFFh	-	-	1 = 1	y	n	Signal
04.05	**Active fault 5**						
	Code of the 5th active fault.						
	0000h … FFFFh	-	-	1 = 1	y	n	Signal

Index	Name						
	Text						
	Range	Default	Unit	Scale FbEq16	Volatile	Change running	Type
04.06	**Active warning 1**						
	Code of the 1st active warning.						
	0000h … FFFFh	-	-	1 = 1	y	n	Signal
04.07	**Active warning 2**						
	Code of the 2nd active warning.						
	0000h … FFFFh	-	-	1 = 1	y	n	Signal
04.08	**Active warning 3**						
	Code of the 3rd active warning.						
	0000h … FFFFh	-	-	1 = 1	y	n	Signal
04.09	**Active warning 4**						
	Code of the 4th active warning.						
	0000h … FFFFh	-	-	1 = 1	y	n	Signal
04.10	**Active warning 5**						
	Code of the 5th active warning.						
	0000h … FFFFh	-	-	1 = 1	y	n	Signal
04.11	**Latest fault**						
	Code of the 1st stored (non-active) fault.						
	0000h … FFFFh	-	-	1 = 1	y	n	Signal
04.12	**2nd latest fault**						
	Code of the 2nd stored (non-active) fault.						
	0000h … FFFFh	-	-	1 = 1	y	n	Signal
04.13	**3rd latest fault**						
	Code of the 3rd stored (non-active) fault.						
	0000h … FFFFh	-	-	1 = 1	y	n	Signal
04.14	**4th latest fault**						
	Code of the 4th stored (non-active) fault.						
	0000h … FFFFh	-	-	1 = 1	y	n	Signal
04.15	**5th latest fault**						
	Code of the 5th stored (non-active) fault.						
	0000h … FFFFh	-	-	1 = 1	y	n	Signal
04.16	**Latest warning**						
	Code of the 1st stored (non-active) warning.						
	0000h … FFFFh	-	-	1 = 1	y	n	Signal
04.17	**2nd latest warning**						
	Code of the 2nd stored (non-active) warning.						
	0000h … FFFFh	-	-	1 = 1	y	n	Signal
04.18	**3rd latest warning**						
	Code of the 3rd stored (non-active) warning.						
	0000h … FFFFh	-	-	1 = 1	y	n	Signal
04.19	**4th latest warning**						
	Code of the 4th stored (non-active) warning.						
	0000h … FFFFh	-	-	1 = 1	y	n	Signal
04.20	**5th latest warning**						
	Code of the 5th stored (non-active) warning.						
	0000h … FFFFh	-	-	1 = 1	y	n	Signal
04.23	**Diagnostics**						
	Additional information on last event.						
	0 … 65535	-	-	1 = 1	y	n	Signal

5 Diagnostics

Various run-time-type counters and measurements related to the unit's maintenance.

Index	Name						
	Text						
	Range	**Default**	**Unit**	**Scale FbEq16**	**Volatile**	**Change running**	**Type**
05.01	**On-time counter**						
	On-time counter. The counter runs when the thyristor power controller is powered (24 V_{DC} is on).						
	0 … 65535	-	days	1 = 1 day	y	n	Signal
05.02	**Load run-time counter**						
	Load run-time counter. The counter runs when leg 1 thyristor power controller runs (load current is present).						
	0 … 65535	-	days	1 = 1 day	y	n	Signal
05.04	**Fan on-time counter**						
	Run time of the units cooling fan. Can be reset from the control panel by keeping Reset depressed for over 3 seconds. Will not be active with unit sizes T1 … T5.						
	0 … 65535	-	days	1 = 1 day	y	n	Signal
05.10	**Control board temperature**						
	Measured actual control board temperature						
	-60.0 … 1000.0	-	°C	10 = 1°C	y	n	Signal
05.50	**Power part temperature**						
	Measured actual power part temperature or measured power part temperature of the power unit connected to channel1 of the SDCS-DSL-H1x.						
	-60.0 … 1000.0	-	°C	10 = 1°C	y	n	Signal

6 Control and status words

The unit's control, status, and event words.

Index	Name						
	Text						
	Range	**Default**	**Unit**	**Scale FbEq16**	**Volatile**	**Change running**	**Type**
06.01	**Main control word**						
	Main control word. This signal shows the control signals as received from the selected sources (such as digital inputs, the fieldbus interfaces, and the application program), see 06.06 MCW Source. Bit assignment:						

Bit	Name	High	Low	Remarks
0	Leg 1 Enable	Enable	Disable	Mains contactor ON command. Fans ON command.
1	Leg 1 Run	Run	Stop	
2	Leg 2 Enable	Enable	Disable	Mains contactor ON command. Fans ON command.
3	Leg 2 Run	Run	Stop	
4	Leg 3 Enable	Enable	Disable	Mains contactor ON command. Fans ON command.
5	Leg 3 Run	Run	Stop	
6	reserved			
7	Reset	Reset	No action	
8	reserved			
9	reserved			

Index	Name						
	Text						
	Range	**Default**	**Unit**	**Scale FbEq16**	**Volatile**	**Change running**	**Type**

10	Remote CMD	Enable	No action	Overriding control/IEC programming enabled (overriding control/IEC programming has to set this bit to 1).
11 … 15	Bit 11 … 15			

Note: Bits 11 … 15 can be used to carry additional control data. Additionally, they can be used as a signal source by any binary-source selector parameter (see: Other [bit], source selection).

0000h … FFFFh	-	-	1 = 1	y	n	Signal
06.02	**Application control word**					
Control word written to by IEC programming.						
0000h … FFFFh	-	-	1 = 1	y	y	Parameter
06.03	**FBA A transparent control word**					
Transparent control word received via fieldbus adapter A, see parameters 53.01 … 53.12.						
0000h … FFFFh	-	-	1 = 1	y	n	Signal
06.04	**FBA B transparent control word**					
Transparent control word received via fieldbus adapter B, see parameters 56.01 … 56.12.						
0000h … FFFFh	-	-	1 = 1	y	n	Signal
06.05	**EFB transparent control word**					
Transparent control word received via embedded fieldbus, see parameters 58.101 … 58.124.						
0000h … FFFFh	-	-	1 = 1	y	n	Signal
06.06	**MCW Source**					
Selects the source for 06.01 Main control word active. Other; source selection. 0: **None**; inactive. 1: **FBA A (06.03)**; 06.03 FBA A CW. 2: **FBA B (06.04)**; 06.04 FBA B CW. 3: **EFB (06.05)**; 06.05 EFB CW. 4: **Application (06.02)**; 06.02 Application Control Word. 5: **D2D (06.94)**; 06.94 Follower Control Word received (follower only). 6: **DDCS CW (06.10)**; 06.10 DDCS control word.						
0 … 6	None	-	1 = 1	n	y	Parameter
06.07	**Auxiliary Control Word 1**					
First auxiliary control word. Bit assignment:						

Bit	Name	High	Low
0 … 15	reserved		

0000h … FFFFh	-	-	1 = 1	y	y	Parameter
06.08	**Used Main Control Word**					
Used main control word. Main control word used by the internal unit logic. Bit assignment:						

Bit	Name	High	Low	Remarks
0	Leg 1 Enable	Enable	Disable	Mains contactor ON command. Fans ON command.
1	Leg 1 Run	Run	Stop	
2	Leg 2 Enable	Enable	Disable	Mains contactor ON command.

Index	Name						
	Text						
	Range	Default	Unit	Scale FbEq16	Volatile	Change running	Type

				Fans ON command.
3	Leg 2 Run	Run	Stop	
4	Leg 3 Enable	Enable	Disable	Mains contactor ON command. Fans ON command.
5	Leg 3 Run	Run	Stop	
6	reserved			
7	Reset	Reset	No action	
8	reserved			
9	reserved			
10	Remote CMD	No action	No action	Not in use
11	Leg 1 Remote	Remote	No action	When high: Follower leg 1 is controlled by master (automatically set).
12	Leg 2 Remote	Remote	No action	When high: Follower leg 2 is controlled by master (automatically set).
13	Leg 3 Remote	Remote	No action	When high: Follower leg 3 is controlled by master (automatically set).
14 … 15	reserved			

0000h … FFFFh	-	-	1 = 1	y	n	Signal

06.09 Follower Control Word

Follower control word to followers (master only).
06.09 Follower Control Word is sent by the master, using D2D link, to 06.94 Follower Control Word received in all followers.
Bit assignment:

Bit	Name	High	Low	Remarks
0	Leg 1 Enable	Enable	Disable	Mains contactor ON command. Fans ON command.
1	Leg 1 Run	Run and no active fault in master	Stop or active fault in master	
2	Leg 2 Enable	Enable	Disable	Mains contactor ON command. Fans ON command.
3	Leg 2 Run	Run and no active fault in master	Stop or active fault in master	
4	Leg 3 Enable	Enable	Disable	Mains contactor ON command. Fans ON command.
5	Leg 3 Run	Run and no active fault in master	Stop or active fault in master	
6	reserved			
7	Reset	Reset	No action	
8	reserved			
9	reserved			
10	Remote CMD	No action	No action	Not in use
11	Leg 1 Remote	Remote	No action	When high: Follower leg 1 is controlled by master (automatically set).
12	Leg 2 Remote	Remote	No action	When high: Follower leg 2 is controlled by master (automatically set).

Index	Name						
	Text						
	Range	Default	Unit	Scale FbEq16	Volatile	Change running	Type

13	Leg 3 Remote	Remote	No action	When high: Follower leg 3 is controlled by master (automatically set).
14	reserved			
15	Master Warning/Fault	Warning/Fault active	Warning/Fault inactive	

0000h … FFFFh	-	-	1 = 1	y	n	Signal

06.10	**DDCS control word**
	Displays the unaltered control word received from a DDCS controller via a DDCS communication option module (FDCO-0x).

0000h … FFFFh	-	-	1 = 1	y	n	Signal

06.13	**Global Status Word**
	Global status word. 06.13 Global Status Word contains collective messages of the whole unit. The individual message is shown in 06.14 Leg 1 Status Word, 06.15 Leg 2 Status Word and 06.16 Leg 3 Status Word. Bit assignment:

Bit	Name	High	Low	Remarks
0	Any Warning	Warning active	Warning inactive	Collective warning message
1	Any Fault	Fault active	Fault inactive	Collective fault message
2	Enabled	Enabled	Not enabled	Collective enable message, high when one of the legs is enabled
3	Operating	In operation	Not in operation	Collective operating message, high when one of the legs is in operation
4 … 15	reserved			

0000h … FFFFh	-	-	1 = 1	y	n	Signal

06.14	**Leg 1 Status Word**
	Status word for leg 1. Bit assignment:

Bit	Name	High	Low
0	Leg 1 Warning	Warning active	Warning inactive
1	Leg 1 Fault	Fault active	Fault inactive
2	Leg 1 Sync	Synchronized to mains	Not synchronized to mains
3	Leg 1 Enabled	Enabled	Not enabled
4	Leg 1 Operating	In operation	Not in operation
5	Leg 1 Current Limit active	Current limit active	Current limit inactive
6	Leg 1 Voltage Limit active	Voltage limit active	Voltage limit inactive
7	Leg 1 Power Limit active	Power limit active	Power limit inactive
8	Leg 1 at Reference	Output is at reference	Output is not at reference (more than 5 % deviation)
9	Leg 1 Burst Operation	Burst operation active	Burst operation inactive
10	Leg 1 Remote	Remote	Local
11	Mains Contactor ON Cmd	Mains contactor on command	-
12	Fans ON Cmd	Fans on command	-

Index	Name						
	Text						
	Range	Default	Unit	Scale FbEq16	Volatile	Change running	Type
	13 Leg 1 Current flow: Current detected (see 36.12 Leg 1 Load Loss Current level); No current detected 14 Leg 1 2nd mode: 2nd control mode active, see 23.07 Leg 1 2nd mode switching control; 1st control mode active, see 23.07 Leg 1 2nd mode switching control 15 Leg 1 Local: Local; Remote						
	0000h … FFFFh	-	-	1 = 1	y	n	Signal
06.15	**Leg 2 Status Word**						
	Status word for leg 2. Bit assignment: See 06.14 Leg 1 Status Word.						
	0000h … FFFFh	-	-	1 = 1	y	n	Signal
06.16	**Leg 3 Status Word**						
	Status word for leg 3. Bit assignment: See 06.14 Leg 1 Status Word.						
	0000h … FFFFh	-	-	1 = 1	y	n	Signal
06.20	**User Status Word 1**						
	First user defined status word. This word shows the status of the binary sources selected by parameters 06.21 … 06.36. Bit assignment:						

Bit	Name	High	Low
0	User status bit 0		
1	User status bit 1		
2	User status bit 2		
3	User status bit 3		
4	User status bit 4		
5	User status bit 5		
6	User status bit 6		
7	User status bit 7		
8	User status bit 8		
9	User status bit 9		
10	User status bit 10		
11	User status bit 11		
12	User status bit 12		
13	User status bit 13		
14	User status bit 14		
15	User status bit 15		

	0000h … FFFFh	-	-	1 = 1	y	n	Signal
06.21	**User Status Word 1 bit 0 sel**						
	Binary source for bit 0. Selects a binary source whose status is shown as bit 0 of 6.20 User Status Word 1. **Other [bit]**; source selection. 0: **FALSE**; 1: **TRUE**;						
	0 … 1	FALSE	-	1 = 1	n	y	Parameter

Index	Name						
	Text						
	Range	**Default**	**Unit**	**Scale FbEq16**	**Volatile**	**Change running**	**Type**
06.22	**User Status Word 1 bit 1 sel**						
	Binary source for bit 1. Selects a binary source whose status is shown as bit 1 of 6.20 User Status Word 1. **Other [bit]**; source selection. 0: **FALSE**; 1: **TRUE**;						
	0 … 1	FALSE	-	1 = 1	n	y	Parameter
06.23	**User Status Word 1 bit 2 sel**						
	Binary source for bit 2. Selects a binary source whose status is shown as bit 2 of 6.20 User Status Word 1. **Other [bit]**; source selection. 0: **FALSE**; 1: **TRUE**;						
	0 … 1	FALSE	-	1 = 1	n	y	Parameter
06.24	**User Status Word 1 bit 3 sel**						
	Binary source for bit 3. Selects a binary source whose status is shown as bit 3 of 6.20 User Status Word 1. **Other [bit];** source selection. 0: **FALSE**; 1: **TRUE**;						
	0 … 1	FALSE	-	1 = 1	n	y	Parameter
06.25	**User Status Word 1 bit 4 sel**						
	Binary source for bit 4. Selects a binary source whose status is shown as bit 4 of 6.20 User Status Word 1. **Other [bit]**; source selection. 0: **FALSE**; 1: **TRUE**;						
	0 … 1	FALSE	-	1 = 1	n	y	Parameter
06.26	**User Status Word 1 bit 5 sel**						
	Binary source for bit 5. Selects a binary source whose status is shown as bit 5 of 6.20 User Status Word 1. **Other [bit]**; source selection. 0: **FALSE**; 1: **TRUE**;						
	0 … 1	FALSE	-	1 = 1	n	y	Parameter
06.27	**User Status Word 1 bit 6 sel**						
	Binary source for bit 6. Selects a binary source whose status is shown as bit 6 of 6.20 User Status Word 1. **Other [bit]**; source selection. 0: **FALSE**; 1: **TRUE**;						
	0 … 1	FALSE	-	1 = 1	n	y	Parameter
06.28	**User Status Word 1 bit 7 sel**						
	Binary source for bit 7. Selects a binary source whose status is shown as bit 7 of 6.20 User Status Word 1. **Other [bit]**; source selection. 0: **FALSE**; 1: **TRUE**;						
	0 … 1	FALSE	-	1 = 1	n	y	Parameter

Index	Name						
	Text						
	Range	**Default**	**Unit**	**Scale FbEq16**	**Volatile**	**Change running**	**Type**
06.29	**User Status Word 1 bit 8 sel**						
	Binary source for bit 8. Selects a binary source whose status is shown as bit 8 of 6.20 User Status Word 1. **Other [bit]**; source selection. 0: **FALSE**; 1: **TRUE**;						
	0 … 1	FALSE	-	1 = 1	n	y	Parameter
06.30	**User Status Word 1 bit 9 sel**						
	Binary source for bit 9. Selects a binary source whose status is shown as bit 9 of 6.20 User Status Word 1. **Other [bit]**; source selection. 0: **FALSE**; 1: **TRUE**;						
	0 … 1	FALSE	-	1 = 1	n	y	Parameter
06.31	**User Status Word 1 bit 10 sel**						
	Binary source for bit 10. Selects a binary source whose status is shown as bit 10 of 6.20 User Status Word 1. **Other [bit]**; source selection. 0: **FALSE**; 1: **TRUE**;						
	0 … 1	FALSE	-	1 = 1	n	y	Parameter
06.32	**User Status Word 1 bit 11 sel**						
	Binary source for bit 11. Selects a binary source whose status is shown as bit 11 of 6.20 User Status Word 1. **Other [bit]**; source selection. 0: **FALSE**; 1: **TRUE**;						
	0 … 1	FALSE	-	1 = 1	n	y	Parameter
06.33	**User Status Word 1 bit 12 sel**						
	Binary source for bit 12. Selects a binary source whose status is shown as bit 12 of 6.20 User Status Word 1. **Other [bit]**; source selection. 0: **FALSE**; 1: **TRUE**;						
	0 … 1	FALSE	-	1 = 1	n	y	Parameter
06.34	**User Status Word 1 bit 13 sel**						
	Binary source for bit 13. Selects a binary source whose status is shown as bit 13 of 6.20 User Status Word 1. **Other [bit]**; source selection. 0: **FALSE**; 1: **TRUE**;						
	0 … 1	FALSE	-	1 = 1	n	y	Parameter
06.35	**User Status Word 1 bit 14 sel**						
	Binary source for bit 14. Selects a binary source whose status is shown as bit 14 of 6.20 User Status Word 1. **Other [bit]**; source selection. 0: **FALSE**; 1: **TRUE**;						
	0 … 1	FALSE	-	1 = 1	n	y	Parameter

Index	Name						
	Text						
	Range	**Default**	**Unit**	**Scale FbEq16**	**Volatile**	**Change running**	**Type**
06.36	**User Status Word 1 bit 15 sel**						
	Binary source for bit 15. Selects a binary source whose status is shown as bit 15 of 6.20 User Status Word 1. **Other [bit]**; source selection. 0: **FALSE**; 1: **TRUE**;						
	0 … 1	FALSE	-	1 = 1	n	y	Parameter
06.40	**User Status Word 2**						
	Second user defined status word. This word shows the status of the binary sources selected by parameters 06.41 … 06.56. Bit assignment: See 06.20 User Status Word 1.						
	0000h … FFFFh	-	-	1 = 1	y	n	Signal
06.41	**User Status Word 2 bit 0 sel**						
	Binary source for bit 0. Selects a binary source whose status is shown as bit 0 of 6.40 User Status Word 2. **Other [bit]**; source selection. 0: **FALSE**; 1: **TRUE**;						
	0 … 1	FALSE	-	1 = 1	n	y	Parameter
06.42	**User Status Word 2 bit 1 sel**						
	Binary source for bit 1. Selects a binary source whose status is shown as bit 1 of 6.40 User Status Word 2. **Other [bit]**; source selection. 0: **FALSE**; 1: **TRUE**;						
	0 … 1	FALSE	-	1 = 1	n	y	Parameter
06.43	**User Status Word 2 bit 2 sel**						
	Binary source for bit 2. Selects a binary source whose status is shown as bit 2 of 6.40 User Status Word 2. **Other [bit]**; source selection. 0: **FALSE**; 1: **TRUE**;						
	0 … 1	FALSE	-	1 = 1	n	y	Parameter
06.44	**User Status Word 2 bit 3 sel**						
	Binary source for bit 3. Selects a binary source whose status is shown as bit 3 of 6.40 User Status Word 2. **Other [bit]**; source selection. 0: **FALSE**; 1: **TRUE**;						
	0 … 1	FALSE	-	1 = 1	n	y	Parameter
06.45	**User Status Word 2 bit 4 sel**						
	Binary source for bit 4. Selects a binary source whose status is shown as bit 4 of 6.40 User Status Word 2. **Other [bit]**; source selection. 0: **FALSE**; 1: **TRUE**;						
	0 … 1	FALSE	-	1 = 1	n	y	Parameter

Index	Name						
	Text						
	Range	Default	Unit	Scale FbEq16	Volatile	Change running	Type
06.46	**User Status Word 2 bit 5 sel**						
	Binary source for bit 5. Selects a binary source whose status is shown as bit 5 of 6.40 User Status Word 2. **Other [bit]**; source selection. 0: **FALSE**; 1: **TRUE**;						
	0 … 1	FALSE	-	1 = 1	n	y	Parameter
06.47	**User Status Word 2 bit 6 sel**						
	Binary source for bit 6. Selects a binary source whose status is shown as bit 6 of 6.40 User Status Word 2. **Other [bit]**; source selection. 0: **FALSE**; 1: **TRUE**;						
	0 … 1	FALSE	-	1 = 1	n	y	Parameter
06.48	**User Status Word 2 bit 7 sel**						
	Binary source for bit 7. Selects a binary source whose status is shown as bit 7 of 6.40 User Status Word 2. **Other [bit]**; source selection. 0: **FALSE**; 1: **TRUE**;						
	0 … 1	FALSE	-	1 = 1	n	y	Parameter
06.49	**User Status Word 2 bit 8 sel**						
	Binary source for bit 8. Selects a binary source whose status is shown as bit 8 of 6.40 User Status Word 2. **Other [bit]**; source selection. 0: **FALSE**; 1: **TRUE**;						
	0 … 1	FALSE	-	1 = 1	n	y	Parameter
06.50	**User Status Word 2 bit 9 sel**						
	Binary source for bit 9. Selects a binary source whose status is shown as bit 9 of 6.40 User Status Word 2. **Other [bit]**; source selection. 0: **FALSE**; 1: **TRUE**;						
	0 … 1	FALSE	-	1 = 1	n	y	Parameter
06.51	**User Status Word 2 bit 10 sel**						
	Binary source for bit 10. Selects a binary source whose status is shown as bit 10 of 6.40 User Status Word 2. **Other [bit]**; source selection. 0: **FALSE**; 1: **TRUE**;						
	0 … 1	FALSE	-	1 = 1	n	y	Parameter
06.52	**User Status Word 2 bit 11 sel**						
	Binary source for bit 11. Selects a binary source whose status is shown as bit 11 of 6.40 User Status Word 2. **Other [bit]**; source selection. 0: **FALSE**; 1: **TRUE**;						
	0 … 1	FALSE	-	1 = 1	n	y	Parameter
06.53	**User Status Word 2 bit 12 sel**						
	Binary source for bit 12.						

Index	Name						
	Text						
	Range	**Default**	**Unit**	**Scale FbEq16**	**Volatile**	**Change running**	**Type**
	Selects a binary source whose status is shown as bit 12 of 6.40 User Status Word 2. **Other [bit]**; source selection. 0: **FALSE**; 1: **TRUE**;						
	0 … 1	FALSE	-	1 = 1	n	y	Parameter
06.54	**User Status Word 2 bit 13 sel**						
	Binary source for bit 13. Selects a binary source whose status is shown as bit 13 of 6.40 User Status Word 2. **Other [bit]**; source selection. 0: **FALSE**; 1: **TRUE**;						
	0 … 1	FALSE	-	1 = 1	n	y	Parameter
06.55	**User Status Word 2 bit 14 sel**						
	Binary source for bit 14. Selects a binary source whose status is shown as bit 14 of 6.40 User Status Word 2. **Other [bit]**; source selection. 0: **FALSE**; 1: **TRUE**;						
	0 … 1	FALSE	-	1 = 1	n	y	Parameter
06.56	**User Status Word 2 bit 15 sel**						
	Binary source for bit 15. Selects a binary source whose status is shown as bit 15 of 6.40 User Status Word 2. **Other [bit]**; source selection. 0: **FALSE**; 1: **TRUE**;						
	0 … 1	FALSE	-	1 = 1	n	y	Parameter
06.60	**Global Fault Word 1**						
	First global fault word. Each bit represents one specific event. Bit assignment:						

Bit	Name	High	Low	Remarks
0	Type Code Mismatch	Active	Inactive	See faults 5525 Type code and 5221 Rating ID mismatch.
1	Option Error	Active	Inactive	See faults 5265 Incompatible option module and 5508 Ext I/O comm loss.
2	Communication Error	Active	Inactive	See faults 5223 FBA A communication and 5224 FBA B communication.
3	Power Part Overtemperature	Active	Inactive	See fault 3804 Power Part Overtemperature.
4	Inconsistent Data	Active	Inactive	See faults 5242 … 5245 Internal faults.
5	Enable Circuit Fault	Active	Inactive	reserved
6	Overtemperature Load	Active	Inactive	See faults 5201 Temperature 1 fault, 5202 Temperature 2 fault, fault 5203 Temperature 3 fault and fault 5204 Temperature 4 fault.
7	No controller fan acknowledge	Active	inactive	See fault 3808 Controller fan acknowledge.
8	reserved			
9	reserved			
10	reserved			

Index	Name						
	Text						
	Range	Default	Unit	Scale FbEq16	Volatile	Change running	Type

11	Mains Synchronization Fault	Active	Inactive	See fault 3811 Mains Synchronization lost.
12	Unicos Fault	Active	Inactive	See fault 5548 Internal firmware.
13	Control Builder application Fault	Active	Inactive	Problem with the Control Builder application program.
14 … 15	reserved			

0000h … FFFFh	-	-	1 = 1	y	n	Signal

06.61 Global Fault Word 2

Second global fault word.
Each bit represents one specific event.
Bit assignment:

Bit	Name	High	Low	Remarks
0 … 15	reserved			

0000h … FFFFh	-	-	1 = 1	y	n	Signal

06.62 Global Warning Word

Global warning word.
Each bit represents one specific event.
Bit assignment:

Bit	Name	High	Low	Remarks
0	Parameter Setting Mismatch	Active	Inactive	See warning 1132 Parameter setting mismatch.
1	reserved			
2	reserved			
3	Overtemperature Power Part	Active	Inactive	See warning 2804 Power Part Overtemperature.
4	reserved			
5	reserved			
6	Overtemperature Load	Active	Inactive	reserved
7	No controller fan acknowledge	Active	inactive	reserved
8	reserved			
9	reserved			
10	reserved			
11	Mains Synchronization Warning	Active	Inactive	reserved
12 …15	reserved			

0000h … FFFFh	-	-	1 = 1	y	n	Signal

06.63 External Event Word

External event word.
Each bit represents one specific event.
Bit assignment:

Bit	Name	High	Low	Remarks
0	External Event 1	Active	Inactive	See fault 5211 External fault 1 or warning 1201 External warning 1.
1	External Event 2	Active	Inactive	See fault 5212 External fault 2 or warning 1202 External warning 2.

Index	Name						
	Text						
	Range	Default	Unit	Scale FbEq16	Volatile	Change running	Type

2	External Event 3	Active	Inactive	See fault 5213 External fault 3 or warning 1203 External warning 3.
3	External Event 4	Active	Inactive	See fault 5214 External fault 4 or warning 1204 External warning 4.
4	External Event 5	Active	Inactive	See fault 5215 External fault 5 or warning 1205 External warning 5.
5 … 15	reserved			

Range	Default	Unit	Scale FbEq16	Volatile	Change running	Type
0000h … FFFFh	-	-	1 = 1	y	n	Signal

06.66 Leg 1 Fault Word

Fault word for leg 1.
Each bit represents one specific event.
Bit assignment:

Bit	Name	High	Low	Remarks
0	Overcurrent	Active	Inactive	See fault 3101 Leg 1 Overcurrent.
1	Mains Overvoltage	Active	Inactive	See fault 3102 Leg 1 Mains Overvoltage.
2	Thyristor short circuit	Active	Inactive	See fault 3103 Leg 1 Thyristor Short Circuit.
3	Thyristor open circuit	Active	Inactive	See fault 3104 Leg 1 Thyristor Open Circuit.
4	Mains Undervoltage	Active	Inactive	See fault 3105 Leg 1 Mains Undervoltage.
5	Unit thermal overload	Active	Inactive	See fault 3154 Leg 1 Unit Thermal Overload.
6 … 15	reserved			

Range	Default	Unit	Scale FbEq16	Volatile	Change running	Type
0000h … FFFFh	-	-	1 = 1	y	n	Signal

06.67 Leg 2 Fault Word

Fault word for leg 2.
Each bit represents one specific event.
Bit assignment:

Bit	Name	High	Low	Remarks
0	Overcurrent	Active	Inactive	See fault 3201 Leg 2 Overcurrent.
1	Mains Overvoltage	Active	Inactive	See fault 3202 Leg 2 Mains Overvoltage.
2	Thyristor short circuit	Active	Inactive	See fault 3203 Leg 2 Thyristor Short Circuit.
3	Thyristor open circuit	Active	Inactive	See fault 3204 Leg 2 Thyristor Open Circuit.
4	Mains Undervoltage	Active	Inactive	See fault 3205 Leg 2 Mains Undervoltage.
5	Unit thermal overload	Active	Inactive	See fault 3254 Leg 2 Unit Thermal Overload.
6 … 15	reserved			

Range	Default	Unit	Scale FbEq16	Volatile	Change running	Type
0000h … FFFFh	-	-	1 = 1	y	n	Signal

06.68 Leg 3 Fault Word

Fault word for leg 3.
Each bit represents one specific event.
Bit assignment:

Bit	Name	High	Low	Remarks
0	Overcurrent	Active	Inactive	See fault 3301 Leg 3 Overcurrent.
1	Mains Overvoltage	Active	Inactive	See fault 3302 Leg 3 Mains Overvoltage.
2	Thyristor short circuit	Active	Inactive	See fault 3303 Leg 3 Thyristor Short Circuit.
3	Thyristor open circuit	Active	Inactive	See fault 3304 Leg 3 Thyristor Open Circuit.

Index	Name						
	Text						
	Range	Default	Unit	Scale FbEq16	Volatile	Change running	Type

4	Mains Undervoltage	Active	Inactive	See fault 3305 Leg 3 Mains Undervoltage.
5	Unit thermal overload	Active	Inactive	See fault 3354 Leg 3 Unit Thermal Overload.
6 … 15	reserved			

0000h … FFFFh	-	-	1 = 1	y	n	Signal

06.71 Leg 1 Warning Word

Warning word for leg 1.
Each bit represents one specific event.
Bit assignment:

Bit	Name	High	Low	Remarks
0	Overcurrent	Active	Inactive	See warning 2101 Leg 1 Overcurrent.
1	Mains Overvoltage	Active	Inactive	See warning 2102 Leg 1 Mains Overvoltage.
2	Thyristor short circuit	Active	Inactive	See warning 2103 Leg 1 Thyristor Short Circuit.
3	Thyristor open circuit	Active	Inactive	See warning 2104 Leg 1 Thyristor Open Circuit.
4	Mains Undervoltage	Active	Inactive	See warning 2105 Leg 1 Mains Undervoltage.
5	Unit thermal overload	Active	Inactive	See warning 2154 Leg 1 Unit Thermal Overload.
6 … 15	reserved			

0000h … FFFFh	-	-	1 = 1	y	n	Signal

06.72 Leg 2 Warning Word

Warning word for leg 2.
Each bit represents one specific event:
Bit assignment:

Bit	Name	High	Low	Remarks
0	Overcurrent	Active	Inactive	See warning 2201 Leg 2 Overcurrent.
1	Mains Overvoltage	Active	Inactive	See warning 2202 Leg 2 Mains Overvoltage.
2	Thyristor short circuit	Active	Inactive	See warning 2203 Leg 2 Thyristor Short Circuit.
3	Thyristor open circuit	Active	Inactive	See warning 2204 Leg 2 Thyristor Open Circuit.
4	Mains Undervoltage	Active	Inactive	See warning 2205 Leg 2 Mains Undervoltage.
5	Unit thermal overload	Active	Inactive	See warning 2254 Leg 2 Unit Thermal Overload.
6 … 15	reserved			

0000h … FFFFh	-	-	1 = 1	y	n	Signal

06.73 Leg 3 Warning Word

Warning word for leg 3.
Each bit represents one specific event.
Bit assignment:

Bit	Name	High	Low	Remarks
0	Overcurrent	Active	Inactive	See warning 2301 Leg 3 Overcurrent.
1	Mains Overvoltage	Active	Inactive	See warning 2302 Leg 3 Mains Overvoltage.
2	Thyristor short circuit	Active	Inactive	See warning 2303 Leg 3 Thyristor Short Circuit.
3	Thyristor open circuit	Active	Inactive	See warning 2304 Leg 3 Thyristor Open Circuit.

Index	Name						
	Text						
	Range	Default	Unit	Scale FbEq16	Volatile	Change running	Type

4	Mains Undervoltage	Active	Inactive	See warning 2305 Leg 3 Mains Undervoltage.
5	Unit thermal overload	Active	Inactive	See warning 2354 Leg 3 Unit Thermal Overload.
6 … 15	reserved			

0000h … FFFFh	-	-	1 = 1	y	n	Signal

06.76 Leg 1 Load Fault Word

Fault word for the load of leg 1.
Each bit represents one specific event.
Bit assignment:

Bit	Name	High	Low	Remarks
0	Load Loss	Active	Inactive	See fault 3151 Leg 1 Load Loss.
1	Partial Load loss	Active	Inactive	See fault 3152 Leg 1 Partial Load Loss.
2	Partial Load short circuit	Active	Inactive	See fault 3153 Leg 1 Partial Load Short Circuit.
3	Load overload	Active	Inactive	See fault 3155 Leg 1 Load Overload.
4	Load aging	Active	Inactive	See fault 3157 Leg 1 Load Aging.
5	Load current imbalance	Active	Inactive	See fault 3158 Leg 1 Load Current Imbalance.
6 … 15	reserved			

0000h … FFFFh	-	-	1 = 1	y	n	Signal

06.77 Leg 2 Load Fault Word

Fault word for the load of leg 2.
Each bit represents one specific event.
Bit assignment:

Bit	Name	High	Low	Remarks
0	Load Loss	Active	Inactive	See fault 3251 Leg 2 Load Loss.
1	Partial Load loss	Active	Inactive	See fault 3252 Leg 2 Partial Load Loss.
2	Partial Load short circuit	Active	Inactive	See fault 3253 Leg 2 Partial Load Short Circuit.
3	Load overload	Active	Inactive	See fault 3255 Leg 2 Load Overload.
4	Load aging	Active	Inactive	See fault 3257 Leg 2 Load Aging.
5	Load current imbalance	Active	Inactive	See fault 3258 Leg 2 Load Current Imbalance.
6 … 15	reserved			

0000h … FFFFh	-	-	1 = 1	y	n	Signal

Index	Name						
	Text						
	Range	Default	Unit	Scale FbEq16	Volatile	Change running	Type
06.78	Leg 3 Load Fault Word						
	Fault word for the load of leg 3. Each bit represents one specific event. Bit assignment:						
	0000h … FFFFh	-	-	1 = 1	y	n	Signal
06.81	Leg 1 Load Warning Word						
	Warning word for the load of leg 1. Each bit represents one specific event. Bit assignment:						
	0000h … FFFFh	-	-	1 = 1	y	n	Signal
06.82	Leg 2 Load Warning Word						
	Warning word for the load of leg 2. Each bit represents one specific event. Bit assignment:						

Bit	Name	High	Low	Remarks
0	Load Loss	Active	Inactive	See fault 3351 Leg 3 Load Loss.
1	Partial Load loss	Active	Inactive	See fault 3352 Leg 3 Partial Load Loss.
2	Partial Load short circuit	Active	Inactive	See fault 3353 Leg 3 Partial Load Short Circuit.
3	Load overload	Active	Inactive	See fault 3355 Leg 3 Load Overload.
4	Load aging	Active	Inactive	See fault 3357 Leg 3 Load Aging.
5	Load current imbalance	Active	Inactive	See fault 3358 Leg 3 Load Current Imbalance.
6 … 15	reserved			

Bit	Name	High	Low	Remarks
0	Load Loss	Active	Inactive	See warning 2151 Leg 1 Load Loss.
1	Partial Load loss	Active	Inactive	See warning 2152 Leg 1 Partial Load Loss.
2	Partial Load short circuit	Active	Inactive	See warning 2153 Leg 1 Partial Load Short Circuit.
3	Load overload	Active	Inactive	See warning 2155 Leg 1 Load Overload.
4	Load aging	Active	Inactive	See warning 2157 Leg 1 Load Aging.
5	Load current imbalance	Active	Inactive	See warning 2158 Leg 1 Load Current Imbalance.
6 … 15	reserved			

Bit	Name	High	Low	Remarks
0	Load Loss	Active	Inactive	See warning 2251 Leg 2 Load Loss.
1	Partial Load loss	Active	Inactive	See warning 2252 Leg 2 Partial Load Loss.
2	Partial Load short circuit	Active	Inactive	See warning 2253 Leg 2 Partial Load Short Circuit.
3	Load overload	Active	Inactive	See warning 2255 Leg 2 Load Overload.
4	Load aging	Active	Inactive	See warning 2257 Leg 2 Load Aging.
5	Load current imbalance	Active	Inactive	See warning 2258 Leg 2 Load Current Imbalance.
6 … 15	reserved			

Index	Name						
	Text						
	Range	Default	Unit	Scale FbEq16	Volatile	Change running	Type
	0000h … FFFFh	-	-	1 = 1	y	n	Signal
06.83	Leg 3 Load Warning Word						

Warning word for the load of leg 3.
Each bit represents one specific event.
Bit assignment:

Bit	Name	High	Low	Remarks
0	Load Loss	Active	Inactive	See warning 2351 Leg 3 Load Loss.
1	Partial Load loss	Active	Inactive	See warning 2352 Leg 3 Partial Load Loss.
2	Partial Load short circuit	Active	Inactive	See warning 2353 Leg 3 Partial Load Short Circuit.
3	Load overload	Active	Inactive	See warning 2355 Leg 3 Load Overload.
4	Load aging	Active	Inactive	See warning 2357 Leg 3 Load Aging.
5	Load current imbalance	Active	Inactive	See warning 2358 Leg 3 Load Current Imbalance.
6 … 15	reserved			

0000h … FFFFh	-	-	1 = 1	y	n	Signal

06.84	Temperature Measurement Status Word

Status word for the temperature measurement.
Each bit represents one specific event.
Bit assignment:

Bit	Name	High	Low	Remarks
0	Temp 1 Channel	Active	Inactive	See group 35 Temperature Measurement.
1	Temp 1 Warning	Active	Inactive	
2	Temp 1 Fault	Active	Inactive	
3	Temp 2 Channel	Active	Inactive	
4	Temp 2 Warning	Active	Inactive	
5	Temp 2 Fault	Active	Inactive	
6	Temp 3 Channel	Active	Inactive	
7	Temp 3 Warning	Active	Inactive	
8	Temp 3 Fault	Active	Inactive	
9	Temp 4 Channel	Active	Inactive	
10	Temp 4 Warning	Active	Inactive	
11	Temp 4 Fault	Active	Inactive	
12 … 15	reserved			

0000h … FFFFh	-	-	1 = 1	y	n	Signal

06.90	Multitap Status Word 1

First status word for multitap.
Bit assignment:

Bit	Name	High	Low
0 … 15	reserved		

0000h … FFFFh	-	-	1 = 1	y	n	Signal

Index	Name						
	Text						
	Range	Default	Unit	Scale FbEq16	Volatile	Change running	Type
06.91	**Multitap Status Word 2**						
	Second status word for multitap. Bit assignment:						
	0000h … FFFFh	-	-	1 = 1	y	n	Signal
06.93	**Follower Status Word**						
	Follower status word (followers only). The follower status word can be transferred from the followers to the master, see groups 61 and 62. Bit assignment:						
	0000h … FFFFh	-	-	1 = 1	y	n	Signal
06.94	**Follower Control Word received**						
	Follower control word received from master (see parameters 61.01 … 61.03, followers only). 06.09 Follower Control Word is sent by the master, using D2D link, to 06.94 Follower Control Word received in all followers. Bit assignment:						

Bit	Name	High	Low
0 … 15	reserved		

Bit	Name	High	Low
0	Ready for On	Unit is ready to be switched on	Unit is not ready to be switched on
1	Enabled	Enabled	Not enabled
2	Operating	In operation	Not in operation
3	Any Fault	Fault active	Fault inactive
4	reserved		
5	reserved		
6	reserved		
7	Any Warning	Warning active	Warning inactive
8 … 15	reserved		

Bit	Name	High	Low	Remarks
0	Leg 1 Enable	Enable	Disable	Mains contactor ON command. Fans ON command.
1	Leg 1 Run	Run and no active fault in master	Stop or active fault in master	
2	Leg 2 Enable	Enable	Disable	Mains contactor ON command. Fans ON command.
3	Leg 2 Run	Run and no active fault in master	Stop or active fault in master	
4	Leg 3 Enable	Enable	Disable	Mains contactor ON command. Fans ON command.
5	Leg 3 Run	Run and no active fault in master	Stop or active fault in master	
6	reserved			
7	Reset	Reset	No action	

Index	Name						
	Text						
	Range	Default	Unit	Scale FbEq16	Volatile	Change running	Type
	8 reserved						
	9 reserved						
	10 Remote CMD	No action		No action		Not in use	
	11 Leg 1 Remote	Remote		No action		When high: Follower leg 1 is controlled by master (automatically set).	
	12 Leg 2 Remote	Remote		No action		When high: Follower leg 2 is controlled by master (automatically set).	
	13 Leg 3 Remote	Remote		No action		When high: Follower leg 3 is controlled by master (automatically set).	
	14 reserved						
	15 Master Warning/Fault	Warning/Fault active		Warning/Fault inactive			
	0000h … FFFFh	-	-	1 = 1	y	n	Signal

7 System info

The unit’s hardware and firmware information.

Index	Name						
	Text						
	Range	Default	Unit	Scale FbEq16	Volatile	Change running	Type
07.02	**Power unit set**						
	Type of power unit. The value is read from 95.14 Set: Power unit (saved on the SDCS-CON-H01). 0: **DCS converter**; the unit is a DCS880. 20: **DCT controller**; the unit is a DCT880. 40: **TSU supply unit**; the unit is a TSU880. 100: **Unsupported power unit type**; mismatch between 95.14 Set: Power unit read from SDCS-CON-H01 and 95.14 Set: Power unit read from the plugged-in memory unit. This event generates fault 5525 Type code and shows 95.14 Set: Power unit. Either adapt the SDCS-CON-H01 using 95.14 Set: Power unit and 95.25 Set: Type code or use a memory unit with an appropriate firmware.						
	0 … 100	-	-	1 = 1	y	n	Signal
07.03	**Unit rating ID set**						
	Type of the unit. The value is read from 95.16 Set: Unit type code (saved on the SDCS-CON-H01). **Example**: W03-0020-05.						
	0 ... 520	-	-	1 = 1	y	n	Signal
07.04	**Firmware name**						
	Firmware identification. **Example**: DCTF1 = DCT880 Firmware.						
		-	-	1 = 1	y	n	Signal
07.05	**Firmware version**						
	Version number of the firmware. **Example**: 1.05.0.0 = Firmware version 1.05.						
	0.000.0.0 … 255.255.255.255	-	-	1 = 1	y	n	Signal

Index	Name						
	Text						
	Range	**Default**	**Unit**	**Scale FbEq16**	**Volatile**	**Change running**	**Type**
07.06	**Application name**						
	Control Builder application program name. Displays the first five ASCII signs of the name given to the application program. The full name is visible under System info on the control panel or in the PC tool. _N/A_: **No name**;						
		-	-	1 = 1	y	n	Signal
07.07	**Application version**						
	Control Builder application version number. Displays the version number given to the application program. Also visible under System info on the control panel or in the PC tool. **Example**: 1.04.0.0 = Application program version 4.						
	0.000.0.0 … 255.255.255.255	-	-	1 = 1	y	n	Signal
07.08	**Application system library version**						
	Version number of the application system library. **Example**: 1.01.0.0 = Application system library version 1.01.						
	0.000.0.0 … 255.255.255.255	-	-	1 = 1	y	n	Signal
07.09	**Application license information**						
	Application license information. Information about the application license. 0: **No license**; the memory unit contains no license. Application programming not possible. 1: **No application**; the memory unit contains a license. No application loaded. 3: **Application: see 07.06 Application name**; the memory unit contains a license. An application is loaded. The name can be found in 07.23 Application name.						
	0 … 3	-	-	1 = 1	y	n	Signal
07.11	**CPU usage**						
	Microprocessor load in percent.						
	0 … 100	-	%	1 = 1 %	y	n	Signal
07.13	**Application environment status 1**						
	Application program task status. Shows, which tasks of the application program are running. See Drive (IEC 61131-3) application programming manual 3AUA0000127808. Bit assignment:						

Bit	Name	Value	Remarks
0	Pre-task	1	Pre-task running.
1	Application task 1	1	Task 1 running.
2	Application task 2	1	Task 2 running.
3	Application task 3	1	Task 3 running.
4	reserved		
5	reserved		
6	reserved		
7	reserved		
8	reserved		
9	reserved		
10	reserved		
11	reserved		
12	reserved		
13	reserved		
14	reserved		
15	Task monitoring	1	Task monitoring enabled.

Index	Name						
	Text						
	Range	Default	Unit	Scale FbEq16	Volatile	Change running	Type
	0000h … FFFFh	0000h	-	1 = 1	y	n	Signal
07.14	**Application environment status 2**						

Application program opening status.
Shows the status of the openings in the application program. See Drive (IEC 61131-3) application programming manual 3AUA0000127808.
Bit assignment:

Bit	Name	Value	Remarks
0	Opening 1	1	Status of opening 1 in the application program.
1	Opening 2	1	Status of opening 2 in the application program.
2	Opening 3	1	Status of opening 3 in the application program.
3	Opening 4	1	Status of opening 4 in the application program.
4	Opening 5	1	Status of opening 5 in the application program.
5	Opening 6	1	Status of opening 6 in the application program.
6	Opening 7	1	Status of opening 7 in the application program.
7	Opening 8	1	Status of opening 8 in the application program.
8	Opening 9	1	Status of opening 9 in the application program.
9	Opening 10	1	Status of opening 10 in the application program.
10	Opening 11	1	Status of opening 11 in the application program.
11	Opening 12	1	Status of opening 12 in the application program.
12	Opening 13	1	Status of opening 13 in the application program.
13	Opening 14	1	Status of opening 14 in the application program.
14	Opening 15	1	Status of opening 15 in the application program.
15	Opening 16	1	Status of opening 16 in the application program.

0000h … FFFFh	0000h	-	1 = 1	y	n	Signal

07.15 Unit type set

Unit type.
0: **None**; when 95.16 Set: Unit type code = W00-000-00.
1: **T1**; size T1.
2: **T2**; size T2.
3: **T3**; size T3.
4: **T4**; size T4.
5: **T5**; size T5.
6: **T6**; size T6.
7: **T7**; size T7 (reserved).
8: **T8**; size T8.
9: **Manual set**; set by user. 95.18 Set: Unit output current scaling and/or 95.19 Set: Unit input voltage scaling have been changed for e.g., modernization.

0 … 9	-	-	1 = 1	y	n	Signal

07.16 Unit legs set

Number of legs.
Number of legs in the unit.
1: **1**; single-leg circuit.
2: **2**; two-leg circuit.
3: **3**; three-leg circuit.

0 … 3	-	-	1 = 1	y	n	Signal

Index	Name						
	Text						
	Range	**Default**	**Unit**	**Scale FbEq16**	**Volatile**	**Change running**	**Type**
07.17	**Unit output current scaling set**						
	Recognized output current scaling. Displays the output current measurement circuit. Adjustment of the output current measuring channels (SDCS-PIN-H11 or SDCS-PIN-H51). Read from 95.16 Set: Unit type code or set with 95.18 Set: Unit output current scaling: Read from 95.16 Set: Unit type code, if 95.18 Set: Unit output current scaling = 0. Read from 95.18 Set: Unit output current scaling, if 95.18 Set: Unit output current scaling ≠ 0.						
	0 … 30000	-	A	1 = 1 A	y	n	Signal
07.18	**Unit output overcurrent level**						
	Output overcurrent level. Displays the output current tripping level. This signal is set during initialization of the unit. New values are shown after the next power-up. Unit output overcurrent level: 2.3 • 95.16 Set: Unit type code, if 95.18 Set: Unit output current scaling = 0. 2.3 • 95.18 Set: Unit output current scaling, if 95.18 Set: Unit output current scaling ≠ 0.						
	0 … 30000	-	A	1 = 1 A	y	n	Signal
07.19	**Unit input voltage scaling set**						
	Recognized unit input voltage. Displays the input voltage measurement circuit. Adjustment of input voltage measuring channels (SDCS-PIN-H11 or SDCS-PIN-H51). Read from 95.16 Set: Unit type code or set with 95.19 Set: Unit input voltage scaling: Read from 95.16 Set: Unit type code, if 95.19 Set: Unit input voltage scaling = 0. Read from 95.19 Set: Unit input voltage scaling, if 95.19 Set: Unit input voltage scaling ≠ 0.						
	0.0 … 3250.0	-	V	10 = 1 V	y	n	Signal
07.20	**Unit max power part temp set**						
	Recognized maximum power part temperature. Displays the maximum power part bridge temperature. Read from 95.16 Set: Unit type code or set with 95.20 Set: Unit max power part temp: Read from 95.16 Set: Unit type code, if 95.20 Set: Unit max power part temp = 0. Read from 95.20 Set: Unit max power part temp, if 95.20 Set: Unit max power part temp ≠ 0. The event generates fault 3804 Power Part Overtemperature when 07.20 Unit max power part temp set is reached. The event generates warning 2804 Power Part Overtemperature, when the measured power part temperature is approximately 5° below 07.20 Unit max power part temp set.						
	0 … 150	-	°C	1 = 1°C	y	n	Signal
07.21	**Unit Extension Module Status Word**						
	Status word for extension modules. Bit assignment:						

Bit	Name	High	Low
0 … 15	Bit 0 … 15		

	0000h … FFFFh	-	-	1 = 1	y	n	Signal
07.30	**Adaptive program status**						
	Adaptive program status. Displays the status of the adaptive program. Bit assignment:						

Bit	Name	Value	Remarks
0	Initialized	1	Adaptive program initialized.
1	Editing	1	Adaptive program is being edited.
2	Edit done	1	Editing of adaptive program finished.

Index	Name							
	Text							
	Range		Default	Unit	Scale FbEq16	Volatile	Change running	Type
	3	Running	1	Adaptive program running.				
	4	reserved						
	5	reserved						
	6	reserved						
	7	reserved						
	8	reserved						
	9	reserved						
	10	reserved						
	11	reserved						
	12	reserved						
	13	reserved						
	14	State changing	1	State change in progress in adaptive programming engine.				
	15	Faulted	1	Error in adaptive program.				
	0000h … FFFFh		-	-	1 = 1	y	n	Signal
07.40	**IEC application CPU usage peak**							
	Peak microprocessor load caused by the application program. Displays the peak load of the microprocessor caused by the application program. 07.40 IEC application CPU usage peak can be used to check the effect of a given application program on the CPU load. The value is in percent of an internal microprocessor quota. Can be reset from the control panel by keeping Reset depressed for over 3 seconds.							
	0 … 100		-	%	1 = 1 %	y	n	Signal
07.41	**IEC application CPU load average**							
	Average microprocessor load caused by the application program. Displays the average load of the microprocessor caused by the application program. The value is in percent of an internal microprocessor quota.							
	0 … 100		-	%	1 = 1 %	y	n	Signal
07.51	**Slot 1 option module**							
	Slot 1 option module. Displays the option module plugged into slot 1. 0: **No option**; no option module plugged into slot 1. 1: **No communication**; no communication to option module plugged into slot 1. 2: **Unknown**; option module plugged into slot 1 is unknown, wrong type or not valid. 8: **FPBA-01**; 10: **FCAN-01**; 11: **FDNA-01**; 13: **FENA-11**; 19: **FB COMMON**; 22: **FSCA-01**; 25: **FECA-01**; 26: **FENA-21**; 29: **FCNA-01**; 31: **FEPL-02**; 34: **FPCA-01**; 35: **FPNO-21**; 36: **FEIP-21**; 37:**FMBT-21**; 1015: **FIO-01**;							

Index	Name						
	Text						
	Range	**Default**	**Unit**	**Scale FbEq16**	**Volatile**	**Change running**	**Type**
	1020: **FIO-11**; 1024: **FAIO-01**; 1025: **FDIO-01**; 2949: **FDCO-01/02**;						
	0 … 65535	-	-	1 = 1	y	n	Signal
07.52	**Slot 2 option module**						
	Slot 2 option module. Displays the option module plugged into slot 2. For values, see 07.51 Slot 1 option module.						
	0 … 65535	-	-	1 = 1	y	n	Signal
07.53	**Slot 3 option module**						
	Slot 3 option module. Displays the option module plugged into slot 3. For values, see 07.51 Slot 1 option module.						
	0 … 65535	-	-	1 = 1	y	n	Signal
07.80	**Control unit logic version**						
	Version number of the control unit logic in the FPGA on the SDCS-CON-H01. **Example**: 10.10.0.0 = Firmware version 10.10.						
	0.000.0.0 … 255.255.255.255	-	-	1 = 1	y	n	Signal
07.81	**Ch1 power unit logic version**						
	Version number of the power unit logic in the FPGA on the SDCS-OPL-H01 connected to channel1 of the SDCS-DSL-H1x. **Example**: 10.10.0.0 = Firmware version 10.10.						
	0.000.0.0 … 255.255.255.255	-	-	1 = 1	y	n	Signal
07.86	**FPGA logic version name**						
	Used FPGA type. 0: **VIFO**; SDCS-CON-H01. 1: **VLFO**; SDCS-CON-H01L.						
	0 … 1	-	0 … 1	1 = 1	0 … 1	n	0 … 1
07.91	**Control board type**						
	Used Control board type. 0: **CON-H01**; SDCS-CON-H01. 2: **CON-H01L**; SDCS-CON-H01L.						
	0 … 2	-	-	1 = 1	y	n	Signal

10 Standard DI, RO

Configuration of digital inputs and relay outputs.

Index	Name						
	Text						
	Range	**Default**	**Unit**	**Scale FbEq16**	**Volatile**	**Change running**	**Type**
10.01	**DI status**						
	Status of digital inputs. Displays the electrical status of DI1 … DI6 and DIL. The activation/deactivation delays of the inputs (if any are specified) are ignored. A filtering time is defined by 10.51 DI filter time. Bits 0 … 5 reflect the status of DI1 … DI6. Bit 15 reflects the status of the DIL input. **Example**: 1000000000010011b = DIL, DI5, DI2 and DI1 are on, DI3, DI4 and DI6 are off. Bit assignment:						

Index	Name						
	Text						
	Range	Default	Unit	Scale FbEq16	Volatile	Change running	Type
	0000h … FFFFh	-	-	1 = 1	y	n	Signal

Bit	Name	Value	Remarks
0	DI1	1	On.
1	DI2	1	On.
2	DI3	1	On.
3	DI4	1	On.
4	DI5	1	On.
5	DI6	1	On.
6	reserved		
7	reserved		
8	reserved		
9	reserved		
10	reserved		
11	reserved		
12	reserved		
13	reserved		
14	reserved		
15	DIL	1	On.

10.02	DI delayed status						
	0000h … FFFFh	-	-	1 = 1	y	n	Signal

Delayed status of digital inputs.
Displays the delayed status of DI1 … DI6 and DIL. This word is updated only after activation/deactivation delays (if any are specified).
Bits 0 … 5 reflect the delayed status of DI1 … DI6. Bit 15 reflects the delayed status of the DIL input.
Example: 1000000000010011b = DIIL, DI5, DI2 and DI1 are on, DI3, DI4 and DI6 are off.
Bit assignment:

Bit	Name	Value	Remarks
0	DI1	1	On.
1	DI2	1	On.
2	DI3	1	On.
3	DI4	1	On.
4	DI5	1	On.
5	DI6	1	On.
6	reserved		
7	reserved		
8	reserved		
9	reserved		
10	reserved		
11	reserved		
12	reserved		
13	reserved		
14	reserved		
15	DIL	1	On.

Index	Name						
	Text						
	Range	Default	Unit	Scale FbEq16	Volatile	Change running	Type
10.03	**DI force selection**						

Override selection for digital inputs.
The electrical status of DI1 … DI6 and DIL can be overridden for e.g., testing purposes. A bit in 10.04 DI force data is provided for each digital input and its value is applied whenever the corresponding bit in 10.03 DI force selection is 1.
Bit assignment:

Bit	Name	Value	Remarks
0	DI1	1	Force DI1 to value of bit 0 of 10.04 DI force data.
1	DI2	1	Force DI2 to value of bit 1 of 10.04 DI force data.
2	DI3	1	Force DI3 to value of bit 2 of 10.04 DI force data.
3	DI4	1	Force DI4 to value of bit 3 of 10.04 DI force data.
4	DI5	1	Force DI5 to value of bit 4 of 10.04 DI force data.
5	DI6	1	Force DI6 to value of bit 5 of 10.04 DI force data.
6	reserved		
7	reserved		
8	reserved		
9	reserved		
10	reserved		
11	reserved		
12	reserved		
13	reserved		
14	reserved		
15	DIL	1	Force DIL to value of bit 15 of 10.04 DI force data.

0000h … FFFFh	0000h	-	1 = 1	y	y	Parameter

10.04	**DI force data**

Forced values of digital inputs.
Allows the data value of a forced DI1 … DI6 and DIL to be changed from 0 to 1. It is only possible to force an input that has been selected in 10.03 DI force selection.
Bits 0 … 5 are the forced values for DI1 … DI6. Bit 15 is the forced value for the DIL input.
Bit assignment:

Bit	Name	Value	Remarks
0	DI1	1	Force DI1 to on.
1	DI2	1	Force DI2 to on.
2	DI3	1	Force DI3 to on.
3	DI4	1	Force DI4 to on.
4	DI5	1	Force DI5 to on.
5	DI6	1	Force DI6 to on.
6	reserved		
7	reserved		
8	reserved		
9	reserved		
10	reserved		
11	reserved		
12	reserved		
13	reserved		
14	reserved		

Index	Name						
	Text						
	Range	Default	Unit	Scale FbEq16	Volatile	Change running	Type
	15 DIL 1 Force DIL to on.						
	0000h … FFFFh	0000h	-	1 = 1	y	y	Parameter
10.05	**DI1 ON delay**						
	Activation delay for digital input DI1. Defines the activation delay for DI1. 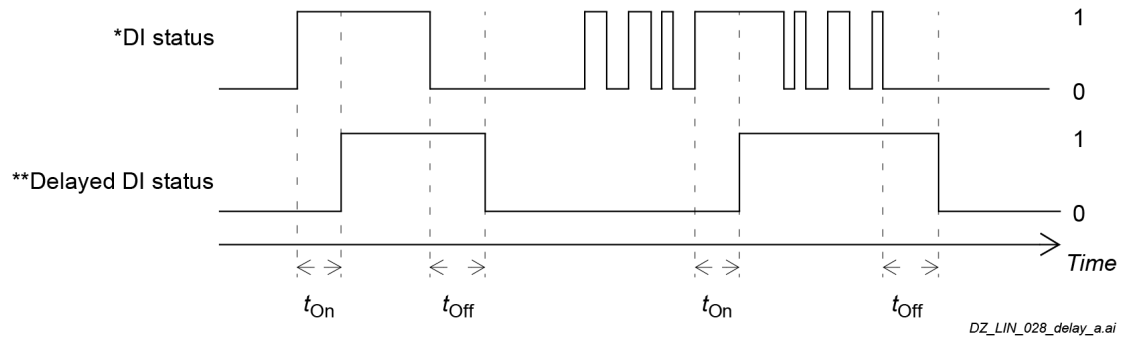 t_{On} = 10.05 DI1 ON delay t_{Off} = 10.06 DI1 OFF delay *Electrical status of digital input. Indicated by 10.01 DI status. **Indicated by 10.02 DI delayed status.						
	0.0 … 3000.0	0.0	s	10 = 1 s	n	y	Parameter
10.06	**DI1 OFF delay**						
	Deactivation delay for digital input DI1. Defines the deactivation delay for DI1. See 10.05 DI1 ON delay.						
	0.0 … 3000.0	0.0	s	10 = 1 s	n	y	Parameter
10.07	**DI2 ON delay**						
	Activation delay for digital input DI2. Defines the activation delay for DI2. See 10.05 DI1 ON delay.						
	0.0 … 3000.0	0.0	s	10 = 1 s	n	y	Parameter
10.08	**DI2 OFF delay**						
	Deactivation delay for digital input DI2. Defines the deactivation delay for DI2. See 10.05 DI1 ON delay.						
	0.0 … 3000.0	0.0	s	10 = 1 s	n	y	Parameter
10.09	**DI3 ON delay**						
	Activation delay for digital input DI3. Defines the activation delay for DI3. See 10.05 DI1 ON delay.						
	0.0 … 3000.0	0.0	s	10 = 1 s	n	y	Parameter
10.10	**DI3 OFF delay**						
	Deactivation delay for digital input DI3. Defines the deactivation delay for DI3. See 10.05 DI1 ON delay.						
	0.0 … 3000.0	0.0	s	10 = 1 s	n	y	Parameter
10.11	**DI4 ON delay**						
	Activation delay for digital input DI4. Defines the activation delay for DI4.						

Index	Name						
	Text						
	Range	**Default**	**Unit**	**Scale FbEq16**	**Volatile**	**Change running**	**Type**
	See 10.05 DI1 ON delay.						
	0.0 … 3000.0	0.0	s	10 = 1 s	n	y	Parameter
10.12	**DI4 OFF delay**						
	Deactivation delay for digital input DI4. Defines the deactivation delay for DI4. See 10.05 DI1 ON delay.						
	0.0 … 3000.0	0.0	s	10 = 1 s	n	y	Parameter
10.13	**DI5 ON delay**						
	Activation delay for digital input DI5. Defines the activation delay for DI5. See 10.05 DI1 ON delay.						
	0.0 … 3000.0	0.0	s	10 = 1 s	n	y	Parameter
10.14	**DI5 OFF delay**						
	Deactivation delay for digital input DI5. Defines the deactivation delay for DI5. See 10.05 DI1 ON delay.						
	0.0 … 3000.0	0.0	s	10 = 1 s	n	y	Parameter
10.15	**DI6 ON delay**						
	Activation delay for digital input DI6. Defines the activation delay for DI6. See 10.05 DI1 ON delay.						
	0.0 … 3000.0	0.0	s	10 = 1 s	n	y	Parameter
10.16	**DI6 OFF delay**						
	Deactivation delay for digital input DI6. Defines the deactivation delay for DI6. See 10.05 DI1 ON delay.						
	0.0 … 3000.0	0.0	s	10 = 1 s	n	y	Parameter
10.21	**RO status**						
	Status of relay outputs. Status of RO1 … RO3 and the output for the mains contactor (XSMC:1/2). **Example**: 0000000000000001b = RO1 is energized, RO2 … RO3 are de-energized and XSMC:1/2 is off. Bit assignment:						

Bit	Name	Value	Remarks
0	RO1	1	Energized.
1	RO2	1	Energized.
2	RO3	1	Energized.
3 … 15	reserved		
15	XSMC:1/2	1	On.

	0000h … FFFFh	-	-	1 = 1	y	n	Signal
10.24	**RO1 source**						
	Source for relay output RO1. Selects a signal/parameter bit to be connected to RO1. **Other [bit]**; source selection. 0: **Not energized**; output is not energized. 1: **Energized**; output is energized. **40: RO/DIO control word bit0**; bit 0 of 10.99 RO/DIO control word. **41: RO/DIO control word bit1**; bit 1 of 10.99 RO/DIO control word.						

Index	Name						
	Text						
	Range	**Default**	**Unit**	**Scale FbEq16**	**Volatile**	**Change running**	**Type**
	42: RO/DIO control word bit2; bit 2 of 10.99 RO/DIO control word. **43: RO/DIO control word bit8**; bit 8 of 10.99 RO/DIO control word. **44: RO/DIO control word bit9**; bit 9 of 10.99 RO/DIO control word.						
	0 … 44	Not energized	-	1 = 1	n	y	Parameter
10.25	**RO1 ON delay**						
	Activation delay for relay output RO1. Defines the activation delay for RO1. 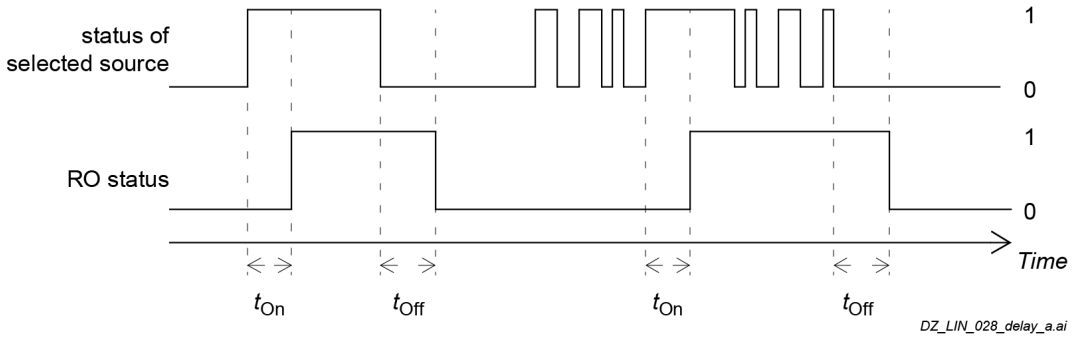 t_{On} = 10.25 RO1 ON delay t_{Off} = 10.26 RO1 OFF delay						
	0.0 … 3000.0	0.0	s	10 = 1 s	n	y	Parameter
10.26	**RO1 OFF delay**						
	Deactivation delay for relay output RO1. Defines the deactivation delay for RO1. See 10.25 RO1 ON delay.						
	0.0 … 3000.0	0.0	s	10 = 1 s	n	y	Parameter
10.27	**RO2 source**						
	Source for relay output RO2. Selects a signal/parameter bit to be connected to RO2. See 10.24 RO1 source.						
	0 … 44	Not energized	-	1 = 1	n	y	Parameter
10.28	**RO2 ON delay**						
	Activation delay for relay output RO2. Defines the activation delay for RO2. See 10.25 RO1 ON delay.						
	0.0 … 3000.0	0.0	s	10 = 1 s	n	y	Parameter
10.29	**RO2 OFF delay**						
	Deactivation delay for relay output RO2. Defines the deactivation delay for RO2. See 10.25 RO1 ON delay.						
	0.0 … 3000.0	0.0	s	10 = 1 s	n	y	Parameter
10.30	**RO3 source**						
	Source for relay output RO3. Selects a signal/parameter bit to be connected to RO3. See 10.24 RO1 source.						
	0 … 44	Not energized	-	1 = 1	n	y	Parameter
10.31	**RO3 ON delay**						
	Activation delay for relay output RO3. Defines the activation delay for RO3. See 10.25 RO1 ON delay.						

Index	Name						
	Text						
	Range	**Default**	**Unit**	**Scale FbEq16**	**Volatile**	**Change running**	**Type**
	0.0 … 3000.0	0.0	s	10 = 1 s	n	y	Parameter
10.32	**RO3 OFF delay**						
	Deactivation delay for relay output RO3. Defines the deactivation delay for RO3. See 10.25 RO1 ON delay.						
	0.0 … 3000.0	0.0	s	10 = 1 s	n	y	Parameter
10.51	**DI filter time**						
	Filter time constant for 10.01 DI status. Defines a filter time constant for 10.01 DI status.						
	0.3 … 100.0	5.0	ms	10 = 1 ms	n	y	Parameter
10.61	**DI1 inversion**						
	Inverts digital input DI1. Inversion selection for digital input DI1. 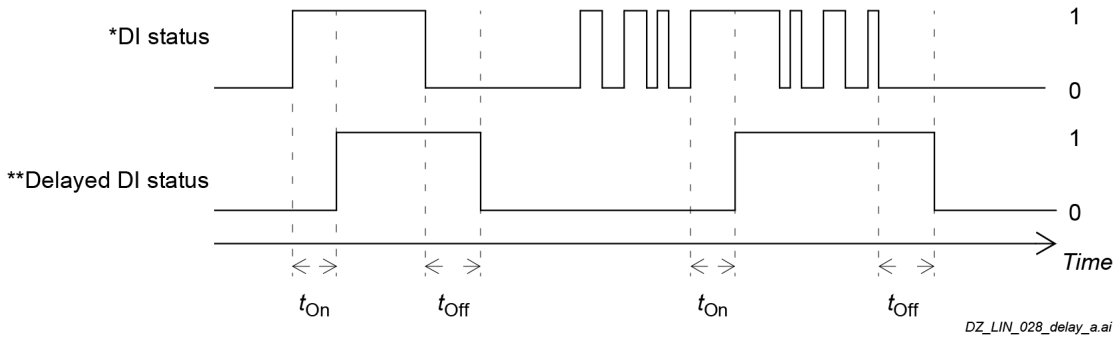 0: **Direct**; digital input DI1 is not inverted. 1: **Inverted**; digital input DI1 is inverted.						
	0 … 1	Direct	-	1 = 1	n	y	Parameter
10.62	**DI2 inversion**						
	Inverts digital input DI2. Inversion selection for digital input DI2. See 10.61 DI1 inversion.						
	0 … 1	Direct	-	1 = 1	n	y	Parameter
10.63	**DI3 inversion**						
	Inverts digital input DI3. Inversion selection for digital input DI3. See 10.61 DI1 inversion.						
	0 … 1	Direct	-	1 = 1	n	y	Parameter
10.64	**DI4 inversion**						
	Inverts digital input DI4. Inversion selection for digital input DI4. See 10.61 DI1 inversion.						
	0 … 1	Direct	-	1 = 1	n	y	Parameter
10.65	**DI5 inversion**						
	Inverts digital input DI5. Inversion selection for digital input DI5. See 10.61 DI1 inversion.						
	0 … 1	Direct	-	1 = 1	n	y	Parameter
10.66	**DI6 inversion**						
	Inverts digital input DI6. Inversion selection for digital input DI6. See 10.61 DI1 inversion.						

Index	Name						
	Text						
	Range	Default	Unit	Scale FbEq16	Volatile	Change running	Type
	0 … 1	Direct	-	1 = 1	n	y	Parameter
10.67	DIL inversion						
	Inverts digital input DIL. Inversion selection for digital input DIL. See 10.61 DI1 inversion.						
	0 … 1	Direct	-	1 = 1	n	y	Parameter
10.99	RO/DIO control word						
	Control word for relay outputs (RO) and digital inputs/outputs (DIO). Storage parameter to control relay outputs and digital inputs/outputs via e.g., a fieldbus. To control the relay outputs and the digital inputs/outputs of the unit, send a control word with the bit assignments shown below e.g., as Modbus I/O data (see 58.101 Data I/O 1 … 58.124 Data I/O 24). Example for relay output RO1: 58.101 Data I/O 1 = RO/DIO control word and 10.24 RO1 source = RO/DIO control word bit 0. Bit assignment:						
	0000h … FFFFh	-	-	1 = 1	n	y	Parameter

Bit	Name	Value	Remarks
0	RO1	1	Energized. Bit for relay output RO1. See 10.24 RO1 source.
1	RO2	1	Energized. Bit for relay output RO2. See 10.27 RO2 source.
2	RO3	1	Energized. Bit for relay output RO3. See 10.30 RO3 source.
3	reserved		
4	reserved		
5	reserved		
6	reserved		
7	reserved		
8	DIO1	1	Energized. Bit for digital input/output DIO1. See 11.06 DIO1 output source.
9	DIO2	1	Energized. Bit for digital input/output DIO2. See 11.10 DIO2 output source.
10 … 15	reserved		

11 Standard DIO, FI, FO

Configuration of digital input/outputs and frequency inputs/outputs.

Index	Name						
	Text						
	Range	Default	Unit	Scale FbEq16	Volatile	Change running	Type
11.01	DIO status						
	Status of digital inputs/outputs. Displays the status of DIO1 … DIO2. The activation/deactivation delays (if any are specified) are ignored. Bits 0 … 1 reflect the status of DIO1 … DIO2. **Example**: 000000000000010b = DIO2 is on, DIO1 is off: Bit assignment:						

Bit	Name	Value	Remarks
0	DIO1	1	On.
1	DIO2	1	On.

Index	Name						
	Text						
	Range	**Default**	**Unit**	**Scale FbEq16**	**Volatile**	**Change running**	**Type**
	2 … 15 reserved						
	0000h … FFFFh	-	-	1 = 1	y	n	Signal
11.02	**DIO delayed status**						
	Delayed status of digital inputs/outputs. Displays the delayed status of DIO1 … DIO2. This word is updated only after activation/deactivation delays (if any are specified). Bits 0 … 1 reflect the status of DIO1 … DIO2. **Example**: 000000000000010b = DIO2 is on, DIO1 is off: Bit assignment:						
	0000h … FFFFh	-	-	1 = 1	y	n	Signal
11.05	**DIO1 function**						
	Function of digital input/output DIO1. Selects whether DIO1 is used as a digital output or input, or a frequency input. 0: **Output**; DIO1 is used as a digital output. 1: **Input**; DIO1 is used as a digital input. 2: **Frequency**; DIO1 is used as a frequency input.						
	0 … 2	Output	-	1 = 1	n	y	Parameter
11.06	**DIO1 output source**						
	Source for digital input/output DIO1. Selects a signal/parameter bit to be connected to DIO1 when 11.05 DIO1 function = Output. **Other [bit]**; source selection. 0: **Not energized**; output is off. 1: **Energized**; output is on. 40: **RO/DIO control word bit0**; bit 0 of 10.99 RO/DIO control word. 41: **RO/DIO control word bit1**; bit 1 of 10.99 RO/DIO control word. 42: **RO/DIO control word bit2**; bit 2 of 10.99 RO/DIO control word. 43: **RO/DIO control word bit8**; bit 8 of 10.99 RO/DIO control word. 44: **RO/DIO control word bit9**; bit 9 of 10.99 RO/DIO control word.						
	0 … 44	Not energized	-	1 = 1	n	y	Parameter
11.07	**DIO1 ON delay**						
	Activation delay for digital input/output DIO1. Defines the activation delay for DIO1 (when used as a digital output or digital input).						

Bit	Name	Value	Remarks
0	DIO1	1	On.
1	DIO2	1	On.
2 … 15	reserved		

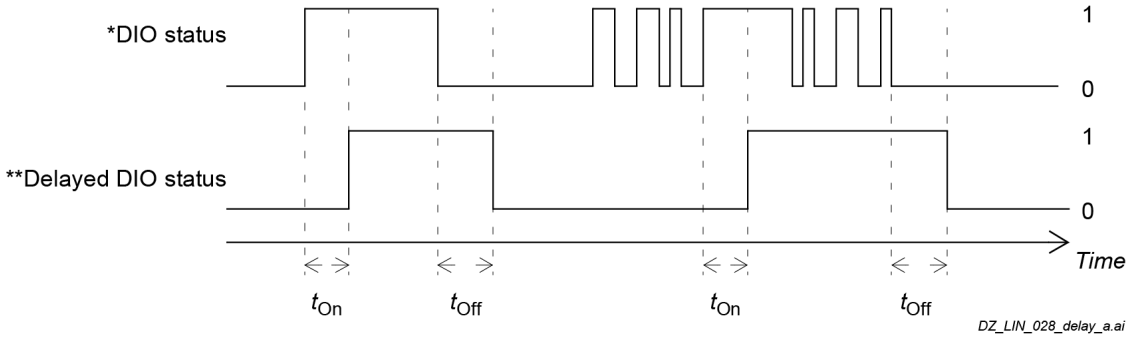

Index	Name						
	Text						
	Range	**Default**	**Unit**	**Scale FbEq16**	**Volatile**	**Change running**	**Type**
	t_{On} = 11.07 DIO1 ON delay t_{Off} = 11.08 DIO1 OFF delay *Electrical status of DIO (in input mode) or status of selected source (in output mode). Indicated by 11.01 DIO status. **Indicated by 11.02 DIO delayed status.						
	0.0 … 3000.0	0.0	s	10 = 1 s	n	y	Parameter
11.08	**DIO1 OFF delay**						
	Deactivation delay for digital input/output DIO1. Defines the deactivation delay for DIO1 (when used as a digital output or digital input). See 11.07 DIO1 ON delay.						
	0.0 … 3000.0	0.0	s	10 = 1 s	n	y	Parameter
11.09	**DIO2 function**						
	Function of digital input/output DIO2. Selects whether DIO2 is used as a digital output or input, or a frequency output. 0: **Output**; DIO2 is used as a digital output. 1: **Input**; DIO2 is used as a digital input. 2: **Frequency**; DIO2 is used as a frequency output.						
	0 … 2	Output	-	1 = 1	n	y	Parameter
11.10	**DIO2 output source**						
	Source for digital input/output DIO2. Selects a signal/parameter bit to be connected to DIO2 when 11.09 DIO2 function = Output. See 11.06 DIO1 output source.						
	0 … 44	Not energized	-	1 = 1	n	y	Parameter
11.11	**DIO2 ON delay**						
	Activation delay for digital input/output DIO2. Defines the activation delay for DIO2 (when used as a digital output or digital input). See 11.07 DIO1 ON delay.						
	0.0 … 3000.0	0.0	s	10 = 1 s	n	y	Parameter
11.12	**DIO2 OFF delay**						
	Deactivation delay for digital input/output DIO2. Defines the deactivation delay for DIO2 (when used as a digital output or digital input). See 11.07 DIO1 ON delay.						
	0.0 … 3000.0	0.0	s	10 = 1 s	n	y	Parameter
11.21	**DIO1 inversion**						
	Inverts digital input/output DIO1. Inversion selection for digital input/output DIO1. 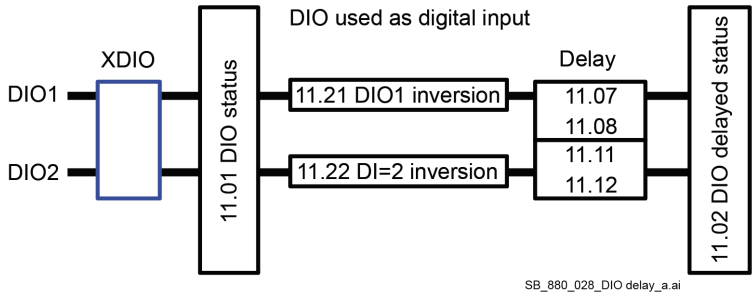 						

Index	Name						
	Text						
	Range	**Default**	**Unit**	**Scale FbEq16**	**Volatile**	**Change running**	**Type**
	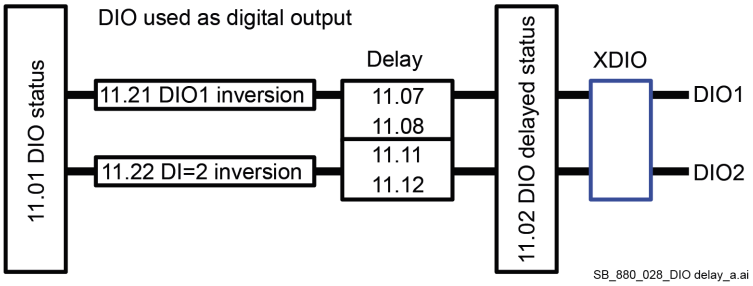 0: **Direct**; digital input/output DIO1 is not inverted. 1: **Inverted**; digital input/output DIO1 is inverted.						
	0 … 1	Direct	-	1 = 1	n	y	Parameter
11.22	**DIO2 inversion**						
	Inverts digital input/output DIO2. Inversion selection for digital input/output DIO2. See 11.21 DIO1 inversion.						
	0 … 1	Direct	-	1 = 1	n	y	Parameter
11.38	**Freq in 1 actual value**						
	Unscaled value of frequency input 1. Displays the value of frequency input 1 in Hz (via DIO1 when it is used as a frequency input) before scaling. See 11.42 Freq in 1 min.						
	0 … 16000	-	Hz	1 = 1 Hz	y	n	Signal
11.39	**Freq in 1 scaled**						
	Scaled value of frequency input 1. Displays the value of frequency input 1 (via DIO1 when it is used as a frequency input) after scaling. See 11.42 Freq in 1 min.						
	-32768.000 … 32767.000	-	-	1 = 1	y	n	Signal
11.42	**Freq in 1 min**						
	Minimum frequency of frequency input 1 (DIO1). Defines the minimum input frequency for frequency input 1 in Hz (via DIO1 when it is used as a frequency input). Parameters 11.42 and 11.43 set the low and high limit of the frequency input signal in Hz. Scaling parameters 11.44 and 11.45 define the internal values that correspond to these limits as follows: 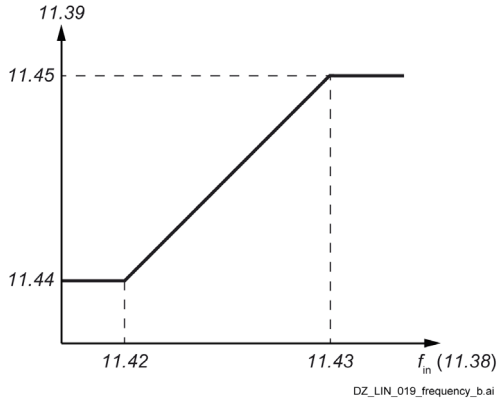						
	0 … 16000	0	Hz	1 = 1 Hz	n	y	Parameter

Index	Name						
	Text						
	Range	**Default**	**Unit**	**Scale FbEq16**	**Volatile**	**Change running**	**Type**
11.43	**Freq in 1 max**						
	Maximum frequency for frequency input 1 (DIO1). Defines the maximum input frequency for frequency input 1 in Hz (via DIO1 when it is used as a frequency input). See 11.42 Freq in 1 min.						
	0 … 16000	16000	Hz	1 = 1 Hz	n	y	Parameter
11.44	**Freq in 1 at scaled min**						
	Internal value corresponding to the minimum value of frequency input 1 (DIO1). Defines the value that corresponds internally to the minimum input frequency defined by 11.42 Freq in 1 min (via DIO1 when it is used as a frequency input). See 11.42 Freq in 1 min.						
	-32768.000 … 32767.000	0.000	-	1 = 1	n	y	Parameter
11.45	**Freq in 1 at scaled max**						
	Internal value corresponding to the maximum value of frequency input 1 (DIO1). Defines the value that corresponds internally to the maximum input frequency defined by 11.43 Freq in 1 max (via DIO1 when it is used as a frequency input). See 11.42 Freq in 1 min.						
	-32768.000 … 32767.000	1500.000	-	1 = 1	n	y	Parameter
11.54	**Freq out 1 actual value**						
	Value of frequency output 1 (DIO2). Displays the value of frequency output 1 after scaling in Hz (via DIO2 when it is used as a frequency output). See 11.58 Freq out 1 src min.						
	0 … 16000	-	Hz	1 = 1 Hz	y	n	Signal
11.55	**Freq out 1 source**						
	Source for frequency output 1 (DIO2). Selects a signal/parameter to be connected to frequency output 1 (via DIO2 when it is used as a frequency output). **Other**; source selection. 0: **Zero**; output not in use.						
	0 … 0	Zero	-	1 = 1	n	y	Parameter
11.58	**Freq out 1 src min**						
	Internal value corresponding to minimum value of frequency output 1 (DIO2). Defines the internal value that corresponds to the minimum frequency of frequency output 1 (via DIO2 when it is used as a frequency output). Scaling parameters 11.58 and 11.59 set the low and high internal limits that corresponds to the frequency output values in Hz defined by parameters 11.60 and 11.61: 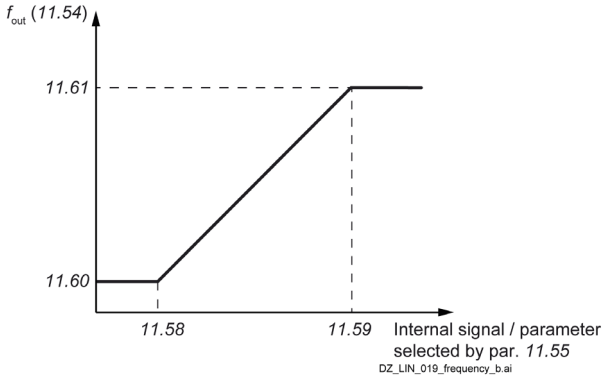 						

Index	Name						
	Text						
	Range	**Default**	**Unit**	**Scale FbEq16**	**Volatile**	**Change running**	**Type**
	Setting parameter 11.58 as maximum value and parameter 11.59 as minimum value inverts the output: 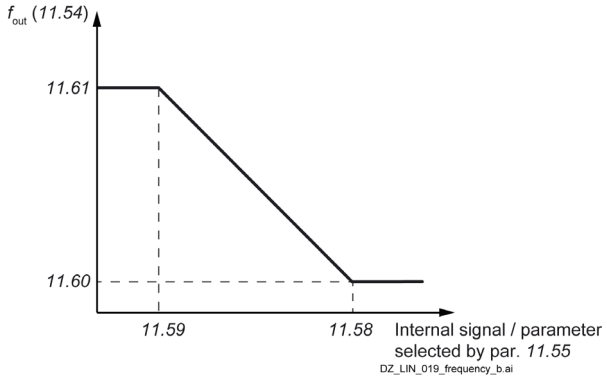						
	-32768.000 … 32767.000	0.000	-	1 = 1	n	y	Parameter
11.59	**Freq out 1 src max**						
	Internal value corresponding to maximum value of frequency output 1 (DIO2). Defines the internal value that corresponds to the maximum frequency of frequency output 1 (via DIO2 when it is used as a frequency output). See 11.58 Freq out 1 src min.						
	-32768.000 … 32767.000	1500.000	-	1 = 1	n	y	Parameter
11.60	**Freq out 1 at src min**						
	Minimum value of frequency output 1 (DIO2). Defines the minimum frequency of frequency output 1 in Hz (via DIO2 when it is used as a frequency output). See 11.58 Freq out 1 src min.						
	0 … 16000	0	Hz	1 = 1 Hz	n	y	Parameter
11.61	**Freq out 1 at src max**						
	Maximum value of frequency output 1 (DIO2). Defines the maximum frequency of frequency output 1 in Hz (via DIO2 when it is used as a frequency output). See 11.58 Freq out 1 src min.						
	0 … 16000	16000	Hz	1 = 1 Hz	n	y	Parameter

12 Standard AI

Configuration of standard analog inputs.

Index	Name						
	Text						
	Range	**Default**	**Unit**	**Scale FbEq16**	**Volatile**	**Change running**	**Type**
12.03	**AI supervision function**						
	Supervision function analog inputs. Selects how the unit reacts when AI1 … AI3 signals move out of the minimum and/or maximum limits specified for the input. The inputs and the limits to be observed are selected by 12.04 AI supervision selection. 0: **No action**; no action taken. 1: **Fault**; the event generates fault 5551 AI supervision. 2: **Warning**; the event generates warning 1127 AI supervision.						
	0 … 2	No action	-	1 = 1	n	y	Parameter

Index	Name						
	Text						
	Range	Default	Unit	Scale FbEq16	Volatile	Change running	Type
12.04	**AI supervision selection**						
	Activation of analog input supervision. Specifies which limits of AI1 … AI3 are supervised by12.03 AI supervision function: Bit assignment:						

Bit	Name	Value	Remarks
0	AI1 < MIN	1	Minimum limit supervision of AI1 active. See12.17 AI1 min.
1	AI1 > MAX	1	Maximum limit supervision of AI1 active. See 12.18 AI1 max.
2	AI2 < MIN	1	Minimum limit supervision of AI2 active. See12.27 AI2 min.
3	AI2 > MAX	1	Maximum limit supervision of AI2 active. See 12.28 AI2 max.
4	AI3 < MIN	1	Minimum limit supervision of AI3 active. See12.37 AI3 min.
5	AI3 > MAX	1	Maximum limit supervision of AI3 active. See 12.38 AI3 max.
6 … 15	reserved		

The supervision applies a margin of 0.5 V or 1.0 mA, see12.15 AI1 unit selection, to the limits.
Examples:
- 12.17 AI1 min = 4.000 V. The minimum limit supervision activates at values lower than 3.500 V. The limit supervision clears at values greater than 4.000 V.
- 12.18 AI1 max = 7.000 V. The maximum limit supervision activates at values greater than 7.500 V. The limit supervision clears at values lower than 7.000 V.
- 12.17 AI1 min = 4.000 mA. The minimum limit supervision activates at values lower than 3.000 mA. The limit supervision clears at values greater than 4.000 mA.
- 12.18 AI1 max = 7.000 mA. The maximum limit supervision activates at values greater than 8.000 mA. The limit supervision clears at values lower than 7.000 mA.

	0000h … FFFFh	0000h	-	1 = 1	n	y	Parameter
12.11	**AI1 actual value**						
	Value of analog input AI1. Displays the value of AI1 in mA or V corresponding to the setting of jumper J1 (see chapter Jumpers and switches of this manual).						
	-22.000 … 22.000 or -11.000 … 11.000	-	mA or V	1000 = 1 mA or V	y	n	Signal
12.12	**AI1 scaled value**						
	Scaled value of analog input AI1. Displays the value of AI1 after scaling. See 12.19 AI1 scaled at AI1 min and 12.20 AI1 scaled at AI1 max.						
	-32768.000 … 32767.000	-	-	1 = 1	y	n	Signal
12.14	**AI1 offset**						
	Offset for analog input AI1. Adds an offset to 12.11 AI1 actual value.						
	-0.100 … 0.100	0.000	mA or V	1000 = 1 mA or V	n	y	Parameter
12.15	**AI1 unit selection**						
	Unit selection of analog input AI1. Selects the unit for readings and settings related to AI1. Set to either mA or V corresponding to the setting of jumper J1 (see chapter Jumpers and switches of this manual). 2: **V**; volts. 10: **mA**; milliamps.						
	2 … 10	V	-	1 = 1	n	y	Parameter

Index	Name						
	Text						
	Range	Default	Unit	Scale FbEq16	Volatile	Change running	Type
12.16	**AI1 filter time**						
	Filter time constant of analog input AI1. Defines the filter time constant for AI1. 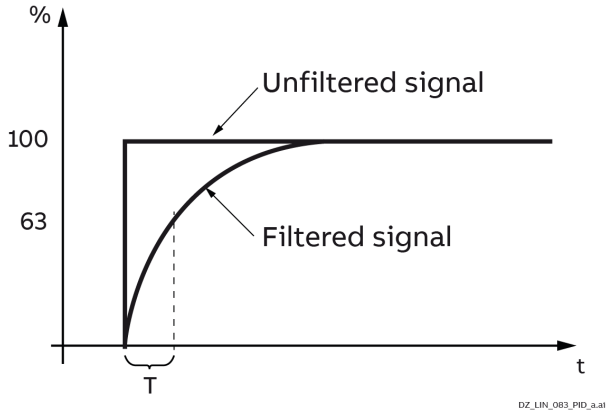 $O = I \times (1-e^{t/T})$ I = filter input (step) O = filter output t = time T = filter time constant The signal is also filtered due to the analog input hardware (approximately 0.25 ms time constant). This cannot be changed by any parameter.						
	0.000 … 30.000	0.100	s	1000 = 1 s	n	y	Parameter
12.17	**AI1 min**						
	Minimum value of analog input AI1. Defines the minimum input value for AI1 in mA or V. Parameters 12.17 and 12.18 set the low and high limit of the analog input signal in mA or V. Scaling parameters 12.19 and 12.20 define the internal values that correspond to these limits as follows: 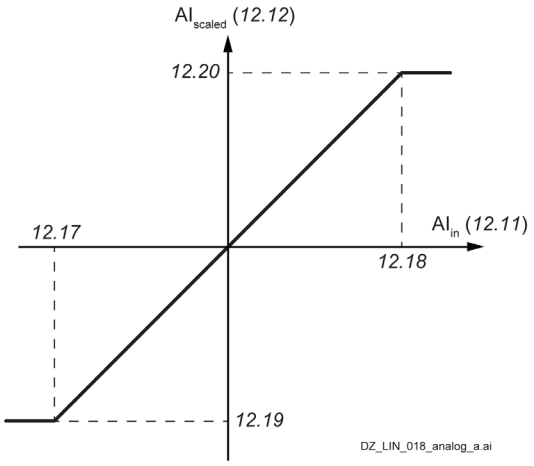 						
	-22.000 … 22.000 or -11.000 … 11.000	-20.000 or -10.000	mA or V	1000 = 1 mA or V	n	y	Parameter
12.18	**AI1 max**						
	Maximum value of analog input AI1. Defines the maximum input value for AI1 in mA or V. See 12.17 AI1 min.						
	-22.000 … 22.000 or -11.000 … 11.000	20.000 or 10.000	mA or V	1000 = 1 mA or V	n	y	Parameter

Index	Name						
	Text						
	Range	Default	Unit	Scale FbEq16	Volatile	Change running	Type
12.19	**AI1 scaled at AI1 min**						
	Internal value corresponding to minimum analog input AI1 value. Defines the internal value that corresponds to the minimum AI1 value defined by 12.17 AI1 min. Changing the polarity settings of 12.19 and 12.20 can effectively invert the analog input. See 12.17 AI1 min.						
	-32768.000 … 32767.000	-100.000	-	1 = 1	n	y	Parameter
12.20	**AI1 scaled at AI1 max**						
	Internal value corresponding to maximum analog input AI1 value. Defines the internal value that corresponds to the maximum AI1 value defined by 12.18 AI1 max. See 12.17 AI1 min.						
	-32768.000 … 32767.000	100.000	-	1 = 1	n	y	Parameter
12.21	**AI2 actual value**						
	Value of analog input AI2. Displays the value of AI2 in mA or V corresponding to the setting of jumper J2 (see chapter Jumpers and switches of this manual).						
	-22.000 … 22.000 or -11,000 … 11,000	-	mA or V	1000 = 1 mA or V	y	n	Signal
12.22	**AI2 scaled value**						
	Scaled value of analog input AI2. Displays the value of analog input AI2 after scaling. See parameters 12.29 AI2 scaled at AI2 min and 12.30 AI2 scaled at AI2 max.						
	-32768.000 … 32767.000	-	-	1 = 1	y	n	Signal
12.24	**AI2 offset**						
	Offset for analog input AI2. Adds an offset to 12.21 AI2 actual value.						
	-0.100 … 0.100	0.000	mA or V	1000 = 1 mA or V	n	y	Parameter
12.25	**AI2 unit selection**						
	Unit selection of analog input AI2. Selects the unit for readings and settings related to AI2. Set to either mA or V corresponding to the setting of jumper J2 (see chapter Jumpers and switches of this manual). 2: **V**; volts. 10: **mA**; milliamps.						
	2 … 10	V	-	1 = 1	n	y	Parameter
12.26	**AI2 filter time**						
	Filter time constant of analog input AI2. Defines the filter time constant for AI2. See 12.16 AI1 filter time.						
	0.000 … 30.000	0.100	s	1000 = 1 s	n	y	Parameter
12.27	**AI2 min**						
	Minimum value of analog input AI2. Defines the minimum input value for analog input AI2 in mA or V. Parameters 12.27 and 12.28 set the low and high limit of the analog input signal in mA or V. Scaling parameters 12.29 and 12.30 define the internal values that correspond to these limits as follows:						

Index	Name						
	Text						
	Range	Default	Unit	Scale FbEq16	Volatile	Change running	Type
	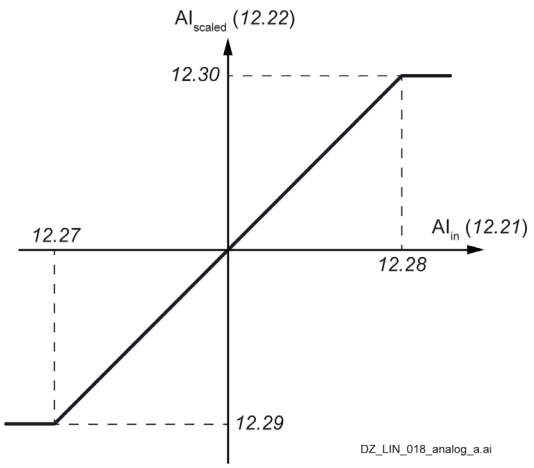						
	-22.000 … 22.000 or -11,000 … 11,000	-20.000 or -10.000	mA or V	1000 = 1 mA or V	n	y	Parameter
12.28	**AI2 max**						
	Maximum value of analog input AI2. Defines the maximum input value for AI2 in mA or V. See 12.27 AI2 min.						
	-22.000 … 22.000 or -11,000 … 11,000	20.000 or 10.000	mA or V	1000 = 1 mA or V	n	y	Parameter
12.29	**AI2 scaled at AI2 min**						
	Internal value corresponding to minimum analog input AI2 value. Defines the internal value that corresponds to the minimum AI2 value defined by 12.27 AI2 min. Changing the polarity settings of 12.29 and 12.30 can effectively invert the analog input. See 12.27 AI2 min.						
	-32768.000 … 32767.000	-100.000	-	1 = 1	n	y	Parameter
12.30	**AI2 scaled at AI2 max**						
	Internal value corresponding to maximum analog input AI2 value. Defines the internal value that corresponds to the maximum AI2 value defined by 12.28 AI2 max. See 12.27 AI2 min.						
	-32768.000 … 32767.000	100.000	-	1 = 1	n	y	Parameter
12.31	**AI3 actual value**						
	Value of analog input AI3. Displays the value of AI3 in V.						
	-11.000 … 11.000	-	V	1000 = 1 V	y	n	Signal
12.32	**AI3 scaled value**						
	Scaled value of analog input AI3. Displays the value of AI3 after scaling. See 12.39 AI3 scaled at AI3 min and 12.40 AI3 scaled at AI3 max.						
	-32768.000 … 32767.000	-	-	1 = 1	y	n	Signal
12.34	**AI3 offset**						
	Offset for analog input AI3. Adds an offset to 12.31 AI3 actual value.						
	-0.100 … 0.100	0.000	V	1000 = 1 V	n	y	Parameter
12.36	**AI3 filter time**						
	Filter time constant of analog input AI3. Defines the filter time constant for analog input AI3. See 12.16 AI1 filter time.						

Index	Name						
	Text						
	Range	**Default**	**Unit**	**Scale FbEq16**	**Volatile**	**Change running**	**Type**
	0.000 … 30.000	0.100	s	1000 = 1 s	n	y	Parameter
12.37	**AI3 min**						
	Minimum value of analog input AI3. Defines the minimum input value for AI3 in V. Parameters 12.37 and 12.38 set the low and high limit of the analog input signal in V. Scaling parameters 12.39 and 12.40 define the internal values that correspond to these limits as follows: 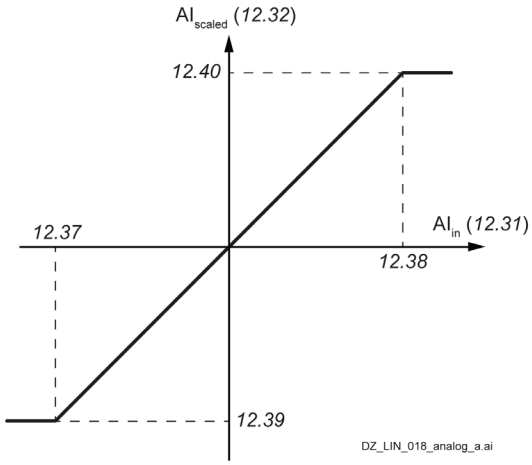 						
	-11.000 … 11.000	-10.000	V	1000 = 1 V	n	y	Parameter
12.38	**AI3 max**						
	Maximum value of analog input AI3. Defines the maximum input value for AI3 in V. See 12.37 AI3 min.						
	-11.000 … 11.000	10.000	V	1000 = 1 V	n	y	Parameter
12.39	**AI3 scaled at AI3 min**						
	Internal value corresponding to minimum analog input AI3 value. Defines the internal value that corresponds to the minimum AI3 value defined by 12.37 AI3 min. Changing the polarity settings of 12.39 and 12.40 can effectively invert the analog input. See 12.37 AI3 min.						
	-32768.000 … 32767.000	-100.000	-	1 = 1	n	y	Parameter
12.40	**AI3 scaled at AI3 max**						
	Internal value corresponding to maximum analog input AI3 value. Defines the internal value that corresponds to the maximum AI3 value defined by 12.38 AI3 max. See 12.37 AI3 min.						
	-32768.000 … 32767.000	100.000	-	1 = 1	n	y	Parameter

13 Standard AO

Configuration of standard analog outputs.

Index	Name						
	Text						
	Range	**Default**	**Unit**	**Scale FbEq16**	**Volatile**	**Change running**	**Type**
13.11	**AO1 actual value**						
	Value of analog output AO1. Displays the value of AO1 in mA or V corresponding to the setting of jumper J5 (see chapter Jumpers and switches of this manual).						
	0.000 … 22.000 or -10,000 … 10,000	-	mA or V	1000 = 1 mA or V	y	n	Signal

Index	Name						
	Text						
	Range	**Default**	**Unit**	**Scale FbEq16**	**Volatile**	**Change running**	**Type**
13.12	**AO1 source**						
	Source for analog output AO1. Selects a signal/parameter to be connected to AO1. **Other**; source selection. 0: **Zero**; none. 37: **AO1 data storage**; see 13.91 AO1 data storage. 38: **AO2 data storage**; see 13.92 AO2 data storage.						
	0 … 38	Zero	-	1 = 1	n	y	Parameter
13.15	**AO1 unit selection**						
	Unit selection of analog output AO1. Selects the unit for readings and settings related to AO1. Set to either mA or V corresponding to the setting of jumper J5 (see chapter Jumpers and switches of this manual). 2: **V**; volts. 10: **mA**; milli amperes.						
	2 … 10	V	-	1 = 1	n	y	Parameter
13.16	**AO1 filter time**						
	Filter time constant of analog output AO1. Defines the filter time constant for AO1. 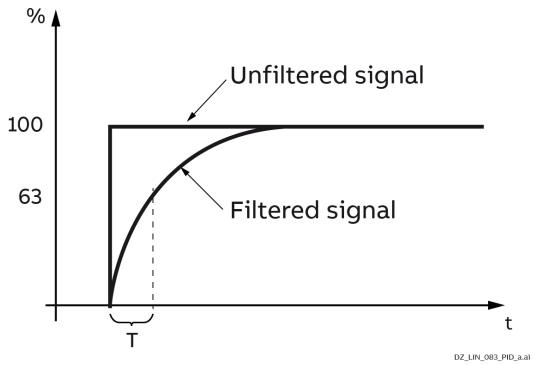 $O = I \times (1-e^{t/T})$ I = filter input (step) O = filter output t = time T = filter time constant						
	0.000 … 30.000	0.100	s	1000 = 1 s	n	y	Parameter
13.17	**AO1 source min**						
	Internal value corresponding to minimum analog output AO1 value. Defines the internal value that corresponds to the minimum required AO1 value. Scaling parameters 13.17 and 13.18 set the low and high internal limits that corresponds to the analog output values in mA or V defined by parameters 13.19 and 13.20:						

Index	Name						
	Text						
	Range	Default	Unit	Scale FbEq16	Volatile	Change running	Type
	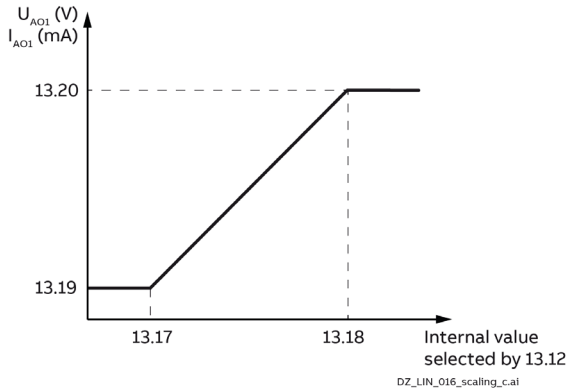 Setting parameter 13.17 as maximum value and parameter 13.18 as minimum value inverts the output: 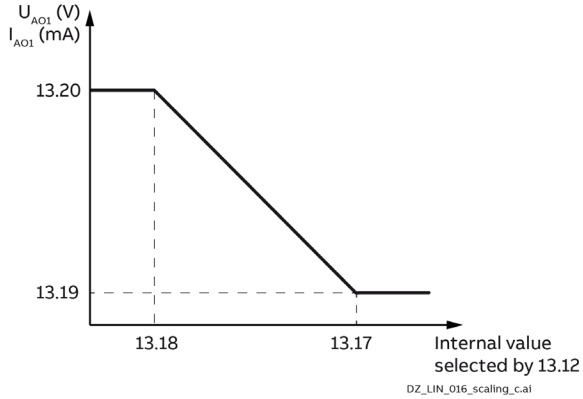						
	-32768.0 … 32767.0	-100.0	-	1 = 1	n	y	Parameter
13.18	**AO1 source max**						
	Internal value corresponding to maximum analog output AO1 value. Defines the internal value that corresponds to the maximum required AO1 value. See 13.17 AO1 source min.						
	-32768.0 … 32767.0	100.0	-	1 = 1	n	y	Parameter
13.19	**AO1 out at AO1 src min**						
	Minimum analog output AO1 value. Defines the minimum output value for AO1 in mA or V. See 13.17 AO1 source min.						
	0.000 … 22.000 or -10,000 … 10,000	0.000 or -10.000	mA or V	1000 = 1 mA or V	n	y	Parameter
13.20	**AO1 out at AO1 src max**						
	Maximum analog output AO1 value. Defines the maximum output value for AO1 in mA or V. See 13.17 AO1 source min.						
	0.000 … 22.000 or -10,000 … 10,000	20.000 or 10.000	mA or V	1000 = 1 mA or V	n	y	Parameter
13.21	**AO2 actual value**						
	Value of analog output AO2. Displays the value of AO2 in V.						
	-10.000 … 10.000	-	V	1000 = 1 V	y	n	Signal

Index	Name						
	Text						
	Range	**Default**	**Unit**	**Scale FbEq16**	**Volatile**	**Change running**	**Type**
13.22	**AO2 source**						
	Source for analog output AO2. Selects a signal/parameter to be connected to AO2. See 13.12 AO1 source.						
	0 … 38	Zero	-	1 = 1	n	y	Parameter
13.26	**AO2 filter time**						
	Filter time constant of analog output AO2. Defines the filter time constant for AO2. See 13.16 AO1 filter time.						
	0.000 … 30.000	0.100	s	1000 = 1 s	n	y	Parameter
13.27	**AO2 source min**						
	Internal value corresponding to minimum analog output AO2 value. Defines the internal value that corresponds to the minimum required AO2 value. Scaling parameters 13.27 and 13.28 set the low and high internal limits that corresponds to the analog output values in V defined by parameters 13.29 and 13.30: 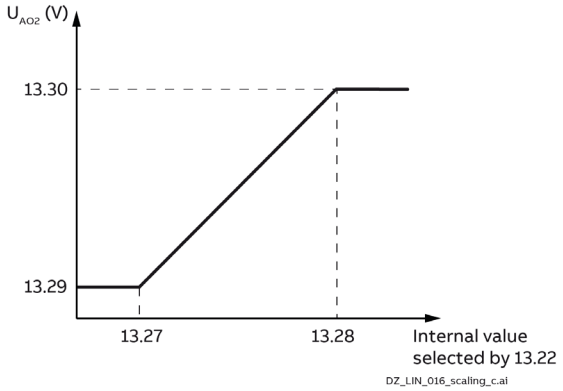 Setting parameter 13.27 as maximum value and 13.28 as minimum value inverts the output: 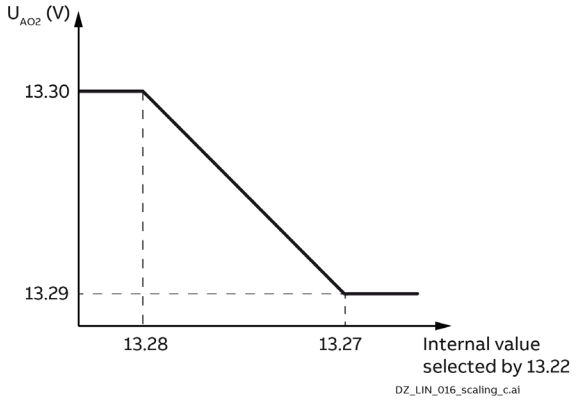 						
	-32768.0 … 32767.0	-100.0	-	1 = 1	n	y	Parameter
13.28	**AO2 source max**						
	Internal value corresponding to maximum analog output AO2 value. Defines the internal value that corresponds to the maximum required AO2 value. See 13.27 AO2 source min.						
	-32768.0 … 32767.0	100.0	-	1 = 1	n	y	Parameter
13.29	**AO2 out at AO2 src min**						
	Minimum analog output AO2 value. Defines the minimum output value for AO2 in V. See 13.27 AO2 source min.						

Index	Name						
	Text						
	Range	**Default**	**Unit**	**Scale FbEq16**	**Volatile**	**Change running**	**Type**
	-10.000 … 10.000	-10.000	V	1000 = 1 V	n	y	Parameter
13.30	**AO2 out at AO2 src max**						
	Maximum analog output AO2 value. Defines the maximum output value for AO2 in V. See 13.27 AO2 source min.						
	-10.000 … 10.000	10.000	V	1000 = 1 V	n	y	Parameter
13.91	**AO1 data storage**						
	Storage parameter for analog output AO1. Storage parameter to set analog output AO1 via e.g., a fieldbus. To set analog output AO1 send a value e.g., via Modbus I/O data (see 58.101 Data I/O 1 … 58.124 Data I/O 24). **Example**: 58.101 Data I/O 1 = AO1 data storage and 13.12 AO1 source = AO1 data storage.						
	-327.68 … 327.67	0.00	-	100 = 1	n	y	Parameter
13.92	**AO2 data storage**						
	Storage parameter for analog output AO2. Storage parameter to set analog output AO2 via e.g., a fieldbus. To set analog output AO2 send a value e.g., via Modbus I/O data (see 58.101 Data I/O 1 … 58.124 Data I/O 24). Example: 58.101 Data I/O 1 = AO2 data storage and 13.22 AO2 source = AO2 data storage.						
	-327.68 … 327.67	0.00	-	100 = 1	n	y	Parameter

14 I/O extension module 1

Configuration of I/O extension module 1.
The contents of the parameter group varies according to the selected I/O extension module type.

Index	Name						
	Text						
	Range	**Default**	**Unit**	**Scale FbEq16**	**Volatile**	**Change running**	**Type**
14.01	**Module 1 type**						
	First I/O extension module. Activates (and specifies the type of) I/O extension module 1. 0: **None**; inactive. 1: **FIO-01**; adds 4 DIO and 2 RO. 2: **FIO-11**; adds 2 DIO, 3 AI and 1 AO. 3: **FDIO-01**; adds 3 DI and 2 RO. 4: **FAIO-01**; adds 2 AI and 2 AO.						
	0 … 4	None	-	1 = 1	n	n	Parameter
14.02	**Module 1 location**						
	First I/O extension module location. Activates and specifies the slot (1…3) on the unit's control board into which the I/O extension module 1 is installed. Alternatively, specifies the node ID of the slot on a FEA-03 extension module. 1: **Slot1**; I/O extension module 1 is located in Slot1. 2: **Slot2**; I/O extension module 1 is located in Slot2. 3: **Slot3**; I/O extension module 1 is located in Slot3. **04 … 254**: Node ID of the slot on the FEA-0x extension module. **Note**: The node ID of the slot on a FEA-03 extension module can be typed in. This is only possible with Drive Composer.						
	1 … 254	Slot1	-	1 = 1	n	n	Parameter

Index	Name						
	Text						
	Range	Default	Unit	Scale FbEq16	Volatile	Change running	Type
14.03	**Module 1 status**						
	First I/O extension module status. 0: **No option**; no module detected in the specified slot. 1: **No communication**; a module has been detected but cannot be communicated with. 2: **Unknown**; the module type is unknown. 15: **FIO-01**; a FIO-01 has been detected and is active. 20: **FIO-11**; a FIO-11 has been detected and is active. 23: **FDIO-01**; a FDIO-01 has been detected and is active. 24: **FAIO-01**; a FAIO-01 has been detected and is active.						
	0 … 24	-	-	1 = 1	y	n	Signal
14.05	**DI status**						
	Status of digital inputs. (Visible when 14.01 Module 1 type = FDIO-01) Displays the electrical status of DI1 … DI3. The activation/deactivation delays of the inputs (if any are specified) are ignored. A filtering time is defined by 14.08 DI filter time. Bits 0 … 2 reflect the status of DI1 … DI3. **Example**: 0000000000000011b = DI2 and DI1 are on, DI3 is off. Bit assignment:						

Bit	Name	Value	Remarks
0	DI1	1	On.
1	DI2	1	On.
2	DI3	1	On.
3 … 15	reserved		

	0000h … FFFFh	-	-	1 = 1	y	n	Signal
14.05	**DIO status**						
	Status of digital input/outputs. (Visible when 14.01 Module 1 type = FIO-01 or FIO-11). Displays the status of DIO1 … DIO2/DIO4 on the extension module. The activation/deactivation delays (if any are specified) are ignored. A filtering time (for input mode) is defined by 14.08 DIO filter time. Bit 0 … 3 reflect the status of DIO1 … DIO4. The number of active bits in this parameter depends on the number of digital input/outputs on the extension module. **Example**: 0000000000001001b = DIO1 and DIO4 are on, remainder are off. Bit assignment:						

Bit	Name	Value	Remarks
0	DIO1	1	On.
1	DIO2	1	On.
2	DIO3	1	On.
3	DIO4	1	On.
4 … 15	reserved		

	0000h … FFFFh	-	-	1 = 1	y	n	Signal
14.06	**DI delayed status**						
	Delayed status of digital inputs. (Visible when 14.01 Module 1 type = FDIO-01)						

Index	Name						
	Text						
	Range	**Default**	**Unit**	**Scale FbEq16**	**Volatile**	**Change running**	**Type**
	Displays the delayed status of DI1 … DI3. This word is updated only after activation/deactivation delays (if any are specified). Bits 0 … 2 reflect the status of DI1 … DI3. **Example**: 0000000000000011b = DI2 and DI1 are on, DI3 is off. Bit assignment: **Bit** / **Name** / **Value** / **Remarks** 0 / DI1 / 1 / On. 1 / DI2 / 1 / On. 2 / DI3 / 1 / On. 3 … 15 / reserved						
	0000h … FFFFh	-	-	1 = 1	y	n	Signal
14.06	**DIO delayed status**						
	Delayed status of digital input/outputs. (Visible when 14.01 Module 1 type = FIO-01 or FIO-11). Displays the delayed status of DIO1 … DIO2/DIO4 on the extension module. This word is updated only after activation/deactivation delays (if any are specified). Bit 0 … 3 reflect the status of DIO1 … DIO4. The number of active bits in this parameter depends on the number of digital input/outputs on the extension module. **Example**: 0000000000000001001b = DIO1 and DIO4 are on, remainder are off. Bit assignment: **Bit** / **Name** / **Value** / **Remarks** 0 / DIO1 / 1 / On. 1 / DIO2 / 1 / On. 2 / DIO3 / 1 / On. 3 / DIO4 / 1 / On. 4 … 15 / reserved						
	0000h … FFFFh	-	-	1 = 1	y	n	Signal
14.08	**DI filter time**						
	Filter time constant for 14.05 DI status. (Visible when 14.01 Module 1 type = FDIO-01) Defines a filter time constant for 14.05 DI status.						
	0.8 … 100.0	10.0	ms	10 = 1 ms	n	y	Parameter
14.08	**DIO filter time**						
	Filter time constant for 14.05 DIO status. (Visible when 14.01 Module 1 type = FIO-01 or FIO-11) Defines a filter time constant for 14.05 DIO status.						
	0.8 … 100.0	10.0	ms	10 = 1 ms	n	y	Parameter
14.09	**DIO1 function**						
	Function of digital input/output DIO1. (Visible when 14.01 Module 1 type = FIO-01 or FIO-11) Selects whether DIO1 of the extension module is used as a digital input or output. 0: **Output**; DIO1 is used as a digital output. 1: **Input**; DIO1 is used as a digital input.						
	0 … 1	Input	-	1 = 1	n	y	Parameter

Index	Name						
	Text						
	Range	**Default**	**Unit**	**Scale FbEq16**	**Volatile**	**Change running**	**Type**
14.11	**DIO1 output source**						
	Source for digital input/output DIO1. (Visible when 14.01 Module 1 type = FIO-01 or FIO-11) Selects a signal/parameter bit to be connected to DIO1 of the extension module when parameter 14.09 DIO1 function = Output. **Other [bit]**; source selection. 0: **Not energized**; output is off. 1: **Energized**; output is on. 40: **RO/DIO control word bit0**; bit 0 of 10.99 RO/DIO control word. 41: **RO/DIO control word bit1**; bit 1 of 10.99 RO/DIO control word. 42: **RO/DIO control word bit2**; bit 2 of 10.99 RO/DIO control word. 43: **RO/DIO control word bit8**; bit 8 of 10.99 RO/DIO control word. 44: **RO/DIO control word bit9**; bit 9 of 10.99 RO/DIO control word.						
	0 … 44	Not energized	-	1 = 1	n	y	Parameter
14.12	**DI1 ON delay**						
	Activation delay for digital input DI1. (Visible when 14.01 Module 1 type = FDIO-01) Defines the activation delay for DI1. 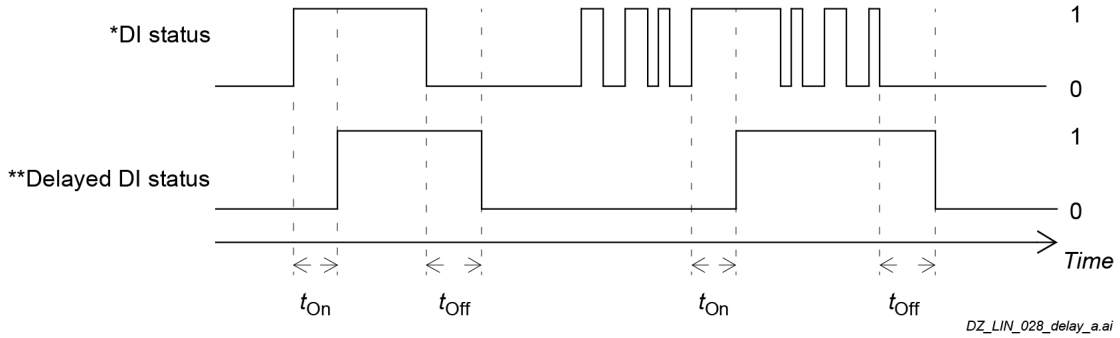 t_{On} = 14.12 DI1 ON delay t_{Off} = 14.13 DI1 OFF delay *Electrical status of digital input. Indicated by 14.05 DI status. **Indicated by 14.06 DI delayed status.						
	0.00 … 3000.00	0.00	s	10 = 1 s	n	y	Parameter
14.12	**DIO1 ON delay**						
	Activation delay for digital input/output DIO1. (Visible when 14.01 Module 1 type = FIO-01 or FIO-11) Defines the activation delay for DIO1. 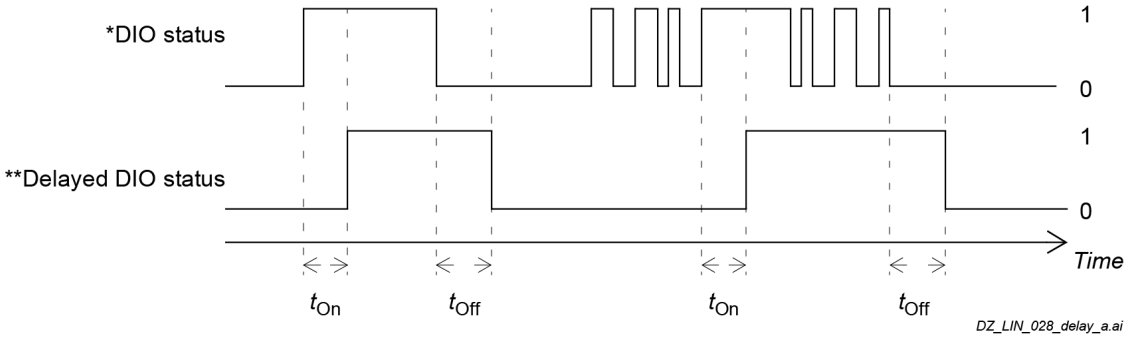 t_{On} = 14.12 DIO1 ON delay t_{Off} = 14.13 DIO1 OFF delay						

Index	Name						
	Text						
	Range	**Default**	**Unit**	**Scale FbEq16**	**Volatile**	**Change running**	**Type**
	*Electrical status of DIO (in input mode) or status of selected source (in output mode). Indicated by 14.05 DIO status. **Indicated by 14.06 DIO delayed status.						
	0.00 … 3000.00	0.00	s	10 = 1 s	n	y	Parameter
14.13	**DI1 OFF delay**						
	Deactivation delay for digital input DI1. (Visible when 14.01 Module 1 type = FDIO-01) Defines the deactivation delay for DI1. See 14.12 DI1 ON delay.						
	0.00 … 3000.00	0.00	s	10 = 1 s	n	y	Parameter
14.13	**DIO1 OFF delay**						
	Deactivation delay for digital input/output DIO1. (Visible when 14.01 Module 1 type = FIO-01 or FIO-11) Defines the deactivation delay for DIO1. See 14.12 DIO1 ON delay.						
	0.00 … 3000.00	0.00	s	10 = 1 s	n	y	Parameter
14.14	**DIO2 function**						
	Function of digital input/output DIO2. (Visible when 14.01 Module 1 type = FIO-01 or FIO-11) Selects whether DIO2 of the extension module is used as a digital input or output. 0: **Output**; DIO2 is used as a digital output. 1: **Input**; DIO2 is used as a digital input.						
	0 … 1	Input	-	1 = 1	n	y	Parameter
14.16	**DIO2 output source**						
	Source for digital input/output DIO2. (Visible when 14.01 Module 1 type = FIO-01 or FIO-11) Selects a signal/parameter bit to be connected to DIO2 when parameter 14.14 DIO2 function = Output. See 14.11 DIO1 output source.						
	0 … 44	Not energized	-	1 = 1	n	y	Parameter
14.17	**DI2 ON delay**						
	Activation delay for digital input/output DIO2. (Visible when 14.01 Module 1 type = FIO-01 or FIO-11) Defines the activation delay for DIO2. See 14.12 DIO1 ON delay.						
	0.00 … 3000.00	0.00	s	10 = 1 s	n	y	Parameter
14.17	**DIO2 ON delay**						
	Activation delay for digital input/output DIO2. (Visible when 14.01 Module 1 type = FIO-01 or FIO-11) Defines the activation delay for DIO2. See 14.12 DIO1 ON delay.						
	0.00 … 3000.00	0.00	s	10 = 1 s	n	y	Parameter
14.18	**DI2 OFF delay**						
	Deactivation delay for digital input DI2. (Visible when 14.01 Module 1 type = FDIO-01) Defines the deactivation delay for DI2. See 14.12 DI1 ON delay.						
	0.00 … 3000.00	0.00	s	10 = 1 s	n	y	Parameter

Index	Name						
	Text						
	Range	**Default**	**Unit**	**Scale FbEq16**	**Volatile**	**Change running**	**Type**
14.18	**DIO2 OFF delay**						
	Deactivation delay for digital input/output DIO2. (Visible when 14.01 Module 1 type = FIO-01 or FIO-11) Defines the deactivation delay for DIO2. See 14.12 DIO1 ON delay.						
	0.00 … 3000.00	0.00	s	10 = 1 s	n	y	Parameter
14.19	**DIO3 function**						
	Function of digital input/output DIO3. (Visible when 14.01 Module 1 type = FIO-01) Selects whether DIO3 of the extension module is used as a digital input or output. 0: **Output**; DIO3 is used as a digital output. 1: **Input**; DIO3 is used as a digital input.						
	0 … 1	Input	-	1 = 1	n	y	Parameter
14.19	**AI supervision function**						
	Supervision function analog inputs. (Visible when 14.01 Module 1 type = FIO-11 or FAIO-01) Selects how the unit reacts when AI1 … AI2/AI3 signals move out of the minimum and/or maximum limits specified for the input. The inputs and the limits to be observed are selected by parameter 14.20 AI supervision selection. 0: **No action**; no action taken. 1: **Fault**; the event generates fault 80A0 AI supervision. 2: **Warning**; the event generates warning A8A0 AI supervision.						
	0 … 2	No action	-	1 = 1	n	y	Parameter
14.20	**AI supervision selection**						
	Activation of analog input supervision. (Visible when 14.01 Module 1 type = FIO-11 or FAIO-01) Specifies which limits of AI1 … AI2/AI3 are supervised by 14.19 AI supervision function. Bit assignment:						

Bit	Name	Value	Remarks
0	AI1 < MIN	1	Minimum limit supervision of AI1 active. See 14.33 AI1 min.
1	AI1 > MAX	1	Maximum limit supervision of AI1 active. See 14.34 AI1 max.
2	AI2 < MIN	1	Minimum limit supervision of AI2 active. See 14.48 AI2 min.
3	AI2 > MAX	1	Maximum limit supervision of AI2 active. See 14.49 AI2 max.
4	AI3 < MIN	1	Minimum limit supervision of AI3 active. See 14.63 AI3 min.
5	AI3 > MAX	1	Maximum limit supervision of AI3 active. See 14.64 AI3 max.
6 … 15	reserved		

	0000h … FFFFh	0000h	-	1 = 1	n	y	Parameter
14.21	**DIO3 output source**						
	Source for digital input/output DIO3. (Visible when 14.01 Module 1 type = FIO-01) Selects a signal/parameter bit to be connected to DIO3 when 14.19 DIO3 function = Output. See 14.11 DIO1 output source.						
	0 … 44	Not energized	-	1 = 1	n	y	Parameter
14.21	**AI tune**						
	Tuning of minimum and maximum analog input values. (Visible when 14.01 Module 1 type = FIO-11 or FAIO-01) Triggers the analog input tuning function, which uses the actual measurement of minimum and maximum input values instead of potentially inaccurate estimated values.						

Index	Name						
	Text						
	Range	**Default**	**Unit**	**Scale FbEq16**	**Volatile**	**Change running**	**Type**
	Apply the minimum or maximum signal to the analog input and select the appropriate tuning function. See drawing at 14.33 AI1 min. 0: **No action**; tuning action completed, or no action has been requested. The parameter automatically reverts to this value after any tuning action. 1: **AI1 min tune**; the measured value at AI1 is written as minimum value of AI1 into 14.33 AI1 min. 2: **AI1 max tune**; the measured value at AI1 is written as maximum value of AI1 into 14.34 AI1 max. 3: **AI2 min tune**; the measured value at AI2 is written as minimum value of AI2 into 14.48 AI2 min. 4: **AI2 max tune**; the measured value at AI2 is written as maximum value of AI2 into 14.49 AI2 max. 5: **AI3 min tune**; the measured value at AI3 is written as minimum value of AI3 into 14.63 AI3 min. (Visible when 14.01 Module 1 type = FIO-11) 6: **AI3 max tune**; the measured value at AI3 is written as maximum value of AI3 into 14.64 AI3 max. (Visible when 14.01 Module 1 type = FIO-11)						
	0 … 6	No action	-	1 = 1	y	y	Parameter
14.22	**DI3 ON delay**						
	Activation delay for digital input DI3. (Visible when 14.01 Module 1 type = FDIO-01) Defines the activation delay for DI3. See 14.12 DI1 ON delay.						
	0.00 … 3000.00	0.00	s	10 = 1 s	n	y	Parameter
14.22	**DIO3 ON delay**						
	Activation delay for digital input/output DIO3. (Visible when 14.01 Module 1 type = FIO-01) Defines the activation delay for DIO3. See 14.12 DIO1 ON delay.						
	0.00 … 3000.00	0.00	s	10 = 1 s	n	y	Parameter
14.22	**AI force selection**						
	Forced values selector for analog inputs. (Visible when 14.01 Module 1 type = FIO-11 or FAIO-01) The true readings of AI1 … AI2/AI3 can be overridden for e.g., testing purposes. A forced value parameter (see table below) is provided for each analog input and its value is applied whenever the corresponding bit in 14.22 AI force selection is 1. Bit assignment:						
	0000h … FFFFh	0000h	-	1 = 1	y	y	Parameter
14.23	**DI3 OFF delay**						
	Deactivation delay for digital input DI3. (Visible when 14.01 Module 1 type = FDIO-01) Defines the deactivation delay for DI3. See 14.12 DI1 ON delay.						
	0.00 … 3000.00	0.00	s	10 = 1 s	n	y	Parameter
14.23	**DIO3 OFF delay**						
	Deactivation delay for DIO3. (Visible when 14.01 Module 1 type = FIO-01)						

Bit	Name	Value	Remarks
0	AI1	1	Force mode: Force AI1 to value of 14.28 AI1 force data.
1	AI2	1	Force mode: Force AI2 to value of 14.43 AI2 force data.
2	AI3	1	Force mode: Force AI3 to value of 14.58 AI3 force data (FIO-11 only).
3 … 15	reserved		

Index	Name						
	Text						
	Range	**Default**	**Unit**	**Scale FbEq16**	**Volatile**	**Change running**	**Type**
	Defines the deactivation delay for DIO3. See 14.12 DIO1 ON delay.						
	0.00 … 3000.00	0.00	s	10 = 1 s	n	y	Parameter
14.24	**DIO4 function**						
	Function of digital input/output DIO4. (Visible when 14.01 Module 1 type = FIO-01) Selects whether DIO4 of the extension module is used as a digital input or output. 0: **Output**; DIO4 is used as a digital output. 1: **Input**; DIO4 is used as a digital input.						
	0 … 1	Input	-	1 = 1	n	y	Parameter
14.26	**DIO4 output source**						
	Source for digital input/output DIO4. (Visible when 14.01 Module 1 type = FIO-01) Selects a signal/parameter bit to be connected to DIO4 when 14.24 DIO4 function = Output. See 14.11 DIO1 output source.						
	0 … 44	Not energized	-	1 = 1	n	y	Parameter
14.26	**AI1 actual value**						
	Value of analog input AI1. (Visible when 14.01 Module 1 type = FIO-11 or FAIO-01) Displays the value of AI1 in mA or V, depending on whether the input is set to current or voltage.						
	-22.000 … 22.000 or -11.000 … 11.000	-	mA or V	1000 = 1 mA or V	y	n	Signal
14.27	**DIO4 ON delay**						
	Activation delay for digital input/output DIO4. (Visible when 14.01 Module 1 type = FIO-01) Defines the activation delay for DIO4. See 14.12 DIO1 ON delay.						
	0.00 … 3000.00	0.00	s	10 = 1 s	n	y	Parameter
14.27	**AI1 scaled value**						
	Scaled value of analog input AI1. (Visible when 14.01 Module 1 type = FIO-11 or FAIO-01) Displays the value of AI1 after scaling. See 14.35 AI1 scaled at AI1 min and 14.36 AI1 scaled at AI1 max.						
	-32768.000 … 32767.000	-	-	1 = 1	y	n	Signal
14.28	**DIO4 OFF delay**						
	Deactivation delay for digital input/output DIO4. (Visible when 14.01 Module 1 type = FIO-01) Defines the deactivation delay for DIO4. See 14.12 DIO1 ON delay.						
	0.00 … 3000.00	0.00	s	01 = 1 s	n	y	Parameter
14.28	**AI1 force data**						
	Forced value of analog input AI1. (Visible when 14.01 Module 1 type = FIO-11 or FAIO-01) Forced value that can be used instead of the true reading of the input. See 14.22 AI force selection.						
	-22.000 … 22.000 or -11.000 … 11.000	0.000	mA or V	1000 = 1 mA or V	y	y	Parameter
14.29	**AI1 HW switch position**						
	Unit selection switch of analog input AI1. (Visible when 14.01 Module 1 type = FIO-11 or FAIO-01)						

Index	Name						
	Text						
	Range	**Default**	**Unit**	**Scale FbEq16**	**Volatile**	**Change running**	**Type**
	Displays the position of the hardware current/voltage selector on the I/O extension module. The setting of the current/voltage selector must match the unit selection made in 14.30 AI1 unit selection. 2: V; volts. 10: mA; milliamps.						
	2 … 10	-	-	1 = 1	y	n	Signal
14.30	**AI1 unit selection**						
	Unit selection of analog input AI1. (Visible when 14.01 Module 1 type = FIO-11 or FAIO-01) Selects the unit for readings and settings related to AI1. Set to either mA or V corresponding to the setting of the I/O extension module (see manual of the I/O extension module). The hardware setting is also shown in 14.29 AI1 HW switch position. 2: **V**; volts. 10: **mA**; milli amperes.						
	2 … 10	mA	-	1 = 1	n	y	Parameter
14.31	**RO status**						
	Status of relay outputs. (Visible when 14.01 Module 1 type = FIO-01) Status of RO1 … RO2 on the I/O extension module. **Example**: 0000000000000001b = RO1 is energized, RO2 is de-energized. Bit assignment:						

Bit	Name	Value	Remarks
0	RO1	1	Energized.
1	RO2	1	Energized.
2 … 15	reserved		

	0000h … FFFFh	-	-	1 = 1	y	n	Signal
14.31	**AI1 filter gain**						
	Hardware filter time constant of analog input AI1. (Visible when 14.01 Module 1 type = FIO-11 or FAIO-01) Selects a hardware filter time for AI1. See also 14.32 AI1 filter time. 0: **No filtering**; no filtering. 1: **125 µs**; 125 microseconds. 2: **250 µs**; 250 microseconds. 3: **500 µs**; 500 microseconds. 4: **1 ms**; 1 millisecond. 5: **2 ms**; 2 milliseconds. 6: **4 ms**; 4 milliseconds. 7: **7.9375 ms**; 7.9375 milliseconds.						
	0 … 7	1 ms	-	1 = 1	n	y	Parameter
14.32	**AI1 filter time**						
	Filter time constant of analog input AI1. (Visible when 14.01 Module 1 type = FIO-11 or FAIO-01) Defines the filter time constant for AI1.						

Index	Name						
	Text						
	Range	Default	Unit	Scale FbEq16	Volatile	Change running	Type
	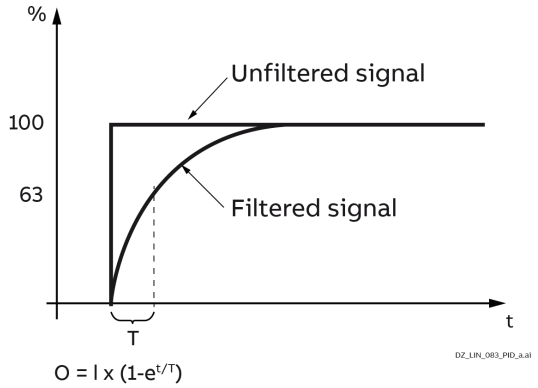 $O = I \times (1-e^{t/T})$ I = filter input (step) O = filter output t = time T = filter time constant The signal is also filtered due to the analog input hardware. See 14.31 AI1 filter gain.						
	0.000 … 30.000	0.100	s	1000 = 1 s	n	y	Parameter
14.33	**AI1 min**						
	Minimum value of analog input AI1. (Visible when 14.01 Module 1 type = FIO-11 or FAIO-01) Defines the minimum value for analog input AI1 in mA or V. Parameters 14.33 and 14.34 set the low and high limit of the analog input signal in mA or V. Scaling parameters 14.35 and 14.36 define the internal values that correspond to these limits as follows: 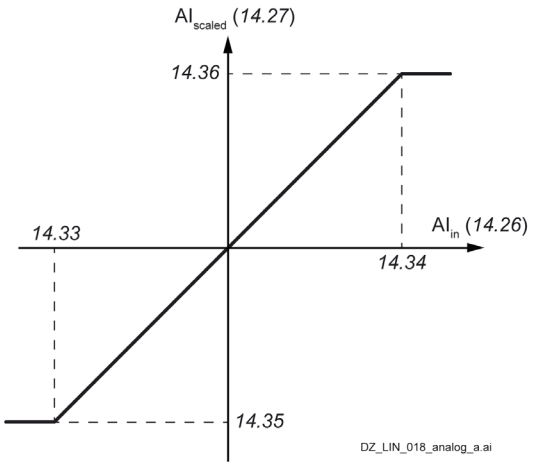						
	-22.000 … 22.000 or -11.000 … 11.000	-20.000 or -10.000	mA or V	1000 = 1 mA or V	n	y	Parameter
14.34	**RO1 source**						
	Source for relay output RO1. (Visible when 14.01 Module 1 type = FIO-01) Selects a signal/parameter bit to be connected to RO1. See 14.11 DIO1 output source.						
	0 … 44	Not energized	-	1 = 1	n	y	Parameter
14.34	**AI1 max**						
	Maximum value of analog input AI1. (Visible when 14.01 Module 1 type = FIO-11 or FAIO-01) Defines the maximum value for AI1 in mA or V. See 14.21 AI tune.						

Index	Name						
	Text						
	Range	**Default**	**Unit**	**Scale FbEq16**	**Volatile**	**Change running**	**Type**
	See 14.33 AI1 min.						
	-22.000 … 22.000 or -11.000 … 11.000	20.000 or 10.000	mA or V	1000 = 1 mA or V	n	y	Parameter
14.35	**RO1 ON delay**						
	Activation delay for relay output RO1. (Visible when 14.01 Module 1 type = FIO-01) Defines the activation delay for RO1. 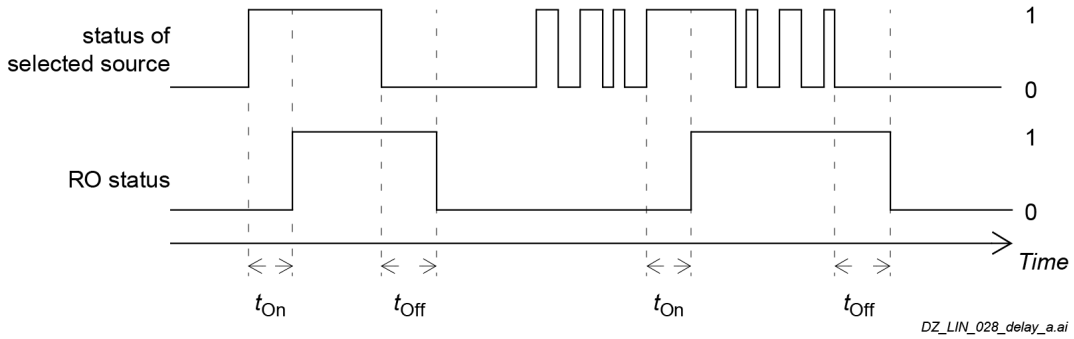 t_{On} = 14.35 RO1 ON delay t_{Off} = 14.36 RO1 OFF delay						
	0.00 … 3000.00	0.00	s	10 = 1 s	n	y	Parameter
14.35	**AI1 scaled at AI1 min**						
	Internal value corresponding to minimum analog input AI1 value. (Visible when 14.01 Module 1 type = FIO-11 or FAIO-01) Defines the internal value that corresponds to the minimum AI1 value defined by 14.33 AI1 min. See 14.33 AI1 min.						
	-32768.000 … 32767.000	-100.000	-	1 = 1	n	y	Parameter
14.36	**RO1 OFF delay**						
	Deactivation delay for relay output RO1. (Visible when 14.01 Module 1 type = FIO-01) Defines the deactivation delay for RO1. See 14.35 RO1 ON delay.						
	0.00 … 3000.00	0.00	s	10 = 1 s	n	y	Parameter
14.36	**AI1 scaled at AI1 max**						
	Internal value corresponding to maximum analog input AI1 value. (Visible when 14.01 Module 1 type = FIO-11 or FAIO-01) Defines the internal value that corresponds to the maximum AI1 value defined by 14.34 AI1 max. See 14.33 AI1 min.						
	-32768.000 … 32767.000	100.000	-	1 = 1	n	y	Parameter
14.37	**RO2 source**						
	Source for relay output RO2. (Visible when 14.01 Module 1 type = FIO-01) Selects a signal/parameter bit to be connected to RO2. See 14.11 DIO1 output source.						
	0 … 44	Not energized	-	1 = 1	n	y	Parameter
14.38	**RO2 ON delay**						
	Activation delay for relay output RO2. (Visible when 14.01 Module 1 type = FIO-01) Defines the activation delay for RO2. See 14.35 RO1 ON delay.						

Index	Name						
	Text						
	Range	**Default**	**Unit**	**Scale FbEq16**	**Volatile**	**Change running**	**Type**
	0.00 … 3000.00	0.00	s	10 = 1 s	n	y	Parameter
14.39	**RO2 OFF delay**						
	Deactivation delay for relay output RO2. (Visible when 14.01 Module 1 type = FIO-01) Defines the deactivation delay for RO2. See 14.35 RO1 ON delay.						
	0.00 … 3000.00	0.00	s	10 = 1 s	n	y	Parameter
14.41	**AI2 actual value**						
	Value of analog input AI2. (Visible when 14.01 Module 1 type = FIO-11 or FAIO-01) Displays the value of AI2 in mA or V, depending on whether the input is set to current or voltage.						
	-22.000 … 22.000 or -11.000 … 11.000	-	mA or V	1000 = 1 mA or V	y	n	Signal
14.42	**AI2 scaled value**						
	Scaled value of analog input AI2. (Visible when 14.01 Module 1 type = FIO-11 or FAIO-01) Displays the value of AI2 after scaling. See 14.50 AI2 scaled at AI2 min and 14.51 AI2 scaled at AI2 max.						
	-32768.000 … 32767.000	-	-	1 = 1	y	n	Signal
14.43	**AI2 force data**						
	Forced value of analog input AI2. (Visible when 14.01 Module 1 type = FIO-11 or FAIO-01) Forced value that can be used instead of the true reading of the input. See 14.22 AI force selection.						
	-22.000 … 22.000 or -11.000 … 11.000	0.000	mA or V	1000 = 1 mA or V	y	y	Parameter
14.44	**AI2 HW switch position**						
	Unit selection switch of analog input AI2. (Visible when 14.01 Module 1 type = FIO-11 or FAIO-01) Displays the position of the hardware current/voltage selector on the I/O extension module. The setting of the current/voltage selector must match the unit selection made in 14.45 AI2 unit selection. 2: V; volts. 10: mA; milliamps.						
	2 … 10	-	-	1 = 1	y	n	Signal
14.45	**AI2 unit selection**						
	Unit selection of analog input AI2. (Visible when 14.01 Module 1 type = FIO-11 or FAIO-01) Selects the unit for readings and settings related to AI2. Set to either mA or V corresponding to the setting of the I/O extension module (see the manual of the I/O extension module). The hardware setting is also shown in 14.44 AI2 HW switch position. 2: **V**; volts. 10: **mA**; milli amperes.						
	2 … 10	mA	-	1 = 1	n	y	Parameter
14.46	**AI2 filter gain**						
	Hardware filter time constant of analog input AI2. (Visible when 14.01 Module 1 type = FIO-11 or FAIO-01) Selects a hardware filter time for AI2. See also 14.47 AI2 filter time. 0: **No filtering**; no filtering. 1: **125 µs**; 125 microseconds.						

Index	Name						
	Text						
	Range	**Default**	**Unit**	**Scale FbEq16**	**Volatile**	**Change running**	**Type**
	2: **250 µs**; 250 microseconds. 3: **500 µs**; 500 microseconds. 4: **1 ms**; 1 millisecond. 5: **2 ms**; 2 milliseconds. 6: **4 ms**; 4 milliseconds. 7: **7.9375 ms**; 7.9375 milliseconds.						
	0 … 7	1 ms	-	1 = 1	n	y	Parameter
14.47	**AI2 filter time**						
	Filter time constant of analog input AI2. (Visible when 14.01 Module 1 type = FIO-11 or FAIO-01) Defines the filter time constant for AI2. 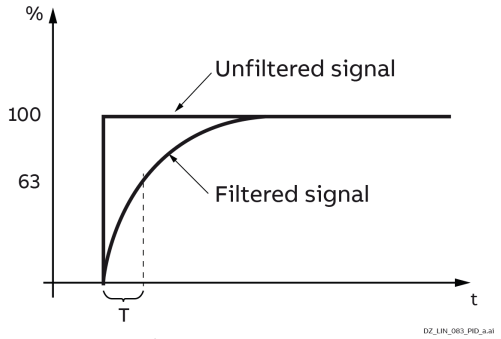 $O = I \times (1-e^{t/T})$ I = filter input (step) O = filter output t = time T = filter time constant The signal is also filtered due to the analog input hardware. See 14.46 AI2 filter gain.						
	0.000 … 30.000	0.100	s	1000 = 1 s	n	y	Parameter
14.48	**AI2 min**						
	Minimum value of analog input AI2. (Visible when 14.01 Module 1 type = FIO-11 or FAIO-01) Defines the minimum value for AI2 in mA or V. See 14.21 AI tune. Parameters 14.48 and 14.49 set the low and high limit of the analog input signal in mA or V. Scaling parameters 14.50 and 14.51 define the internal values that correspond to these limits as follows: 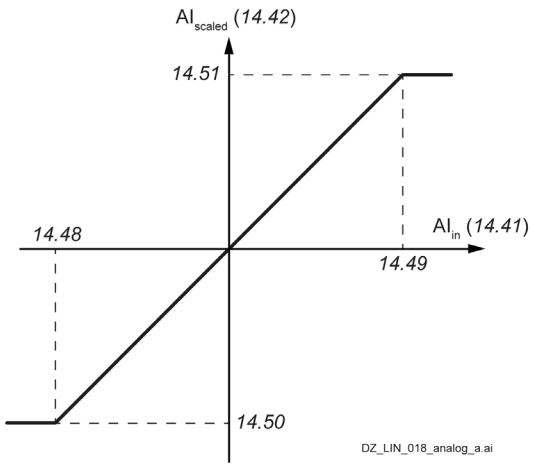 						
	-22.000 … 22.000 or -11.000 … 11.000	-20.000 or -10.000	mA or V	1000 = 1 mA or V	n	y	Parameter

Index	Name						
	Text						
	Range	Default	Unit	Scale FbEq16	Volatile	Change running	Type
14.49	**AI2 max**						
	Maximum value of analog input AI2. (Visible when 14.01 Module 1 type = FIO-11 or FAIO-01) Defines the maximum value for AI2 in mA or V. See 14.48 AI2 min.						
	-22.000 … 22.000 or -11.000 … 11.000	20.000 or 10.000	mA or V	1000 = 1 mA or V	n	y	Parameter
14.50	**AI2 scaled at AI2 min**						
	Internal value corresponding to minimum analog input AI2 value. (Visible when 14.01 Module 1 type = FIO-11 or FAIO-01) Defines the internal value that corresponds to the minimum AI2 value defined by 14.48 AI2 min. See 14.48 AI2 min.						
	-32768.000 … 32767.000	-100.000	-	1 = 1	n	y	Parameter
14.51	**AI2 scaled at AI2 max**						
	Internal value corresponding to maximum analog input AI2 value. (Visible when 14.01 Module 1 type = FIO-11 or FAIO-01) Defines the internal value that corresponds to the maximum AI2 value defined by 14.49 AI2 max. See 14.48 AI2 min.						
	-32768.000 … 32767.000	100.000	-	1 = 1	n	y	Parameter
14.56	**AI3 actual value**						
	Value of analog input AI3. (Visible when 14.01 Module 1 type = FIO-11) Displays the value of AI3 in mA or V, depending on whether the input is set to current or voltage.						
	-22.000 … 22.000 or -11.000 … 11.000	-	mA or V	1000 = 1 mA or V	y	n	Signal
14.57	**AI3 scaled value**						
	Scaled value of analog input AI3. (Visible when 14.01 Module 1 type = FIO-11) Displays the value of AI3 after scaling. See 14.65 AI3 scaled at AI3 min and 14.66 AI3 scaled at AI3 max.						
	-32768.000 … 32767.000	-	-	1 = 1	y	n	Signal
14.58	**AI3 force data**						
	Forced value of analog input AI3. (Visible when 14.01 Module 1 type = FIO-11) Forced value that can be used instead of the true reading of the input. See 14.22 AI force selection.						
	-22.000 … 22.000 or -11.000 … 11.000	0.000	mA or V	1000 = 1 mA or V	y	y	Parameter
14.59	**AI3 HW switch position**						
	Unit selection switch of analog input AI3. (Visible when 14.01 Module 1 type = FIO-11) Displays the position of the hardware current/voltage selector on the I/O extension module. The setting of the current/voltage selector must match the unit selection made in 14.60 AI3 unit selection. 2: V; volts. 10: mA; milliamps.						
	2 … 10	-	-	1 = 1	y	n	Signal
14.60	**AI3 unit selection**						
	Unit selection of analog input AI3. (Visible when 14.01 Module 1 type = FIO-11)						

Index	Name						
	Text						
	Range	**Default**	**Unit**	**Scale FbEq16**	**Volatile**	**Change running**	**Type**
	Selects the unit for readings and settings related to AI3. Set to either mA or V corresponding to the setting of the I/O extension module (see manual of the I/O extension module). The hardware setting is also shown in 14.59 AI3 HW switch position. 2: **V**; volts. 10: **mA**; milli amperes.						
	2 … 10	mA	-	1 = 1 mA or V	n	y	Parameter
14.61	**AI3 filter gain**						
	Hardware filter time constant of analog input AI3. (Visible when 14.01 Module 1 type = FIO-11) Selects a hardware filter time for AI3. See also 14.62 AI3 filter time. 0: **No filtering**; no filtering. 1: **125 µs**; 125 microseconds. 2: **250 µs**; 250 microseconds. 3: **500 µs**; 500 microseconds. 4: **1 ms**; 1 millisecond. 5: **2 ms**; 2 milliseconds. 6: **4 ms**; 4 milliseconds. 7: **7.9375 ms**; 7.9375 milliseconds.						
	0 … 7	1 ms	-	1 = 1	n	y	Parameter
14.62	**AI3 filter time**						
	Filter time constant of analog input AI3. (Visible when 14.01 Module 1 type = FIO-11) Defines the filter time constant for AI3. 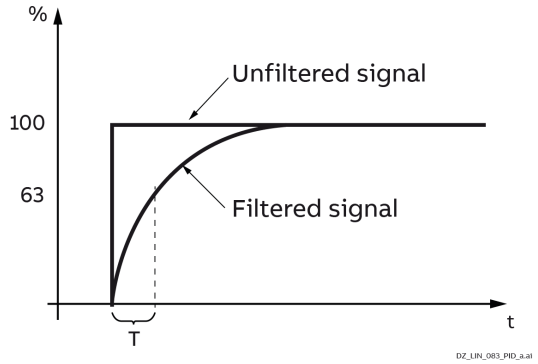 $O = I \times (1-e^{t/T})$ I = filter input (step) O = filter output t = time T = filter time constant The signal is also filtered due to the analog input hardware. See 14.61 AI3 filter gain.						
	0.000 … 30.000	0.100	s	1000 = 1 s	n	y	Parameter
14.63	**AI3 min**						
	Minimum value of analog input AI3. (Visible when 14.01 Module 1 type = FIO-11) Defines the minimum value for AI3 mA or V. See 14.21 AI tune. Parameters 14.63 and 14.64 set the low and high limit of the analog input signal in mA or V. Scaling parameters 14.65 and 14.66 define the internal values that correspond to these limits as follows:						

Index	Name						
	Text						
	Range	Default	Unit	Scale FbEq16	Volatile	Change running	Type
	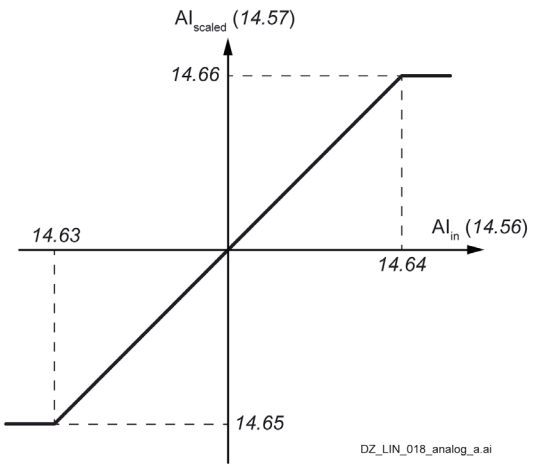						
	-22.000 … 22.000 or -11.000 … 11.000	-20.000 or -10.000	mA or V	1000 = 1 mA or V	n	y	Parameter
14.64	**AI3 max**						
	Maximum value of analog input AI3. (Visible when 14.01 Module 1 type = FIO-11) Defines the maximum value for AI3 in mA or V. See 14.21 AI tune. See 14.63 AI3 min.						
	-22.000 … 22.000 or -11.000 … 11.000	20.000 or 10.000	mA or V	1000 = 1 mA or V	n	y	Parameter
14.65	**AI3 scaled at AI3 min**						
	Internal value corresponding to minimum analog input AI3 value. (Visible when 14.01 Module 1 type = FIO-11) Defines the internal value that corresponds to the minimum AI3 value defined by 14.63 AI3 min. See 14.63 AI3 min.						
	-32768.000 … 32767.000	-100.000	-	1 = 1	n	y	Parameter
14.66	**AI3 scaled at AI3 max**						
	Internal value corresponding to maximum analog input AI3 value. (Visible when 14.01 Module 1 type = FIO-11) Defines the internal value that corresponds to the maximum AI3 value defined by 14.64 AI3 max. See 14.63 AI3 min.						
	-32768.000 … 32767.000	100.000	-	1 = 1	n	y	Parameter
14.71	**AO force selection**						
	Forced values selector for analog outputs. (Visible when 14.01 Module 1 type = FIO-11 or FAIO-01) The value of AO1 … AO1/AO2 can be overridden for e.g., testing purposes. A forced value parameter (see table below) is provided for each analog output and its value is applied whenever the corresponding bit in 14.71 AO fore selection is 1. Bit assignment:						
	0000h … FFFFh	0000h	-	1 = 1	y	y	Parameter

Bit	Name	Value	Remarks
0	AO1	1	Force mode: Force AO1 to value of 14.78 AO1 force data.
1	AO2	1	Force mode: Force AO2 to value of 14.88 AO2 force data (FAIO-01 only).
2 … 15	reserved		

Index	Name						
	Text						
	Range	**Default**	**Unit**	**Scale FbEq16**	**Volatile**	**Change running**	**Type**
14.76	**AO1 actual value**						
	Value of analog output AO1. (Visible when 14.01 Module 1 type = FIO-11 or FAIO-01) Displays the value of AO1 in mA.						
	0.000 … 22.000	-	mA	1000 = 1 mA	y	n	Signal
14.77	**AO1 source**						
	Source for analog output AO1. (Visible when 14.01 Module 1 type = FIO-11 or FAIO-01) Selects a signal/parameter to be connected to AO1. **Other**; source selection. 0: **Zero**; none. 37: **AO1 data storage**; see 13.91 AO1 data storage. 38: **AO2 data storage**; see 13.92 AO2 data storage.						
	0 … 38	Zero	-	1 = 1	n	y	Parameter
14.78	**AO1 force data**						
	Forced value of analog output AO1. (Visible when 14.01 Module 1 type = FIO-11 or FAIO-01) Forced value that can be used instead of the selected output signal. See 14.71 AO force selection.						
	0.000 … 22.000	0.000	mA	1000 = 1 mA	y	y	Parameter
14.79	**AO1 filter time**						
	Filter time constant of analog output AO1. (Visible when 14.01 Module 1 type = FIO-11 or FAIO-01) Defines the filter time constant for AO1. 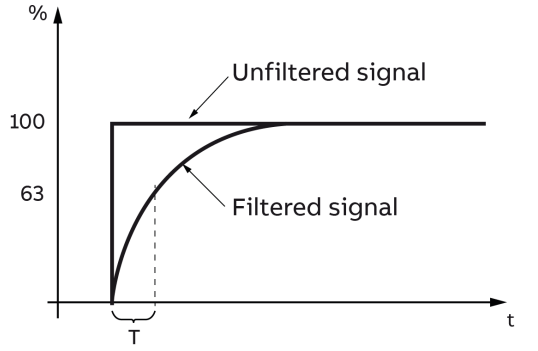 $O = I \times (1-e^{t/T})$ I = filter input (step) O = filter output t = time T = filter time constant						
	0.000 … 30.000	0.100	s	1000 = 1 s	n	y	Parameter
14.80	**AO1 source min**						
	Internal value corresponding to minimum analog output AO1 value. (Visible when 14.01 Module 1 type = FIO-11 or FAIO-01) Defines the internal value that corresponds to the minimum required AO1 value. Scaling parameters 14.80 and 14.81 set the low and high internal limits that corresponds to the analog output values in mA defined by parameters 14.82 and 14.83:						

Index	Name						
	Text						
	Range	Default	Unit	Scale FbEq16	Volatile	Change running	Type
	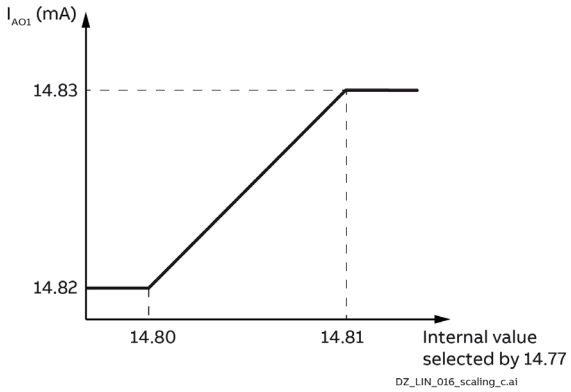 Setting parameter 14.82 as maximum value and 14.83 as minimum value inverts the output: 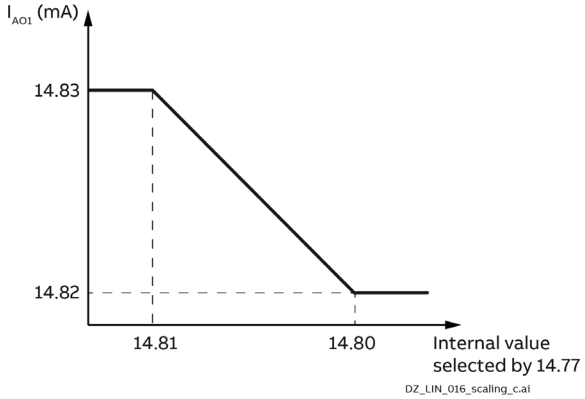						
	-32768.0 … 32767.0	0.0	-	1 = 1	n	y	Parameter
14.81	**AO1 source max**						
	Internal value corresponding to maximum analog output AO1 value. (Visible when 14.01 Module 1 type = FIO-11 or FAIO-01) Defines the internal value that corresponds to the maximum required AO1 value. See 14.80 AO1 source min.						
	-32768.0 … 32767.0	100.0	-	1 = 1	n	y	Parameter
14.82	**AO1 out at AO1 src min**						
	Minimum analog output AO1 value. (Visible when 14.01 Module 1 type = FIO-11 or FAIO-01) Defines the minimum output value for AO1 in mA. See 14.80 AO1 source min.						
	0.000 … 22.000	0.000	mA	1000 = 1 mA	n	y	Parameter
14.83	**AO1 out at AO1 src max**						
	Maximum analog output AO1 value. (Visible when 14.01 Module 1 type = FIO-11 or FAIO-01) Defines the maximum output value for AO1 in mA. See 14.80 AO1 source min.						
	0.000 … 22.000	20.000	mA	1000 = 1 mA	n	y	Parameter
14.86	**AO2 actual**						
	Value of analog output AO2. (Visible when 14.01 Module 1 type = FAIO-01) Displays the value of AO2 in mA.						
	0.000 … 22.000	-	mA	1000 = 1 mA	y	n	Signal

Index	Name						
	Text						
	Range	Default	Unit	Scale FbEq16	Volatile	Change running	Type
14.87	**AO2 source**						
	Source for analog output AO2. (Visible when 14.01 Module 1 type = FAIO-01) Selects a signal/parameter to be connected to AO2. See 14.77 AO1 source.						
	0 … 38	Zero	-	1 = 1	n	y	Parameter
14.88	**AO2 force data**						
	Forced value of analog output AO2. (Visible when 14.01 Module 1 type = FAIO-01) Forced value that can be used instead of the selected output signal. See 14.71 AO force selection.						
	0.000 … 22.000	0.000	mA	1000 = 1 mA	y	y	Parameter
14.89	**AO2 filter time**						
	Filter time constant of analog output AO2. (Visible when 14.01 Module 1 type = FAIO-01) Defines the filter time constant for AO2. 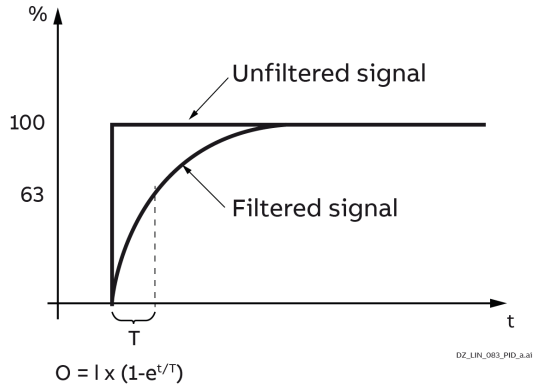 $O = I \times (1-e^{t/T})$ I = filter input (step) O = filter output t = time T = filter time constant						
	0.000 … 30.000	0.100	s	1000 = 1 s	n	y	Parameter
14.90	**AO2 source min**						
	Internal signal value corresponding to minimum analog output AO2 value. (Visible when 14.01 Module 1 type = FAIO-01) Defines the internal value that corresponds to the minimum required AO2 value. Scaling parameters 14.90 and 14.91 set the low and high internal limits that corresponds to the analog output values in mA defined by parameters 14.92 and 14.93:						

Index	Name						
	Text						
	Range	Default	Unit	Scale FbEq16	Volatile	Change running	Type
	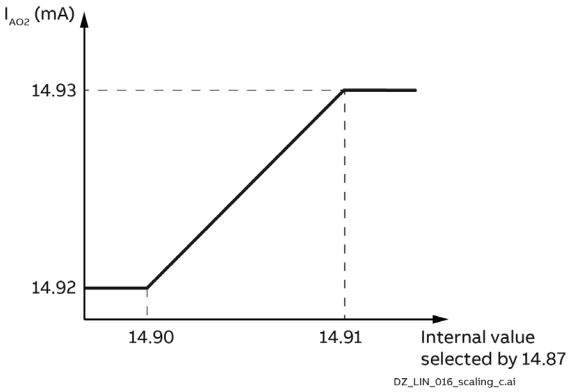 Setting parameter 14.92 as maximum value and 14.93 as minimum value inverts the output: 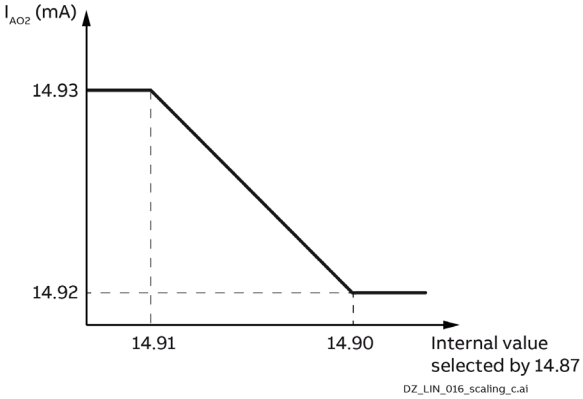						
	-32768.0 … 32767.0	0.0	-	1 = 1	n	y	Parameter
14.91	**AO2 source max**						
	Internal value corresponding to maximum analog output AO2 value. (Visible when 14.01 Module 1 type = FAIO-01) Defines the internal value that corresponds to the maximum required AO2 value. See 14.90 AO2 source min.						
	-32768.0 … 32767.0	100.0	-	1 = 1	n	y	Parameter
14.92	**AO2 out at AO2 src min**						
	Minimum analog output AO2 value. (Visible when 14.01 Module 1 type = FAIO-01) Defines the minimum output value for AO2. See 14.90 AO2 source min.						
	0.000 … 22.000	0.000	mA	1000 = 1 mA	n	y	Parameter
14.93	**AO2 out at AO2 src max**						
	Maximum analog output AO2 value. (Visible when 14.01 Module 1 type = FAIO-01) Defines the maximum output value for AO2. See 14.90 AO2 source min.						
	0.000 … 22.000	20.000	mA	1000 = 1 mA	n	y	Parameter

15 I/O extension module 2

Description see group 14 I/O extension module 1.
Configuration of I/O extension module 2.
The contents of the parameter group vary according to the selected I/O extension module type.

16 I/O extension module 3

Description see group 14 I/O extension module 1.
Configuration of I/O extension module 3.
The contents of the parameter group vary according to the selected I/O extension module type.

19 Start/Stop Mode

Selection of local and external control locations and operating modes.

Index	Name						
	Text						
	Range	Default	Unit	Scale FbEq16	Volatile	Change running	Type

Control locations:

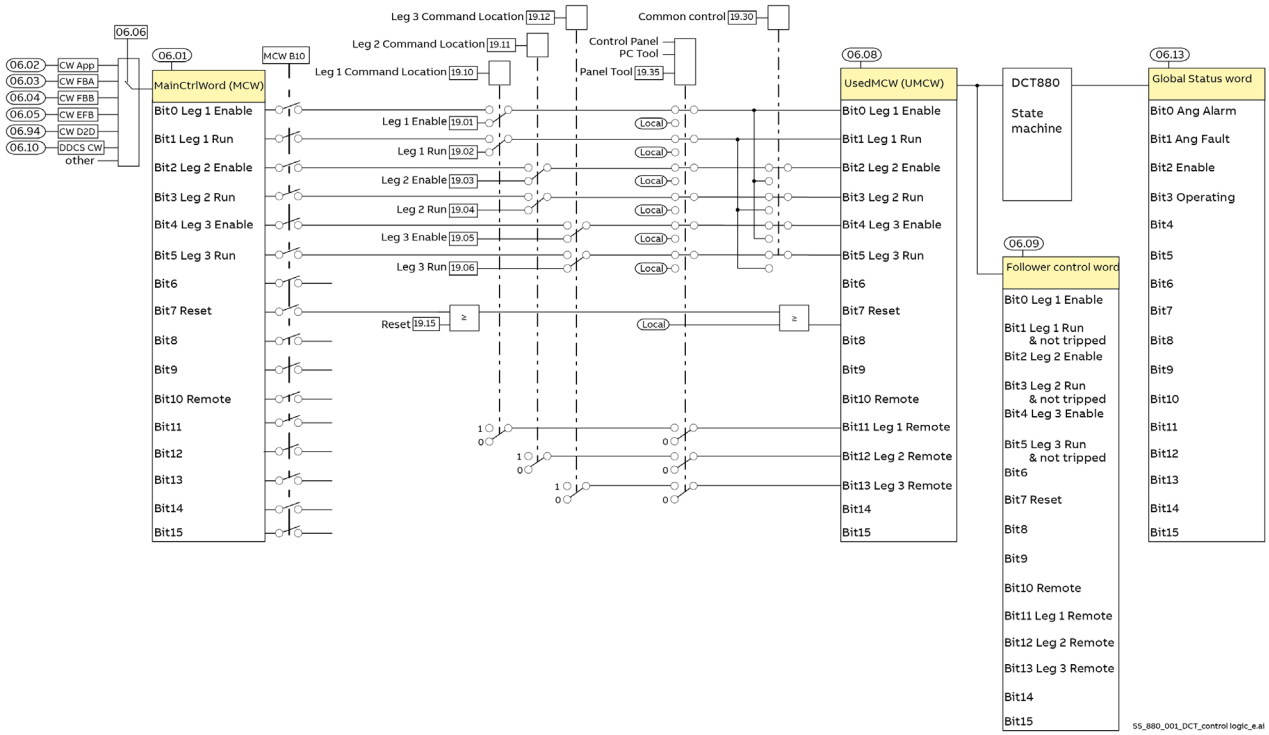

Index	Name						
	Text						
	Range	Default	Unit	Scale FbEq16	Volatile	Change running	Type

Leg 1 state machine:

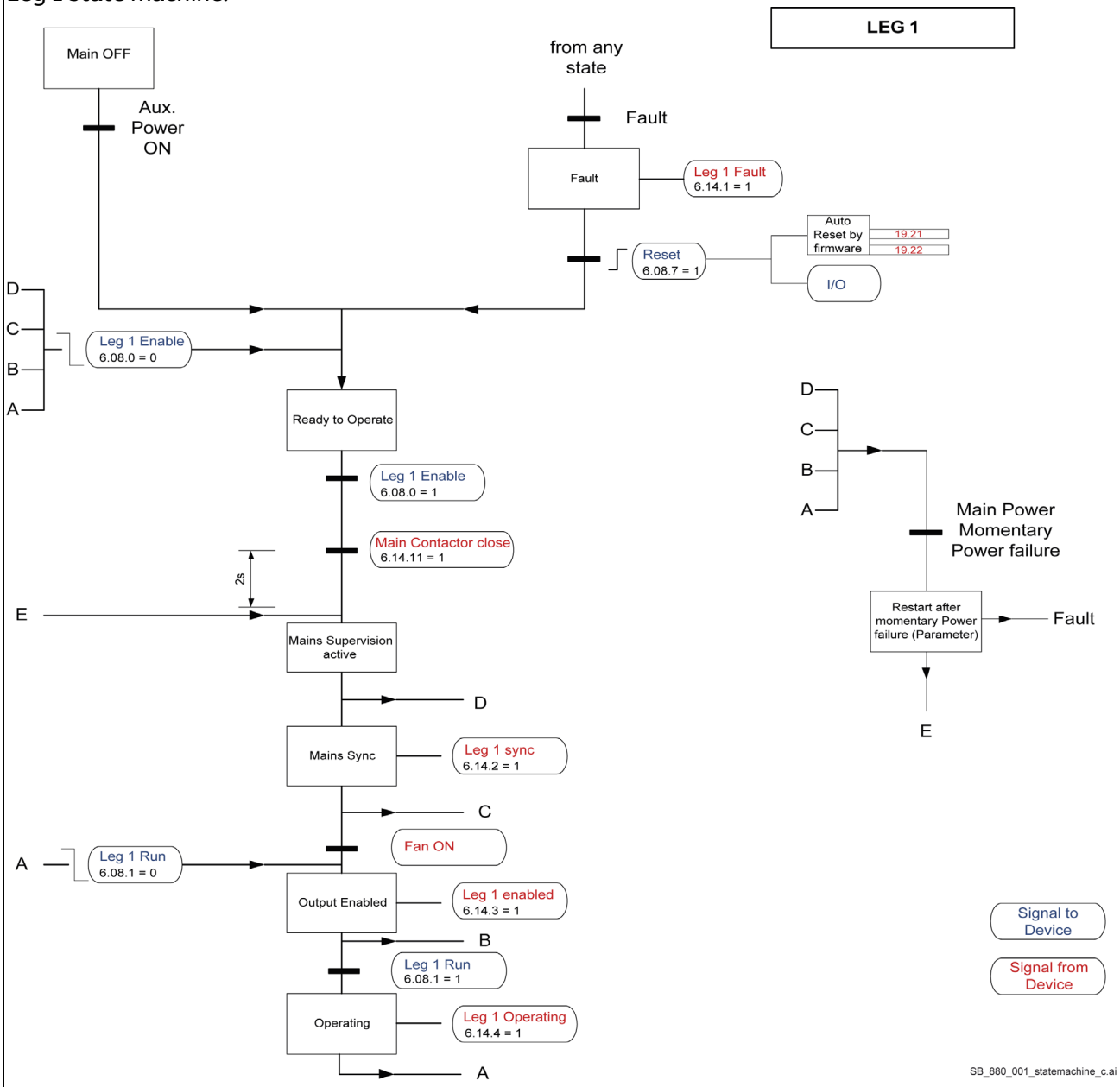

State machines of leg 2 and leg 3 see Appendix.

19.01	Leg 1 Enable Local I/O
	Source for leg 1 Enable command from local I/O. See 19.10 Leg 1 Command Location Selector. **Other [bit]**; source selection. 0: **Open**; 0, disable leg 1. 1: **Close**; 1, enable leg 1. 3: **DI1**; 10.02.b00 DI delayed status. 4: **DI2**; 10.02.b01 DI delayed status. 5: **DI3**; 10.02.b02 DI delayed status. 6: **DI4**; 10.02.b03 DI delayed status. 7: **DI5**; 10.02.b04 DI delayed status. 8: **DI6**; 10.02.b05 DI delayed status. 11: **DIO1**; 11.02.b00 DIO delayed status.

Index	Name						
	Text						
	Range	Default	Unit	Scale FbEq16	Volatile	Change running	Type
	12: **DIO2**; 11.02.b01 DIO delayed status. 19: **DIL**; 10.02.b15 DI delayed status. 21: **Mains ON**; automatically enable the unit when the mains voltage is present.						
	0 … 21	DI1	-	1 = 1	n	y	Parameter
19.02	**Leg 1 Run Local I/O**						
	Source for leg 1 Run command from local I/O. See 19.10 Leg 1 Command Location Selector. **Other [bit]**; source selection. 0: **Open**; 0, stop leg 1. 1: **Close**; 1, run leg 1. 3: **DI1**; 10.02.b00 DI delayed status. 4: **DI2**; 10.02.b01 DI delayed status. 5: **DI3**; 10.02.b02 DI delayed status. 6: **DI4**; 10.02.b03 DI delayed status. 7: **DI5**; 10.02.b04 DI delayed status. 8: **DI6**; 10.02.b05 DI delayed status. 11: **DIO1**; 11.02.b00 DIO delayed status. 12: **DIO2**; 11.02.b01 DIO delayed status. 19: **DIL**; 10.02.b15 DI delayed status. 21: **Auto reference**; see 19.46 Leg 1 Auto reference ON level.						
	0 … 21	DI2	-	1 = 1	n	y	Parameter
19.03	**Leg 2 Enable Local I/O**						
	Source for leg 2 Enable command from local I/O. See 19.11 Leg 2 Command Location Selector. See 19.01 Leg 1 Enable Local I/O.						
	0 … 21	DI1	-	1 = 1	n	y	Parameter
19.04	**Leg 2 Run Local I/O**						
	Source for leg 2 Run command from local I/O. See 19.11 Leg 2 Command Location Selector. See 19.02 Leg 1 Run Local I/O and 19.47 Leg 2 Auto reference ON level.						
	0 … 21	DI2	-	1 = 1	n	y	Parameter
19.05	**Leg 3 Enable Local I/O**						
	Source for leg 3 Enable command from local I/O. See 19.12 Leg 3 Command Location Selector. See 19.01 Leg 1 Enable Local I/O.						
	0 … 21	DI1	-	1 = 1	n	y	Parameter
19.06	**Leg 3 Run Local I/O**						
	Source for leg 3 Run command from local I/O. See 19.12 Leg 3 Command Location Selector. See 19.02 Leg 1 Run Local I/O and 19.48 Leg 3 Auto reference ON level.						
	0 … 21	DI2	-	1 = 1	n	y	Parameter
19.10	**Leg 1 Command Location Selector**						
	Switch to change the source for leg 1 Enable and Run commands from 06.01 Main Control Word active to local I/O. **Other [bit]**; source selection. 0: **MCW (06.01)**; 0, always follow 06.01 Main Control Word active. 1: **Hardware DI**; 1, always follow local I/O, see parameters 19.01 & 19.02, 19.03 & 19.04, 19.05 & 19.06. 3: **DI1**; 0, follow 06.01 Main Control Word active. 1, follow local I/O. 4: **DI2**; 0, follow 06.01 Main Control Word active. 1, follow local I/O. 5: **DI3**; 0, follow 06.01 Main Control Word active. 1, follow local I/O. 6: **DI4**; 0, follow 06.01 Main Control Word active. 1, follow local I/O. 7: **DI5**; 0, follow 06.01 Main Control Word active. 1, follow local I/O. 8: **DI6**; 0, follow 06.01 Main Control Word active. 1, follow local I/O. 11: **DIO1**; 0, follow 06.01 Main Control Word active. 1, follow local I/O.						

Index	Name						
	Text						
	Range	**Default**	**Unit**	**Scale FbEq16**	**Volatile**	**Change running**	**Type**
	12: **DIO2**; 0, follow 06.01 Main Control Word active. 1, follow local I/O. 19: **DIL**; 0, follow 06.01 Main Control Word active. 1, follow local I/O.						
	0 … 19	Hardware DI	-	1 = 1	n	y	Parameter
19.11	**Leg 2 Command Location Selector**						
	Switch to change the source for leg 2 Enable and Run commands from Main Control Word to local I/O. See 19.10 Leg 1 Command Location Selector.						
	0 … 19	Hardware DI	-	1 = 1	n	y	Parameter
19.12	**Leg 3 Command Location Selector**						
	Switch to change the source for leg 3 Enable and Run commands from Main Control Word to local I/O. See 19.10 Leg 1 Command Location Selector.						
	0 … 19	Hardware DI	-	1 = 1	n	y	Parameter
19.15	**Reset**						
	Source for the external fault reset signal. **Other [bit]**; source selection. 0: **Open**; 0, no reset. 1: **Close**; 1, reset. 3: **DI1**; 10.02.b00 DI delayed status. 4: **DI2**; 10.02.b01 DI delayed status. 5: **DI3**; 10.02.b02 DI delayed status. 6: **DI4**; 10.02.b03 DI delayed status. 7: **DI5;** 10.02.b04 DI delayed status. 8: **DI6**; 10.02.b05 DI delayed status. 11: **DIO1**; 11.02.b00 DIO delayed status. 12: **DIO2**; 11.02.b01 DIO delayed status. 19: **DIL**; 10.02.b15 DI delayed status. 21: **Mains ON**; automatically enable the unit when the mains voltage is present.						
	0 … 21	DI3	-	1 = 1	n	y	Parameter
19.17	**Local control**						
	Enable/Disable the local control via control panel and PC tool. Enable/Disable the local control (start and stop buttons of the control panel and the local controls of the PC tool). **WARNING** Before disabling local control, ensure that the control panel is not needed to stop the unit. 0: **Enable**; enable the local control. 1: **Disable**; disable the local control.						
	0 … 1	Enable	-	1 = 1	n	y	Parameter
19.20	**3 Phase Sequence**						
	Only for 3 phase systems. Defines whether the unit starts operation with the next phase zero crossing or at the next zero crossing of phase U. 0: **Start Stop: Any order**; starts with zero crossing of any phase U, V or W. 1: **Start: U Stop: W**; starts with zero crossing of phase U, stops with zero crossing of phase W.						
	0 … 1	Start Stop: Any order	-	1 = 1	n	y	Parameter
19.21	**Auto Reset Retries**						
	Defines the number of attempts the unit tries to reset a fault automatically. In case of setting 0, no auto reset is performed.						
	0 … 10	0	-	1 = 1	n	y	Parameter

Index	Name						
	Text						
	Range	Default	Unit	Scale FbEq16	Volatile	Change running	Type
19.22	**Auto Reset Time**						
	Defines the delay time from occurrence of a fault until the unit tries to reset the fault automatically.						
	0.0 … 10.0	1.0	s	10 = 1 s	n	y	Parameter
19.23	**Auto Reset Leg 1 Events**						

Defines which leg 1 events are affected by auto reset.
Each bit represents one specific event.
Bit assignment:

Bit	Name	Value	Remarks
0	Overcurrent	1	Auto reset leg 1 overcurrent.
1	Mains Overvoltage	1	Auto reset leg 1 mains overvoltage.
2	Thyristor Short Circuit	1	Auto reset leg 1 thyristor(s) short circuit.
3	Thyristor Open Circuit	1	Auto reset leg 1 thyristor(s) open circuit.
4	Mains Undervoltage	1	Auto reset leg 1 mains undervoltage.
5	Unit Thermal Overload	1	Auto reset unit thermal overload.
6 … 15	reserved		

0000h … FFFFh	0000h	-	1 = 1	n	y	Parameter

19.24	**Auto Reset Leg 2 Events**

Defines which leg 2 events are affected by auto reset.
Each bit represents one specific event.
Bit assignment:

Bit	Name	Value	Remarks
0	Overcurrent	1	Auto reset leg 2 overcurrent.
1	Mains Overvoltage	1	Auto reset leg 2 mains overvoltage.
2	Thyristor Short Circuit	1	Auto reset leg 2 thyristor(s) short circuit.
3	Thyristor Open Circuit	1	Auto reset leg 2 thyristor(s) open circuit.
4	Mains Undervoltage	1	Auto reset leg 2 mains undervoltage.
5	Unit Thermal Overload	1	Auto reset unit thermal overload.
6 … 15	reserved		

0000h … FFFFh	0000h	-	1 = 1	n	y	Parameter

19.25	**Auto Reset Leg 3 Events**

Defines which leg 3 events are affected by auto reset.
Each bit represents one specific event.
Bit assignment:

Bit	Name	Value	Remarks
0	Overcurrent	1	Auto reset leg 3 overcurrent.
1	Mains Overvoltage	1	Auto reset leg 3 mains overvoltage.
2	Thyristor Short Circuit	1	Auto reset leg 3 thyristor(s) short circuit.
3	Thyristor Open Circuit	1	Auto reset leg 3 thyristor(s) open circuit.
4	Mains Undervoltage	1	Auto reset leg 3 mains undervoltage.
5	Unit Thermal Overload	1	Auto reset unit thermal overload.
6 … 15	reserved		

0000h … FFFFh	0000h	-	1 = 1	n	y	Parameter

Index	Name						
	Text						
	Range	Default	Unit	Scale FbEq16	Volatile	Change running	Type
19.26	**Auto Reset Leg 1 Load Events**						
	Defines which leg 1 load events are affected by auto reset. Each bit represents one specific event. Bit assignment:						
	0000h … FFFFh	0000h	-	1 = 1	n	y	Parameter
19.27	**Auto Reset Leg 2 Load Events**						
	Defines which leg 2 load events are affected by auto reset. Each bit represents one specific event. Bit assignment:						
	0000h … FFFFh	0000h	-	1 = 1	n	y	Parameter
19.28	**Auto Reset Leg 3 Load Events**						
	Defines which leg 3 load events are affected by auto reset. Each bit represents one specific event. Bit assignment:						
	0000h … FFFFh	0000h	-	1 = 1	n	y	Parameter
19.29	**Auto Reset External Events**						
	Defines which external events are affected by auto reset. Each bit represents one specific event. Bit assignment:						

Bit	Name	Value	Remarks
0	Load Loss	1	Auto reset leg 1 load loss.
1	Partial Load Loss	1	Auto reset leg 1 partial load loss.
2	Partial Load short circuit	1	Auto reset leg 1 partial load short circuit.
3	Load overload	1	Auto reset leg 1 load overload.
4	Load aging	1	Auto reset leg 1 load aging.
5	Load current imbalance	1	Auto reset leg 1 load current imbalance.
6 … 15	reserved		

Bit	Name	Value	Remarks
0	Load Loss	1	Auto reset leg 2 load loss.
1	Partial Load Loss	1	Auto reset leg 2 partial load loss.
2	Partial Load short circuit	1	Auto reset leg 2 partial load short circuit.
3	Load overload	1	Auto reset leg 2 load overload.
4	Load aging	1	Auto reset leg 2 load aging.
5	Load current imbalance	1	Auto reset leg 2 load current imbalance.
6 … 15	reserved		

Bit	Name	Value	Remarks
0	Load Loss	1	Auto reset leg 3 load loss.
1	Partial Load Loss	1	Auto reset leg 3 partial load loss.
2	Partial Load short circuit	1	Auto reset leg 3 partial load short circuit.
3	Load overload	1	Auto reset leg 3 load overload.
4	Load aging	1	Auto reset leg 3 load aging.
5	Load current imbalance	1	Auto reset leg 3 load current imbalance.
6 … 15	reserved		

Index	Name						
	Text						
	Range	Default	Unit	Scale FbEq16	Volatile	Change running	Type

Bit	Name	Value	Remarks
0	External Event 1	1	Auto reset external event 1.
1	External Event 2	1	Auto reset external event 2.
2	External Event 3	1	Auto reset external event 3.
3	External Event 4	1	Auto reset external event 4.
4	External Event 5	1	Auto reset external event 5.
5 … 15	reserved		

0000h … FFFFh	0000h	-	1 = 1	n	y	Parameter

19.30	**Common Control Selector**						
	Selects, whether all legs operate independent or if leg 2 and leg 3 react to leg 1 Enable and Run commands. 0: **Separate**; all legs operate independent. 1: **Follow Leg 1**; leg 2 and leg 3 follow leg 1. Set also: – 99.25 Leg 2 Control Mode = Follow Leg 1. – 99.40 Leg 3 Control Mode = Follow Leg 1.						
	0 … 1	Separate	-	1 = 1	n	y	Parameter
19.35	**Panel/Tool Control Selector**						
	Selects which leg is reacting to the control from control panel/PC tool. 0: **None**; inactive. 1: **Leg 1**; 2: **Leg 2**; 3: **Leg 3**; 4: **All**;						
	0 … 4	All	-	1 = 1	n	y	Parameter
19.37	**Mains contactor acknowledge source**						
	Mains contactor acknowledge source. The event generates fault F524 Mains contactor acknowledge: – Immediately, when the acknowledge signal is selected and the feedback is lost during operation. – After 10 seconds, when the unit is being switched on, the acknowledge is selected and the feedback is missing for longer than 10 seconds. 0 = No acknowledge. 1 = Acknowledge. **Other [bit]**; source selection. 0: **No acknowledge**; 0. 1: **Acknowledge unused**; inactive. Mains contactor acknowledge is disabled. 3: **DI1**; 10.02.b00 DI delayed status. 4: **DI2**; 10.02.b01 DI delayed status. 5: **DI3**; 10.02.b02 DI delayed status. 6: **DI4**; 10.02.b03 DI delayed status. 7: **DI5**; 10.02.b04 DI delayed status. 8: **DI6**; 10.02.b05 DI delayed status. 11: **DIO1**; 11.02.b00 DIO delayed status. 12: **DIO2**; 11.02.b01 DIO delayed status. 19: **DIL**; 10.02.b15 DI delayed status.						
	0 … 19	Acknowledge unused	-	1 = 1	n	y	Parameter

Index	Name						
	Text						
	Range	**Default**	**Unit**	**Scale FbEq16**	**Volatile**	**Change running**	**Type**
19.38	**Controller fan acknowledge source**						
	Unit fan acknowledge source (cooling fan). The event generates fault 3808 Controller fan acknowledge if the unit fan acknowledge or pressure switch feedback is missing. **Other [bit]**; source selection. 0: **No acknowledge**; 0, generates fault 3808 Controller fan acknowledge. 1: **Acknowledge unused**; disable fault 3808 Controller fan acknowledge. 3: **DI1**; 10.02.b00 DI delayed status. 4: **DI2**; 10.02.b01 DI delayed status. 5: **DI3**; 10.02.b02 DI delayed status. 6: **DI4**; 10.02.b03 DI delayed status. 7: **DI5**; 10.02.b04 DI delayed status. 8: **DI6**; 10.02.b05 DI delayed status. 11: **DIO1**; 11.02.b00 DIO delayed status. 12: **DIO2**; 11.02.b01 DIO delayed status. 19: **DIL**; 10.02.b15 DI delayed status.						
	0 ... 19	Acknowledge unused	-	1 = 1	n	y	Parameter
19.39	**Controller fan delay time**						
	Delay time for the unit fan. After the unit has removed the Enable command the fan continues to run until 19.39 Controller fan delay time is elapsed. If a unit overtemperature is pending, the delay starts after the temperature has dropped below the overtemperature level.						
	0.0 … 3250.0	0.0	s	10 = 1 s	n	y	Parameter
19.40	**Leg 1 Phase Angle Ramps Enable**						
	Enables the phase angle ramps of leg 1. In disabled condition, the outputs of the ramps are forced to zero. **Other [bit]**; source selection. 0: **Disable**; 0; disable the phase angle ramp of leg 1. 1: **Enable**; 1; enable the phase angle ramp of leg 1. 3: **DI1**; 10.02.b00 DI delayed status. 4: **DI2**; 10.02.b01 DI delayed status. 5: **DI3**; 10.02.b02 DI delayed status. 6: **DI4**; 10.02.b03 DI delayed status. 7: **DI5**; 10.02.b04 DI delayed status. 8: **DI6**; 10.02.b05 DI delayed status. 11: **DIO1**; 11.02.b00 DIO delayed status. 12: **DIO2**; 11.02.b01 DIO delayed status. 19: **DIL**; 10.02.b15 DI delayed status. 21: **Leg 1 Operating (06.14.b04)**; see 06.14.b04 Leg 1 Status Word.						
	0 … 21	Leg 1 Operating 6.14.04	-	1 = 1	n	y	Parameter
19.41	**Leg 2 Phase Angle Ramps Enable**						
	Enables the phase angle ramps of leg 2. In disabled condition, the outputs of the ramps are forced to zero. **Other [bit]**; source selection. 0: **Disable**; 0; disable the phase angle ramp of leg 2. 1: **Enable**; 1; enable the phase angle ramp of leg 2. 3: **DI1**; 10.02.b00 DI delayed status. 4: **DI2**; 10.02.b01 DI delayed status. 5: **DI3**; 10.02.b02 DI delayed status. 6: **DI4**; 10.02.b03 DI delayed status. 7: **DI5**; 10.02.b04 DI delayed status.						

Index	Name						
	Text						
	Range	Default	Unit	Scale FbEq16	Volatile	Change running	Type
	8: **DI6**; 10.02.b05 DI delayed status. 11: **DIO1**; 11.02.b00 DIO delayed status. 12: **DIO2**; 11.02.b01 DIO delayed status. 19: **DIL**; 10.02.b15 DI delayed status. 21: **Leg 2 Operating (06.15.b04)**; see 06.15.b04 Leg 2 Status Word.						
	0 … 21	Leg 2 Operating 6.15.04	-	1 = 1	n	y	Parameter
19.42	**Leg 3 Phase Angle Ramps Enable**						
	Enables the phase angle ramps of leg 2. In disabled condition, the outputs of the ramps are forced to zero. **Other [bit]**; source selection. 0: **Disable**; 0; disable the phase angle ramp of leg 3. 1: **Enable**; 1; enable the phase angle ramp of leg 3. 3: **DI1**; 10.02.b00 DI delayed status. 4: **DI2**; 10.02.b01 DI delayed status. 5: **DI3**; 10.02.b02 DI delayed status. 6: **DI4**; 10.02.b03 DI delayed status. 7: **DI5**; 10.02.b04 DI delayed status. 8: **DI6**; 10.02.b05 DI delayed status. 11: **DIO1**; 11.02.b00 DIO delayed status. 12: **DIO2**; 11.02.b01 DIO delayed status. 19: **DIL**; 10.02.b15 DI delayed status. 21: **Leg 3 Operating (06.16.b04)**; see 06.16.b04 Leg 3 Status Word.						
	0 … 21	Leg 3 Operating 6.16.04	-	1 = 1	n	y	Parameter
19.46	**Leg 1 Auto reference ON level**						
	Automatic Run command generation for leg 1. 19.02 Leg 1 Run Local I/O = Auto reference is active, if 23.01 Leg 1 Main Ref (22.11) is greater than 19.46 Leg 1 Auto reference ON level.						
	0.00 … 325.00	10.00	%	100 = 1 %	n	y	Parameter
19.47	**Leg 2 Auto reference ON level**						
	Automatic Run command generation for leg 2. 19.04 Leg 2 Run Local I/O = Auto reference is active, if 25.01 Leg 2 Main Ref (24.11) is greater than 19.47 Leg 2 Auto reference ON level.						
	0.00 … 325.00	10.00	%	100 = 1 %	n	y	Parameter
19.48	**Leg 3 Auto reference ON level**						
	Automatic Run command generation for leg 3. 19.06 Leg 3 Run Local I/O = Auto reference is active, if 27.01 Leg 3 Main Ref (26.11) is greater than 19.48 Leg 3 Auto reference ON level.						
	0.00 … 325.00	10.00	%	100 = 1 %	n	y	Parameter

21 General References

Includes fix references, external references, and motor potentiometer settings.

Index	Name						
	Text						
	Range	Default	Unit	Scale FbEq16	Volatile	Change running	Type
21.01	**Fix reference 1**						
	Fix reference 1 in percent of nominal load current, load voltage or load power. Selection see groups 22, 24 and 26.						
	0.00 … 325.00	0.00	%	100 = 1 %	n	y	Parameter

Index	Name						
	Text						
	Range	**Default**	**Unit**	**Scale FbEq16**	**Volatile**	**Change running**	**Type**
21.02	**Fix reference 2**						
	Fix reference 2 in percent of nominal load current, load voltage or load power. Selection see groups 22, 24 and 26.						
	0.00 … 325.00	0.00	%	100 = 1 %	n	y	Parameter
21.03	**Fix reference 3**						
	Fix reference 3 in percent of nominal load current, load voltage or load power. Selection see groups 22, 24 and 26.						
	0.00 … 325.00	0.00	%	100 = 1 %	n	y	Parameter
21.04	**Fix reference 4**						
	Fix reference 4 in percent of nominal load current, load voltage or load power. Selection see groups 22, 24 and 26. **Note**: Can only be selected using function Other.						
	0.00 … 325.00	0.00	%	100 = 1 %	n	y	Parameter
21.05	**Fix reference 5**						
	Fix reference 5 in percent of nominal load current, load voltage or load power. Selection see groups 22, 24 and 26. **Note**: Can only be selected using function Other.						
	0.00 … 325.00	0.00	%	100 = 1 %	n	y	Parameter
21.06	**Fix reference 6**						
	Fix reference 6 in percent of nominal load current, load voltage or load power. Selection see groups 22, 24 and 26. **Note**: Can only be selected using function Other.						
	0.00 … 325.00	0.00	%	100 = 1 %	n	y	Parameter
21.11	**Ext reference 1**						
	External reference 1 in percent of nominal load current, load voltage or load power. Selection see groups 22, 24 and 26.						
	0.00 … 325.00	0.00	%	100 = 1 %	n	y	Parameter
21.12	**Ext reference 2**						
	External reference 2 in percent of nominal load current, load voltage or load power. Selection see groups 22, 24 and 26.						
	0.00 … 325.00	0.00	%	100 = 1 %	n	y	Parameter
21.13	**Ext reference 3**						
	External reference 3 in percent of nominal load current, load voltage or load power. Selection see groups 22, 24 and 26.						
	0.00 … 325.00	0.00	%	100 = 1 %	n	y	Parameter
21.14	**Ext reference 4**						
	External reference 4 in percent of nominal load current, load voltage or load power. Selection see groups 22, 24 and 26. **Note**: Can only be selected using function Other.						
	0.00 … 325.00	0.00	%	100 = 1 %	n	y	Parameter
21.15	**Ext reference 5**						
	External reference 5 in percent of nominal load current, load voltage or load power. Selection see groups 22, 24 and 26. **Note**: Can only be selected using function Other.						
	0.00 … 325.00	0.00	%	100 = 1 %	n	y	Parameter
21.16	**Ext reference 6**						
	External reference 6 in percent of nominal load current, load voltage or load power. Selection see groups 22, 24 and 26. **Note**: Can only be selected using function Other.						
	0.00 … 325.00	0.00	%	100 = 1 %	n	y	Parameter

Index	Name						
	Text						
	Range	Default	Unit	Scale FbEq16	Volatile	Change running	Type
21.71	**Motor potentiometer function**						
	Motor potentiometer function. Activates and selects the mode of the motor potentiometer. 0: **Disable**; disable the motor potentiometer and set its value to 0. 1: **Enable (initialization at stop/power-up)**; the motor potentiometer first adopts the value set by 21.72 Motor potentiometer initial value. When the unit is operating, the value can be adjusted from the up and down sources defined by 21.73 Motor potentiometer up source and 21.74 Motor potentiometer down source. A stop or a power cycle will reset the motor potentiometer to the initial value set by 21.72 Motor potentiometer initial value. 2: **Enable (resume always)**; the motor potentiometer value is retained over a stop or a power cycle. The value can be adjusted from the up and down sources defined by 21.73 Motor potentiometer up source and 21.74 Motor potentiometer down source, independent of the unit status.						
	0 … 2	Disable	-	1 = 1	n	y	Parameter
21.72	**Motor potentiometer initial value**						
	Initial value for motor potentiometer. Defines an initial value (starting point) for the motor potentiometer. See 21.71 Motor potentiometer function.						
	0.00 … 325.00	0.00	%	100 = 1 %	n	y	Parameter
21.73	**Motor potentiometer up source**						
	Source for motor potentiometer up. Selects the source for motor potentiometer up signal. **Other [bit]**; source selection. 0: **Disable**; 0, hold the motor potentiometer value. 1: **Enable**; 1, increase the motor potentiometer value. If both the up and down sources are on, the potentiometer value will not change. 3: **DI1**; 10.02.b00 DI delayed status. 4: **DI2**; 10.02.b01 DI delayed status. 5: **DI3**; 10.02.b02 DI delayed status. 6: **DI4**; 10.02.b03 DI delayed status. 7: **DI5**; 10.02.b04 DI delayed status. 8: **DI6**; 10.02.b05 DI delayed status. 11: **DIO1**; 11.02.b00 DIO delayed status. 12: **DIO2**; 11.02.b01 DIO delayed status. 19: **DIL**; 10.02.b15 DI delayed status.						
	0 … 19	Disable	-	1 = 1	n	y	Parameter
21.74	**Motor potentiometer down source**						
	Source for motor potentiometer down. Selects the source for motor potentiometer down signal. **Other [bit]**; source selection. 0: **Disable**; 0, hold the motor potentiometer value. 1: **Enable**; 1, decrease the motor potentiometer value. If both the up and down sources are on, the potentiometer value will not change. 3: **DI1**; 10.02.b00 DI delayed status. 4: **DI2**; 10.02.b01 DI delayed status. 5: **DI3**; 10.02.b02 DI delayed status. 6: **DI4**; 10.02.b03 DI delayed status. 7: **DI5**; 10.02.b04 DI delayed status. 8: **DI6**; 10.02.b05 DI delayed status. 11: **DIO1**; 11.02.b00 DIO delayed status.						

Index	Name						
	Text						
	Range	**Default**	**Unit**	**Scale FbEq16**	**Volatile**	**Change running**	**Type**
	12: **DIO2**; 11.02.b01 DIO delayed status. 19: **DIL**; 10.02.b15 DI delayed status. 21: **DI1 or stop**; 10.02.b00 DI delayed status plus stop. DI1 = 1 or stop command active → the motor potentiometer value is decreased, DI1 = 0: the motor potentiometer value is held. 22: **DI2 or stop**; 10.02.b01 DI delayed status plus stop. DI2 = 1 or stop command active → the motor potentiometer value is decreased, DI2 = 0: the motor potentiometer value is held. 23: **DI3 or stop**; 10.02.b02 DI delayed status plus stop. DI3 = 1 or stop command active → the motor potentiometer value is decreased, DI3 = 0: the motor potentiometer value is held. 24: **DI4 or stop**; 10.02.b03 DI delayed status plus stop. DI4 = 1 or stop command active → the motor potentiometer value is decreased, DI4 = 0: the motor potentiometer value is held. 25: **DI5 or stop**; 10.02.b04 DI delayed status plus stop. DI5 = 1 or stop command active → the motor potentiometer value is decreased, DI5 = 0: the motor potentiometer value is held. 26: **DI6 or stop**; 10.02.b05 DI delayed status plus stop. DI6 = 1 or stop command active → the motor potentiometer value is decreased, DI6 = 0: the motor potentiometer value is held. 29: **DIO1 or stop**; 11.02.b00 DIO delayed status plus stop. DIO1 = 1 or stop command active → the motor potentiometer value is decreased, DIO1 = 0: the motor potentiometer value is held. 30: **DIO2 or stop**; 11.02.b01 DIO delayed status plus stop. DIO2 = 1 or stop command active → the motor potentiometer value is decreased, DIO2 = 0: the motor potentiometer value is held. 37: **DIL or stop**; 10.02.b15 DI delayed status plus stop. DIL = 1 or stop command active → the motor potentiometer value is decreased, DIL = 0: the motor potentiometer value is held.						
	0 … 37	Disable	-	1 = 1	n	y	Parameter
21.75	**Motor potentiometer ramp time**						
	Motor potentiometer change time. Defines the change rate of the motor potentiometer. This is the time required for the motor potentiometer to change from 21.76 Motor potentiometer min value to 21.77 Motor potentiometer max value. The same change rate applies in both directions (up and down).						
	0.0 … 3000.0	10.0	s	10 = 1 s	n	y	Parameter
21.76	**Motor potentiometer min value**						
	Motor potentiometer minimum. Defines the minimum value of the motor potentiometer in percent of nominal load current, load voltage or load power. See 99.02 Load Current, 99.03 Load Voltage and 99.09 Load Power.						
	0.00 … 325.00	0.00	%	100 = 1 %	n	y	Parameter
21.77	**Motor potentiometer max value**						
	Motor potentiometer maximum. Defines the maximum value of the motor potentiometer in percent of nominal load current, load voltage or load power. See 99.02 Load Current, 99.03 Load Voltage and 99.09 Load Power.						
	0.00 … 325.00	100.00	%	100 = 1 %	n	y	Parameter
21.80	**Motor potentiometer ref act**						
	Value of the motor potentiometer. Displays the output of the motor potentiometer function in percent of nominal load current, load voltage or load power. See 99.02 Load Current, 99.03 Load Voltage and 99.09 Load Power.						
	0.00 … 325.00	-	%	100 = 1 %	y	n	Signal

22 Leg 1 Reference Chain

Leg 1 reference source selection.

Index	Name						
	Text						
	Range	Default	Unit	Scale FbEq16	Volatile	Change running	Type

Leg 1 reference chain:

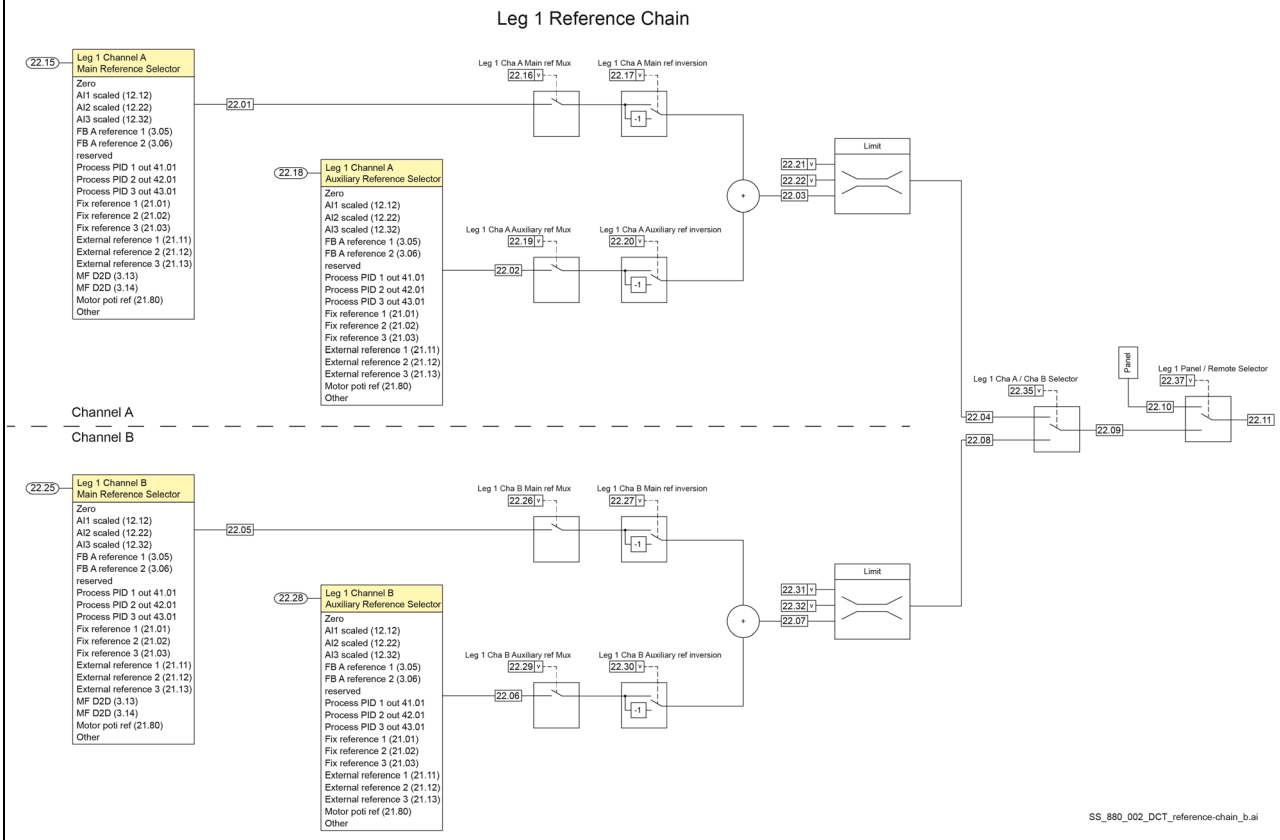

22.01	**Leg 1 Cha A Main Ref**						
	Main reference. Leg 1 channel A main reference in percent of nominal load current, load voltage or load power. See 99.02 Load Current, 99.03 Load Voltage and 99.09 Load Power.						
	0.00 … 325.00	-	%	100 = 1 %	y	n	Signal
22.02	**Leg 1 Cha A Auxiliary Ref**						
	Auxiliary reference. Leg 1 channel A auxiliary reference in percent of nominal load current, load voltage or load power. See 99.02 Load Current, 99.03 Load Voltage and 99.09 Load Power.						
	0.00 … 325.00	-	%	100 = 1 %	y	n	Signal
22.03	**Leg 1 Cha A Sum Ref**						
	Sum of main and auxiliary references. Leg 1 channel A sum of main and auxiliary references in percent of nominal load current, load voltage or load power. See 99.02 Load Current, 99.03 Load Voltage and 99.09 Load Power.						
	0.00 … 325.00	-	%	100 = 1 %	y	n	Signal
22.04	**Leg 1 Cha A Sum Ref after limit**						
	Sum reference after limit. Leg 1 channel A sum reference after applying limits 22.21 Leg 1 Cha A Max and 22.22 Leg 1 Cha A Min in percent of nominal load current, load voltage or load power. See 99.02 Load Current, 99.03 Load Voltage and 99.09 Load Power.						
	0.00 … 325.00	-	%	100 = 1 %	y	n	Signal

Index	Name						
	Text						
	Range	Default	Unit	Scale FbEq16	Volatile	Change running	Type
22.05	**Leg 1 Cha B Main Ref**						
	Main reference. Leg 1 channel B main reference in percent of nominal load current, load voltage or load power. See 99.02 Load Current, 99.03 Load Voltage and 99.09 Load Power.						
	0.00 … 325.00	-	%	100 = 1 %	y	n	Signal
22.06	**Leg 1 Cha B Auxiliary Ref**						
	Auxiliary reference. Leg 1 channel B auxiliary reference in percent of nominal load current, load voltage or load power. See 99.02 Load Current, 99.03 Load Voltage and 99.09 Load Power.						
	0.00 … 325.00	-	%	100 = 1 %	y	n	Signal
22.07	**Leg 1 Cha B Sum Ref**						
	Sum of main and auxiliary references. Leg 1 channel B sum of main and auxiliary references in percent of nominal load current, load voltage or load power. See 99.02 Load Current, 99.03 Load Voltage and 99.09 Load Power.						
	0.00 … 325.00	-	%	100 = 1 %	y	n	Signal
22.08	**Leg 1 Cha B Sum Ref after limit**						
	Sum reference after limit. Leg 1 channel B sum reference after applying limits 22.31 Leg 1 Cha B Max and 22.32 Leg 1 Cha B Min in percent of nominal load current, load voltage or load power. See 99.02 Load Current, 99.03 Load Voltage and 99.09 Load Power.						
	0.00 … 325.00	-	%	100 = 1 %	y	n	Signal
22.09	**Leg 1 Reference**						
	Leg 1 general reference. Leg 1 reference after 22.35 Leg 1 Cha A/Cha B Selector in percent of nominal load current, load voltage or load power. See 99.02 Load Current, 99.03 Load Voltage and 99.09 Load Power.						
	0.00 … 325.00	-	%	100 = 1 %	y	n	Signal
22.10	**Leg 1 Panel Ref**						
	Reference from control panel. Leg 1 reference from control panel in percent of nominal load current, load voltage or load power. See 99.02 Load Current, 99.03 Load Voltage and 99.09 Load Power.						
	0.00 … 325.00	-	%	100 = 1 %	y	n	Signal
22.11	**Leg 1 Actual Ref**						
	Leg 1 final (actual) reference. Leg 1 final (actual) reference after 22.37 Leg 1 Panel/Remote Selector in percent of nominal load current, load voltage or load power. See 99.02 Load Current, 99.03 Load Voltage and 99.09 Load Power.						
	0.00 … 325.00	-	%	100 = 1 %	y	n	Signal
22.15	**Leg 1 Cha A Main Ref Selector**						
	Source for main reference. Selects the source for 22.01 Leg 1 Cha A Main ref. **Other**; source selection. 0: **Zero**; 0 %, reference is set to zero. 1: **AI1 scaled (12.12)**; 12.12 AI1 scaled value. 2: **AI2 scaled (12.22)**; 12.22 AI2 scaled value. 3: **AI3 scaled (12.32)**; 12.32 AI3 scaled value. 4: **FBA A reference 1 (03.05)**; 03.05 FBA A reference 1. 5: **FBA A reference 2 (03.06)**; 03.06 FBA A reference 2. 7: **Process PID 1 out (41.01)**; 41.01 Process PID 1 output actual. 8: **Process PID 2 out (42.01)**; 42.01 Process PID 2 output actual.						

Index	Name						
	Text						
	Range	**Default**	**Unit**	**Scale FbEq16**	**Volatile**	**Change running**	**Type**
	9: **Process PID 3 out (43.01)**; 43.01 Process PID 3 output actual. 10: **Fix reference 1 (21.01)**; 21.01 Fix reference 1. 11: **Fix reference 2 (21.02)**; 21.02 Fix reference 2. 12: **Fix reference 3 (21.03)**; 21.03 Fix reference 3. 13: **External reference 1 (21.11)**; 21.11 Ext reference 1. 14: **External reference 2 (21.12)**; 21.12 Ext reference 2. 15: **External reference 3 (21.13)**; 21.13 Ext reference 3. 16: **MF D2D ref1 (03.13)**; 03.13 M/F or D2D ref1. 17: **MF D2D ref2 (03.14)**; 03.14 M/F or D2D ref2. 18: **Motor poti ref (21.80)**; 21.80 Motor potentiometer ref act.						
	0 … 18	AI1 scaled (12.12)	-	1 = 1	n	y	Parameter
22.16	**Leg 1 Cha A Main Ref Mux**						
	On/Off main reference. Selects the operator for leg 1 channel A main reference switch. **Other [bit]**; source selection. 0: **Open**; 0, disable leg 1 channel A reference. 1: **Close**; 1, enable leg 1 channel A reference. 3: **DI1**; 10.02.b00 DI delayed status. 4: **DI2**; 10.02.b01 DI delayed status. 5: **DI3**; 10.02.b02 DI delayed status. 6: **DI4**; 10.02.b03 DI delayed status. 7: **DI5**; 10.02.b04 DI delayed status. 8: **DI6**; 10.02.b05 DI delayed status. 11: **DIO1**; 11.02.b00 DIO delayed status. 12: **DIO2**; 11.02.b01 DIO delayed status. 19: **DIL**; 10.02.b15 DI delayed status.						
	0 … 19	Close	-	1 = 1	n	y	Parameter
22.17	**Leg 1 Cha A Main Ref Inversion**						
	Direct/Inverted main reference. Selects the operator for leg 1 channel A main reference inversion switch (multiplication with -1). **Other [bit]**; source selection. 0: **Normal**; 0, direct reference. 1: **Inverse**; 1, inverse reference. 3: **DI1**; 10.02.b00 DI delayed status. 4: **DI2**; 10.02.b01 DI delayed status. 5: **DI3**; 10.02.b02 DI delayed status. 6: **DI4**; 10.02.b03 DI delayed status. 7: **DI5**; 10.02.b04 DI delayed status. 8: **DI6**; 10.02.b05 DI delayed status. 11: **DIO1**; 11.02.b00 DIO delayed status. 12: **DIO2**; 11.02.b01 DIO delayed status. 19: **DIL**; 10.02.b15 DI delayed status.						
	0 … 19	Normal	-	1 = 1	n	y	Parameter
22.18	**Leg 1 Cha A Auxiliary Ref Selector**						
	Source for auxiliary reference. Selects the source for 22.02 Leg 1 Cha A Auxiliary Ref. See 22.15 Leg 1 Cha A Main Ref Selector.						
	0 … 18	Zero	-	1 = 1	n	y	Parameter

Index	Name						
	Text						
	Range	Default	Unit	Scale FbEq16	Volatile	Change running	Type
22.19	**Leg 1 Cha A Auxiliary Ref Mux**						
	On/Off auxiliary reference. Selects the operator for leg 1 channel A auxiliary reference switch. See 22.16 Leg 1 Cha A Main Ref Mux.						
	0 … 19	Open	-	1 = 1	n	y	Parameter
22.20	**Leg 1 Cha A Auxiliary Ref Inversion**						
	Direct/Inverted auxiliary reference. Selects the operator for leg 1 channel A auxiliary reference inversion switch (multiplication with -1). See 22.17 Leg 1 Cha A Main Ref Inversion.						
	0 … 19	Normal	-	1 = 1	n	y	Parameter
22.21	**Leg 1 Cha A Max**						
	Upper limit for the sum reference. Upper limit for leg 1 channel A sum reference in percent of nominal load current, load voltage or load power. See 99.02 Load Current, 99.03 Load Voltage and 99.09 Load Power.						
	0.00 … 325.00	100.00	%	100 = 1 %	n	y	Parameter
22.22	**Leg 1 Cha A Min**						
	Lower limit for the sum reference. Lower limit for leg 1 channel A sum reference in percent of nominal load current, load voltage or load power. See 99.02 Load Current, 99.03 Load Voltage and 99.09 Load Power.						
	0.00 … 325.00	0.00	%	100 = 1 %	n	y	Parameter
22.25	**Leg 1 Cha B Main Ref Selector**						
	Source for main reference. Selects the source for 22.05 Leg 1 Cha B Main ref. See 22.15 Leg 1 Cha A Main Ref Selector.						
	0 … 18	Fix reference 1 (21.01)	-	1 = 1	n	y	Parameter
22.26	**Leg 1 Cha B Main Ref Mux**						
	On/Off main reference. Selects the operator for leg 1 channel B main reference switch. See 22.16 Leg 1 Cha A Main Ref Mux.						
	0 … 19	Close	-	1 = 1	n	y	Parameter
22.27	**Leg 1 Cha B Main Ref Inversion**						
	Direct/Inverted main reference. Selects the operator for leg 1 channel B main reference inversion switch (multiplication with -1). See 22.17 Leg 1 Cha A Main Ref Inversion.						
	0 … 19	Normal	-	1 = 1	n	y	Parameter
22.28	**Leg 1 Cha B Auxiliary Ref Selector**						
	Source for auxiliary reference. Selects the source for 22.06 Leg 1 Cha B Auxiliary Ref. See 22.15 Leg 1 Cha A Main Ref Selector.						
	0 … 18	Zero	-	1 = 1	n	y	Parameter
22.29	**Leg 1 Cha B Auxiliary Ref Mux**						
	On/Off auxiliary reference. Selects the operator for leg 1 channel B auxiliary reference switch. See 22.16 Leg 1 Cha A Main Ref Mux.						
	0 … 19	Open	-	1 = 1	n	y	Parameter

Index	Name						
	Text						
	Range	Default	Unit	Scale FbEq16	Volatile	Change running	Type
22.30	**Leg 1 Cha B Auxiliary Ref Inversion**						
	Direct/Inverted auxiliary reference. Selects the operator for leg 1 channel B auxiliary reference inversion switch (multiplication with -1). See 22.17 Leg 1 Cha A Main Ref Inversion.						
	0 … 19	Normal	-	1 = 1	n	y	Parameter
22.31	**Leg 1 Cha B Max**						
	Upper limit for the sum reference. Upper limit for leg 1 channel B sum reference in percent of nominal load current, load voltage or load power. See 99.02 Load Current, 99.03 Load Voltage and 99.09 Load Power.						
	0.00 … 325.00	100.00	%	100 = 1 %	n	y	Parameter
22.32	**Leg 1 Cha B Min**						
	Lower limit for the sum reference. Lower limit for leg 1 channel B sum reference in percent of nominal load current, load voltage or load power. See 99.02 Load Current, 99.03 Load Voltage and 99.09 Load Power.						
	0.00 … 325.00	0.00	%	100 = 1 %	n	y	Parameter
22.35	**Leg 1 Cha A/Cha B Selector**						
	Source for general reference. Selects the source for 22.09 Leg 1 Reference. Low activates leg 1 channel A reference and high activates leg 1 channel B reference. **Other [bit]**; source selection. 0: **Channel A**; 0, enable channel A. 1: **Channel B**; 1, enable channel B. 3: **DI1**; 10.02.b00 DI delayed status. 4: **DI2**; 10.02.b01 DI delayed status. 5: **DI3**; 10.02.b02 DI delayed status. 6: **DI4**; 10.02.b03 DI delayed status. 7: **DI5**; 10.02.b04 DI delayed status. 8: **DI6**; 10.02.b05 DI delayed status. 11: **DIO1**; 11.02.b00 DIO delayed status. 12: **DIO2**; 11.02.b01 DIO delayed status. 19: **DIL**; 10.02.b15 DI delayed status.						
	0 … 19	Channel A	-	1 = 1	n	y	Parameter
22.37	**Leg 1 Panel/Remote Selector**						
	Source for the final (actual) reference. Selects the source for 22.11 Leg 1 Actual Ref. Low activates leg 1 general reference (reference chain) and high activates the control panel reference. **Other [bit]**; source selection. 0: **Remote**; 0, enable general reference. 1: **Panel**; 1, enable reference from the control panel. 2: **Auto**; automatic selection depending on local/remote selection. 3: **DI1**; 10.02.b00 DI delayed status. 4: **DI2**; 10.02.b01 DI delayed status. 5: **DI3**; 10.02.b02 DI delayed status. 6: **DI4**; 10.02.b03 DI delayed status. 7: **DI5**; 10.02.b04 DI delayed status. 8: **DI6**; 10.02.b05 DI delayed status. 11: **DIO1**; 11.02.b00 DIO delayed status.						

Index	Name						
	Text						
	Range	Default	Unit	Scale FbEq16	Volatile	Change running	Type
	12: **DIO2**; 11.02.b01 DIO delayed status. 19: **DIL**; 10.02.b15 DI delayed status.						
	0 … 19	Auto	-	1 = 1	n	y	Parameter

23 Leg 1 Control Detailed

Leg 1 control chain includes ramps, current/voltage/power control, control mode selector and limiters.

Index	Name						
	Text						
	Range	Default	Unit	Scale FbEq16	Volatile	Change running	Type
23.01	**Leg 1 Main Ref (22.11)**						
	Main reference for leg 1 control chain from leg 1 reference chain. See 22.11 Leg 1 Actual Ref.						
	0.00 … 325.00	-	%	100 = 1 %	y	n	Signal

Leg 1 control chain II:

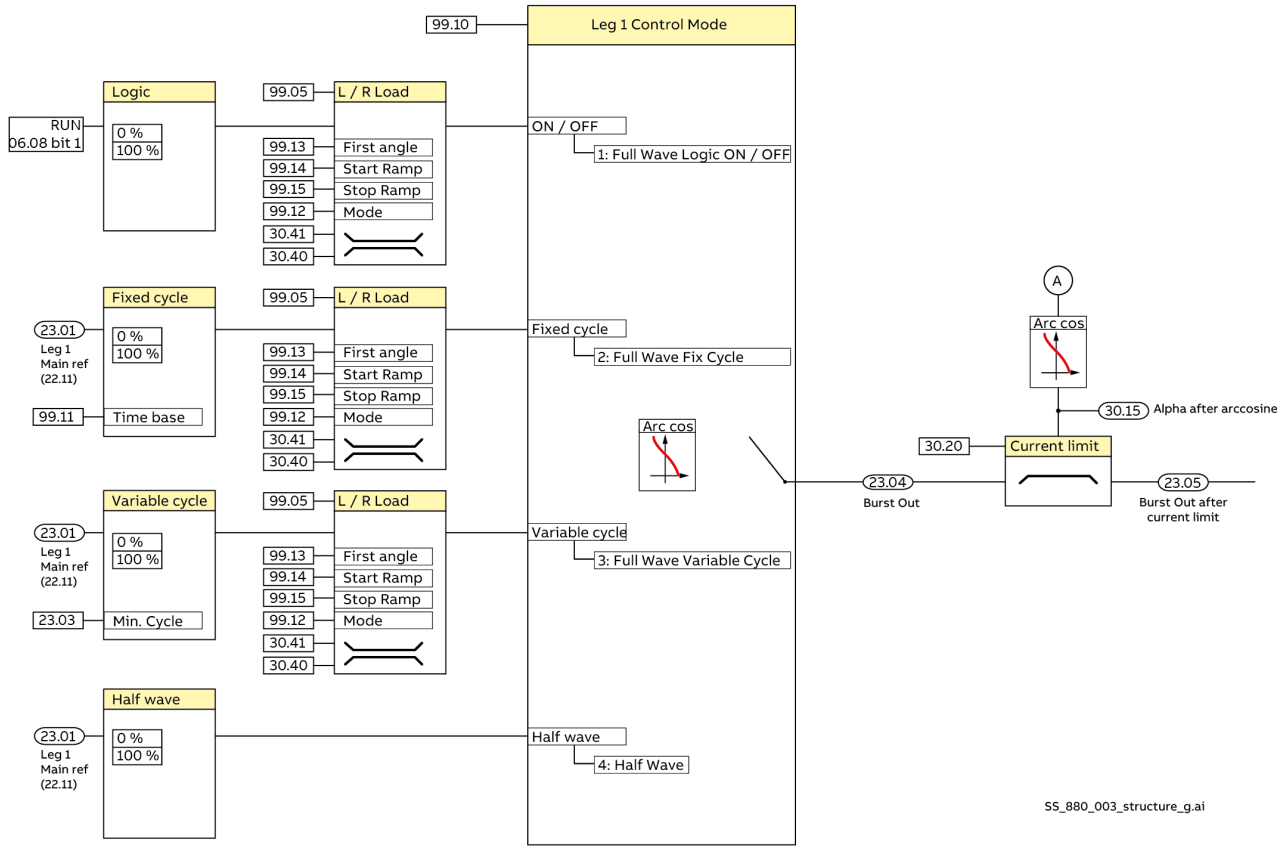

23.03	**Leg 1 Minimum Cycle Variable Burst**						
	Minimum on/off time for a full wave (burst) variable cycle. Defines the minimum on/off time when 99.10 Leg 1 Control Mode = Full wave variable cycle (= 3). For reference values below or equal 50 %, it defines the minimum on time. For reference values above 50 %, it defines the minimum off time.						
	1 … 6000	10	Periods	1 = 1 Periods	n	y	Parameter
23.04	**Leg 1 Burst Out**						
	Alpha reference after leg 1 control mode. Firing angle reference for 99.10 Leg 1 Control Mode = Full wave (burst)/Half wave (= 1 … 4).						
	0.0 … 180.0	-	°	10 = 1°	y	n	Signal

Index	Name						
	Text						
	Range	**Default**	**Unit**	**Scale FbEq16**	**Volatile**	**Change running**	**Type**
23.05	**Leg 1 Burst Out after Current Limit**						
	Alpha reference after limit. Firing angle reference for 99.10 Leg 1 Control Mode = Full wave (burst)/Half wave (= 1 … 4) after the current limiter.						
	0.0 … 180.0	-	°	10 = 1°	y	n	Signal
23.07	**Leg 1 2nd mode switching control**						

Switching between control modes.
Switching between 1st control mode (see 99.10 Leg 1 Control Mode) and 2nd control mode (see 23.10 Leg 1 2nd mode):
Fix either 1st control mode or 2nd control mode.
Automatic switching between 1st control mode and 2nd control mode by function 1 (preferred), function 2 or function 3:

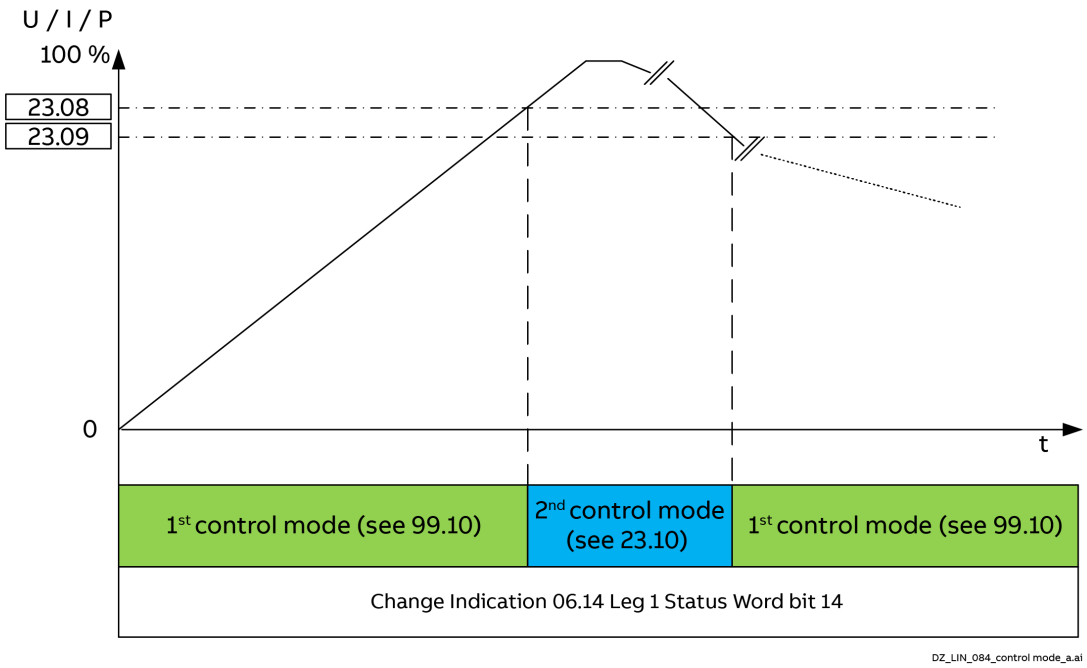

Remote switching between 1st control mode and 2nd control mode by bit (see 23.11 Leg 1 2nd mode control bit).
0: **Use (99.10)**; 0, 1st control mode active. See 99.10 Leg 1 Control Mode.
1: **Use (23.10)**; 1, 2nd control mode active. See 23.10 Leg 1 2nd mode.
2: **Function 1**; automatic switching between 1st control mode and 2nd control mode, see table below.
3: **Function 2**; automatic switching between 1st control mode and 2nd control mode, see table below.
4: **Function 3**; automatic switching between 1st control mode and 2nd control mode, see table below.
20: **By bit (23.11)**; remote switching between 1st control mode and 2nd control mode, see table below.
All in percent of 99.02 Load Current, 99.03 Load Voltage or 99.09 Load Power.

	Switch from 1st control mode to 2nd control mode	Switch from 2nd control mode to 1st control mode

Index	Name						
	Text						
	Range	**Default**	**Unit**	**Scale FbEq16**	**Volatile**	**Change running**	**Type**
	Function 1	Load voltage ≥ 23.08 Leg 1 2nd mode switching level 1		Load current ≥ 23.09 Leg 1 2nd mode switching level 2			
	Function 2	Load voltage ≥ 23.08 Leg 1 2nd mode switching level 1		Load voltage ≤ 23.09 Leg 1 2nd mode switching level 2			
	Function 3	Load current ≤ 23.08 Leg 1 2nd mode switching level 1		Load current ≥ 23.09 Leg 1 2nd mode switching level 2			
	By bit (23.11)	0 → 1		1 → 0			
	Note: Switching between 1st control mode and 2nd control mode is usually used to start resistive loads with high cold to hot ratios.						
	0 … 20	Use (99.10)	-	1 = 1	n	y	Parameter
23.08	**Leg 1 2nd mode switching level 1**						
	Level for automatic switching between control modes. First level for automatic switching between control modes set in 99.10 Leg 1 Control Mode and in 23.10 Leg 1 2nd mode, in percent of 99.02 Load Current, 99.03 Load Voltage or 99.09 Load Power. See 23.07 Leg 1 2nd mode switching control = 2 … 19.						
	0.00 … 325.00	95.00	%	100 = 1 %	n	y	Parameter
23.09	**Leg 1 2nd mode switching level 2**						
	Level for automatic switching between control modes. Second level for automatic switching between control modes set in 99.10 Leg 1 Control Mode and in 23.10 Leg 1 2nd mode, in percent of 99.02 Load Current, 99.03 Load Voltage or 99.09 Load Power. See 23.07 Leg 1 2nd mode switching control = 2 … 19.						
	0.00 … 325.00	90.00	%	100 = 1 %	n	y	Parameter
23.10	**Leg 1 2nd mode**						
	2nd control mode. Select the 2nd control mode. 0: **Full wave logic ON/OFF**; full wave is on (= 100 % load power) when 06.08 Used Main Control Word bit 0 = 1. Full wave is off (= 0 % load power) when 06.08 Used Main Control Word bit 0 = 0. 1: **Full wave fix cycle**; full wave (burst) with fix cycle control. The load power depends on 22.11 Leg 1 Actual Ref. 2: **Full wave variable cycle**; full wave (burst) with variable cycle control. The load power depends on 22.11 Leg 1 Actual Ref. 3: **Half wave**; half wave control. The load power depends on 22.11 Leg 1 Actual Ref.						
	0 … 3	Full wave fix cycle	-	1 = 1	n	y	Parameter
23.11	**Leg 1 2nd mode control bit**						
	Switching between control modes via a bit or a digital input. Switching between control modes set in 99.10 Leg 1 Control Mode and 23.10 Leg 1 2nd mode via a bit or a digital input. **Other [bit]**; source selection. 0: **Disable**; 0, enable the control mode set in 99.10 Leg 1 Control Mode. 1: **Enable**; 1, enable the control mode set in 23.10 Leg 1 2nd mode. 3: **DI1**; 10.02.b00 DI delayed status. 4: **DI2**; 10.02.b01 DI delayed status. 5: **DI3**; 10.02.b02 DI delayed status. 6: **DI4**; 10.02.b03 DI delayed status. 7: **DI5**; 10.02.b04 DI delayed status. 8: **DI6**; 10.02.b05 DI delayed status. 11: **DIO1**; 11.02.b00 DIO delayed status. 12: **DIO2**; 11.02.b01 DIO delayed status. 19: **DIL**; 10.02.b15 DI delayed status.						
	0 … 19	Disable	-	1 = 1	n	y	Parameter

Index	Name						
	Text						
	Range	Default	Unit	Scale FbEq16	Volatile	Change running	Type
Leg 1 current control chain: 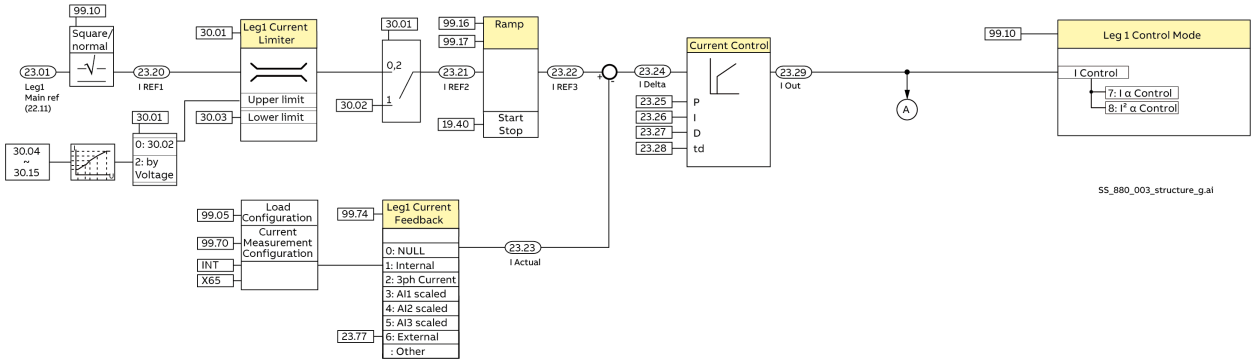							
23.20	**Leg 1 Current Control Ref 1**						
	Current reference 1. Leg 1 current reference after the square root block for I^2 control in percent of 99.02 Load Current. Valid when 99.10 Leg 1 Control Mode = I α control or I^2 α control (= 7 or 8).						
	0.00 … 325.00	-	%	100 = 1 %	y	n	Signal
23.21	**Leg 1 Current Control Ref 2**						
	Current reference 2. Leg 1 current reference after applying 30.02 Leg 1 Current Limit Max and 30.03 Leg 1 Current Limit Min in percent of 99.02 Load Current.						
	0.00 … 325.00	-	%	100 = 1 %	y	n	Signal
23.22	**Leg 1 Current Control Ref 3**						
	Current reference 3. Leg 1 current reference after 99.16 Leg 1 Phase Angle Soft Start Ramp in percent of 99.02 Load Current.						
	0.00 … 325.00	-	%	100 = 1 %	y	n	Signal
23.23	**Leg 1 Current Actual**						
	Current actual. Leg 1 actual current for the current controller in percent of 99.02 Load Current.						
	0.00 … 325.00	-	%	100 = 1 %	y	n	Signal
23.24	**Leg 1 Current Control Delta**						
	Current deviation. Leg 1 delta current for the current controller in percent of 99.02 Load Current.						
	-325.00 … 325.00	-	%	100 = 1 %	y	n	Signal
23.25	**Leg 1 Current Control P-Gain**						
	P-gain. Leg 1 p-gain for the current controller.						
	0.000 … 100.000	0.300	-	100 = 1	n	y	Parameter
23.26	**Leg 1 Current Control I-Time**						
	I-time. Leg 1 i-time for the current controller.						
	0.00 … 100.00	0.10	s	100 = 1 s	n	y	Parameter
23.27	**Leg 1 Current Control D-Time**						
	D-time. Leg 1 d-time for the current controller.						
	0.00 … 100.00	0.00	s	100 = 1 s	n	y	Parameter

Index	Name						
	Text						
	Range	Default	Unit	Scale FbEq16	Volatile	Change running	Type
23.28	**Leg 1 Current Control D-Filter Time**						
	D-filter time. Leg 1 d-filter time for the current controller.						
	0.00 … 100.00	0.01	s	100 = 1 s	n	y	Parameter
23.29	**Leg 1 Current Control Out**						
	Output current controller. Leg 1 output of the current controller in percent of 99.02 Load Current.						
	0.00 … 325.00	-	%	100 =1 %	y	n	Signal

Leg 1 voltage control chain:

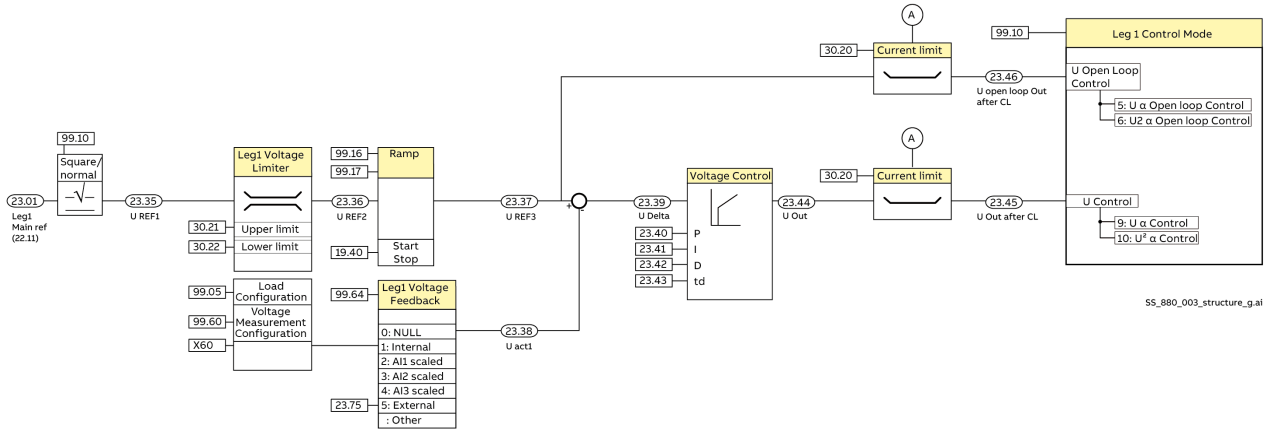

23.35	**Leg 1 Voltage Control Ref 1**						
	Voltage reference 1. Leg 1 voltage reference after the square root block for U² control in percent of 99.03 Load Voltage. Valid when 99.10 Leg 1 Control Mode = U α Open loop control, U^2 α Open loop control, U α control or U^2 α control (= 5, 6, 9 or 10).						
	0.00 … 325.00	-	%	100 = 1 %	y	n	Signal
23.36	**Leg 1 Voltage Control Ref 2**						
	Voltage reference 2. Leg 1 voltage reference after applying limits 30.21 Leg 1 Voltage Limit Max and 30.22 Leg 1 Voltage Limit Min in percent of 99.03 Load Voltage.						
	0.00 … 325.00	-	%	100 = 1 %	y	n	Signal
23.37	**Leg 1 Voltage Control Ref 3**						
	Voltage reference 3. Leg 1 voltage reference after 99.16 Leg 1 Phase Angle Soft Start Ramp in percent of 99.03 Load Voltage.						
	0.00 … 325.00	-	%	100 = 1 %	y	n	Signal
23.38	**Leg 1 Voltage Actual**						
	Voltage actual. Leg 1 actual voltage for the voltage controller in percent of 99.03 Load Voltage.						
	0.00 … 325.00	-	%	100 = 1 %	y	n	Signal
23.39	**Leg 1 Voltage Control Delta**						
	Voltage deviation. Leg 1 delta voltage for the voltage controller in percent of 99.03 Load Voltage.						
	-325.00 … 325.00	-	%	100 = 1 %	y	n	Signal
23.40	**Leg 1 Voltage Control P-Gain**						
	P-gain. Leg 1 p-gain for the voltage controller.						
	0.000 … 100.000	0.300	-	100 = 1	n	y	Parameter

Index	Name						
	Text						
	Range	**Default**	**Unit**	**Scale FbEq16**	**Volatile**	**Change running**	**Type**
23.41	**Leg 1 Voltage Control I-Time**						
	I-time. Leg 1 i-time for the voltage controller.						
	0.00 … 100.00	0.10	s	100 = 1 s	n	y	Parameter
23.42	**Leg 1 Voltage Control D-Time**						
	D-time. Leg 1 d-time for the voltage controller.						
	0.00 … 100.00	0.00	s	100 = 1 s	n	y	Parameter
23.43	**Leg 1 Voltage Control D-Filter Time**						
	D-filter time. Leg 1 d-filter time for the voltage controller.						
	0.00 … 100.00	0.01	s	100 = 1 s	n	y	Parameter
23.44	**Leg 1 Voltage Control Out**						
	Output voltage controller. Leg 1 output of the voltage controller in percent of 99.03 Load Voltage.						
	0.00 … 325.00	-	%	100 = 1 %	y	n	Signal
23.45	**Leg 1 Voltage Control Out after Current Limit**						
	Output voltage controller after limit. Leg 1 output of the voltage controller after applying limit 30.20 Leg 1 Current Limit in percent of 99.03 Load Voltage.						
	0.00 … 325.00	-	%	100 = 1 %	y	n	Signal
23.46	**Leg 1 Voltage Control Out open loop**						
	Voltage reference for open loop control after limit. Leg 1 voltage reference for open loop control after applying limit 30.20 Leg 1 Current Limit in percent of 99.03 Load Voltage.						
	0.00 … 325.00	-	%	100 = 1 %	y	n	Signal

Leg 1 power control chain:

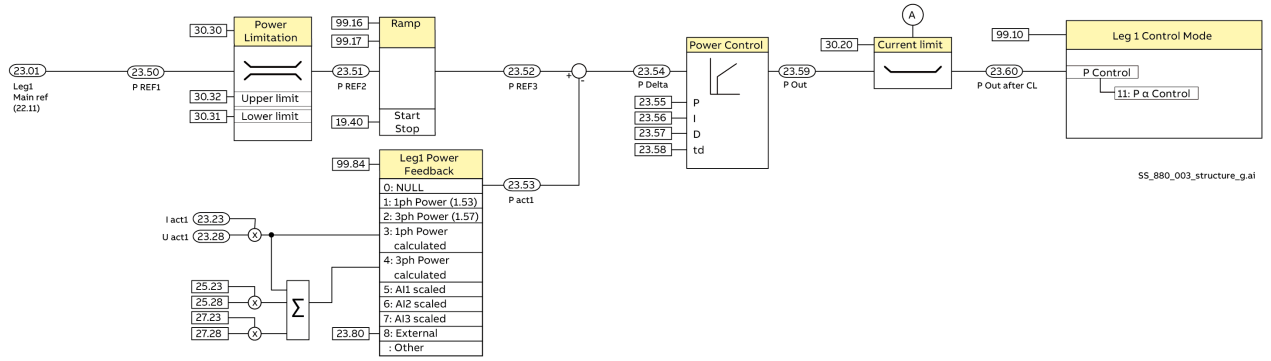

23.50	**Leg 1 Power Control Ref 1**						
	Power reference 1. Leg 1 power reference in percent of 99.09 Load Power. Valid when 99.10 Leg 1 Control Mode = P α control (= 11).						
	0.00 … 325.00	-	%	100 = 1 %	y	n	Signal
23.51	**Leg 1 Power Control Ref 2**						
	Power reference 2. Leg 1 power reference after applying limits 30.31 Leg 1 Power Limit Max and 30.32 Leg 1 Power Limit Min in percent of 99.09 Load Power.						
	0.00 … 325.00	-	%	100 = 1 %	y	n	Signal

Index	Name						
	Text						
	Range	**Default**	**Unit**	**Scale FbEq16**	**Volatile**	**Change running**	**Type**
23.52	**Leg 1 Power Control Ref 3**						
	Power reference 3. Leg 1 power reference after 99.16 Leg 1 Phase Angle Soft Start Ramp in percent of 99.09 Load Power.						
	0.00 … 325.00	-	%	100 = 1 %	y	n	Signal
23.53	**Leg 1 Power Actual**						
	Power actual. Leg 1 actual power for the power controller in percent of 99.09 Load Power.						
	0.00 … 325.00	-	%	100 = 1 %	y	n	Signal
23.54	**Leg 1 Power Control Delta**						
	Power deviation. Leg 1 delta power for the power controller in percent of 99.09 Load Power.						
	-325.00 … 325.00	-	%	100 = 1 %	y	n	Signal
23.55	**Leg 1 Power Control P-Gain**						
	P-gain. Leg 1 p-gain for the power controller.						
	0.000 … 100.000	0.300	-	100 = 1	n	y	Parameter
23.56	**Leg 1 Power Control I-Time**						
	I-time. Leg 1 i-time for the power controller						
	0.00 … 100.00	0.10	s	100 = 1 s	n	y	Parameter
23.57	**Leg 1 Power Control D-Time**						
	D-time. Leg 1 d-time for the power controller.						
	0.00 … 100.00	0.00	s	100 = 1 s	n	y	Parameter
23.58	**Leg 1 Power Control D-Filter Time**						
	D-filter time. Leg 1 d-filter time for the power controller.						
	0.00 … 100.00	0.01	s	100 = 1 s	n	y	Parameter
23.59	**Leg 1 Power Control Out**						
	Output power controller. Leg 1 output of the power controller in percent of 99.09 Load Power.						
	0.00 … 325.00	-	%	100 = 1 %	y	n	Signal
23.60	**Leg 1 Power Control Out after Current Limit**						
	Output power controller after limit. Leg 1 output of the power controller after applying limit 30.20 Leg 1 Current Limit in percent of 99.09 Load Power.						
	0.00 … 325.00	-	%	100 = 1 %	y	n	Signal
23.65	**Leg 1 External Ref**						
	External reference. Leg 1 external reference in percent: 0 % ≡ 180.0°. 100 % ≡ 0.0°. Valid when 99.10 Leg 1 Control Mode = Leg 1 External Ref 23.65 (= 12).						
	0.00 … 325.00	0.00	%	100 = 1 %	y	y	Parameter
23.66	**Leg 1 Thyristor Control**						
	Thyristor control. Activate/Deactivate thyristors in leg 1. 0: **Both active**; activate both thyristors in leg 1. 1: **Forward blocked**; deactivate the forward thyristor (U1 to U2).						

Index	Name						
	Text						
	Range	**Default**	**Unit**	**Scale FbEq16**	**Volatile**	**Change running**	**Type**
	2: **Reverse blocked**; deactivate the reverse thyristor (U2 to U1).						
	0 … 2	Both active	-	1 = 1	n	y	Parameter
23.67	**Leg 1 Delta Alpha DC Offset**						
	reserved						
	-30.000 … 30.000	0.000	°	1000 = 1°	n	y	Parameter
23.70	**Leg 1 Phase Angle Out**						
	Final alpha reference for Leg 1. Leg 1 final alpha reference in percent: 0 % ≡ 180.0°. 100 % ≡ 0.0°. Valid for the phase angle controls. 99.10 Leg 1 Control Mode = α controls/External Ref 23.65 (= 5 … 12).						
	0.00 … 100.00	-	%	100 = 1 %	y	n	Signal
23.75	**Leg 1 External Voltage Feedback**						
	Actual voltage measured by the overriding control system. Leg 1 actual voltage measured by the overriding control system in percent of 99.03 Load Voltage. Valid when 99.64 Leg 1 Voltage Feedback = External (23.75).						
	0.00 … 325.00	0.00	%	100 = 1 %	y	y	Parameter
23.77	**Leg 1 External Current Feedback**						
	Actual current measured by the overriding control system. Leg 1 actual current measured by the overriding control system in percent of 99.02 Load Current. Valid when 99.74 Leg 1 Current Feedback = External (23.77).						
	0.00 … 325.00	0.00	%	100 = 1 %	y	y	Parameter
23.80	**Leg 1 External Power Feedback**						
	Actual power measured by the overriding control system. Leg 1 actual power measured by the overriding control system in percent of 99.09 Load Power. Valid when 99.84 Leg 1 Power Feedback = External (23.80).						
	0.00 … 325.00	0.00	%	100 = 1 %	y	y	Parameter
23.90	**Leg 1 Firing Pulse Prolonging**						
	Increasing the firing pulse train length. Prolonging the duration of the firing pulse train e.g., for inductive loads.						
	0.0 … 95.0	0.0	°	10 = 1°	n	y	Parameter
23.95	**Leg 1 Control Mode Options**						
	23.95 Leg 1 Control mode options enables additional functions depending on 99.10 Leg 1 Control Mode:						

Bit	Name	High	Low	Remark
0	Full wave half cycle	Active	Inactive	Only for 99.10 Leg 1 Control Mode = Full wave fix cycle (= 2)
1	Fix cycle resolution	Active	Inactive	
2 … 15	reserved			

Full wave half cycle:
If active, 99.10 Leg 1 Control Mode = Full wave fix cycle (= 2) operates using half cycles instead of full cycles.
Fix cycle resolution:
If active, the resolution of 99.10 Leg 1 Control Mode = Full wave fix cycle (= 2) is ‘increased’. Due to the system, the best possible resolution is one full wave (one cycle). If the reference is not inside this resolution, the remaining parts are added up and if they equal a full wave, the full wave is conducted.

	0000h … FFFFh	0000h	-	1 = 1	n	y	Parameter

24 Leg 2 Reference Chain

Description see group 22 Leg 1 Reference Chain.

Index	Name						
	Text						
	Range	**Default**	**Unit**	**Scale FbEq16**	**Volatile**	**Change running**	**Type**
24.46	**reserved**						
	Reserved for PC tool.						
	-325.00 … 325.00	0.00	%	100 = 1 %	n	y	Parameter

25 Leg 2 Control Detailed

Description see group 23 Leg 1 Control Detailed.

26 Leg 3 Reference Chain

Description see group 22 Leg 1 Reference Chain.

Index	Name						
	Text						
	Range	**Default**	**Unit**	**Scale FbEq16**	**Volatile**	**Change running**	**Type**
26.41	**reserved**						
	Reserved for PC tool.						
	-325.00 … 325.00	0.00	%	100 = 1 %	n	y	Parameter
26.42	**reserved**						
	Reserved for PC tool.						
	1 … 2	1		1 = 1	n	y	Parameter

27 Leg 3 Control Detailed

Description see group 23 Leg 1 Control Detailed.

28 Unit Faults

Configuration of external events, selection of behavior of the thyristor power controller upon fault situations.

Index	Name						
	Text						
	Range	**Default**	**Unit**	**Scale FbEq16**	**Volatile**	**Change running**	**Type**
28.01	**External event 1 source**						
	Source of external event 1. Defines the source of external event 1. See 28.02 External event 1 type. The external event is low active, thus: 0 = Trigger event. 1 = Normal operation. **Other [bit]**; source selection. 0: **Active**; trigger event. 1: **Inactive**; no trigger event. Normal operation. 3: **DI1**; 10.02.b00 DI delayed status. 4: **DI2**; 10.02.b01 DI delayed status. 5: **DI3**; 10.02.b02 DI delayed status. 6: **DI4**; 10.02.b03 DI delayed status. 7: **DI5**; 10.02.b04 DI delayed status. 8: **DI6**; 10.02.b05 DI delayed status. 11: **DIO1**; 11.02.b00 DIO delayed status. 12: **DIO2**; 11.02.b01 DIO delayed status. 19: **DIL**; 10.02.b15 DI delayed status.						
	0 … 19	Inactive	-	1 = 1	n	y	Parameter

Index	Name						
	Text						
	Range	**Default**	**Unit**	**Scale FbEq16**	**Volatile**	**Change running**	**Type**
28.02	**External event 1 type**						
	Type of external event 1. Selects the type of external event 1. 0: **Fault**; the event generates fault 5211 External fault 1. 1: **Warning**; the event generates warning 1201 External warning 1. 3: **Warning/Fault**; if the unit is operating, see 06.13 Global Status Word bit 3 = 1, fault 5211 is generated. Otherwise, warning 1201 is generated.						
	0 … 3	Fault	-	1 = 1	n	y	Parameter
28.03	**External event 2 source**						
	Source of external event 2. Defines the source for external event 2. See 28.01 External event 1 source and 28.02 External event 1 type.						
	0 … 19	Inactive	-	1 = 1	n	y	Parameter
28.04	**External event 2 type**						
	Type of external event 2. Selects the type of external event 2. See 28.02 External event 1 type.						
	0 … 3	Fault	-	1 = 1	n	y	Parameter
28.05	**External event 3 source**						
	Source of external event 3. Defines the source for external event 3. See 28.01 External event 1 source and 28.02 External event 1 type.						
	0 … 19	Inactive	-	1 = 1	n	y	Parameter
28.06	**External event 3 type**						
	Type of external event 3. Selects the type of external event 2. See 28.02 External event 1 type.						
	0 … 3	Fault	-	1 = 1	n	y	Parameter
28.07	**External event 4 source**						
	Source of external event 4. Defines the source for external event 4. See 28.01 External event 1 source and 28.02 External event 1 type.						
	0 … 19	Inactive	-	1 = 1	n	y	Parameter
28.08	**External event 4 type**						
	Type of external event 4. Selects the type for external event 4. See 28.02 External event 1 type.						
	0 … 3	Fault	-	1 = 1	n	y	Parameter
28.09	**External event 5 source**						
	Source of external event 5. Defines the source for external event 5. See 28.01 External event 1 source and 28.02 External event 1 type.						
	0 … 19	Inactive	-	1 = 1	n	y	Parameter
28.10	**External event 5 type**						
	Type of external event 5. Selects the type for external event 5. See 28.02 External event 1 type.						
	0 … 3	Fault		1 = 1	n	y	Parameter
28.14	**Ext I/O comm loss event**						
	Extension I/O communication loss action. Selects how the unit reacts to an extension I/O communication loss. 0: **No action**; none, disable communication loss function. 1: **Warning**; the event generates warning A799 Ext I/O comm loss. 2: **Fault**; the event generates fault 5508 Ext I/O comm loss.						

Index	Name						
	Text						
	Range	**Default**	**Unit**	**Scale FbEq16**	**Volatile**	**Change running**	**Type**
	0 … 2	Fault		1 = 1	n	y	Parameter
28.20	**Fault function Leg 2/Leg 3**						
	Follow fault/warning function of leg 1. Selects if the faults/warnings for overcurrent, mains overvoltage and mains undervoltage are set up individually for each leg or if leg 2 and leg 3 follow leg 1. 0: **Follow Leg 1**; the fault/warning parameters settings of leg 1 are also valid for leg 2 and leg 3. Thus, fault/warning parameters settings of leg 2 and leg 3 are invalid. **Attention**: Fault/Warning messages are still active for each leg. E.g., if there is an overcurrent in leg 2, it will be indicated as a Leg 2 overcurrent fault. 1: **Individual**; the fault/warning parameters settings of each leg are active. Thus, the supervision for each leg is working independently.						
	0 … 1	Follow Leg 1	-	1 = 1	n	y	Parameter
28.21	**Leg 1 Overcurrent Fault level**						
	Leg 1 overcurrent fault level. The event generates fault 3101 Leg 1 Overcurrent, if 28.21 Leg 1 Overcurrent Fault level in percent of 99.02 Load Current is exceeded. See description in chapter Fault tracing.						
	0.00 … 325.00	150.00	%	100 = 1 %	n	y	Parameter
28.22	**Leg 1 Overcurrent Warning level**						
	Leg 1 overcurrent warning level. The event generates warning 2101 Leg 1 Overcurrent, if 28.22 Leg 1 Overcurrent Warning level in percent of 99.02 Load Current is exceeded. See description in chapter Fault tracing.						
	0.00 … 325.00	130.00	%	100 = 1 %	n	y	Parameter
28.23	**Leg 2 Overcurrent Fault level**						
	Leg 2 overcurrent fault level. The event generates fault 3201 Leg 2 Overcurrent, if 28.23 Leg 2 Overcurrent Fault level in percent of 99.02 Load Current is exceeded. See description in chapter Fault tracing.						
	0.00 … 325.00	150.00	%	100 = 1 %	n	y	Parameter
28.24	**Leg 2 Overcurrent Warning level**						
	Leg 2 overcurrent warning level. The event generates warning 2201 Leg 2 Overcurrent, if 28.24 Leg 2 Overcurrent Warning level in percent of 99.02 Load Current is exceeded. See description in chapter Fault tracing.						
	0.00 … 325.00	130.00	%	100 = 1 %	n	y	Parameter
28.25	**Leg 3 Overcurrent Fault level**						
	Leg 3 overcurrent fault level. The event generates fault 3301 Leg 3 Overcurrent, if 28.25 Leg 3 Overcurrent Fault level in percent of 99.02 Load Current is exceeded. See description in chapter Fault tracing.						
	0.00 … 325.00	150.00	%	100 = 1 %	n	y	Parameter
28.26	**Leg 3 Overcurrent Warning level**						
	Leg 3 overcurrent warning level. The event generates warning 2301 Leg 3 Overcurrent, if 28.26 Leg 3 Overcurrent Warning level in percent of 99.02 Load Current is exceeded. See description in chapter Fault tracing.						
	0.00 … 325.00	130.00	%	100 = 1 %	n	y	Parameter

Index	Name						
	Text						
	Range	**Default**	**Unit**	**Scale FbEq16**	**Volatile**	**Change running**	**Type**
28.30	**Leg 1 Mains Overvoltage Fault level**						
	Leg 1 overvoltage fault level. The event generates fault 3102 Leg 1 Mains Overvoltage, if 28.30 Leg 1 Overvoltage Fault level in percent of 99.01 Supply Voltage is exceeded. See description in chapter Fault tracing.						
	0.00 … 325.00	150.00	%	100 = 1 %	n	y	Parameter
28.31	**Leg 1 Mains Overvoltage Warning level**						
	Leg 1 overvoltage warning level. The event generates warning 2102 Leg 1 Mains Overvoltage, if 28.31 Leg 1 Overvoltage Warning level in percent of 99.01 Supply Voltage is exceeded. See description in chapter Fault tracing.						
	0.00 … 325.00	130.00	%	100 = 1 %	n	y	Parameter
28.32	**Leg 2 Mains Overvoltage Fault level**						
	Leg 2 overvoltage fault level. The event generates fault 3302 Leg 2 Mains Overvoltage, if 28.32 Leg 2 Overvoltage Fault level in percent of 99.01 Supply Voltage is exceeded. See description in chapter Fault tracing.						
	0.00 … 325.00	150.00	%	100 = 1 %	n	y	Parameter
28.33	**Leg 2 Mains Overvoltage Warning level**						
	Leg 2 overvoltage warning level. The event generates warning 2202 Leg 2 Mains Overvoltage, if 28.33 Leg 2 Overvoltage Warning level in percent of 99.01 Supply Voltage is exceeded. See description in chapter Fault tracing.						
	0.00 … 325.00	130.00	%	100 = 1 %	n	y	Parameter
28.34	**Leg 3 Mains Overvoltage Fault level**						
	Leg 3 overvoltage fault level. The event generates fault 3302 Leg 3 Mains Overvoltage, if 28.34 Leg 3 Overvoltage Fault level in percent of 99.01 Supply Voltage is exceeded. See description in chapter Fault tracing.						
	0.00 … 325.00	150.00	%	100 = 1 %	n	y	Parameter
28.35	**Leg 3 Mains Overvoltage Warning level**						
	Leg 3 overvoltage warning level. The event generates warning 2302 Leg 3 Mains Overvoltage, if 28.35 Leg 3 Overvoltage Warning level in percent of 99.01 Supply Voltage is exceeded. See description in chapter Fault tracing.						
	0.00 … 325.00	130.00	%	100 = 1 %	n	y	Parameter
28.40	**Leg 1 Mains Undervoltage short time Fault level**						
	Leg 1 absolute minimum mains voltage limit. Leg 1 mains undervoltage short time fault level in volts. The event immediately generates fault 3105 Leg 1 Mains Undervoltage, if 28.40 Leg 1 Mains Undervoltage short time Fault level is undercut. **Notes:** – Do not set lower than 80.00 V. – In case the mains contactor is controlled by the overriding control, it might be necessary to suppress the short time mains undervoltage fault. For this set 19.01 Leg 1 Enable Local I/O = Mains ON. See description in chapter Fault tracing.						
	0.0 … 3250.0	80.0	V	10 = 1 V	n	y	Parameter

Index	Name						
	Text						
	Range	**Default**	**Unit**	**Scale FbEq16**	**Volatile**	**Change running**	**Type**
28.41	**Leg 1 Mains Undervoltage Fault level**						
	Leg 1 undervoltage fault level. The event generates fault 3105 Leg 1 Mains Undervoltage, if 28.41 Leg 1 Undervoltage Fault level in percent of 99.01 Supply Voltage is undercut for longer than 28.42 Leg 1 Mains Undervoltage Fault delay time. See description in chapter Fault tracing.						
	0.00 … 325.00	75.00	%	100 = 1 %	n	y	Parameter
28.42	**Leg 1 Mains Undervoltage Fault delay time**						
	Leg 1 mains undervoltage fault delay time. Leg 1 mains undervoltage fault delay time for 28.41 Leg 1 Mains Undervoltage Fault level. See description in chapter Fault tracing.						
	0.0 … 3000.0	2.0	s	10 = 1 s	n	y	Parameter
28.43	**Leg 1 Mains Undervoltage Warning level**						
	Leg 1 undervoltage warning level. The event immediately generates warning 2105 Leg 1 Mains Undervoltage, if 28.43 Leg 1 Undervoltage Warning level in percent of 99.01 Supply Voltage is undercut. See description in chapter Fault tracing.						
	0.00 … 325.00	90.00	%	100 = 1 %	n	y	Parameter
28.44	**Leg 2 Mains Undervoltage short time Fault level**						
	Leg 2 absolute minimum mains voltage limit. Leg 2 mains undervoltage short time fault level in volts. The event immediately generates fault 3205 Leg 2 Mains Undervoltage, if 28.44 Leg 2 Mains Undervoltage short time Fault level is undercut. **Notes:** – Do not set lower than 80.00 V. – In case the mains contactor is controlled by the overriding control, it might be necessary to suppress the short time mains undervoltage fault. For this set 19.03 Leg 2 Enable Local I/O = Mains ON. See description in chapter Fault tracing.						
	0.0 … 3250.0	80.0	V	10 = 1 V	n	y	Parameter
28.45	**Leg 2 Mains Undervoltage Fault level**						
	Leg 2 undervoltage fault level. The event generates fault 3205 Leg 2 Mains Undervoltage, if 28.45 Leg 2 Undervoltage Fault level in percent of 99.01 Supply Voltage is undercut for longer than 28.46 Leg 2 Mains Undervoltage Fault delay time. See description in chapter Fault tracing.						
	0.00 … 325.00	75.00	%	100 = 1 %	n	y	Parameter
28.46	**Leg 2 Mains Undervoltage Fault delay time**						
	Leg 2 mains undervoltage fault delay time. Leg 2 mains undervoltage fault delay time for 28.45 Leg 2 Mains Undervoltage Fault level. See description in chapter Fault tracing.						
	0.0 … 3000.0	2.0	s	10 = 1 s	n	y	Parameter
28.47	**Leg 2 Mains Undervoltage Warning level**						
	Leg 2 undervoltage warning level. The event generates warning 2205 Leg 2 Mains Undervoltage, if 28.47 Leg 2 Undervoltage Warning level in percent of 99.01 Supply Voltage is undercut. See description in chapter Fault tracing.						
	0.00 … 325.00	90.00	%	100 = 1 %	n	y	Parameter

Index	Name						
	Text						
	Range	**Default**	**Unit**	**Scale FbEq16**	**Volatile**	**Change running**	**Type**
28.48	**Leg 3 Mains Undervoltage short time Fault level**						
	Leg 3 absolute minimum mains voltage limit. Leg 3 mains undervoltage short time fault level in volts. The event immediately generates fault 3305 Leg 3 Mains Undervoltage, if 28.48 Leg 3 Mains Undervoltage short time Fault level is undercut. **Notes:** – Do not set lower than 80.00 V. – In case the mains contactor is controlled by the overriding control, it might be necessary to suppress the short time mains undervoltage fault. For this set 19.05 Leg 3 Enable Local I/O = Mains ON. See description in chapter Fault tracing.						
	0.0 … 3250.0	80.0	V	10 = 1 V	n	y	Parameter
28.49	**Leg 3 Mains Undervoltage Fault level**						
	Leg 3 undervoltage fault level. The event generates fault 3305 Leg 3 Mains Undervoltage, if 28.49 Leg 3 Undervoltage Fault level in percent of 99.01 Supply Voltage is undercut for longer than 28.50 Leg 3 Mains Undervoltage Fault delay time. See description in chapter Fault tracing.						
	0.00 … 325.00	75.00	%	100 = 1 %	n	y	Parameter
28.50	**Leg 3 Mains Undervoltage Fault delay time**						
	Leg 3 mains undervoltage fault delay time. Leg 3 mains undervoltage fault delay time for 28.49 Leg 2 Mains Undervoltage Fault level. See description in chapter Fault tracing.						
	0.0 … 3000.0	2.0	s	10 = 1 s	n	y	Parameter
28.51	**Leg 3 Mains Undervoltage Warning level**						
	Leg 3 undervoltage warning level. The event generates warning 2305 Leg 3 Mains Undervoltage, if 28.51 Leg 3 Undervoltage Warning level in percent of 99.01 Supply Voltage is undercut. See description in chapter Fault tracing.						
	0.00 … 325.00	90.00	%	100 = 1 %	n	y	Parameter
28.55	**Thyristor short function**						
	Type of event thyristor short circuit during full wave/burst (99.10 Leg 1 Control Mode = 1 … 3). This function measures the current when the firing angle = 30.41 Leg 1 Alpha Max. During that time, the current should be zero. Selects the type of event thyristor short circuit. 0: **No action**; none, disable event thyristor short circuit. 1: **Warning**; the event generates warning 2103/2203/2303 Leg 1/2/3 Thyristor short circuit. 2: **Fault**; the event generates fault 3103/3203/3303 Leg1/2/3 Thyristor short circuit.						
	0 … 2	Warning	-	1 = 1	n	y	Parameter
28.56	**Thyristor short trip level**						
	Trip level for the thyristor short function during full wave/burst (99.10 Leg 1 Control Mode = 1 … 3). Thyristor short circuit fault level in percent of 99.02 Load Current. In case the measured current exceeds the set level, when the firing angle = 30.41 Leg 1 Alpha Max, the event defined in 28.55 Thyristor short function is executed.						
	0.00 ... 100.00	5.00	%	100 = 1 %	n	y	Parameter
28.72	**STO indication run/stop**						
	reserved Not applicable for DCT. Leave at default. **WARNING** The XSTO terminals must not be used for thyristor power controllers.						

Index	Name						
	Text						
	Range	**Default**	**Unit**	**Scale FbEq16**	**Volatile**	**Change running**	**Type**
	They are not offering any certified safety functionality.						
	0 … 6	Fault/Fault	-	1 = 1	n	n	Parameter
28.90	**XSMC:STO indication**						
	reserved Not applicable for DCT. Leave at default. **WARNING** The XSTO terminals must not be used for thyristor power controllers. They are not offering any certified safety functionality.						
	0 … 2	Fault	-	1 = 1	n	y	Parameter
28.91	**STO status word**						
	reserved Not applicable for DCT. Leave at default. **WARNING** The XSTO terminals must not be used for thyristor power controllers. They are not offering any certified safety functionality.						
	0000h … FFFFh	-	-	1 = 1	y	n	Signal
28.94	**STO time 1**						
	reserved Not applicable for DCT. Leave at default. **WARNING** The XSTO terminals must not be used for thyristor power controllers. They are not offering any certified safety functionality.						
	0 … 65535	-	ms	1 = 1 ms	y	n	Signal
28.95	**STO time 2**						
	reserved Not applicable for DCT. Leave at default. **WARNING** The XSTO terminals must not be used for thyristor power controllers. They are not offering any certified safety functionality.						
	0 … 65535	-	ms	1 = 1 ms	y	n	Signal
28.98	**STO actual status**						
	reserved Not applicable for DCT. Leave at default. **WARNING** The XSTO terminals must not be used for thyristor power controllers. They are not offering any certified safety functionality.						
	0000h … FFFFh	-	-	1 = 1	y	n	Signal
28.99	**STO fault diagnostic**						
	reserved Not applicable for DCT. Leave at default. **WARNING** The XSTO terminals must not be used for thyristor power controllers. They are not offering any certified safety functionality.						
	0000h … FFFFh	-	-	1 = 1	y	n	Signal
28.100	**STO test mode**						
	reserved Not applicable for DCT. Leave at default. **WARNING** The XSTO terminals must not be used for thyristor power controllers. They are not offering any certified safety functionality.						
	0 … 2	None	-	1 = 1	y	y	Parameter

29 Multitap

Configuration when using a transformer with multitaps. See DCT880 Multitap Control Manual (3ADW000440).

Index	Name						
	Text						
	Range	Default	Unit	Scale FbEq16	Volatile	Change running	Type
29.01	Leg 1 Output Voltage relative						
	reserved						
	0.00 … 325.00	33.00	%	100 = 1 %	n	y	Parameter
29.02	Leg 2 Output Voltage relative						
	reserved						
	0.00 … 325.00	67.00	%	100= 1 %	n	y	Parameter
29.03	Leg 3 Output Voltage relative						
	reserved						
	0.00 … 325.00	100.00	%	100 = 1 %	n	y	Parameter

30 Leg 1 Limits

Thyristor power controller operation limits.

Index	Name						
	Text						
	Range	Default	Unit	Scale FbEq16	Volatile	Change running	Type

Leg 1 limits:

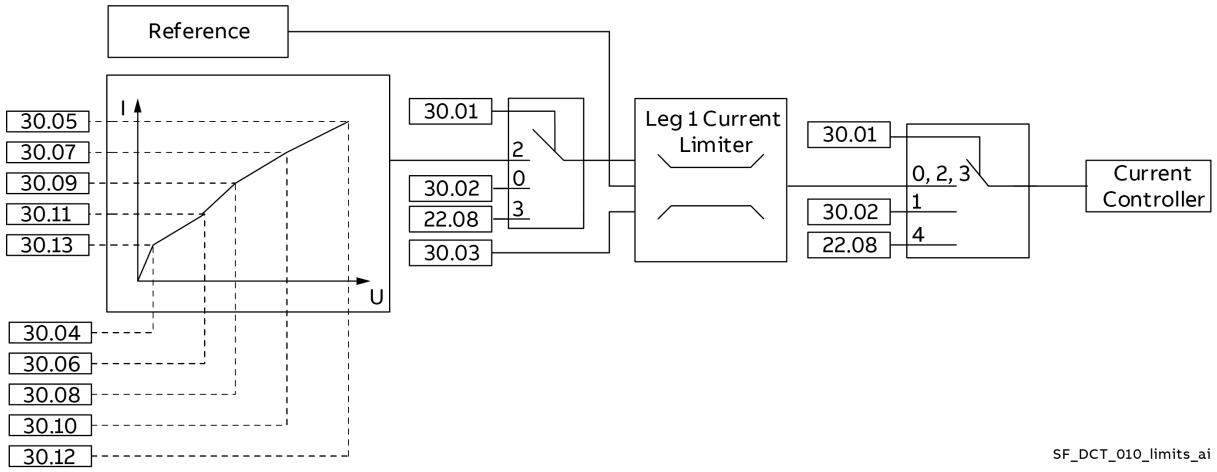

30.01	Leg 1 Current Limiter Mode
	Leg 1 current limiter operation mode. 0: **Fix (30.02)**; fixed limits. 30.02 Leg 1 Current Limit Max and 30.03 Leg 1 Current Limit Min are used. 1: **Auto (current controller)**; uses value of 30.02 Leg 1 Current Limit Max as reference for the current controller. This releases the current controller working as current limiter for 99.10 Leg 1 Control Mode = 1 … 6 and 9 … 12, when 30.20 Leg 1 Current Limiters = Enable. 2: **By voltage**; 30.02 Leg 1 Current Limit Max is set depending on the load voltage using parameters 30.04 … 30.13. 3: **Ref channel B (22.08)**; 22.08 Leg 1 Cha B Sum Ref after limit is used as current limiter for leg 1. 4: **Auto/RefChB (current controller/22.08)**; uses value of 22.08 Leg 1 Cha B Sum Ref after limit as reference for the current controller. This releases the current controller working as current limiter for 99.10 Leg 1 Control Mode = 1 … 6 and 9 … 12, when 30.20 Leg 1 Current Limiters = Enable.

Index	Name						
	Text						
	Range	**Default**	**Unit**	**Scale FbEq16**	**Volatile**	**Change running**	**Type**
	Example: 99.10 Leg 1 Control Mode = U α open loop control (5). Thus, the current is normally dependent on the load resistance. After the load current reaches the limit defined by 22.08 Leg 1 Cha B Sum Ref after limit, the current controller follows the selected reference via channel B.						
	0 … 4	Fix (30.02)	-	1 = 1	n	y	Parameter
30.02	**Leg 1 Current Limit Max**						
	Leg 1 upper current reference limit. Leg 1 upper current reference limit in percent of 99.02 Load Current.						
	0.00 … 325.00	325.00	%	100 = 1 %	n	y	Parameter
30.03	**Leg 1 Current Limit Min**						
	Leg 1 lower current reference limit. Leg 1 lower current reference limit in percent of 99.02 Load Current.						
	0.00 … 325.00	0.00	%	100 = 1 %	n	y	Parameter
30.04	**Leg 1 Current Limit Voltage 1**						
	Leg 1 voltage depending current reference limit. First U axis-supporting point in percent of 99.03 Load Voltage.						
	0.00 … 325.00	20.00	%	100 = 1 %	n	y	Parameter
30.05	**Leg 1 Current Limit Level 1**						
	Leg 1 voltage depending current reference limit. First I axis-supporting point in percent of 99.02 Load Current.						
	0.00 … 325.00	20.00	%	100 = 1 %	n	y	Parameter
30.06	**Leg 1 Current Limit Voltage 2**						
	Leg 1 voltage depending current reference limit. Second U axis-supporting point in percent of 99.03 Load Voltage.						
	0.00 … 325.00	40.00	%	100 = 1 %	n	y	Parameter
30.07	**Leg 1 Current Limit Level 2**						
	Leg 1 voltage depending current reference limit. Second I axis-supporting point in percent of 99.02 Load Current.						
	0.00 … 325.00	40.00	%	100 = 1 %	n	y	Parameter
30.08	**Leg 1 Current Limit Voltage 3**						
	Leg 1 voltage depending current reference limit. Third U axis-supporting point in percent of 99.03 Load Voltage.						
	0.00 … 325.00	60.00	%	100 = 1 %	n	y	Parameter
30.09	**Leg 1 Current Limit Level 3**						
	Leg 1 voltage depending current reference limit. Third I axis-supporting point in percent of 99.02 Load Current.						
	0.00 … 325.00	60.00	%	100 = 1 %	n	y	Parameter
30.10	**Leg 1 Current Limit Voltage 4**						
	Leg 1 voltage depending current reference limit. 4th U axis-supporting point in percent of 99.03 Load Voltage.						
	0.00 … 325.00	80.00	%	100 = 1 %	n	y	Parameter
30.11	**Leg 1 Current Limit Level 4**						
	Leg 1 voltage depending current reference limit. 4th I axis-supporting point in percent of 99.02 Load Current.						
	0.00 … 325.00	80.00	%	100 = 1 %	n	y	Parameter
30.12	**Leg 1 Current Limit Voltage 5**						
	Leg 1 voltage depending current reference limit. 5th U axis-supporting point in percent of 99.03 Load Voltage.						
	0.00 … 325.00	100.00	%	100 = 1 %	n	y	Parameter

Index	Name						
	Text						
	Range	Default	Unit	Scale FbEq16	Volatile	Change running	Type
30.13	**Leg 1 Current Limit Level 5**						
	Leg 1 voltage depending current reference limit. 5th I axis-supporting point in percent of 99.02 Load Current.						
	0.00 … 325.00	100.00	%	100 = 1 %	n	y	Parameter
30.15	**Leg 1 Alpha min Current Controller**						
	Output of the current controller after the arccosine for 99.10 Leg 1 Control Mode = full wave (burst)/half wave (= 1 … 4). See 30.20 Leg 1 Current Limit.						
	0.0 … 180.0	-	°	10 = 1°	y	n	Signal
30.20	**Leg 1 Current Limiters**						
	Enable/Disable the upper current limit for 99.10 Leg 1 Control Mode = 1 … 6 and 9 … 11. This is all control modes except External reference (= 12), I α control and I^2 α control (= 7 and 8). 0: **Disable**; disable the current limiters. 1: **Enable**; enable the current limiters.						
	0 … 1	Disable	-	1 = 1	n	y	Parameter
30.21	**Leg 1 Voltage Limit Max**						
	Leg 1 upper voltage reference limit. Leg 1 upper voltage reference limit in percent of 99.03 Load Voltage.						
	0.00 … 325.00	325.00	%	100 = 1 %	n	y	Parameter
30.22	**Leg 1 Voltage Limit Min**						
	Leg 1 lower voltage reference limit. Leg 1 lower voltage reference limit in percent of 99.03 Load Voltage.						
	0.00 … 325.00	0.00	%	100 = 1 %	n	y	Parameter
30.31	**Leg 1 Power Limit Max**						
	Leg 1 upper power reference limit. Leg 1 upper power reference limit in percent of 99.09 Load Power.						
	0.00 … 325.00	325.00	%	100 = 1 %	n	y	Parameter
30.32	**Leg 1 Power Limit Min**						
	Leg 1 lower power reference limit. Leg 1 lower power reference limit in percent of 99.09 Load Power.						
	0.00 … 325.00	0.00	%	100 = 1 %	n	y	Parameter
30.40	**Leg 1 Alpha Min**						
	Leg 1 minimum α limit. Leg 1 minimum firing angle in degrees. Thus, maximum load voltage.						
	0.0 … 180.0	0.0	°	10 = 1°	n	y	Parameter
30.41	**Leg 1 Alpha Max**						
	Leg 1 maximum α limit. Leg 1 maximum firing angle in degrees. Thus, minimum load voltage.						
	0.0 … 180.0	180.0	°	10 = 1°	n	y	Parameter

31 Leg 2 Limits

Description see Group 30 Leg 1 Limits.

32 Leg 3 Limits

Description see Group 30 Leg 1 Limits.

33 Generic timer & counter

Configuration of maintenance timers/counters.

Index	Name						
	Text						
	Range	Default	Unit	Scale FbEq16	Volatile	Change running	Type
33.01 … 33.65	reserved						
	reserved						

35 Temperature Measurement

Temperature measurement channel 1 … 4 configuration.

Index	Name						
	Text						
	Range	Default	Unit	Scale FbEq16	Volatile	Change running	Type
Temperature measurement channel 1 overview:							

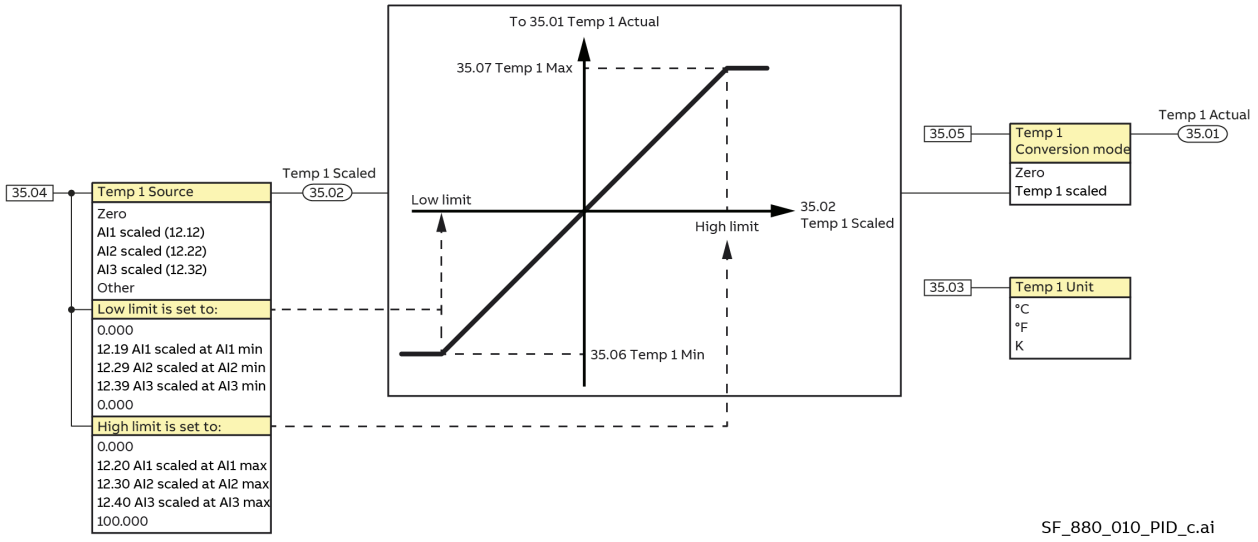

35.01	**Temp 1 Actual**						
	Temperature measurement actual temperature 1. Displays the actual temperature of channel 1 defined by 35.05 Temp 1 Conversion mode. Is also used for events temperature 1 warning/fault. See parameters 35.10 … 35.14.						
	-50.0 … 2000.0°C, -60.0 … 4000.0°F or 0.0 … 2300.0 K	-	See 35.03	10 = 1 (35.03)	y	n	Signal
35.02	**Temp 1 Scaled**						
	Temperature measurement scaled temperature 1. Displays the scaled temperature value of channel 1 selected by 35.04 Temp 1 Source.						
	-32768.000 … 32767.000	-	-	1 = 1	y	n	Signal
35.03	**Temp 1 Unit**						
	Temperature measurement unit selection temperature 1. Defines the unit for signals/parameters 35.01, 35.06, 35.07, 35.11, 35.12 and 35.14. 150: **°C**; degree Celsius. 151: **°F**; degree Fahrenheit. 152: **K**; Kelvin.						
	150 … 152	°C	-	1 = 1	n	y	Parameter

Index	Name						
	Text						
	Range	Default	Unit	Scale FbEq16	Volatile	Change running	Type
35.04	**Temp 1 Source**						
	Temperature measurement source for scaled temperature 1. Selects the source of temperature measurement channel 1 connected to the scaling. Additionally, the scaling of low and high limit from the chosen analog input signal are selected. **Other**; source selection 0: **Zero**; output is set to zero. 1: **AI1 scaled (12.12)**; the temperature measurement source is connected to analog input AI1. 2: **AI2 scaled (12.22)**; the temperature measurement source is connected to analog input AI2. 3: **AI2 scaled (12.32)**; the temperature measurement source is connected to analog input AI3. 4: **XENC:5-6-7**; the temperature measurement source is connected to XENC:5-6-7. See chapter XENC: Temperature measurement.						

35.04 Temp 1 Source	Scaling value/parameter for the low limit	Scaling value/parameter for the high limit
Other; source selection	0.000	100.000
0: **Zero**; output is set to zero	0.000	0.000
1: **AI1 scaled (12.12)**	12.19 AI1 scaled at AI1 min	12.20 AI1 scaled at AI1 max
2: **AI2 scaled (12.22)**	12.29 AI2 scaled at AI2 min	12.30 AI2 scaled at AI2 max
3: **AI3 scaled (12.32)**	12.39 AI3 scaled at AI3 min	12.40 AI3 scaled at AI3 max
4: **XENC:5-6-7**	Autoscaling, no setting needed.	Autoscaling, no setting needed.

	0 … 4	Zero	-	1 = 1	n	y	Parameter
35.05	**Temp 1 Conversion mode**						
	Temperature measurement conversion mode temperature 1. Selects the source of temperature measurement channel 1. 0: **Zero**; output is set to zero. 1: **Temp signal converter**; the temperature is selected by 35.04 Temp 1 Source = AI1 scaled (12.12) ... AI3 scaled (12.32) and scaled via 35.06 Temp 1 Min and 35.07 Temp 1 Max. 2: **XENC:5-6-7**; the temperature is selected by 35.04 Temp 1 Source = XENC:5-6-7 and scaled automatically, because only 3-wire PT100 are allowed to be used. See chapter XENC: Temperature measurement.						
	0 … 1	Zero	-	1 = 1	n	y	Parameter
35.06	**Temp 1 Min**						
	Temperature measurement minimum value temperature 1. Defines the minimum input value for the temperature measurement channel 1 in °C, °F or K, depending on 35.03 Temp 1 Unit. Scaling values/parameters, depending on setting of 35.04 Temp 1 Source (see table below), set the low and high limit of the scaled temperature, the result can be seen in 35.02 Temp 1 Scaled.						

35.04 Temp 1 Source	Scaling value/parameter for the low limit	Scaling value/parameter for the high limit
Other; source selection	0.000	100.000
0: **Zero**; output is set to zero	0.000	0.000
1: **AI1 scaled (12.12)**	12.19 AI1 scaled at AI1 min	12.20 AI1 scaled at AI1 max
2: **AI2 scaled (12.22)**	12.29 AI2 scaled at AI2 min	12.30 AI2 scaled at AI2 max
3: **AI3 scaled (12.32)**	12.39 AI3 scaled at AI3 min	12.40 AI3 scaled at AI3 max
4: **XENC:5-6-7**	Autoscaling, no setting needed.	Autoscaling, no setting needed.

Index	Name						
	Text						
	Range	**Default**	**Unit**	**Scale FbEq16**	**Volatile**	**Change running**	**Type**
	Parameters 35.06 and 35.07 define the temperature values that correspond to these limits as follows: 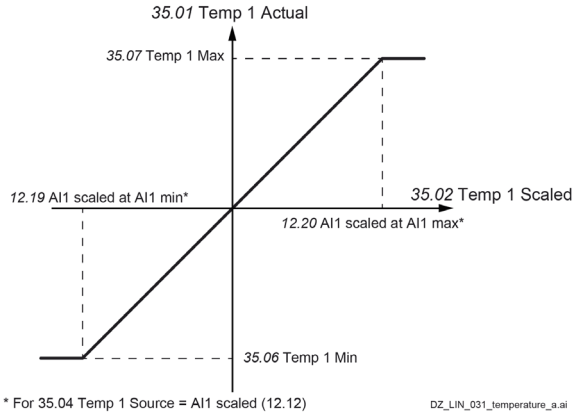 						
	-50.0 … 2000.0°C, -60.0 … 4000.0°F or 0.0 … 2300.0 K	0.0°C, 32.0°F or 273.2 K	See 35.03	10 = 1 (35.03)	n	y	Parameter
35.07	**Temp 1 Max**						
	Temperature measurement maximum value temperature 1. Defines the maximum input value for the temperature measurement channel 1 in °C, °F or K, depending on 35.03 Temp 1 Unit. See 35.06 Temp 1 min.						
	-50.0 … 2000.0°C, -60.0 … 4000.0°F or 0.0 … 2300.0 K	250.0°C, 482.0°F or 523.2 K	See 35.03	10 = 1 (35.03)	n	y	Parameter
35.08	**Temp 1 Offset**						
	reserved						
	-0.100 … 0.100	0.000	V	1000 = 1 V	n	y	Parameter
35.09	**Temp 1 Measurement current**						
	reserved						
	0.00 … 20.00	0.00	mA	100 = 1 mA	n	y	Parameter
35.10	**Temp 1 warning function**						
	Type of event temperature 1 warning. Selects the type of event temperature 1 warning. 0: **No reaction**; none, disable temperature 1 warning. 1: **Warning (greater than)**; the event generates warning 1101 Temperature 1 warning. When 35.01 Temp 1 Actual exceeds 35.11 Temp 1 warning level. 2: **Warning (less than)**; the event generates warning 1101 Temperature 1 warning. When 35.01 Temp 1 Actual undercuts 35.11 Temp 1 warning level.						
	0 ... 2	No reaction	-	1 = 1	n	y	Parameter
35.11	**Temp 1 warning level**						
	Warning level for temperature 1 warning. Defines the warning level for temperature 1 warning function. When 35.01 Temp 1 Actual exceeds/undercuts 35.11 Temp 1 warning level, the event generates warning 1101 Temperature 1 warning. See 35.10 Temp 1 warning function.						
	-50.0 … 2000.0°C, -60.0 … 4000.0°F or 0.0 … 2300.0 K	250.0°C, 482.0°F or 523.2 K	See 35.03	10 = 1 (35.03)	n	y	Parameter

Index	Name						
	Text						
	Range	**Default**	**Unit**	**Scale FbEq16**	**Volatile**	**Change running**	**Type**
35.12	**Temp 1 warning hysteresis**						
	Hysteresis for temperature 1 warning.						
	0.0 ... 50.0°C 0.0 ... 90.0°F 0.0 ... 50.0 K	10.0°C 18°F 10.0 K	See 35.03	10 = 1 (35.03)	n	y	Parameter
35.13	**Temp 1 fault function**						
	Type of event temperature 1 fault. Selects the type of event temperature 1 fault. 0: **No reaction**; none, disable temperature 1 fault. 1: **Fault (greater than)**; the event generates fault 5201 Temperature 1 fault. When 35.01 Temp 1 Actual exceeds 35.14 Temp 1 fault level. 2: **Fault (less than)**; the event generates fault 5201 Temperature 1 fault. When 35.01 Temp 1 Actual undercuts 35.14 Temp 1 fault level.						
	0 ... 2	No reaction	-	1 = 1	n	y	Parameter
35.14	**Temp 1 fault level**						
	Fault level for temperature 1 fault. Defines the fault level for temperature 1 fault function. When 35.01 Temp 1 Actual exceeds/undercuts 35.14 Temp 1 fault level, the event generates fault 5201 Temperature 1 fault. See 35.13 Temp 1 fault function.						
	-50.0 … 2000.0°C, -60.0 … 4000.0°F or 0.0 … 2300.0 K	250.0°C, 482.0°F or 523.2 K	See 35.03	10 = 1 (35.03)	n	y	Parameter
35.21 … 35.29	**Temperature measurement channel 2.**						
	See 35.01 Temp 1 Actual … 35.09 Temp 1 Measurement current.						
35.41 … 35.49	**Temperature measurement channel 3.**						
	See 35.01 Temp 1 Actual … 35.09 Temp 1 Measurement current.						
35.61 … 35.69	**Temperature measurement channel 4.**						
	See 35.01 Temp 1 Actual … 35.09 Temp 1 Measurement current.						

36 Leg 1 Load monitoring

Load resistance measurement, load loss function and overload function.

Index	Name						
	Text						
	Range	**Default**	**Unit**	**Scale FbEq16**	**Volatile**	**Change running**	**Type**
36.01	**Leg 1 Resistance actual**						
	Leg 1 resistance. Leg 1 calculated actual resistance. For the calculation, RMS load current and RMS load voltage are used and adapted by 99.05 Load Configuration.						
	0.00 … 1000.00	-	Ohm	10 = 1 ohm	y	n	Signal

Index	Name						
	Text						
	Range	**Default**	**Unit**	**Scale FbEq16**	**Volatile**	**Change running**	**Type**
36.02	**3ph Resistance actual**						
	3-phase resistance. 3-phase calculated actual resistance. For the calculation, all three RMS load currents and all three RMS load voltages are used and adapted by 99.05 Load Configuration. **Note**: There is no equivalent signal in groups 37 and 38.						
	0.00 … 1000.00	-	Ohm	10 = 1 Ohm	y	n	Signal
36.03	**3ph Load Unbalance**						
	3-phase load unbalance. 36.03 3ph Load Unbalance shows the actual load current imbalance in symmetrical 3-phase load configurations. See 99.05 Load Configuration. The highest and lowest load current are taken, and the difference is shown. **Note**: There is no equivalent signal in groups 37 and 38.						
	-325.00 ... 325.00	-	%	100 = 1 %	y	n	Signal
36.10	**Leg 1 Load Loss Function**						
	Type of event leg 1 load loss. Selects the type of event leg 1 load loss for e.g., defective loads, high ohmic loads. The detection is based on RMS load current and RMS load voltage for the last positive or negative half-wave of the mains voltage. In case of total load failure, still a load voltage is measured, but the load current is equal or close to zero. **Note**: This method might not indicate the failed load accurately for all load configurations (e.g., closed delta configuration for 3-phase loads). Additional detection methods are not possible for references close to 0. 0: **No reaction**; none, disable event leg 1 load loss. 1: **Warning**; warning 2151 Leg 1 Load Loss is generated. 2: **Fault**; fault 3151 Leg 1 Load Loss is generated.						
	0 … 2	No reaction	-	1 = 1	n	y	Parameter
36.11	**Leg 1 Load Loss activation time**						
	Leg 1 load loss start time. Delay time after a Run signal is given until the monitoring of event leg 1 load loss is activated.						
	0.01 … 300.00	1.00	s	100 = 1 s	n	y	Parameter
36.12	**Leg 1 Load Loss Current level**						
	Leg 1 load loss current level. Sets leg 1 load loss current level in percent of 99.02 Load Current. Exceeding the level activates event leg 1 load loss.						

Index	Name						
	Text						
	Range	**Default**	**Unit**	**Scale FbEq16**	**Volatile**	**Change running**	**Type**
	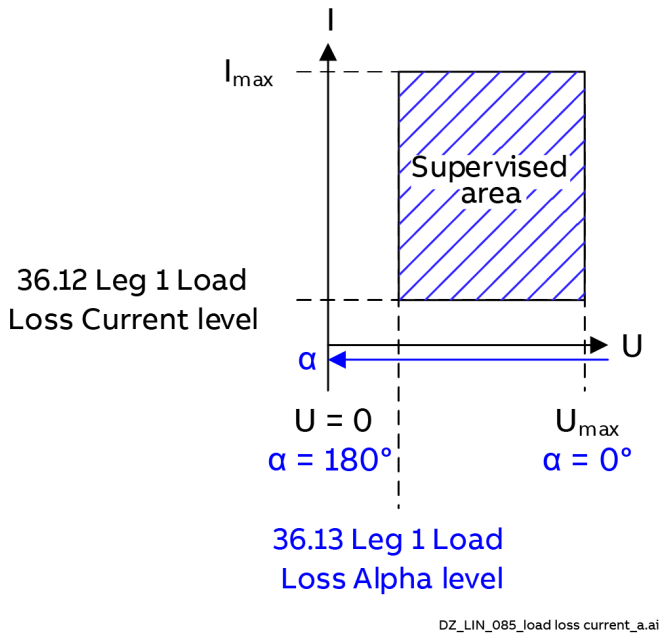						
	0.00 … 325.00	10.00	%	100 = 1 %	n	y	Parameter
36.13	**Leg 1 Load Loss Alpha level**						
	Leg 1 load loss alpha (firing angle) level. Sets the alpha level to activate event leg 1 load loss function. Alpha values smaller than 36.13 Leg 1 Load Loss Alpha level activate the load loss function. See 36.12 Leg 1 Load Loss Current level.						
	0.0 … 180.0	120.0	°	10 = 1°	n	y	Parameter
36.15	reserved						
36.16	reserved						
36.20	**Leg 1 Partial Load Loss Function**						
	Type of event leg 1 partial load loss. Selects the type of event leg 1 partial load loss for e.g., increased ohmic values. This function detects a static increase in load resistance by comparing 36.41 Leg 1 Initial resistance with the actual measured load resistance, see 36.01 Leg 1 Resistance actual. The threshold of event leg 1 partial load loss can be set using 36.22 Leg 1 Partial Load Loss level. 0: **No reaction**; none, disable event leg 1 partial load loss. 1: **Warning**; warning 2152 Leg 1 Partial Load Loss is generated. 2: **Fault**; fault 3152 Leg 1 Partial Load Loss is generated.						
	0 … 2	No reaction	-	1 = 1	n	y	Parameter
36.21	**Leg 1 Partial Load Loss activation time**						
	Leg 1 partial load loss start time. Delay time after a Run signal is given until the monitoring of event leg 1 partial load loss is activated.						
	0.01 … 300.00	1.00	s	100 = 1 %	n	y	Parameter

Index	Name						
	Text						
	Range	**Default**	**Unit**	**Scale FbEq16**	**Volatile**	**Change running**	**Type**
36.22	**Leg 1 Partial Load Loss level**						
	Leg 1 partial load loss level. Level for event leg 1 partial load loss in percent of 36.41 Leg 1 Initial resistance. Recommended threshold settings for resistance fault detection (all -10 %):						

Parallel elements	**99.05 Load Configuration**				
	3 x 1ph loads	**3ph star (3S)**	**3ph delta (3D)**	**3ph star + N (4S)**	**3ph open delta UV/UW (6D)**
2	200 %	167 %	122 %	200 %	200 %
3	150 %	133 %	111 %	150 %	150 %
4	133 %	122 %	107 %	133 %	133 %
5	126 %	117 %	-	126 %	126 %
6	120 %	113 %	-	120 %	120 %

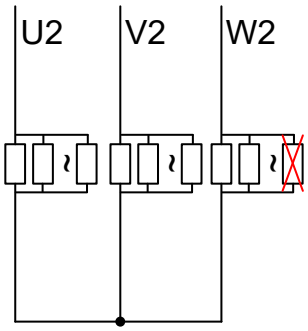

	0.00 … 325.00	110.00	%	100 = 1 %	n	y	Parameter
36.23	**Leg 1 Partial Load Loss delay time**						
	Leg 1 partial load loss delay time. Delay time of event leg 1 partial load loss after the conditions are met.						
	0.0 … 3000.0	1.0	s	10 = 1 s	n	y	Parameter
36.25	**Leg 1 Partial Load Short Function**						
	Type of event leg 1 partial load short circuit. Selects the type of event leg 1 partial load short circuit for e.g., decreased ohmic values. This function detects a static decrease in load resistance by comparing 36.41 Leg 1 Initial resistance with the actual measured load resistance, see 36.01 Leg 1 Resistance actual. The threshold of the partial load short circuit can be set using 36.27 Leg 1 Partial Load Short level. 0: **No reaction**; none, disable event leg 1 partial load short circuit. 1: **Warning**; warning 2153 Leg 1 Partial Load Short Circuit is generated. 2: **Fault**; fault 3153 Leg 1 Partial Load Short Circuit is generated.						
	0 … 2	No reaction	-	1 = 1	n	y	Parameter
36.26	**Leg 1 Partial Load Short activation time**						
	Leg 1 partial load short circuit start time. Delay time after a Run signal is given until the monitoring of event leg 1 partial load short circuit is activated.						
	0.01 … 300.00	1.00	s	100 = 1 s	n	y	Parameter

Index	Name						
	Text						
	Range	**Default**	**Unit**	**Scale FbEq16**	**Volatile**	**Change running**	**Type**
36.27	**Leg 1 Partial Load Short level**						
	Leg 1 partial load short circuit level. Level for event leg 1 partial load short circuit in percent of 36.41 Leg 1 Initial resistance. Recommended threshold settings for resistance fault detection (all +10 %):						

Serial elements	**99.05 Load Configuration**				
	3 x 1ph loads	**3ph star (3S)**	**3ph delta (3D)**	**3ph star + N (4S)**	**3ph open delta UV/UW (6D)**
2	50 %	67 %	80 %	50 %	50 %
3	67 %	78 %	90 %	67 %	67 %
4	75 %	83 %	93 %	75 %	75 %
5	80 %	87 %	-	80 %	80 %
6	83 %	89 %	-	83 %	83 %

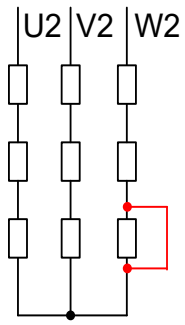

	0.00 … 325.00	90.00	%	100 = 1 %	n	y	Parameter
36.28	**Leg 1 Partial Load Short delay time**						
	Leg 1 partial load short circuit delay time. Delay time of event leg 1 partial load short circuit after the conditions are met.						
	0.0 … 3000.0	1.0	s	10 = 1 s	n	y	Parameter
36.30	**Leg 1 Load Overload Function**						
	Type of event leg 1 load overload. Selects the type of event leg 1 load overload. If leg 1 actual current, see 01.33 Leg 1 Current RMS relative actual, exceeds the current and the time set by 36.31 Leg 1 Load Overload level and 36.32 Leg 1 Load Overload time event leg 1 load overload is generated. 0: **No reaction**; none, disable event leg 1 partial load overload. 1: **Warning**; warning 2155 Leg 1 Load Overload is generated. 2: **Fault**; fault 3155 Leg 1 Load Overload is generated.						
	0 … 2	No reaction	-	1 = 1	n	y	Parameter
36.31	**Leg 1 Load Overload level**						
	Leg 1 load overload level. Sets leg 1 load overload level in percent of 99.02 Load Current. Exceeding the level activates event leg 1 load overload.						
	0.00 … 325.00	110.00	%	100 = 1 %	n	y	Parameter

Index	Name						
	Text						
	Range	**Default**	**Unit**	**Scale FbEq16**	**Volatile**	**Change running**	**Type**
36.32	**Leg 1 Load Overload time**						
	Leg 1 load overload delay time. Delay time of event leg 1 load overload after the conditions are met.						
	0.0 … 3000.0	10.0	s	10 = 1 s	n	y	Parameter
36.35	**Leg 1 Unit Overload Function**						
	Type of event leg 1 unit thermal overload. Selects the type of event leg 1 unit thermal overload. If leg 1 actual current, see 01.30 Leg 1 Current RMS actual, exceeds the units rated current, see 07.17 Unit output current scaling set, by 36.36 Leg 1 Unit Overload level for the time in 36.37 Leg 1 Unit Overload time event is leg 1 unit thermal overload generated. 0: **No reaction**; none, disable event leg 1 unit thermal overload. 1: **Warning**; warning 2154 Leg 1 Unit Thermal Overload is generated. 2: **Fault**; fault 3154 Leg 1 Unit Thermal Overload is generated.						
	0 … 2	No reaction	-	1 = 1	n	y	Parameter
36.36	**Leg 1 Unit Overload level**						
	Leg 1 unit thermal overload level. Sets leg 1 unit thermal overload level in percent of 07.17 Unit output current scaling set. Exceeding the level activates event leg 1 unit thermal overload.						
	0.00 … 325.00	110.00	%	100 = 1 %	n	y	Parameter
36.37	**Leg 1 Unit Overload time**						
	Leg 1 unit thermal overload delay time. Delay time of event leg 1 unit thermal overload after the conditions are met.						
	0.0 … 3000.0	10.0	s	10 = 1 s	n	y	Parameter
36.40	**Leg 1 Resistance Change Function**						
	Type of event leg 1 load aging. Selects the type of event leg 1 load aging. If leg 1 resistance is outside the dead band of 36.41 Leg 1 Initial resistance ± 36.42 Leg 1 Resistance change level event leg 1 load aging is generated. Leg 1 resistance is shown in either 36.01 Leg 1 Resistance actual or 36.02 3ph Resistance actual depending on 99.05 Load Configuration. 0: **No reaction**; none, disable event leg 1 load aging. 1: **Warning**; warning 2157 Leg 1 Load Aging is generated. 2: **Fault**; fault 3157 Leg 1 Load Aging is generated.						
	0 … 2	No reaction	-	1 = 1	n	y	Parameter
36.41	**Leg 1 Initial resistance**						
	Leg 1 resistance change, initial resistance for the load monitoring. Leg 1 initial resistance is either set manually by the user or automatically by means of 36.43 Leg 1 initial resistance teach in.						
	0.00 … 1000.00	0.00	Ohm	10 = 1 Ohm	n	y	Parameter
36.42	**Leg 1 Resistance change level**						
	Leg 1 resistance change level. Sets leg 1 resistance change level in percent of 36.41 Leg 1 Initial resistance. Exceeding/Undercutting the level activates event leg 1 load aging.						
	-325.00 … 325.00	10.00	%	100 = 1 %	n	y	Parameter

Index	Name						
	Text						
	Range	**Default**	**Unit**	**Scale FbEq16**	**Volatile**	**Change running**	**Type**
36.43	**Leg 1 Initial resistance teach-in**						
	Leg 1 resistance change, teach-in. Copies the value from 36.01 Leg 1 Resistance actual to 36.41 Leg 1 Initial resistance. The teach-in must only be started when the load is at operating temperature. 0: **Done**; teach-in done or not requested. 1: **Teach-in**; activates the teach-in. The value reverts automatically to Done when the teach-in is done.						
	0 … 1	Done	-	1 = 1	y	y	Parameter
36.44	**Leg 1 Resistance Change activation time**						
	Leg 1 resistance change start time. Delay time after a Run signal is given until the monitoring of event leg 1 resistance change is activated.						
	0.01 … 300.00	1.00	s	100 = 1 s	n	y	Parameter
35.45	**Leg 1 Resistance Change delay time**						
	Leg 1 resistance change delay time. Delay time of event leg 1 resistance change after the conditions are met.						
	0.1 … 300.0	1.0	s	10 = 1 s	n	y	Parameter
36.50	**Load Current Imbalance Function**						
	Type of events leg1/2/3 load current imbalance. Selects the type of events leg1/2/3 load current imbalance. This function detects a load current imbalance in symmetrical 3-phase load configurations. See 99.05 Load Configuration. The highest and lowest load current are compared. If the difference reaches the value set in 36.52 Load Current Imbalance level one of the events leg1/2/3 load current imbalance is generated. See 36.03 3ph Load Unbalance. 0: **No reaction**; none, disable events leg1/2/3 load current imbalance. 1: **Warning**; warning 2158/2258/2358 Leg 1/2/3 Load Current Imbalance is generated. 2: **Fault**; fault 3158/3258/3358 Leg 1/2/3 Load Current Imbalance is generated. **Note**: There is no equivalent signal in groups 37 and 38.						
	0 … 2	No reaction	-	1 = 1	n	y	Parameter
36.51	**Load Current Imbalance activation time**						
	Leg 1/2/3 load current imbalance start time. Delay time after a Run signal is given until the monitoring of event leg 1/2/3 load current imbalance is activated. **Note**: There is no equivalent signal in groups 37 and 38.						
	0.01 … 300.00	1.00	s	100 = 1 s	n	y	Parameter
36.52	**Load Current Imbalance level**						
	Leg 1/2/3 load current imbalance level. Sets leg 1/2/3 load current imbalance level in percent of 99.02 Load Current. Exceeding the level activates event leg 1/2/3 load current imbalance. Recommended settings are 5 % … 50 %. **Note**: There is no equivalent signal in groups 37 and 38.						
	0.00 … 325.00	50.00	%	100 = 1 s	n	y	Parameter
36.53	**Load Current Imbalance delay time**						
	Leg 1/2/3 load current imbalance delay time. Delay time of event leg 1/2/3 load current imbalance after the conditions are met. **Note**: There is no equivalent signal in groups 37 and 38.						

Index	Name						
	Text						
	Range	Default	Unit	Scale FbEq16	Volatile	Change running	Type
	0.0 … 3000.0	1.0	s	10 = 1 s	n	y	Parameter

37 Leg 2 Load monitoring

Description see group 36 leg 1 Load monitoring.

38 Leg 3 Load monitoring

Description see group 36 leg 1 Load monitoring.

41 Process PID set 1

Parameter values for process PID 1 controller.

Index	Name						
	Text						
	Range	Default	Unit	Scale FbEq16	Volatile	Change running	Type

Process PID 1 controller input selection:

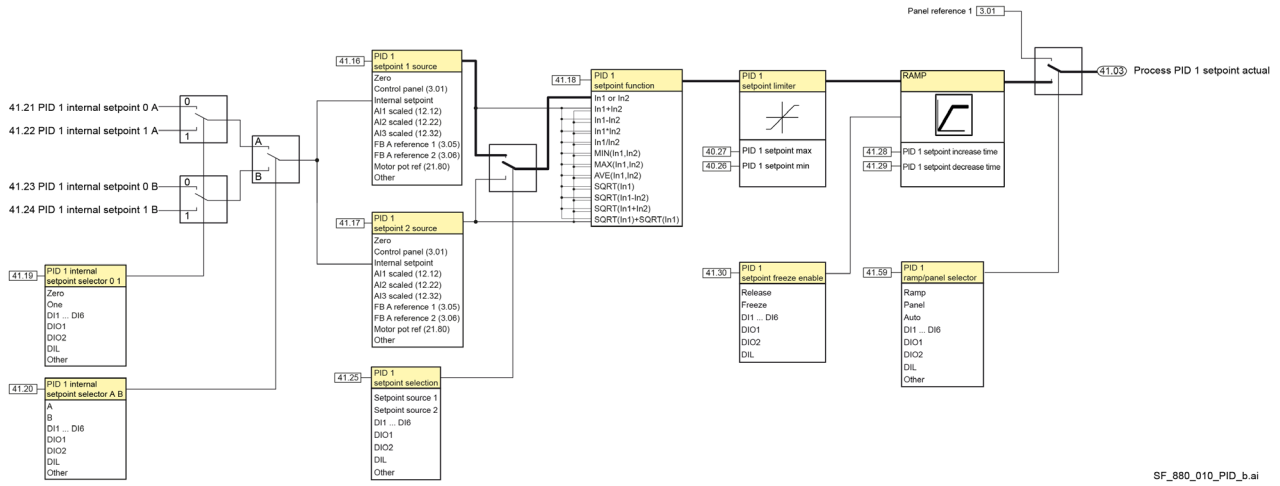

Process PID 1 controller function:

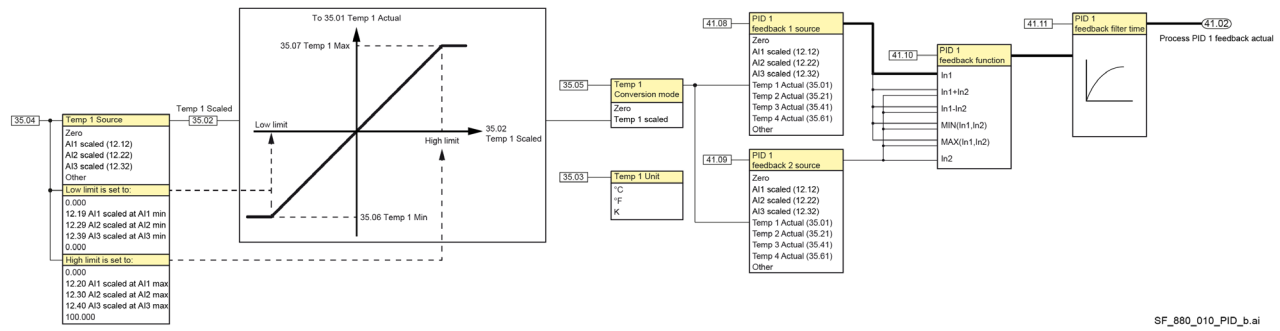

Index	Name						
	Text						
	Range	Default	Unit	Scale FbEq16	Volatile	Change running	Type

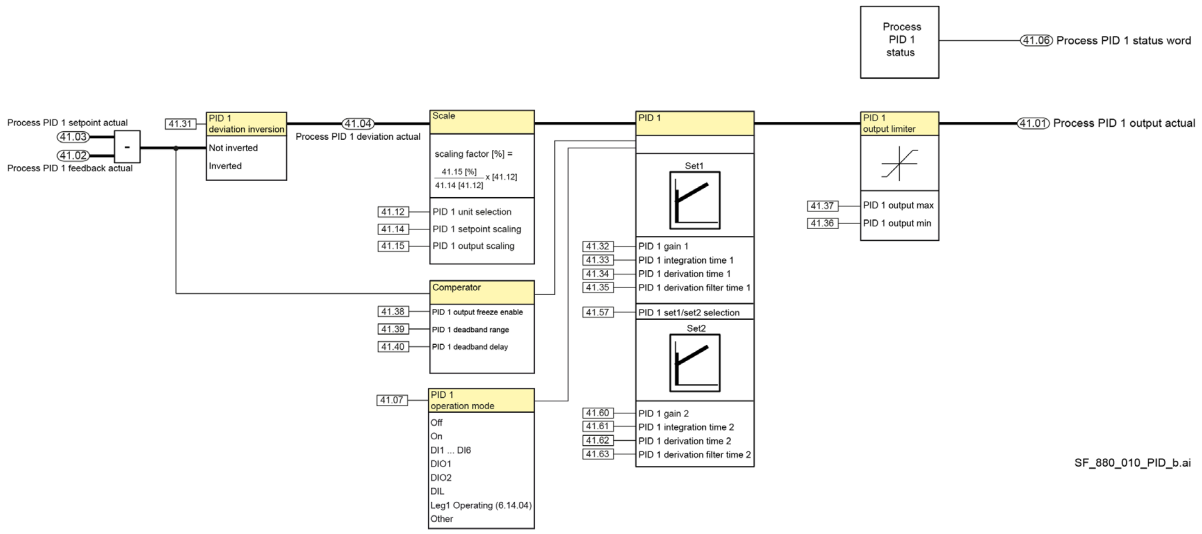

41.01	**Process PID 1 output actual**						
	Process PID 1 controller output. Displays process PID 1 controller output in percent of 41.14 PID 1 setpoint scaling and 41.15 PID 1 output scaling.						
	-325.00 … 325.00	-	%	100 = 1 %	y	n	Signal
41.02	**Process PID 1 feedback actual**						
	Process PID 1 controller feedback (actual value). Displays process PID 1 controller feedback after source selection and filtering.						
	-32767.00 … 32767.00	-	See 41.12	1 = 1 (41.12)	y	n	Signal
41.03	**Process PID 1 setpoint actual**						
	Process PID 1 controller setpoint (reference value). Displays process PID 1 controller setpoint after source selection, limitation, ramping and control panel reference selection.						
	-32767.00 … 32767.00	-	See 41.12	1 = 1 (41.12)	y	n	Signal
41.04	**Process PID 1 deviation actual**						
	Process PID 1 controller deviation (delta). Displays process PID 1 controller deviation. By default, it is setpoint - feedback, but it can be inverted using 41.31 PID 1 deviation inversion.						
	-32767.00 … 32767.00	-	See 41.12	1 = 1 (41.12)	y	n	Signal
41.06	**Process PID 1 status word**						

Process PID 1 controller status word.
Displays process PID 1 controller status information.
Bit assignment:

Bit	Name	High	Low
0	PID active	Process PID 1 controller active, see 41.07 PID 1 operation mode.	Process PID 1 controller inactive.
1	Setpoint frozen	Process PID 1 controller setpoint frozen, see 41.30 PID 1 setpoint freeze enable.	Process PID 1 controller setpoint is released.
2	Output frozen	Process PID 1 controller output frozen, see 41.38 PID 1 output freeze enable.	Process PID 1 controller output is released.

Index	Name						
	Text						
	Range	Default	Unit	Scale FbEq16	Volatile	Change running	Type
	3 PID sleep mode: reserved 4 Sleep boost: reserved 5 reserved 6 reserved 7 Output limit high: Process PID 1 controller output is limited by 41.37 PID 1 output max. — Process PID 1 controller output is not in max. limit. 8 Output limit low: Process PID 1 controller output is limited by 41.36 PID 1 output min. — Process PID 1 controller output is not in min. limit. 9 Dead band active: Process PID 1 controller dead band active, see 41.39 PID 1 dead band range. — Process PID 1 controller dead band inactive. 10 PID set: Process PID 1 controller set2 in use, see 41.57 PID 1 set1/set2 selection. — Process PID 1 controller set1 in use. 11 reserved 12 Internal setpoint active: Internal setpoint active, see 41.16 PID 1 setpoint 1 source or 41.17 PID 1 setpoint 2 source. — External setpoint active. 13 … 15 reserved						
	0000h … FFFFh	-	-	1 = 1	y	n	Signal
41.07	**PID 1 operation mode**						
	Process PID 1 controller mode. Enable/Disable process PID 1. **Other**; source selection. 0: **Disable**; 0, disable process PID 1. 1: **Enable**; 1, enable process PID 1. 3: **DI1**; 10.02.b00 DI delayed status. 4: **DI2**; 10.02.b01 DI delayed status. 5: **DI3**; 10.02.b02 DI delayed status. 6: **DI4**; 10.02.b03 DI delayed status. 7: **DI5**; 10.02.b04 DI delayed status. 8: **DI6**; 10.02.b05 DI delayed status. 11: **DIO1**; 11.02.b00 DIO delayed status. 12: **DIO2**; 11.02.b01 DIO delayed status. 19: **DIL**; 10.02.b15 DI delayed status. 21: **Leg 1 Operating (06.14.b04)**; process PID 1 controller is enabled when leg 1 is operating. 06.14.b04 Leg 1 Status Word.						
	0 … 21	Leg 1 Operating 06.14.04	-	1 = 1	n	y	Parameter
41.08	**PID 1 feedback 1 source**						
	Process PID 1 controller feedback sources. Selects the first source of process PID 1 controller feedback. **Other**; source selection. 0: **Zero**; output is set to zero. 1: **AI1 scaled (12.12)**; 12.12 AI1 scaled value. 2: **AI2 scaled (12.22)**; 12.22 AI2 scaled value. 3: **AI3 scaled (12.32)**; 12.32 AI3 scaled value. 4: **Temp 1 Actual (35.01)**; 35.01 Temp 1 Actual. 5: **Temp 2 Actual (35.21)**; 35.21 Temp 2 Actual. 6: **Temp 3 Actual (35.41)**; 35.41 Temp 3 Actual. 7: **Temp 4 Actual (35.61)**; 35.61 Temp 4 Actual.						

Index	Name						
	Text						
	Range	**Default**	**Unit**	**Scale FbEq16**	**Volatile**	**Change running**	**Type**
	0 … 7	AI1 scaled (12.12)	-	1 = 1	n	y	Parameter
41.09	**PID 1 feedback 2 source**						
	Process PID 1 controller feedback sources. Selects the second source of process PID 1 controller feedback. **Other**; source selection. 0: **Zero**; output is set to zero. 1: **AI1 scaled (12.12)**; 12.12 AI1 scaled value. 2: **AI2 scaled (12.22)**; 12.22 AI2 scaled value. 3: **AI3 scaled (12.32)**; 12.32 AI3 scaled value. 4: **Temp 1 Actual (35.01)**; 35.01 Temp 1 Actual. 5: **Temp 2 Actual (35.21)**; 35.21 Temp 2 Actual. 6: **Temp 3 Actual (35.41)**; 35.41 Temp 3 Actual. 7: **Temp 4 Actual (35.61)**; 35.61 Temp 4 Actual.						
	0 … 7	Zero	-	1 = 1	n	y	Parameter
41.10	**PID 1 feedback function**						
	Process PID 1 controller feedback processing. Defines how process PID 1 controller feedback is calculated using the two feedback sources selected by 41.08 PID 1 feedback 1 source and 41.09 PID 1 feedback 2 source. 0: **In1**; source 1. 1: **In1+In2**; source 1 plus source 2. 2: **In1-In2**; source 1 minus source 2. 5: **MIN(In1,In2)**; the lower value of the two sources. 6: **MAX(In1,In2)**; the greater value of the two sources. 12 **In2**; source 2.						
	0 … 12	In1	-	1 = 1	n	y	Parameter
41.11	**PID 1 feedback filter time**						
	Process PID 1 controller feedback filter. Defines the filter time constant for process PID 1 controller feedback.						
	0.00 … 100.00	0.00	s	100 = 1 s	n	y	Parameter
41.12	**PID 1 unit selection**						
	Process PID 1 controller unit selection. Defines the unit for signals/parameters 41.02 … 41.04, 41.14, 41.21 … 41.24, 41.26, 41.27, 41.39, 41.70 and 41.71. 0: **No Unit**; 1: **A**; ampere. 2: **V**; volt. 4: **%;** percent. 150: **°C**; degree Celsius. 151: **°F**; degree Fahrenheit. 152: **K**; Kelvin. 153: **kA**; kilo ampere.						
	0 … 153	%	-	1 = 1	n	y	Parameter
41.14	**PID 1 setpoint scaling**						
	Process PID 1 controller scaling. Defines, together with 41.15 PID 1 output scaling, a general scaling factor for the process PID 1 control chain. The output of process PID 1 controller is always in percent [%]. The scaling can be utilized when, for example, the process setpoint is put in as degree Celsius [°C]. Following formula is valid:						

Index	Name						
	Text						
	Range	**Default**	**Unit**	**Scale FbEq16**	**Volatile**	**Change running**	**Type**
	$\text{Scaling factor [\%]} = \frac{41.15\ [\%]}{41.14\ [41.12]} \times [41.12]$ With 400 [°C] equals 50 [%] process PID 1 controller output value follows: $\text{Scaling factor [\%]} = \frac{50\ [\%]}{400\ [°C]} \times [°C] = 0.125\ \%$						
	-32767.00 … 32767.00	100.00	See 41.12	1 = 1 (41.12)	n	y	Parameter
41.15	**PID 1 output scaling**						
	Process PID 1 controller scaling. See 41.14 PID 1 setpoint scaling.						
	0.00 … 325.00	100.00	%	100 = 1 %	n	y	Parameter
41.16	**PID 1 setpoint 1 source**						
	Process PID 1 controller setpoint sources. Selects the first source of process PID 1 controller setpoint. Available in 41.25 PID 1 setpoint selection as setpoint source 1. **Other**; source selection. 0: **Zero**; 0 %, setpoint is set to zero. 1: **Control panel (03.01)**; 03.01 Panel reference 1. 2: **Setpoint ChA or ChB**; depending on setting of 41.19 PID 1 internal setpoint selector 0 1 and 41.20 PID 1 internal setpoint selector A B. 3: **AI1 scaled (12.12)**; 12.12 AI1 scaled value. 4: **AI2 scaled (12.22)**; 12.22 AI2 scaled value. 5: **AI3 scaled (12.32)**; 12.32 AI3 scaled value. 6: **FBA A reference 1 (03.05)**; 03.05 FBA A reference 1. 7: **FBA A reference 2 (03.06)**; 03.06 FBA A reference 2. 9: **Motor potentiometer**; 21.80 Motor potentiometer ref act.						
	0 … 9	AI2 scaled (12.22)	-	1 = 1	n	y	Parameter
41.17	**PID 1 setpoint 2 source**						
	Process PID 1 controller setpoint sources. Selects the second source of process PID 1 controller setpoint. Available in 41.25 PID 1 setpoint selection as setpoint source 2. See 41.16 PID 1 setpoint 1 source.						
	0 … 9	Zero	-	1 = 1	n	y	Parameter
41.18	**PID 1 setpoint function**						
	Process PID 1 controller setpoint processing. Defines how process PID 1 controller setpoint is calculated using the two setpoint sources selected by 41.16 PID 1 setpoint 1 source, 41.17 PID 1 setpoint 2 source and 41.25 PID 1 setpoint selection. 0: **In1 or In2**; the source selected by 41.25 PID 1 setpoint selection. 1: **In1+In2**; source 1 plus source 2. 2: **In1-In2**; source 1 minus source 2. 3: **In1*In2**; source 1 multiplied by source 2. 4: **In1/In2**; source 1 divided by source 2. 5: **MIN(In1,In2)**; the lower value of the two sources. 6: **MAX(In1,In2)**; the greater value of the two sources. 7: **AVE(In1,In2)**; average of the two sources. 8: **sqrt(In1)**; square root of source 1. 9: **sqrt(In1-In2)**; square root of (source 1 - source 2). 10: **sqrt(In1+In2)**; square root of (source 1 + source 2).						

Index	Name						
	Text						
	Range	Default	Unit	Scale FbEq16	Volatile	Change running	Type
	11: **sqrt(In1)+sqrt(In2)**; square root of source 1 + square root of source 2.						
	0 … 11	In1 or In2	-	1 = 1	n	y	Parameter
41.19	**PID 1 internal setpoint selector 0 1**						

Process PID 1 controller internal setpoint selection.
41.19 PID 1 internal setpoint selector 0 1 and 41.20 PID 1 internal setpoint selector A B choose the internal setpoint out of parameters 41.21 … 41.24.

41.19 PID 1 internal setpoint selector 0 1	41.20 PID 1 internal setpoint selector A B	Selected internal setpoint
Zero	A	41.21 PID 1 internal setpoint 0 A
One	A	41.22 PID 1 internal setpoint 1 A
Zero	B	41.23 PID 1 internal setpoint 0 B
One	B	41.24 PID 1 internal setpoint 1 B

Other [bit]; source selection.
0: **Zero**; 0, choose zero.
1: **One**; 1, choose one.
3: **DI1**; 10.02.b00 DI delayed status.
4: **DI2**; 10.02.b01 DI delayed status.
5: **DI3**; 10.02.b02 DI delayed status.
6: **DI4**; 10.02.b03 DI delayed status.
7: **DI5**; 10.02.b04 DI delayed status.
8: **DI6**; 10.02.b05 DI delayed status.
11: **DIO1**; 11.02.b00 DIO delayed status.
12: **DIO2**; 11.02.b01 DIO delayed status.
19: **DIL**; 10.02.b15 DI delayed status.

0 … 19	Zero	-	1 = 1	n	y	Parameter

Index	Name
41.20	**PID 1 internal setpoint selector A B**

Process PID 1 controller internal setpoint selection.
41.19 PID 1 internal setpoint selector 0 1 and 41.20 PID 1 internal setpoint selector A B choose the internal setpoint out of parameters 41.21 … 41.24.

41.19 PID 1 internal setpoint selector 0 1	41.20 PID 1 internal setpoint selector A B	Selected internal setpoint
Zero	A	41.21 PID 1 internal setpoint 0 A
One	A	41.22 PID 1 internal setpoint 1 A
Zero	B	41.23 PID 1 internal setpoint 0 B
One	B	41.24 PID 1 internal setpoint 1 B

Other [bit]; source selection.
0: **A**; 0, choose A.
1: **B**; 1, choose B.
3: **DI1**; 10.02.b00 DI delayed status.
4: **DI2**; 10.02.b01 DI delayed status.
5: **DI3**; 10.02.b02 DI delayed status.
6: **DI4**; 10.02.b03 DI delayed status.
7: **DI5**; 10.02.b04 DI delayed status.
8: **DI6**; 10.02.b05 DI delayed status.
11: **DIO1**; 11.02.b00 DIO delayed status.
12: **DIO2**; 11.02.b01 DIO delayed status.

Index	Name						
	Text						
	Range	**Default**	**Unit**	**Scale FbEq16**	**Volatile**	**Change running**	**Type**
	19: **DIL**; 10.02.b15 DI delayed status.						
	0 … 19	A	-	1 = 1	n	y	Parameter
41.21	**PID 1 internal setpoint 0 A**						
	Process PID 1 controller internal setpoint 0 A. Defines PID 1 internal process setpoint 0 A.						
	-32767.00 … 32767.00	0.00	See 41.12	1 = 1 (41.12)	n	y	Parameter
41.22	**PID 1 internal setpoint 1 A**						
	Process PID 1 controller internal setpoint 1 A. Defines PID 1 internal process setpoint 1 A.						
	-32767.00 … 32767.00	0.00	See 41.12	1 = 1 (41.12)	n	y	Parameter
41.23	**PID 1 internal setpoint 0 B**						
	Process PID 1 controller internal setpoint 0 B. Defines PID 1 internal process setpoint 0 B.						
	-32767.00 … 32767.00	0.00	See 41.12	1 = 1 (41.12)	n	y	Parameter
41.24	**PID 1 internal setpoint 1 B**						
	Process PID 1 controller internal setpoint 1 B. Defines PID 1 internal process setpoint 1 B.						
	-32767.00 … 32767.00	0.00	See 41.12	1 = 1 (41.12)	n	y	Parameter
41.25	**PID 1 setpoint selection**						
	Process PID 1 controller setpoint selection. Configures the selection between 41.16 PID 1 setpoint 1 source and 41.17 PID 1 setpoint 2 source. This parameter is only effective when 41.18 PID 1 setpoint function = In1 or In2. **Other [bit]**; source selection. 0: **Setpoint source 1**; 0, 41.16 PID 1 setpoint 1 source. 1: **Setpoint source 2**; 1, 41.17 PID 1 setpoint 2 source. 3: **DI1**; 10.02.b00 DI delayed status. 4: **DI2**; 10.02.b01 DI delayed status. 5: **DI3**; 10.02.b02 DI delayed status. 6: **DI4**; 10.02.b03 DI delayed status. 7: **DI5**; 10.02.b04 DI delayed status. 8: **DI6**; 10.02.b05 DI delayed status. 11: **DIO1**; 11.02.b00 DIO delayed status. 12: **DIO2**; 11.02.b01 DIO delayed status. 19: **DIL**; 10.02.b15 DI delayed status.						
	0 … 19	Setpoint source 1	-	1 = 1	n	y	Parameter
41.26	**PID 1 setpoint min**						
	Process PID 1 controller minimum setpoint limit. Defines the minimum limit for process PID 1 controller setpoint.						
	-32767.00 … 32767.00	-32767.00	See 41.12	1 = 1 (41.12)	n	y	Parameter
41.27	**PID 1 setpoint max**						
	Process PID 1 controller maximum setpoint limit. Defines the maximum limit for process PID 1 controller setpoint.						
	-32767.00 … 32767.00	32767.00	See 41.12	1 = 1 (41.12)	n	y	Parameter
41.28	**PID 1 setpoint increase time**						
	Process PID 1 controller setpoint increase time. Defines the minimum time it takes for the setpoint to increase from 0 units to 100 units. The unit depend on setting of 41.12 PID 1 unit selection.						
	0.0 … 200000.0	0.0	s	1 = 1 s	n	y	Parameter

Index	Name						
	Text						
	Range	Default	Unit	Scale FbEq16	Volatile	Change running	Type
41.29	**PID 1 setpoint decrease time**						
	Process PID 1 controller setpoint decrease time. Defines the minimum time it takes for the setpoint to decrease from 100 units to 0 units. The unit depend on setting of 41.12 PID 1 unit selection.						
	0.0 … 200000.0	0.0	s	1 = 1 s	n	y	Parameter
41.30	**PID 1 setpoint freeze enable**						
	Process PID 1 controller setpoint freeze selection. Freezes, or defines a source that can be used to freeze, the setpoint of process PID 1 controller. This feature is useful when the setpoint is based on a process feedback connected to an analog input and the connected sensor must be e.g., serviced without stopping the process. **Other [bit]**; source selection. 0: **Release**; 0, release process PID 1 controller setpoint. 1: **Freeze**; 1, freeze process PID 1 controller setpoint. 3: **DI1**; 10.02.b00 DI delayed status. 4: **DI2**; 10.02.b01 DI delayed status. 5: **DI3**; 10.02.b02 DI delayed status. 6: **DI4**; 10.02.b03 DI delayed status. 7: **DI5**; 10.02.b04 DI delayed status. 8: **DI6**; 10.02.b05 DI delayed status. 11: **DIO1**; 11.02.b00 DIO delayed status. 12: **DIO2**; 11.02.b01 DIO delayed status. 19: **DIL**; 10.02.b15 DI delayed status.						
	0 … 19	Release	-	1 = 1	n	y	Parameter
41.31	**PID 1 deviation inversion**						
	Process PID 1 controller deviation (delta) inversion. Inverts the input of process PID 1 controller. **Other [bit]**; source selection. 0: **Not inverted (Ref - Fbk)**; 0, deviation not inverted (deviation = setpoint - feedback). 1: **Inverted (Fbk - Ref)**; 1, deviation inverted (deviation = feedback - setpoint).						
	0 … 1	Not inverted (Ref - Fbk)	-	1 = 1	n	y	Parameter
41.32	**PID 1 gain 1**						
	Process PID 1 controller gain 1. Defines gain 1 of process PID 1 controller. See 41.33 PID 1 integration time 1.						
	0.000 … 100.000	1.000	-	1000 = 1	n	y	Parameter
41.33	**PID 1 integration time 1**						
	Process PID 1 controller integration time 1. Defines integration time 1 of process PID 1 controller. This time needs to be set to the same order of magnitude as the reaction time of the process. Otherwise, it will cause instability.						

Index	Name						
	Text						
	Range	**Default**	**Unit**	**Scale FbEq16**	**Volatile**	**Change running**	**Type**
	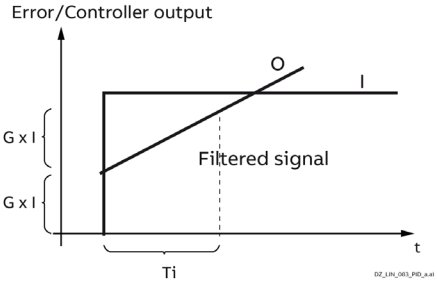 I = controller input (error) O = controller output G = gain Ti = integraqtion time **Note**: Setting 41.33 PID 1 integration time 1 = 0 disables integration time 1 and turns the process PID controller into a process PD controller.						
	0.0 … 32767.0	60.0	s	10 = 1 s	n	y	Parameter
41.34	**PID 1 derivation time 1**						
	Process PID 1 controller derivation time 1. Defines derivation time 1 of process PID 1 controller. The derivative component at the controller output is calculated on basis of two consecutive error values, EK-1 and EK, according to following formula: $\frac{(41.34) \times (E_K - E_{K-1})}{T_S}$ TS = 2 ms sample time. Error = E = setpoint – feedback.						
	0.00 … 100.00	0.00	s	100 = 1 s	n	y	Parameter
41.35	**PID 1 derivation filter time 1**						
	Process PID 1 controller derivation filter time 1. Defines derivation filter time 1 of process PID 1 controller. Filter time of the 1-pole filter used to smooth the derivative component 1 of process PID 1 controller. 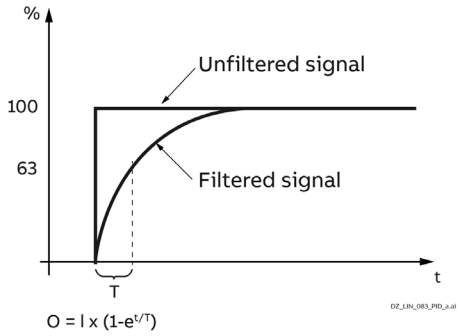 $O = I \times (1-e^{t/T})$ I = filter input (step) O = filter output t = time T = filter time constant						
	0.00 … 100.00	0.02	s	100 = 1 s	n	y	Parameter

Index	Name						
	Text						
	Range	**Default**	**Unit**	**Scale FbEq16**	**Volatile**	**Change running**	**Type**
41.36	**PID 1 output min**						
	Process PID 1 controller minimum output limit. Defines the minimum limit for process PID 1 controller output in percent of 41.14 PID 1 setpoint scaling and 41.15 PID 1 output scaling. Using the minimum and maximum limits restricts the operation range.						
	-325.00 … 325.00	0.00	%	100 = 1 %	n	y	Parameter
41.37	**PID 1 output max**						
	Process PID 1 controller maximum output limit. Defines the minimum limit for process PID 1 controller output in percent of 41.14 PID 1 setpoint scaling and 41.15 PID 1 output scaling. Using the minimum and maximum limits restricts the operation range.						
	-325.00 … 325.00	100.00	%	100 = 1 %	n	y	Parameter
41.38	**PID 1 output freeze enable**						
	Process PID 1 controller output freeze selection. Freezes, or defines a source that can be used to freeze, the output of process PID 1 controller. This feature can be used when e.g., a sensor providing process feedback must be serviced without stopping the process. **Other [bit]**; source selection. 0: **Release**; 0, release process PID 1 controller output. 1: **Freeze**; 1, freeze process PID 1 controller output. 3: **DI1**; 10.02.b00 DI delayed status. 4: **DI2**; 10.02.b01 DI delayed status. 5: **DI3**; 10.02.b02 DI delayed status. 6: **DI4**; 10.02.b03 DI delayed status. 7: **DI5**; 10.02.b04 DI delayed status. 8: **DI6**; 10.02.b05 DI delayed status. 11: **DIO1**; 11.02.b00 DIO delayed status. 12: **DIO2**; 11.02.b01 DIO delayed status. 19: **DIL**; 10.02.b15 DI delayed status.						
	0 … 19	Release	-	1 = 1	n	y	Parameter
41.39	**PID 1 dead band range**						
	Process PID 1 controller dead band range. Defines a dead band around the setpoint. Whenever the process feedback enters the dead band, a delay timer starts. If the feedback remains within the dead band longer than the delay in 40.40 PID dead band delay, the PID 1 controller output is frozen. Normal operation resumes after the feedback value leaves the dead band.						

Index	Name						
	Text						
	Range	Default	Unit	Scale FbEq16	Volatile	Change running	Type
	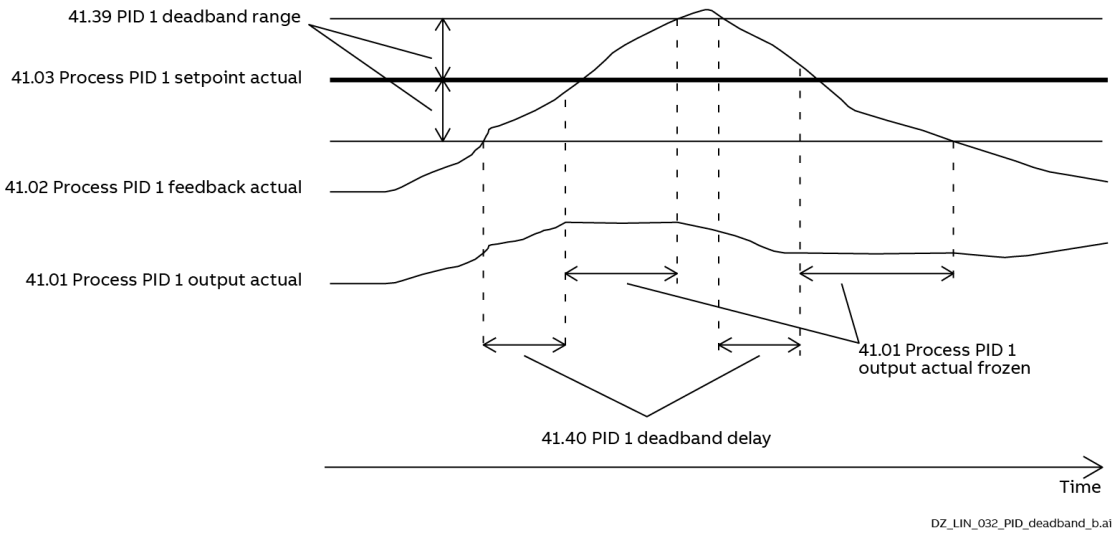						
	0.00 … 32767.00	0.00	See 41.12	1 = 1 (41.12)	n	y	Parameter
41.40	**PID 1 dead band delay**						
	Process PID 1 controller delay for dead band area. Delay for the dead band. See 41.39 PID 1 dead band range.						
	0.0 … 3600.0	0.0	s	10 = 1 s	n	y	Parameter
41.57	**PID 1 set1/set2 selection**						
	Process PID 1 controller set selection. Configures the selection between process PID 1 controller set1 (parameters 41.32 … 41.35) or PID 1 controller set2 (parameters 41.60 … 41.63). **Other [bit]**; source selection. 0: **Select set1**; 0, select PID 1 controller set1. 1: **Select set2**; 1, select PID 1 controller set2. 3: **DI1**; 10.02.b00 DI delayed status. 4: **DI2**; 10.02.b01 DI delayed status. 5: **DI3**; 10.02.b02 DI delayed status. 6: **DI4**; 10.02.b03 DI delayed status. 7: **DI5**; 10.02.b04 DI delayed status. 8: **DI6**; 10.02.b05 DI delayed status. 11: **DIO1**; 11.02.b00 DIO delayed status. 12: **DIO2**; 11.02.b01 DIO delayed status. 19: **DIL**; 10.02.b15 DI delayed status. 20: **Set1/Set2 adaptive**; uses process PID 1 controller set1 and process PID 1 controller set2 to adapt the gain and integration time of process PID 1 controller according to 41.70 PID 1 adaptive switching level A and 41.71 PID 1 adaptive switching level B.						
	0 … 20	Select set1	-	1 = 1	n	y	Parameter
41.59	**PID 1 ramp/panel selector**						
	Process PID 1 controller setpoint selector. Selects the source for 41.03 Process PID 1 setpoint actual out of the process PID 1 controller ramp output or the control panel. **Other [bit]**; source selection. 0: **Ramp**; 0, select setpoint from the process PID 1 controller ramp output. 1: **Panel**; 1, select setpoint from the control panel. 2: **Auto**; the control panel is set to remote mode, follows Auto = 0 (Ramp), the control panel is set to local mode, follows Auto = 1 (Panel).						

Index	Name						
	Text						
	Range	**Default**	**Unit**	**Scale FbEq16**	**Volatile**	**Change running**	**Type**
	3: **DI1**; 10.02.b00 DI delayed status. 4: **DI2**; 10.02.b01 DI delayed status. 5: **DI3**; 10.02.b02 DI delayed status. 6: **DI4**; 10.02.b03 DI delayed status. 7: **DI5**; 10.02.b04 DI delayed status. 8: **DI6**; 10.02.b05 DI delayed status. 11: **DIO1**; 11.02.b00 DIO delayed status. 12: **DIO2**; 11.02.b01 DIO delayed status. 19: **DIL**; 10.02.b15 DI delayed status.						
	0 … 19	Auto	-	1 = 1	n	y	Parameter
41.60	**PID 1 gain 2**						
	Process PID 1 controller gain 2. Defines gain 2 of process PID 1 controller. See 41.61 PID 1 integration time 2.						
	0.000 … 100.000	1.000	-	1000 = 1	n	y	Parameter
41.61	**PID 1 integration time 2**						
	Process PID 1 controller integration time 2. Defines integration time 2 of process PID 1 controller. This time needs to be set to the same order of magnitude as the reaction time of the process. Otherwise, it will cause instability. 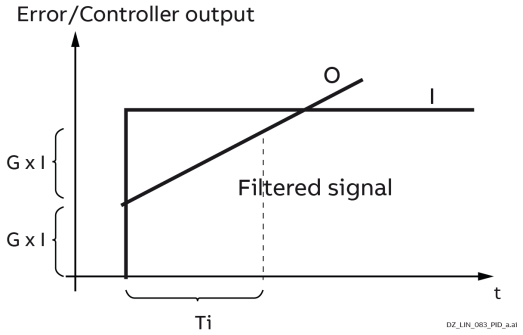 I = controller input (error) O = controller output G = gain Ti = integraqtion time **Note**: Setting 41.61 PID 1 integration time 2 = 0 disables integration time 2 and turns the process PID controller into a process PD controller.						
	0.0 … 32767.0	60.0	s	1 = 1 s	n	y	Parameter
41.62	**PID 1 derivation time 2**						
	Process PID 1 controller derivation time 2. Defines derivation time 2 of process PID 1 controller. The derivative component at the controller output is calculated on basis of two consecutive error values, EK-1 and EK, according to following formula: $\frac{(41.62) \times (E_K - E_{K-1})}{T_S}$ TS = 2 ms sample time. Error = E = setpoint - feedback.						
	0.00 … 100.00	0.00	s	100 = 1 s	n	y	Parameter
41.63	**PID 1 derivation filter time 2**						
	Process PID 1 controller derivation filter time 2. Defines derivation filter time 2 of process PID 1 controller. Filter time of the 1-pole filter used to smooth the derivative component 2 of process PID 1 controller.						

Index	Name						
	Text						
	Range	Default	Unit	Scale FbEq16	Volatile	Change running	Type
	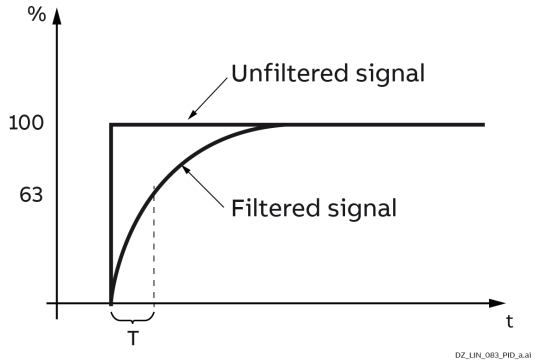 $O = I \times (1-e^{t/T})$ I = filter input (step) O = filter output t = time T = filter time constant						
	0.00 … 100.00	0.02	s	100 = 1 s	n	y	Parameter
41.70	**PID 1 adaptive switching level A**						
	Process PID 1 controller adaptive switching level A. Process PID 1 controller set1 and process PID 1 controller set2 can be used to adapt the gain and integration time of process PID 1 controller according to 41.70 PID 1 adaptive switching level A and 41.71 PID 1 adaptive switching level B: 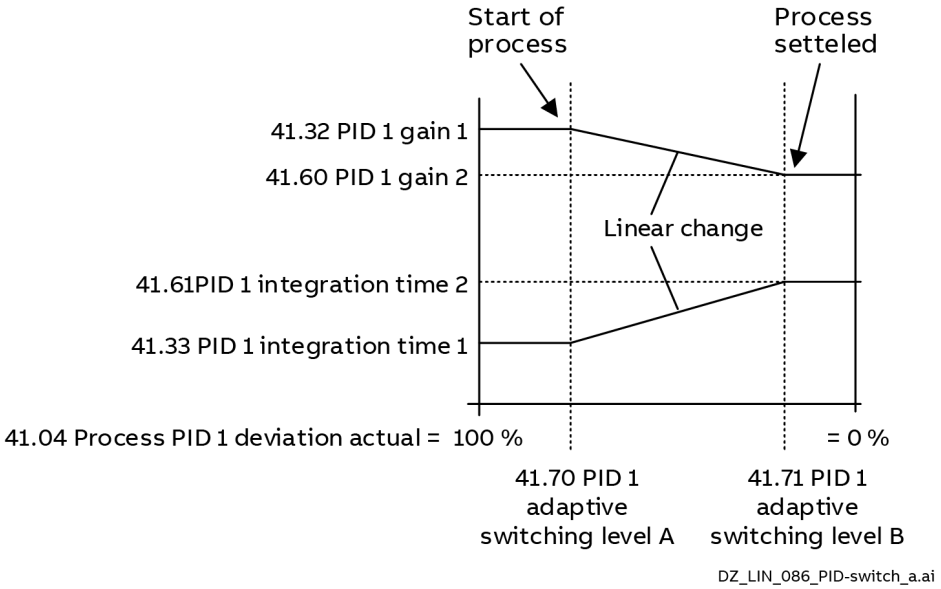 Activation, see 41.57 PID 1 set1/set2 selection.						
	-32767.00 … 32767.00	20.00	See 41.12	1 = 1 (41.12)	n	y	Parameter
41.71	**PID 1 adaptive switching level B**						
	Process PID 1 controller adaptive switching level B. See 41.70 PID 1 adaptive switching level A.						
	-32767.00 … 32767.00	10.00	See 41.12	1 = 1 (41.12)	n	y	Parameter

42 Process PID set 2

Description see group 41 Process PID 1.

43 Process PID set 3

Description see group 41 Process PID 1.

47 Data storage

Data storage parameters that can be written to and read from using other parameters.
Note: For different data types, different storage parameters are available.

Index	Name						
	Text						
	Range	**Default**	**Unit**	**Scale FbEq16**	**Volatile**	**Change running**	**Type**
47.01	**Data storage 1 real32**						
	32-bit data. Data storage parameter 1. **Note**: Not useable in association with bit type signals/parameters e.g., 06.01 Main Control Word active.						
	-2147483.000 … 2147483.000	0.000	-	1 = 1	n	y	Parameter
47.02	**Data storage 2 real32**						
	32-bit data. Data storage parameter 2. **Note**: Not useable in association with bit type signals/parameters e.g., 06.01 Main Control Word active.						
	-2147483.000 … 2147483.000	0.000	-	1 = 1	n	y	Parameter
47.03	**Data storage 3 real32**						
	32-bit data. Data storage parameter 3. **Note**: Not useable in association with bit type signals/parameters e.g., 06.01 Main Control Word active.						
	-2147483.000 … 2147483.000	0.000	-	1 = 1	n	y	Parameter
47.04	**Data storage 4 real32**						
	32-bit data. Data storage parameter 4. **Note**: Not useable in association with bit type signals/parameters e.g., 06.01 Main Control Word active.						
	-2147483.000 … 2147483.000	0.000	-	1 = 1	n	y	Parameter
47.05	**Data storage 5 real32**						
	32-bit data. Data storage parameter 5. **Note**: Not useable in association with bit type signals/parameters e.g., 06.01 Main Control Word active.						
	-2147483.000 … 2147483.000	0.000	-	1 = 1	n	y	Parameter
47.06	**Data storage 6 real32**						
	32-bit data. Data storage parameter 6. **Note**: Not useable in association with bit type signals/parameters e.g., 06.01 Main Control Word active.						
	-2147483.000 … 2147483.000	0.000	-	1 = 1	n	y	Parameter
47.07	**Data storage 7 real32**						
	32-bit data. Data storage parameter 7. **Note**: Not useable in association with bit type signals/parameters e.g., 06.01 Main Control Word active.						
	-2147483.000 … 2147483.000	0.000	-	1 = 1	n	y	Parameter

Index	Name						
	Text						
	Range	**Default**	**Unit**	**Scale FbEq16**	**Volatile**	**Change running**	**Type**
47.08	**Data storage 8 real32**						
	32-bit data. Data storage parameter 8. **Note**: Not useable in association with bit type signals/parameters e.g., 06.01 Main Control Word active.						
	-2147483.000 … 2147483.000	0.000	-	1 = 1	n	y	Parameter
47.11	**Data storage 1 int32**						
	32-bit data. Data storage parameter 9.						
	-2147483648 … 2147483647	0	-	1 = 1	n	y	Parameter
47.12	**Data storage 2 int32**						
	32-bit data. Data storage parameter 10.						
	-2147483648 … 2147483647	0	-	1 = 1	n	y	Parameter
47.13	**Data storage 3 int32**						
	32-bit data. Data storage parameter 11.						
	-2147483648 … 2147483647	0	-	1 = 1	n	y	Parameter
47.14	**Data storage 4 int32**						
	32-bit data. Data storage parameter 12.						
	-2147483648 … 2147483647	0	-	1 = 1	n	y	Parameter
47.15	**Data storage 5 int32**						
	32-bit data. Data storage parameter 13.						
	-2147483648 … 2147483647	0	-	1 = 1	n	y	Parameter
47.16	**Data storage 6 int32**						
	32-bit data. Data storage parameter 14.						
	-2147483648 … 2147483647	0	-	1 = 1	n	y	Parameter
47.17	**Data storage 7 int32**						
	32-bit data. Data storage parameter 15.						
	-2147483648 … 2147483647	0	-	1 = 1	n	y	Parameter
47.18	**Data storage 8 int32**						
	32-bit data. Data storage parameter 16.						
	-2147483648 … 2147483647	0	-	1 = 1	n	y	Parameter
47.21	**Data storage 1 int16**						
	16-bit data. Data storage parameter 17. **Note**: Not useable in association with bit type signals/parameters e.g., 06.01 Main Control Word active.						
	-32768 … 32767	0	-	1 = 1	n	y	Parameter
47.22	**Data storage 2 int16**						
	16-bit data. Data storage parameter 18. **Note**: Not useable in association with bit type signals/parameters e.g., 06.01 Main Control Word active.						
	-32768 … 32767	0	-	1 = 1	n	y	Parameter

Index	Name						
	Text						
	Range	**Default**	**Unit**	**Scale FbEq16**	**Volatile**	**Change running**	**Type**
47.23	**Data storage 3 int16**						
	16-bit data. Data storage parameter 19. **Note**: Not useable in association with bit type signals/parameters e.g., 06.01 Main Control Word active.						
	-32768 … 32767	0	-	1 = 1	n	y	Parameter
47.24	**Data storage 4 int16**						
	16-bit data. Data storage parameter 20. **Note**: Not useable in association with bit type signals/parameters e.g., 06.01 Main Control Word active.						
	-32768 … 32767	0	-	1 = 1	n	y	Parameter
47.25	**Data storage 5 int16**						
	16-bit data. Data storage parameter 21. **Note**: Not useable in association with bit type signals/parameters e.g., 06.01 Main Control Word active.						
	-32768 … 32767	0	-	1 = 1	n	y	Parameter
47.26	**Data storage 6 int16**						
	16-bit data. Data storage parameter 22. **Note**: Not useable in association with bit type signals/parameters e.g., 06.01 Main Control Word active.						
	-32768 … 32767	0	-	1 = 1	n	y	Parameter
47.27	**Data storage 7 int16**						
	16-bit data. Data storage parameter 23. **Note**: Not useable in association with bit type signals/parameters e.g., 06.01 Main Control Word active.						
	-32768 … 32767	0	-	1 = 1	n	y	Parameter
47.28	**Data storage 8 int16**						
	16-bit data. Data storage parameter 24. **Note**: Not useable in association with bit type signals/parameters e.g., 06.01 Main Control Word active.						
	-32768 … 32767	0	-	1 = 1	n	y	Parameter

49 Panel port communication

Communication settings for the control panel/PC tool link.

Index	Name						
	Text						
	Range	**Default**	**Unit**	**Scale FbEq16**	**Volatile**	**Change running**	**Type**
	Attention: Any changed parameters must be validated by means of 49.06 Refresh settings = Refresh.						
49.01	**Node ID number**						
	Control panel/PC tool link node ID number. Defines the node ID of the unit. All units connected to the network (panel bus) must have a unique node ID. **Note**: For units in a network, it is advisable to reserve 49.01 Network ID number = 1 for spare/replacement units.						

Index	Name						
	Text						
	Range	**Default**	**Unit**	**Scale FbEq16**	**Volatile**	**Change running**	**Type**
	1 … 32	1	-	1 = 1	n	y	Parameter
49.03	**Baud rate**						
	Control panel/PC tool link speed. Defines the transfer rate of the control panel/PC tool link. 1: **38.4 kbps**; 38.4 kbit/s. 2: **57.6 kbps**; 57.6 kbit/s. 3: **86.4 kbps**; 86.4 kbit/s. 4: **115.2 kbps**; 115.2 kbit/s. 5: **230.4 kbps**; 230.4 kbit/s. 6: **460.8 kbps**; 460.8 kbit/s. 7: **921.6 kbps**; 921.6 kbit/s.						
	1 … 7	230.4 kbps	-	1 = 1	n	y	Parameter
49.04	**Communication loss time**						
	Control panel/PC tool link communication loss timeout. Defines the time delay for the control panel/PC tool communication loss before the action defined in 49.05 Communication loss action is executed. Time count starts when the communication link fails to update the message.						
	0 … 32500	1000	ms	1 = 1 ms	n	y	Parameter
49.05	**Communication loss action**						
	Control panel/PC tool link communication loss action. Selects how the unit reacts to a control panel/PC tool communication break. 0: **No action**; none, disable communication loss function. 1: **Fault**; the event generates fault 5546 Control panel loss, and the unit is disabled. This occurs only when the unit is controlled from the control panel/PC tool (local mode). 2: **Warning**; the event generates warning 1130 Control panel loss. The unit continues with the same current/voltage/power level it was operating at. This occurs only when the unit is controlled from the control panel/PC tool (local mode). 4: **Fault always**; reserved. **WARNING** Make sure that it is safe to continue operation in case of a communication break.						
	0 … 5	Fault	-	1 = 1	n	y	Parameter
49.06	**Refresh settings**						
	Control panel/PC tool link communication refresh command. Applies the settings of parameters 49.01 … 49.05. The value reverts automatically to Done when the refresh is done. **Note**: Refreshing may cause a communication break, thus reconnecting the unit may be required. 0: **Done**; 0, normal operation or refreshing done. 1: **Refresh**; 1, refresh parameters 49.01 … 49.05.						
	0 … 1	Done	-	1 = 1	y	y	Parameter
49.24	**Panel actual source**						
	Control panel value selection. Selects a value to be displayed in the top right corner of the control panel. **Note:** 49.24 Panel actual source is only effective when the control panel is not the active reference source. **Other**; source selection. 0: **Automatic**; the active reference is displayed.						
	0 … 0	Automatic	-	1 = 1	n	y	Parameter

50 Fieldbus adapter (FBA)

Fieldbus communication configuration.

Attention: Any changed parameters must be validated by means of 51.27 FBA A par refresh = Refresh.

Index	Name						
	Text						
	Range	**Default**	**Unit**	**Scale FbEq16**	**Volatile**	**Change running**	**Type**
50.01	**FBA A enable**						
	Fieldbus adapter A enable/disable. Enables/disables communication between the unit and fieldbus adapter A. Specifies the location of the adapter in slot 1 … slot 3. 0: **Disable**; disable communication between the unit and fieldbus adapter A. 1: **Option slot 1**; enable communication between the unit and fieldbus adapter A. The adapter is in slot 1. 2: **Option slot 2**; enable communication between the unit and fieldbus adapter A. The adapter is in slot 2. 3: **Option slot 3**; enable communication between the unit and fieldbus adapter A. The adapter is in slot 3.						
	0 … 3	Disable	-	1 = 1	n	n	Parameter
50.02	**FBA A comm loss func**						
	Fieldbus adapter A communication loss action. Selects how the unit reacts to a fieldbus communication break. 0: **No action**; none, disable communication loss function. 1: **Fault**; the event generates fault 5223 FBA A communication, and the unit is disabled. This occurs only when the unit is controlled from the fieldbus. 2: **Warning**; the event generates warning 1220 FBA A communication. The unit continues with the same current/voltage/power level it was operating at. This occurs only when the unit is controlled from the fieldbus. **WARNING** Make sure that it is safe to continue operation in case of a communication break. 4: **Fault always**; the event generates fault 5223 FBA A communication, and the unit is disabled. This occurs even though no control is expected from the fieldbus. 5: **Warning always**; the event generates warning 1220 FBA A communication. The unit continues with the same current/voltage/power level it was operating at. This occurs even though no control is expected from the fieldbus. **WARNING** Make sure that it is safe to continue operation in case of a communication break.						
	0 … 5	No action	-	1 = 1	n	y	Parameter
50.03	**FBA A comm loss timeout**						
	Fieldbus adapter A communication loss timeout. Defines the time delay for the fieldbus communication loss before the action defined in 50.02 FBA A comm loss func is executed. Time count starts when the communication link fails to update the message.						
	0 … 32500	300	ms	1 = 1 ms	n	y	Parameter
50.09	**FBA A SW transparent source**						
	Fieldbus adapter A status word transparent source. Selects the source for the status word when the fieldbus adapter is set to a transparent communication profile e.g., by its configuration parameters in group 51. The parameter to be used is fieldbus dependent. **Other**; source selection e.g., 06.13 Global Status Word. 0: **Not selected**; no source selected.						
	0 … 0	Not selected	-	1 = 1	n	y	Parameter

Index	Name						
	Text						
	Range	**Default**	**Unit**	**Scale FbEq16**	**Volatile**	**Change running**	**Type**
50.10	**FBA A act1 transparent source**						
	Fieldbus adapter A actual value 1 transparent source. Selects the source for actual value 1 sent by fieldbus adapter A to the master (e.g., PLC) **Other**; source selection e.g., a value from group 1. 0: **Not selected**; no source selected.						
	0 … 0	Not selected	-	1 = 1	n	y	Parameter
50.11	**FBA A act2 transparent source**						
	Fieldbus adapter A actual value 2 transparent source. Selects the source for actual value 2 sent by fieldbus adapter A to the master (e.g., PLC) **Other**; source selection e.g., a value from group 1. 0: **Not selected**; no source selected.						
	0 … 0	Not selected	-	1 = 1	n	y	Parameter
50.12	**FBA A debug mode**						
	Fieldbus adapter A debug mode. Enables the display of the raw (unmodified) data received from and sent to fieldbus adapter A. The data are displayed in parameters 50.13 … 50.18. **Note**: This functionality should only be used for debugging. 0: **Disable**; disable the display of raw data from fieldbus adapter A. 1: **Enable**; enable the display of raw data from fieldbus adapter A.						
	0 … 1	Disable	-	1 = 1	n	n	Parameter
50.13	**FBA A control word**						
	Fieldbus adapter A raw control word. Displays the raw (unmodified) control word sent by the master (e.g., PLC) to fieldbus adapter A if 50.12 FBA A debug mode = Enable.						
	00000000h … FFFFFFFFh	-	-	1 = 1	y	n	Signal
50.14	**FBA A reference 1**						
	Fieldbus adapter A raw reference 1. Displays the raw (unmodified) reference 1 (REF1) sent by the master (e.g., PLC) to fieldbus adapter A if 50.12 FBA A debug mode = Enable.						
	-2147483648 … 2147483647	-	-	1 = 1	y	n	Signal
50.15	**FBA A reference 2**						
	Fieldbus adapter A raw reference 2. Displays the raw (unmodified) reference 2 (REF2) sent by the master (e.g., PLC) to fieldbus adapter A if 50.12 FBA A debug mode = Enable.						
	-2147483648 … 2147483647	-	-	1 = 1	y	n	Signal
50.16	**FBA A status word**						
	Fieldbus adapter A raw status word. Displays the raw (unmodified) status word sent by fieldbus adapter A to the master (e.g., PLC) if 50.12 FBA A debug mode = Enable.						
	00000000h … FFFFFFFFh	-	-	1 = 1	y	n	Signal
50.17	**FBA A actual value 1**						
	Fieldbus adapter A raw actual value 1. Displays the raw (unmodified) actual value 1 (ACT1) sent by fieldbus adapter A to the master (e.g., PLC) if 50.12 FBA A debug mode = Enable.						
	-2147483648 … 2147483647	-	-	1 = 1	y	n	Signal
50.18	**FBA A actual value 2**						
	Fieldbus adapter A raw actual value 2. Displays the raw (unmodified) actual value 2 (ACT2) sent by fieldbus adapter A to the master (e.g., PLC) if 50.12 FBA A debug mode = Enable.						
	-2147483648 … 2147483647	-	-	1 = 1	y	n	Signal

Index	Name						
	Text						
	Range	Default	Unit	Scale FbEq16	Volatile	Change running	Type
50.21	FBA A timelevel sel						
	Fieldbus adapter A communication time levels. In general, lower time levels of read/write services reduce the CPU load. The table below shows the time levels of the read/write services for cyclic high and cyclic low data depending on 50.21 FBA A timelevel sel: **50.21 FBA A timelevel sel** / **Cyclic high*** / **Cyclic low**** Normal / 2 ms / 10 ms Fast / 500 µs / 2 ms Very fast / 250 µs / 2 ms Monitoring / 10 ms / 2 ms *Cyclic high data consist of fieldbus status word, ACT1 and ACT2 from the fieldbus. **Cyclic low data consist of the parameter data mapped in groups 52 FBA A data in, 53 FBA A data out and acyclic data. Control word, REF1 and REF2 from the fieldbus are handled as interrupts generated on receipt of cyclic high messages. 0: **Normal**; normal speed. 1: **Fast**; fast speed. 2: **Very fast**; very fast speed. 3: **Monitoring**; slow speed. Optimized for PC tool communication and monitoring usage.						
	0 … 3	Normal	-	1 = 1	n	n	Parameter
50.31	FBA B enable						
	Fieldbus adapter B enable/disable. Enables/disables communication between the unit and fieldbus adapter B. Specifies the location of the adapter in slot 1 … slot 3. 0: **Disable**; disable communication between the unit and fieldbus adapter B. 1: **Option slot 1**; enable communication between the unit and fieldbus adapter B. The adapter is in slot 1. 2: **Option slot 2**; enable communication between the unit and fieldbus adapter B. The adapter is in slot 2. 3: **Option slot 3**; enable communication between the unit and fieldbus adapter B. The adapter is in slot 3.						
	0 … 3	Disable	-	1 = 1	n	n	Parameter
50.32	FBA B comm loss func						
	Fieldbus adapter B communication loss action. Selects how the unit reacts to a fieldbus communication break. 0: **No action**; none, disable communication loss function. 1: **Fault**; the event generates fault 5224 FBA B communication, and the unit is disabled. This occurs only when the unit is controlled from the fieldbus. 2: **Warning**; the event generates warning 1221 FBA B communication. The unit continues with the same current/voltage/power level it was operating at. This occurs only when the unit is controlled from the fieldbus. **WARNING** Make sure that it is safe to continue operation in case of a communication break. 4: **Fault always**; the event generates fault 5224 FBA B communication, and the unit is disabled. This occurs even though no control is expected from the fieldbus. 5: **Warning always**; the event generates warning 1220 FBA A communication. The unit continues with the same current/voltage/power level it was operating at. This occurs even though no control is expected from the fieldbus.						

Index	Name						
	Text						
	Range	**Default**	**Unit**	**Scale FbEq16**	**Volatile**	**Change running**	**Type**
	WARNING Make sure that it is safe to continue operation in case of a communication break.						
	0 … 5	No action	-	1 = 1	n	y	Parameter
50.33	**FBA B comm loss timeout**						
	Fieldbus adapter B communication loss timeout. Defines the time delay for the fieldbus communication loss before the action defined in 50.32 FBA B comm loss func is executed. Time count starts when the communication link fails to update the message.						
	0 … 32500	300	ms	1 = 1 ms	n	y	Parameter
50.39	**FBA B SW transparent source**						
	Fieldbus adapter B status word transparent source. Selects the source for the status word when the fieldbus adapter is set to a transparent communication profile e.g., by its configuration parameters in group 54. The parameter to be used is fieldbus dependent. **Other**; source selection e.g., 06.13 Global Status Word. 0: **Not selected**; no source selected.						
	0 … 0	Not selected	-	1 = 1	n	y	Parameter
50.40	**FBA B act1 transparent source**						
	Fieldbus adapter B actual value 1 transparent source. Selects the source for actual value 1 sent by fieldbus adapter B to the master (e.g., PLC) **Other**; source selection e.g., a value from group 1. 0: **Not selected**; no source selected.						
	0 … 0	Not selected	-	1 = 1	n	y	Parameter
50.41	**FBA B act2 transparent source**						
	Fieldbus adapter B actual value 2 transparent source. Selects the source for actual value 2 sent by fieldbus adapter B to the master (e.g., PLC) **Other**; source selection e.g., a value from group 1. 0: **Not selected**; no source selected.						
	0 … 0	Not selected	-	1 = 1	n	y	Parameter
50.42	**FBA B debug mode**						
	Fieldbus adapter B debug mode. Enables the display of the raw (unmodified) data received from and sent to fieldbus adapter B. The data are displayed in parameters 50.43…50.48. Note: This functionality should only be used for debugging. 0: **Disable**; disable the display of raw data from fieldbus adapter B. 1: **Enable**; enable the display of raw data from fieldbus adapter B.						
	0 … 1	Disable	-	1 = 1	n	n	Parameter
50.43	**FBA B control word**						
	Fieldbus adapter B raw control word. Displays the raw (unmodified) control word sent by the master (e.g., PLC) to fieldbus adapter B if 50.42 FBA B debug mode = Enable						
	00000000h … FFFFFFFFh	-	-	1 = 1	y	n	Signal
50.44	**FBA B reference 1**						
	Fieldbus adapter B raw reference 1. Displays the raw (unmodified) reference 1 (REF1) sent by the master (e.g., PLC) to fieldbus adapter B if 50.42 FBA B debug mode = Enable.						
	-2147483648 … 2147483647	-	-	1 = 1	y	n	Signal

Index	Name						
	Text						
	Range	Default	Unit	Scale FbEq16	Volatile	Change running	Type
50.45	**FBA B reference 2**						
	Fieldbus adapter B raw reference 2. Displays the raw (unmodified) reference 2 (REF2) sent by the master (e.g., PLC) to fieldbus adapter B if 50.42 FBA B debug mode = Enable.						
	-2147483648 … 2147483647	-	-	1 = 1	y	n	Signal
50.46	**FBA B status word**						
	Fieldbus adapter B raw status word. Displays the raw (unmodified) status word sent by fieldbus adapter B to the master (e.g., PLC) if 50.42 FBA B debug mode = Enable.						
	00000000h … FFFFFFFFh	-	-	1 = 1	y	n	Signal
50.47	**FBA B actual value 1**						
	Fieldbus adapter B raw actual value 1. Displays the raw (unmodified) actual value 1 (ACT1) sent by fieldbus adapter B to the master (e.g., PLC) if 50.42 FBA B debug mode = Enable.						
	-2147483648 … 2147483647	-	-	1 = 1	y	n	Signal
50.48	**FBA B actual value 2**						
	Fieldbus adapter B raw actual value 2. Displays the raw (unmodified) actual value 1 (ACT2) sent by fieldbus adapter B to the master (e.g., PLC) if 50.42 FBA B debug mode = Enable.						
	-2147483648 … 2147483647	-	-	1 = 1	y	n	Signal
50.51	**FBA B timelevel sel**						
	Fieldbus adapter B communication time levels. In general, lower time levels of read/write services reduce the CPU load. The table below shows the time levels of the read/write services for cyclic high and cyclic low data depending on 50.51 FBA B timelevel sel: **50.51 FBA B timelevel sel** / **Cyclic high*** / **Cyclic low**** Normal / 2 ms / 10 ms Fast / 500 µs / 2 ms Very fast / 250 µs / 2 ms Monitoring / 10 ms / 2 ms *Cyclic high data consist of fieldbus status word, ACT1 and ACT2 from the fieldbus. **Cyclic low data consist of the parameter data mapped in groups 55 FBA B data in, 56 FBA B data out and acyclic data. Control word, REF1 and REF2 from the fieldbus are handled as interrupts generated on receipt of cyclic high messages. 0: **Normal**; normal speed. 1: **Fast**; fast speed. 2: **Very fast**; very fast speed. 3: **Monitoring**; slow speed. Optimized for PC tool communication and monitoring usage.						
	0 … 3	Normal	-	1 = 1	n	n	Parameter

51 FBA A settings

Fieldbus adapter A configuration.

Attention: Any changed parameters must be validated by means of 51.27 FBA A par refresh = Refresh.

Index	Name						
	Text						
	Range	Default	Unit	Scale FbEq16	Volatile	Change running	Type

Attention: Any changed parameters must be validated by means of 51.27 FBA A par refresh = Refresh.
Note: Since the DCT880 is not a drive, it is not possible to use e.g., the profile ABB DRIVES. Use transparent profile e.g., Trans16.
Example for Profibus-DP:

51. FBA A settings						
1	FBA type	Profibus-DP	NoUnit			None
2	Node address	3	NoUnit	0	126	0
3	Baud rate	0	NoUnit	0	12000	0
4	MSG type	Not detected	NoUnit			Not detected
5	Profile	Trans16	NoUnit			PROFIdrive
6	T16 scale	0	NoUnit	0	65535	0

51.01	FBA A type						
	Fieldbus adapter A type. Displays the type of the connected fieldbus adapter A module. 0: **None**; module is not found or is not properly connected or is disabled by 50.01 FBA A enable. 8: **FPBA-01**; 10: **FCAN-01**; 11: **FDNA-01**; 13: **FENA-11**; 19: **FB COMMON**; 22: **FSCA-01**; 25: **FECA-01**; 26: **FENA-21**; 29: **FCNA-01**; 31: **FEPL-02**; 34: **FPCA-01**; 35: **FPNO-21**; 36: **FEIP-21**; 37:**FMBT-21**;						
	0 … 485	-	-	1 = 1	y	n	Signal

51.02 … 51.26	FBA A Par2 … FBA A Par26						
	Fieldbus adapter A configuration parameter. Parameters 51.02 … 51.26 are adapter module specific. For more information, see the documentation of the fieldbus adapter module. **Note**: Not all of these parameters are necessarily in use.						
	0 … 65535	0	-	1 = 1	n	y	Parameter

51.27	FBA A par refresh						
	Fieldbus adapter A refresh. Validates any changed fieldbus adapter A module configuration settings The value reverts to Done automatically when the refresh is done. 0: **Done**; refreshing done. 1: **Refresh**; refreshing.						
	0 … 1	Done	-	1 = 1	y	n	Parameter

Index	Name						
	Text						
	Range	**Default**	**Unit**	**Scale FbEq16**	**Volatile**	**Change running**	**Type**
51.28	**FBA A par table ver**						
	Fieldbus adapter A parameter table revision. Displays the parameter table revision of the fieldbus adapter A module-mapping file (stored in the memory of the unit) in format axyz, where ax = major table revision number and yz = minor table revision number.						
	0000h … FFFFh	-	-	1 = 1	y	n	Signal
51.29	**FBA A unit type code**						
	Fieldbus adapter A unit type code. Displays the unit's type code in the fieldbus adapter A module-mapping file (stored in the memory of the unit).						
	0 … 65535	-	-	1 = 1	y	n	Signal
51.30	**FBA A mapping file ver**						
	Fieldbus adapter A mapping file revision. Displays the fieldbus adapter A module-mapping file revision stored in the memory of the unit in decimal format.						
	0 … 65535	-	-	1 = 1	y	n	Signal
51.31	**D2FBA A comm status**						
	Unit to fieldbus adapter A communication status. Displays the status of the fieldbus adapter A module communication. 0: **Not configured**; fieldbus adapter A is not configured. 1: **Initializing**; fieldbus adapter A is initializing. 2: **Time out**; a timeout has occurred in the communication between fieldbus adapter A and the unit. 3: **Configuration error**; fieldbus adapter A configuration error. Mapping file is not found in the file system of the unit, or mapping file upload has failed more than three times. 4: **Off-line**; fieldbus adapter A communication is off-line. 5: **On-line**; fieldbus adapter A communication is on-line, or fieldbus adapter A has been configured not to detect a communication break. For more information, see the documentation of the fieldbus adapter. 6: **Reset**; fieldbus adapter A is performing a hardware reset.						
	0 … 6	-	-	1 = 1	y	n	Signal
51.32	**FBA A comm SW ver**						
	Fieldbus adapter A, firmware patch and build versions. Displays the patch and build versions of the adapter module A firmware in format xxyy, where xx = patch version number and yy = build version number. **Example**: C802 = 200.02 (patch version 200, build version 2).						
	0000h … FFFFh	-	-	1 = 1	y	n	Signal
51.33	**FBA A appl SW ver**						
	Fieldbus adapter A, firmware major and minor versions. Displays the major and minor versions of the adapter module A firmware in format xyy, where x = major revision number and yy = minor revision number. **Example**: 300 = 3.00 (major version 3, minor version 00).						
	0000h … FFFFh	-	-	1 = 1	y	n	Signal

52 FBA A data in

Selection of data sent by fieldbus adapter A to the master (e.g., PLC).
Attention: Any changed parameters must be validated by means of 51.27 FBA A par refresh = Refresh.
Note: 32-bit values require two consecutive parameters. Whenever a 32-bit value is selected in a data parameter, the next parameter is automatically reserved.

Index	Name						
	Text						
	Range	Default	Unit	Scale FbEq16	Volatile	Change running	Type
52.01 … 52.12	FBA A data in1 … FBA A data in12						
	Fieldbus adapter A data from the unit to the master (e.g., PLC). Parameters 52.01 … 52.12 select data sent from the unit by fieldbus adapter A to the fieldbus controller (e.g., PLC). **Other**; source selection (10 ms update). 0: **None**; inactive. Disable FBA A data in. 4: **SW 16bit**; status word (16 bit) (2 ms update) via 50.09 FBA A SW transparent source. 5: **Act1 16bit**; actual value ACT1 (16 bit) (2 ms update) via 50.10 FBA A act1 transparent source. 6: **Act2 16bit**; actual value ACT2 (16 bit) (2 ms update) via 50.11 FBA A act2 transparent source. 15: **Act1 32bit**; actual value ACT1 (32 bits). 16: **Act2 32bit**; actual value ACT2 (32 bits).						
	0 … 16	None	-	1 = 1	n	y	Parameter

53 FBA A data out

Selection of data sent by the master (e.g., PLC) to fieldbus adapter A.
Attention: Any changed parameters must be validated by means of 51.27 FBA A par refresh = Refresh.
Note: 32-bit values require two consecutive parameters. Whenever a 32-bit value is selected in a data parameter, the next parameter is automatically reserved.

Index	Name						
	Text						
	Range	Default	Unit	Scale FbEq16	Volatile	Change running	Type
53.01 … 53.12	FBA A data out1						
	Fieldbus adapter A data from the master (e.g., PLC) to the unit. Parameters 53.01 … 53.12 select data sent from the fieldbus controller (e.g., PLC) by fieldbus adapter A to the unit. **Other**; source selection (10 ms update). 0: **None**; inactive. Disable FBA A data out. 1: **CW 16bit**; control word (16 bit) (2 ms update). Send to 06.03 FBA A transparent control word. 2: **Ref1 16bit**; reference REF1 (16 bit) (2 ms update). Send to 03.05 FBA A reference 1. 3: **Ref2 16bit**; reference REF2 (16 bit) (2 ms update). Send to 03.06 FBA A reference 2. 12: **Ref1 32bit**; reference REF1 (32 bits). 13: **Ref2 32bit**; reference REF2 (32 bits).						
	0 … 13	None	-	1 = 1	n	y	Parameter

54 FBA B settings

Description see group 51 FBA A settings.

55 FBA B data in

Description see group 52 FBA A data in.

56 FBA B data out

Description see group 53 FBA A data out.

58 Embedded fieldbus

Embedded fieldbus (EFB) configuration.

Index	Name						
	Text						
	Range	**Default**	**Unit**	**Scale FbEq16**	**Volatile**	**Change running**	**Type**
	Attention: Any changed parameters must be validated by means of 58.06 Communication control = Refresh settings.						
58.01	**Protocol enable**						
	Embedded fieldbus, enable/disable. Enables/disables the embedded fieldbus and selects the protocol to use. **Note**: When the embedded fieldbus interface is enabled, the device-to-device link in group 60 DDCS communication is disabled. 0: **None**; inactive, disable communication. 1: **Modbus RTU**; enable the embedded fieldbus. Modbus RTU protocol is used.						
	0 … 1	None	-	1 = 1	n	n	Parameter
58.02	**Protocol ID**						
	Embedded fieldbus, Protocol ID, and revision. Displays the protocol ID and revision. First 4 bits specify the protocol ID, last 12 bits specify the revision.						
	0000h … FFFFh	-	-	1 = 1	y	n	Signal
58.03	**Node address**						
	Embedded fieldbus, node address. Defines the node address of the unit for the embedded fieldbus communication. All units connected to the network must have a unique node address. **Notes:** – The address range for the embedded fieldbus is 1 … 247. – For units in a network, it is advisable to reserve 58.03 Node address = 1 for spare/replacement units. – Changes to 58.03 Node address take effect after the unit is rebooted or the new setting is validated by 58.06 Communication control.						
	0 … 255	1	-	1 = 1	n	y	Parameter
58.04	**Baud rate**						
	Embedded fieldbus, link speed. Defines the transfer rate of the embedded fieldbus link. Use the same setting as in the master station. **Note**: Changes to 58.04 Baud rate take effect after the unit is rebooted or the new setting is validated by 58.06 Communication control. 0: **Autodetect**; detects the speed automatically. 1: **4.8 kbps**; 4.8 kbit/s. 2: **9.6 kbps**; 9.6 kbit/s. 3: **19.2 kbps**; 19.2 kbit/s. 4: **38.4 kbps**; 38.4 kbit/s. 5: **57.6 kbps**; 57.6 kbit/s. 6: **76.8 kbps**; 76.8 kbit/s. 7: **115.2 kbps**; 115.2 kbit/s.						
	0 … 7	19.2 kbps	-	1 = 1	n	y	Parameter
58.05	**Parity**						
	Embedded fieldbus, parity bit and stop bits. Selects the type of parity bit and the number of stop bits. Use the same setting as in the master station. **Note**: Changes to 58.05 Parity take effect after the unit is rebooted or the new setting is validated by 58.06 Communication control. 0: **8 NONE 1**; eight data bits, no parity bit, one stop bit.						

Index	Name						
	Text						
	Range	**Default**	**Unit**	**Scale FbEq16**	**Volatile**	**Change running**	**Type**
	1: **8 NONE 2**; eight data bits, no parity bit, two stop bits. 2: **8 EVEN 1**; eight data bits, even parity bit, one stop bit. 3: **8 ODD 1**; eight data bits, odd parity bit, one stop bit.						
	0 … 3	8 EVEN 1	-	1 = 1	n	y	Parameter
58.06	**Communication control**						
	Embedded fieldbus, refresh command. Applies any changed embedded fieldbus settings or activates silent mode. The value reverts automatically to Enabled when the refresh is done. 0: **Enabled**; normal operation or refreshing done. 1: **Refresh settings**; refresh changed configuration settings of the embedded fieldbus. 2: **Silent Mode**; activate the silent mode. No messages are transmitted. Silent mode can be terminated by setting 58.06 Communication = Refresh settings.						
	0 … 2	Enabled	-	1 = 1	y	y	Parameter
58.07	**Communication diagnostics**						
	Embedded fieldbus, communication status word. Displays the status of the embedded fieldbus communication. Bit assignment:						

Bit	Name	Value	Remarks
0	Initialization failed	1	Embedded fieldbus initialization failed.
1	Address configuration error	1	Node address not allowed by protocol.
2	Silent mode	1	Unit is not allowed transmitting.
		0	Unit is allowed transmitting.
3	reserved		
4	Wiring error	1	Error detected: Possibly A/B wires swapped.
5	Parity error	1	Error detected: Check 58.04 Baud rate and 58.05 Parity.
6	Baud rate error	1	Error detected: Check 58.05 Parity and 58.04 Baud rate.
7	No bus activity	1	0 bytes received during the last 5 seconds.
8	No packets	1	0 packets (addressed to any device) detected during the last 5 seconds.
9	Noise or addressing error	1	Error detected: Interference or another unit with the same address is online.
10	Communication loss	1	0 packets addressed to the unit received within 58.16 Communication loss time.
11	CW/References loss	1	No control word or references received within 58.16 Communication loss time.
12	reserved		
13	reserved		
14	reserved		
15	reserved		

	0000h … FFFFh	-	-	1 = 1	y	n	Signal
58.08	**Received packets**						
	Embedded fieldbus, number of received packets addressed to the unit. Displays a count of valid packets addressed to the unit. During normal operation, this number increases constantly. Can be reset from the control panel by keeping Reset depressed for over 3 seconds.						
	0 … 4294967295	0	-	1 = 1	n	y	Parameter

Index	Name						
	Text						
	Range	**Default**	**Unit**	**Scale FbEq16**	**Volatile**	**Change running**	**Type**
58.09	**Transmitted packets**						
	Embedded fieldbus, number of transmitted packets. Displays a count of valid packets transmitted by the unit. During normal operation, this number increases constantly. Can be reset from the control panel by keeping Reset depressed for over 3 seconds.						
	0 … 4294967295	0	-	1 = 1	n	y	Parameter
58.10	**All packets**						
	Embedded fieldbus, number of all received packets. Displays a count of valid packets addressed to any unit on the bus. During normal operation, this number increases constantly. Can be reset from the control panel by keeping Reset depressed for over 3 seconds.						
	0 … 4294967295	0	-	1 = 1	n	y	Parameter
58.11	**UART errors**						
	Embedded fieldbus, number of UART errors. Displays a count of character errors received by the unit. An increasing count indicates a configuration problem on the bus. Can be reset from the control panel by keeping Reset depressed for over 3 seconds.						
	0 … 4294967295	0	-	1 = 1	n	y	Parameter
58.12	**CRC errors**						
	Embedded fieldbus, number of CRC errors. Displays a count of packets with a CRC error received by the unit. An increasing count indicates interference on the bus. Can be reset from the control panel by keeping Reset depressed for over 3 seconds.						
	0 … 4294967295	0	-	1 = 1	n	y	Parameter
58.14	**Communication loss action**						
	Embedded fieldbus, communication loss action. Selects how the unit reacts to an embedded fieldbus communication loss. **Note**: Changes to 58.14 Communication loss action take effect after the unit is rebooted or the new setting is validated by 58.06 Communication control. 0: **No action**; none, disable communication loss function. 1: **Fault**; the event generates fault 5225 EFB communication and the unit is disabled. This occurs only when the unit is controlled from the fieldbus. 2: **Warning**; the event generates warning 1224 EFB communication. The unit continues with the same current/voltage/power level it was operating at This occurs even though no control is expected from the fieldbus. **WARNING** Make sure that it is safe to continue operation in case of a communication break. 4: **Fault always**; the event generates fault 5225 EFB communication and the unit is disabled. This occurs even though no control is expected from the embedded fieldbus.						
	0 … 5	No action	-	1 = 1	n	y	Parameter
58.15	**Communication loss mode**						
	Embedded fieldbus, communication loss mode. Defines which message types reset the timeout counter detecting an embedded fieldbus communication loss. See 58.14 Communication loss action and 58.16 Communication loss time. **Note**: Changes to 58.15 Communication loss mode take effect after the unit is rebooted or the new setting is validated by 58.06 Communication control. 0: **None**; no resetting of the timeout counter. 1: **Any message**; any message addressed to the unit resets the timeout. 2: **Cw/Ref1/Ref2**; a write of the control word or a reference from the embedded fieldbus resets the timeout.						

Index	Name						
	Text						
	Range	**Default**	**Unit**	**Scale FbEq16**	**Volatile**	**Change running**	**Type**
	0 … 2	Cw/Ref1/Ref2	-	1 = 1	n	y	Parameter
58.16	**Communication loss time**						
	Embedded fieldbus, communication loss timeout. Defines the time delay for the embedded fieldbus communication loss before the action defined in 58.14 Communication loss action is executed. See also 58.15 Communication loss mode. **Note**: Changes to 58.16 Communication loss time take effect after the unit is rebooted or the new setting is validated by 58.06 Communication control.						
	0 … 32.5	0.3	s	10 = 1 s	n	y	Parameter
58.17	**Transmit delay**						
	Embedded fieldbus, minimum response delay. Defines a minimum response delay in addition to any fixed delay imposed by the protocol. **Note:** Changes to 58.17 Transmit delay take effect after the unit is rebooted or the new setting is validated by 58.06 Communication control.						
	0 … 32500	0	ms	1 = 1 ms	n	y	Parameter
58.18	**EFB control word**						
	Embedded fieldbus, raw control word. Displays the raw (unmodified) control word sent by the Modbus controller (e.g., PLC) to the unit. For debugging purposes.						
	00000000h … FFFFFFFFh	-	-	1 = 1	y	n	Signal
58.19	**EFB status word**						
	Embedded fieldbus, raw status word. Displays the raw (unmodified) status word sent by the unit to the Modbus controller (e.g., PLC). For debugging purposes.						
	00000000h … FFFFFFFFh	-	-	1 = 1	y	n	Signal
58.25	**Control profile**						
	Embedded fieldbus, control profile. Defines the control profile used by the protocol. **Note**: Changes to 58.25 Control profile take effect after the unit is rebooted or the new setting is validated by 58.06 Communication control. 2: **Transparent**; transparent profile (16-bit or 32-bit control word) with registers in the classic format.						
	2 … 2	Transparent	-	1 = 1	n	y	Parameter
58.26	**EFB ref1 type**						
	Embedded fieldbus, reference 1 type. Selects the type and scaling of 03.09 EFB reference 1 sent by the Modbus controller (e.g., PLC) to the embedded fieldbus. 1: **Transparent**; No scaling is applied. 2: **General**; Generic reference with a scaling of 100 = 1 (e.g., integer and two decimals).						
	1 … 2	Transparent	-	1 = 1	n	y	Parameter
58.27	**EFB ref2 type**						
	Embedded fieldbus, reference 2 type. Selects the type and scaling of 03.10 EFB reference 2 sent by the Modbus controller (e.g., PLC) to the embedded fieldbus. See 58.26 EFB ref1 type.						
	1 … 2	Transparent	-	1 = 1	n	y	Parameter
58.28	**EFB act1 type**						
	Embedded fieldbus, actual value 1 type. Selects the type/source and scaling of actual value 1 sent by the embedded fieldbus to the Modbus controller (e.g., PLC). 1: **Transparent**; The value selected by 58.31 EFB act1 transparent source is sent as actual value 1. No scaling is applied. The 16-bit scaling is 1 = 1 unit.						

Index	Name						
	Text						
	Range	**Default**	**Unit**	**Scale FbEq16**	**Volatile**	**Change running**	**Type**
	2: **General**; The value selected by parameter 58.31 EFB act1 transparent source is sent as actual value 1 with a 16-bit scaling of 100 = 1 unit (e.g., integer and two decimals).						
	1 … 2	Transparent	-	1 = 1	n	y	Parameter
58.29	**EFB act2 type**						
	Embedded fieldbus, actual value 2 type. Selects the type/source and scaling of actual value 2 sent by the embedded fieldbus to the Modbus controller (e.g., PLC). See 58.28 EFB act1 type.						
	1 … 2	Transparent	-	1 = 1	n	y	Parameter
58.30	**EFB status word transparent source**						
	Embedded fieldbus, status word transparent source. Selects the source for the status word. **Other**; source selection e.g., 06.13 Global Status Word. 0: **Not selected**; no source selected.						
	0 … 0	Not selected	-	1 = 1	n	y	Parameter
58.31	**EFB act1 transparent source**						
	Embedded fieldbus, actual value 1 transparent source. Selects the source of actual value 1 sent by the embedded fieldbus to the Modbus controller (e.g., PLC). **Other**; source selection e.g., a value from group 1. 0: **Not selected**; no source selected.						
	0 … 0	Not selected	-	1 = 1	n	y	Parameter
58.32	**EFB act2 transparent source**						
	Embedded fieldbus, actual value 2 transparent source. Selects the source of actual value 2 sent by the embedded fieldbus to the Modbus controller (e.g., PLC). **Other**; source selection e.g., a value from group 1. 0: **Not selected**; no source selected.						
	0 … 0	Not selected	-	1 = 1	n	y	Parameter
58.33	**Addressing mode**						
	Embedded fieldbus, addressing mode. Defines the mapping between parameters and holding registers in the 400101 … 465535 Modbus register range. **Note**: Changes to 58.33 Addressing mode take effect after the unit is rebooted or the new setting is validated by 58.06 Communication control. 0: **Mode 0**; 16-bit values (groups 1 … 99, indexes 1 … 99): Register address = 400000 + 100 × parameter group + parameter index. For example, parameter 22.80 would be mapped to register 400000 + 2200 + 80 = 402280. 32-bit values (groups 1 … 99, indexes 1 … 99): Register address = 420000 + 200 × parameter group + 2 × parameter index. For example, parameter 22.80 would be mapped to register 420000 + 4400 + 160 = 424560. 1: **Mode 1**; 16-bit values (groups 1 … 255, indexes 1 … 255): Register address = 400000 + 256 × parameter group + parameter index. For example, parameter 22.80 would be mapped to register 400000 + 5632 + 80 = 405712. 2: **Mode 2**; 32-bit values (groups 1 … 127, indexes 1 … 255): Register address = 400000 + 512 × parameter group + 2 × parameter index. For example, parameter 22.80 would be mapped to register 400000 + 11264 + 160 = 411424.						

Index	Name						
	Text						
	Range	**Default**	**Unit**	**Scale FbEq16**	**Volatile**	**Change running**	**Type**
	0 … 2	Mode 0	-	1 = 1	n	y	Parameter
58.34	**Word order**						
	Embedded fieldbus, word order. Selects in which order 16-bit registers of 32-bit parameters are transferred. For each register, the first byte contains the high order byte, and the second byte contains the low order byte. Note: Changes to 58.34 Word order take effect after the unit is rebooted or the new setting is validated by 58.06 Communication control. 0: **HI-LO**; the 1st register contains the high order word. The 2nd register contains the low order word. 1: **LO-HI**; the 1st register contains the low order word. The 2nd register contains the high order word.						
	0 … 1	LO-HI	-	1 = 1	n	y	Parameter
58.101 to 58.124	**Data I/O 1 … Data I/O 24**						
	Embedded fieldbus, I/O data. Defines the address in the unit, which the Modbus master accesses when it reads from or writes to register address 400001 … 400024. The master defines the type of the data (input/ output). The value is transmitted in a Modbus frame consisting of two 16- bit words. If the value is 16-bit, it is transmitted in the LSW (least significant word). If the value is 32-bit, the subsequent parameter is also reserved for it and must be set to None. **Notes**: – Input means data transfer from the unit to the master (e.g., PLC). – Output means data transfer from the master (e.g., PLC) to the unit. **Other**; source selection (10 ms update). 0: **None**; inactive. Data I/O is disabled. 1: **CW 16bit**; control word (16-bit) (2 ms update). Taken from 06.08 Used main control word./Send to 06.01 Main control word. 2: **Ref1 16bit**; reference 1 REF1 (16-bit) (2 ms update). Taken from 03.09 EFB reference 1./Send to 03.09 EFB reference 1. 3: **Ref2 16bit**; reference 2 REF2 (16-bit) (2 ms update). Taken from 03.10 EFB reference 2./Send to 03.10 EFB reference 2. 4: **SW 16bit**; status word (16-bit) (2 ms update). Via 58.30 EFB status word transparent source./NA. 5: **Act1 16bit**; actual value 1 ACT1 (16-bit) (2 ms update). Depending on 58.28 EFB act1 type./NA. 6: **Act2 16bit**; actual value 2 ACT2 (16-bit) (2 ms update). Depending on 58.29 EFB act2 type./NA. 12: **Ref1 32bit**; reference 1 REF1 (32-bit) (2 ms update). Taken from 03.09 EFB reference 1./Send to 03.09 EFB reference 1. 13: **Ref2 32bit**; reference 2 REF2 (32-bit) (2 ms update). Taken from 03.10 EFB reference 2./Send to 03.10 EFB reference 2. 15: **Act1 32bit**; actual value 1 ACT1 (32-bit) (2 ms update). Depending on 58.28 EFB act1 type./NA. 16: **Act2 32bit**; actual value 2 ACT2 (32-bit) (2 ms update). Depending on 58.29 EFB act2 type./NA. 31: **RO/DIO control word**; see 10.99 RO/DIO control word. Taken from 10.99 RO/DIO control word./Send to 10.99 RO/DIO control word. 32: **AO1 data storage**; see 13.91 AO1 data storage. Taken from 13.91 AO1 data storage./Send to 13.91 AO1 data storage. 33: **AO2 data storage**; see 13.92 AO2 data storage. Taken from 13.92 AO2 data storage./Send to 13.92 AO2 data storage.						
	0 … 33	None	-	1 = 1	n	y	Parameter

60 DDCS communication

DDCS communication configuration.
The DDCS protocol is used in the communication between:
- Units in a master-follower link configuration.
- Units and a DDCS controller such as an AC 800M.

All of the above utilize a fiber optic link, which requires FDCO modules. Master-follower link and DDCS controller communication can also be implemented through shielded twisted-pair cable via connector XD2D (device-to-device link) of the unit.

Index	Name						
	Text						
	Range	Default	Unit	Scale FbEq16	Volatile	Change running	Type
60.01	M/F communication port						
	Master-follower link, communication port. Selects the connection used by the master-follower link. 0: **Not in use**; not in use, disable communication. 1: **Slot 1A**; activates channel A on the FDCO-0x which is in slot 1. 2: **Slot 2A**; activates channel A on the FDCO-0x which is in slot 2. 3: **Slot 3A**; activates channel A on the FDCO-0x which is in slot 3. 4: **Slot 1B**; activates channel B on the FDCO-0x which is in slot 1. 5: **Slot 2B**; activates channel B on the FDCO-0x which is in slot 2. 6: **Slot 3B**; activates channel B on the FDCO-0x which is in slot 3. 7: **XD2D**; activates connector XD2D.						
	0 … 7	Not in use	-	1 = 1	n	y	Parameter
60.02	M/F node address						
	Master-follower link, node address. Defines the node address of the unit for master-follower link. Two units with the same node address are not allowed. **Notes:** – The allowable address for the master is 1. – The allowable addresses for followers are 2 … 60.						
	1 … 254	1	-	1 = 1	n	y	Parameter
60.03	M/F mode						
	Master-follower link, mode. Defines the role of the unit on the master-follower link. 0: **Not in use**; not in use, disable master-follower link. 1: **FDCO-XD2D Master**; the unit is the master on the master-follower link either via FDCO-0x or via connector XD2D. 2: **FDCO-XD2D Follower**; the unit is a follower on the master-follower link either via FDCO-0x or via connector XD2D. 3: **ApplPrg Master**; reserved. 4: **ApplPrg Follower**; reserved. 5: **FDCO-XD2D forcing**; the role of the unit on the master-follower link is defined by 60.15 Force master and 60.16 Force follower. 6: **ApplPrg forcing**; reserved.						
	0 … 6	Not in use	-	1 = 1	n	y	Parameter
60.05	M/F HW connection						
	Master-follower link, hardware connection. Selects the topology of the master-follower link. 0: **Ring**; the units are connected in a ring topology. Forwarding of messages is enabled. Not to be set when using connector XD2D. 1: **Star**; the units are connected in a star topology, e.g., through a branching unit. Forwarding of messages is disabled. To be set when using connector XD2D.						
	0 … 1	Ring	-	1 = 1	n	y	Parameter

Index	Name						
	Text						
	Range	Default	Unit	Scale FbEq16	Volatile	Change running	Type
60.08	**M/F comm loss timeout**						
	Master-follower link, communication loss timeout. Defines the time delay for the master-follower link before the action defined in 60.09 M/F comm loss function is executed.						
	0 … 65535	100	ms	1 = 1 ms	n	y	Parameter
60.09	**M/F comm loss function**						
	Master-follower link, communication loss action. Selects how the unit reacts to a master-follower link loss. 0: **No action**; none, disable communication loss function. 1: **Warning**; the event generates warning 1223 Master-follower link communication. The unit continues with the same current/voltage/power level it was operating at. This occurs only when the unit is controlled from the master-follower link. **WARNING** Make sure that it is safe to continue operation in case of a communication break. 2: **Fault**; the event generates fault 5228 Master-follower link communication, and the unit is disabled. This occurs only when the unit is controlled from the master-follower link. 3: **Fault always**; the event generates fault 5228 Master-follower link communication, and the unit is disabled. This occurs even though no control is expected from the master-follower link.						
	0 … 3	Fault	-	1 = 1	n	y	Parameter
60.14	**M/F follower selection**						
	Master-follower link, follower supervision selection (master only). Defines the supervised followers. Reaction see 60.17 Follower fault action. **Note**: Wrong setting of 60.14 M/F follower selection causes either warning 1223 Master-follower link communication or fault 5228 Master-follower link communication depending on 60.09 M/F comm loss function. 0: **Broadcast**; supervision is disabled. 2: **Follower node 2**; data is read from follower node 2, supervision is enabled. 4: **Follower node 3**; data is read from follower node 3, supervision is enabled. 6: **Follower node 2+3**; data is read from followers' node 2 and 3, supervision is enabled. 8: **Follower node 4**; data is read from follower node 4, supervision is enabled. 10: **Follower node 2+4**; data is read from followers' node 2 and 4, supervision is enabled. 12: **Follower node 3+4**; data is read from followers' node 3 and 4, supervision is enabled. 14: **Follower node 2+3+4**; data is read from followers' node 2, 3 and 4, supervision is enabled.						
	0 … 14	Broadcast	-	1 = 1	n	y	Parameter
60.15	**Force master**						
	Master-follower link, force master. In case 60.03 M/F mode is set to FDCO-XD2D forcing or ApplPrg forcing, 60.15 Force master selects a source that forces the unit to be the master on the master-follower link. 0 = Unit is not the master on the master-follower link. 1 = Unit is the master on the master-follower link. **Other [bit]**; source selection. 0: **False**; 0, not the master. 1: **True**; 1, the master.						
	0 … 1	False	-	1 = 1	n	y	Parameter
60.16	**Force follower**						
	Master-follower link, force follower. In case 60.03 M/F mode is set to FDCO-XD2D forcing or ApplPrg forcing, 60.16 Force follower selects a source that forces the unit to be a follower on the master-follower link. 0 = Unit is not a follower on the master-follower link. 1 = Unit is a follower on the master-follower link. **Other [bit]**; source selection.						

Index	Name						
	Text						
	Range	**Default**	**Unit**	**Scale FbEq16**	**Volatile**	**Change running**	**Type**
	0: **False**; 0, not a follower. 1: **True**; 1, a follower.						
	0 … 1	False	-	1 = 1	n	y	Parameter
60.17	**Follower fault action**						
	Master-follower link, follower fault action (master only). Selects how the master reacts to a faulty follower on the master-follower link. 0: **No action**; no action taken. Unaffected units on the master-follower link will continue running. 1: **Warning**; the event generates warning AFE7 Follower in the master. Unaffected units on the master-follower link will continue running. 2: **Fault**; the event generates fault FF7E Follower in the master and all units are disabled. **Note**: Each follower to be supervised must be configured to feed 06.93 Follower Status Word back to the master. Thus: – In all followers one of the three data words in parameters 61.01 … 61.03 must be set to 06.93 Follower Status Word. – In the master the corresponding target parameter 62.04 … 62.14 must be set to Follower SW.						
	0 … 2	Fault	-	1 = 1	n	y	Parameter
60.18	**Follower enable**						
	Master-follower link, follower enable action (master only). Interlocks the starting of the master depending on the status of all followers on the master-follower link. 0: **FSW bit 0**; the master can only be started if all followers are Ready for On, see 06.93.b00 Follower Status Word. 1: **FSW bit 1**; the master can only be started if all followers are Enabled, see 06.93.b01 Follower Status Word. 2: **FSW bits 0 + 1**, the master can only be started if all followers are Ready for On and Enabled, see 06.93.b00 Follower Status Word and 06.93.b01 Follower Status Word. 3: **Always**; the starting of the master is not interlocked by the status of any follower. **Note**: Each follower to be supervised must be configured to feed 06.93 Follower Status Word back to the master. Thus: – In all followers one of the three data words in parameters 61.01 … 61.03 must be set to 06.93 Follower Status Word. – In the master the corresponding target parameter 62.04 … 62.14 must be set to Follower SW.						
	0 … 3	Always	-	1 = 1	n	y	Parameter
60.31	**M/F wake up delay**						
	Master-follower link, wake-up delay. Defines a wake-up delay during which no master-follower communication faults or warnings can be generated. This is to allow all units on the master-follower link to power up without causing nuisance events. The master cannot be started until the delay elapses, or all monitored followers are Ready for On, see 06.93.b00 Follower Status Word.						
	0.0 … 180.0	10.0	s	10 = 1 s	n	y	Parameter
60.41	**Extension adapter com port**						
	FEA-03 extension adapter communication port. Selects the connection used by the FEA-03 extension adapter. 0: **Not in use**; not in use, disable communication. 1: **Slot 1A**; activates channel A on the FDCO-0x which is in slot 1. 2: **Slot 2A**; activates channel A on the FDCO-0x which is in slot 2. 3: **Slot 3A**; activates channel A on the FDCO-0x which is in slot 3. 4: **Slot 1B**; activates channel B on the FDCO-0x which is in slot 1. 5: **Slot 2B**; activates channel B on the FDCO-0x which is in slot 2.						

Index	Name						
	Text						
	Range	**Default**	**Unit**	**Scale FbEq16**	**Volatile**	**Change running**	**Type**
	6: **Slot 3B**; activates channel B on the FDCO-0x which is in slot 3.						
	0 … 6	Not in use	-	1 = 1	n	y	Parameter
60.50	**DDCS controller drive type**						
	DDCS controller link, communication type of unit. In ModuleBus communication, defines whether the unit is of “engineered” or “standard” type. 0: **ABB engineered drive**; the unit is an “engineered unit” (data sets 10 … 25 are used). 1: **ABB standard drive**; the unit is a “standard unit” (data sets 1 … 4 are used).						
	0 … 1	ABB engineered drive	-	1 = 1	n	y	Parameter
60.51	**DDCS controller comm port**						
	DDCS controller link, communication port. Selects the connection used by a DDCS controller (such as an AC 800M). 0: **Not in use**; not in use, communication is disabled. 1: **Slot 1A**; activates channel A on the FDCO-0x which is in slot 1. 2: **Slot 2A**; activates channel A on the FDCO-0x which is in slot 2. 3: **Slot 3A**; activates channel A on the FDCO-0x which is in slot 3. 4: **Slot 1B**; activates channel B on the FDCO-0x which is in slot 1. 5: **Slot 2B**; activates channel B on the FDCO-0x which is in slot 2. 6: **Slot 3B**; activates channel B on the FDCO-0x which is in slot 3. 7: **XD2D**; activates connector XD2D.						
	0 … 7	Not in use	-	1 = 1	n	n	Parameter
60.52	**DDCS controller node address**						
	DDCS controller link, node address. Defines the node address of the unit for the DDCS controller. Two units with the same node address are not allowed. DriveBus connection: – AC 800M with CI858, units must be addressed from 1 … 24. – AC 80, units must be addressed from 1 … 12. Optical ModuleBus: AC 800M, units must be addressed the following way: 3. Multiply the hundreds of the position value by 16. 4. Add the tens and ones of the position value to the result. Examples: Position value: 101 — 60.52 DDCS controller node address: 16 x 1 + 01 = 17 Position value: 712 — 60.52 DDCS controller node address: 16 x 7 + 12 = 124 – AC 80 with TB810 or TB811, units must be addressed the following way: 1. Multiply the hundreds of the position value by 16. 2. Add the tens and ones of the position value to the result. Examples: Position value: 101 — 60.52 DDCS controller node address: 16 x 1 + 01 = 17 Position value: 712 — 60.52 DDCS controller node address: 16 x 7 + 12 = 124						
	1 … 254	1	-	1 = 1	n	n	Parameter
60.55	**DDCS controller HW connection**						
	DDCS controller link, hardware connection. Selects the topology of the DDCS controller link. 0: **Ring**; The units are connected in a ring topology. Forwarding of messages is enabled.						

Index	Name						
	Text						
	Range	**Default**	**Unit**	**Scale FbEq16**	**Volatile**	**Change running**	**Type**
	1: **Star**; The units are connected in a star topology, e.g., through a branching unit. Forwarding of messages is disabled.						
	0 … 1	Star	-	1 = 1	n	n	Parameter
60.56	**DDCS controller baud rate**						
	DDCS controller link, link speed. Selects the communication speed of the DDCS controller link channel selected by 60.51 DDCS controller comm port. 1: **1 Mbps**; 1 Mbit/s. 2: **2 Mbps**; 2 Mbit/s. 4: **4 Mbps**; 4 Mbit/s. 8: **8 Mbps**; 8 Mbit/s.						
	1 … 8	4 Mbps	-	1 = 1	n	y	Parameter
60.58	**DDCS controller comm loss time**						
	DDCS controller link, loss timeout. Defines the time delay for the DDCS controller link loss before the action defined in 60.59 DDCS controller comm loss function is executed. **Notes:** – 60.58 DDCS controller comm loss time should be set to at least 3 times the transmit interval of the DDCS controller. – There is a 60-second boot-up delay immediately after power-up of the unit. During the delay, the communication loss function is disabled, but communication itself can be active. – The AC 800M immediately detects a communication break. Re-establishing the communication is done at 9-second idle intervals. – The sending interval of a data set is different from the execution interval of the application task. When using ModuleBus, the sending interval is defined by the DDCS controller parameter Scan Cycle Time (by default, 100 ms).						
	0 … 65535	100	ms	1 = 1 ms	n	y	Parameter
60.59	**DDCS controller comm loss function**						
	DDCS controller link, loss action. Selects how the unit reacts to a DDCS controller link loss. 0: **No action**; none, disable communication loss function. 1: **Fault**; the event generates fault 7581 DDCS controller comm loss and the unit is disabled. This occurs only when the unit is controlled from the DDCS controller link. 4: **Fault always**; the event generates fault 7581 DDCS controller comm loss and the unit is disabled. This occurs even though no control is expected from the DDCS controller link. 5: **Warning**; the event generates warning A7CA DDCS controller comm loss. The unit continues with the same current/voltage/power level it was operating at. This occurs only when the unit is controlled from the DDCS controller link. **WARNING** Make sure that it is safe to continue operation in case of a communication break.						
	0 … 5	No action	-	1 = 1	n	y	Parameter
60.64	**Mailbox data set selection**						
	DDCS controller link, mailbox data set selection. Selects the pair of data sets used by the mailbox service in the DDCS controller link. See chapter DDCS controller interface. 0: **Data set 32/33**; data sets 32 and 33 are dedicated for the mailbox service. 1: **Data set 24/25**; Data sets 24 and 25 are dedicated for the mailbox service.						
	0 … 1	Data set 32/33	-	1 = 1	n	y	Parameter

Index	Name						
	Text						
	Range	Default	Unit	Scale FbEq16	Volatile	Change running	Type
60.85	IEC application D2D baud rate						
	IEC application via D2D link, link speed. Selects the communication speed between IEC applications using the drive-to-drive link channel selected by 60.01 M/F communication port. 1: 1 **Mbps**; 1 Mbit/s. 2: **2 Mbps**; 2 Mbit/s. 4: **4 Mbps**; 4 Mbit/s. 8: **8 Mbps**; 8 Mbit/s.						
	1 … 8	8 Mbps	-	1 = 1	n	y	Parameter
60.104	DT comm port						
	reserved						
	0 … 14	Not in use	-	1 = 1	n	n	Parameter

61 D2D and DDCS transmit data

Defines the data sent from the unit to the DDCS/D2D link.

Index	Name						
	Text						
	Range	Default	Unit	Scale FbEq16	Volatile	Change running	Type
61.01	M/F data 1 selection						
	Master-follower link, data 1 from the unit to the master-follower link. Selects data sent as word 1 from the unit to the master-follower link. The value is visible in 61.25 M/F data 1 value. **Other**; source selection. 0: **None**; inactive.						
	0 … 0	None	-	1 = 1	n	y	Parameter
61.02	M/F data 2 selection						
	Master-follower link, data 2 from the unit to the master-follower link. Selects data sent as word 2 from the unit to the master-follower link. The value is visible in 61.26 M/F data 2 value. See 61.01 M/F data 1 selection.						
	0 … 0	None	-	1 = 1	n	y	Parameter
61.03	M/F data 3 selection						
	Master-follower link, data 3 from the unit to the master-follower link. Selects data sent as word 3 from the unit to the master-follower link. The value is visible in 61.27 M/F data 3 value. See 61.01 M/F data 1 selection.						
	0 … 0	None	-	1 = 1	n	y	Parameter
61.25	M/F data 1 value						
	Master-follower link, data 1 value from the unit to the master-follower link. Shows the value sent as word 1 to the master-follower link as integer. If no data has been preselected by 61.01 M/F data 1 selection, the value to be sent can be written directly into 61.25 M/F data 1 value.						
	0 … 65535	-	-	1 = 1	y	n	Signal
61.26	M/F data 2 value						
	Master-follower link, data 2 value from the unit to the master-follower link. Shows the value sent as word 2 to the master-follower link as integer. If no data has been preselected by 61.02 M/F data 2 selection, the value to be sent can be written directly into 61.26 M/F data 2 value.						
	0 … 65535	-	-	1 = 1	y	n	Signal

Index	Name						
	Text						
	Range	**Default**	**Unit**	**Scale FbEq16**	**Volatile**	**Change running**	**Type**
61.27	**M/F data 3 value**						
	Master-follower link, data 3 value from the unit to the master-follower link. Shows the value sent as word 3 to the master-follower link as integer. If no data has been preselected by 61.03 M/F data 3 selection, the value to be sent can be written directly into 61.27 M/F data 3 value.						
	0 … 65535	-	-	1 = 1	y	n	Signal
	Parameters 61.45 … 61.50 select data sent from the unit, in data sets 2 and 4, to the DDCS controller. These data sets are used in communication with 60.50 DDCS controller drive type = ABB standard drive. Signals 61.95 … 61.100 display the data to be sent to the DDCS controller in integer format. If no data has been preselected, the value to be sent can be written directly into these signals. **Example**: 61.45 Data set 2 data 1 selection preselects the data for data set 2 word 1. 61.95 Data set 2 data 1 value displays the selected data in integer format. If no data is preselected, the value to be sent can be written directly into 61.95 Data set 2 data 1 value.						
61.45	**Data set 2 data 1 selection**						
	DDCS controller link, data set 2 data 1 from the unit to the DDCS controller link. Select data sent as data set 2 data 1 from the unit to the DDCS controller link. The value is visible in 61.95 Data set 2 data 1 value. **Other**; source selection. 0: **None**; inactive. Disable DDCS controller link data in. 4: **SW 16bit**; status word (16-bit). Taken from 06.13 Global Status Word. 5: **Act1 16bit**; actual value 1 ACT1 (16-bit). 6: **Act2 16bit**; actual value 2 ACT2 (16-bit).						
	0 … 6	None	-	1 = 1	n	y	Parameter
61.46	**Data set 2 data 2 selection**						
	DDCS controller link, data set 2 data 2 from the unit to the DDCS controller link. Select data sent as data set 2 data 2 from the unit to the DDCS controller link. The value is visible in 61.96 Data set 2 data 2 value. See 61.45 Data set 2 data 1 selection.						
	0 … 6	None	-	1 = 1	n	y	Parameter
61.47 … 61.50	**Data set 2 data 3 selection … Data set 4 data 3 selection**						
	See 61.45 Data set 2 data 1 selection.						
	0 … 6	None	-	1 = 1	n	y	Parameter
	Parameters 61.51 … 61.74 select data sent from the unit, in data sets 11, 13, 15, 17, 19, 21, 23 and 25, to the DDCS controller. These data sets are used in communication with 60.50 DDCS controller drive type = ABB engineered drive. The update intervals of the data sets are as follows: – Data sets 10 and 11: 2 ms. – Data sets 12 and 13: 4 ms. – Data sets 14 … 17: 10 ms. – Data sets 18 … 25, 32 and 33: 100 ms. Signals 61.101 … 61.124 display the data to be sent to the DDCS controller in integer format. If no data has been preselected, the value to be sent can be written directly into these signals. **Example**: 61.51 Data set 11 data 1 selection preselects the data for data set 11 word 1. 61.101 Data set 11 data 1 value displays the selected data in integer format. If no data is preselected, the value to be sent can be written directly into 61.101 Data set 11 data 1 value.						
61.51	**Data set 11 data 1 selection**						
	DDCS controller link, data set 11 data 1 from the unit to the DDCS controller link. Select data sent as data set 11 data 1 from the unit to the DDCS controller link. The value is visible in 61.101 Data set 11 data 1 value.						

Index	Name						
	Text						
	Range	**Default**	**Unit**	**Scale FbEq16**	**Volatile**	**Change running**	**Type**
	Other; source selection. 0: **None**; inactive. Disable DDCS controller link data in. 4: **SW 16bit**; status word (16-bit). Taken from 06.13 Global Status Word. 5: **Act1 16bit**; actual value 1 ACT1 (16-bit). 6: **Act2 16bit**; actual value 2 ACT2 (16-bit).						
	0 … 6	None	-	1 = 1	n	y	Parameter
61.52	**Data set 11 data 2 selection**						
	DDCS controller link, data set 11 data 2 from the unit to the DDCS controller link. Select data sent as data set 11 data 2 from the unit to the DDCS controller link. The value is visible in 61.102 Data set 11 data 2 value. See 61.51 Data set 11 data 1 selection.						
	0 … 6	None	-	1 = 1	n	y	Parameter
61.53 … 61.74	**Data set 11 data 3 selection … Data set 25 data 3 selection**						
	See 61.51 Data set 11 data 1 selection.						
	0 … 6	None	-	1 = 1	n	y	Parameter
61.95	**Data set 2 data 1 value**						
	DDCS controller link, data set 2 data 1 from the unit to the DDCS controller link. Shows the value sent as data set 2 data 1 to the DDCS controller link as integer. If no data has been preselected by 61.45 Data set 2 data 1 selection, the value to be sent can be written directly into 61.95 Data set 2 data 1 value.						
	0 … 65535	-	-	1 = 1	y	n	Signal
61.96	**Data set 2 data 2 value**						
	DDCS controller link, data set 2 data 2 from the unit to the DDCS controller link. Shows the value sent as data set 2 data 2 to the DDCS controller link as integer. If no data has been preselected by 61.46 Data set 2 data 2 selection, the value to be sent can be written directly into 61.96 Data set 2 data 2 value.						
	0 … 65535	-	-	1 = 1	y	n	Signal
61.97 … 61.100	**set 2 data 3 value … Data set 4 data 3 value**						
	See 61.95 Data set 2 data 1 value.						
	0 … 65535	-	-	1 = 1	y	n	Signal
61.101	**Data set 11 data 1 value**						
	DDCS controller link, data set 11 data 1 from the unit to the DDCS controller link. Shows the value sent as data set 11 data 1 to the DDCS controller link as integer. If no data has been preselected by 61.51 Data set 11 data 1 selection, the value to be sent can be written directly into 61.101 Data set 11 data 1 value.						
	0 … 65535	-	-	1 = 1	y	n	Signal
61.102	**Data set 11 data 2 value**						
	DDCS controller link, data set 11 data 2 from the unit to the DDCS controller link. Shows the value sent as data set 11 data 2 to the DDCS controller link as integer. If no data has been preselected by 61.52 Data set 11 data 2 selection, the value to be sent can be written directly into 61.102 Data set 11 data 2 value.						
	0 … 65535	-	-	1 = 1	y	n	Signal
61.103 … 61.124	**Data set 11 data 3 value … Data set 25 data 3 value**						
	See 61.101 Data set 11 data 1 value.						
	0 … 65535	-	-	1 = 1	y	n	Signal

62 D2D and DDCS receive data

Defines the data sent from the DDCS/D2D link to the unit.

Index	Name						
	Text						
	Range	**Default**	**Unit**	**Scale FbEq16**	**Volatile**	**Change running**	**Type**
62.01	**M/F data 1 selection**						
	Master-follower link, data 1 from the master via master-follower link to the followers (followers only). Selects data sent as word 1 from the master via master-follower link to the followers. The value is visible in 62.25 MF/D2D data 1 value. **Other**; source selection. 0: **None**; inactive. 1: **CW 16bit**; control word (16 bit). Send to 06.94 Follower Control Word received. 2: **Ref1 16bit**; reference REF1 (16 bit). Send to 03.13 M/F or D2D ref1. 3: **Ref2 16bit**; reference REF2 (16 bit). Send to 03.14 M/F or D2D ref2.						
	0 … 3	CW 16bit	-	1 = 1	n	y	Parameter
62.02	**M/F data 2 selection**						
	Master-follower link, data 2 from the master via master-follower link to the followers (followers only). Selects data sent as word 2 from the master via master-follower link to the followers. The value is visible in 62.26 MF/D2D data 2 value. See 62.01 M/F data 1 selection.						
	0 … 3	Ref1 16bit	-	1 = 1	n	y	Parameter
62.03	**M/F data 3 selection**						
	Master-follower link, data 3 from the master via master-follower link to the followers (followers only). Selects data sent as word 3 from the master via master-follower link to the followers The value is visible in 62.27 MF/D2D data 3 value. See 62.01 M/F data 1 selection.						
	0 … 3	Ref2 16bit	-	1 = 1	n	y	Parameter
62.04	**Follower node 2 data 1 sel**						
	Master-follower link, data 1 from follower node 2 via master-follower link to the master (master only). Selects data sent as word 1 from follower node 2 via master-follower link to the master. The value is visible in 62.28 Follower node 2 data 1 value. **Other**; source selection. 0: **None**; inactive. 26: **Follower SW**; follower status word node 2 (16-bit). 06.13 Global Status Word received from follower node 2. See 60.18 Follower enable.						
	0 … 26	none	-	1 = 1	n	y	Parameter
62.05	**Follower node 2 data 2 sel**						
	Master-follower link, data 2 from follower node 2 via master-follower link to the master (master only). Selects data sent as word 2 from follower node 2 via master-follower link to the master The value is visible in 62.29 Follower node 2 data 2 value. See 62.04 Follower node 2 data 1 sel.						
	0 … 26	none	-	1 = 1	n	y	Parameter
62.06	**Follower node 2 data 3 sel**						
	Master-follower link, data 3 from follower node 2 via master-follower link to the master (master only). Selects data sent as word 3 from follower node 2 via master-follower link to the master. The value is visible in 62.30 Follower node 2 data 3 value. See 62.04 Follower node 2 data 1 sel.						
	0 … 26	None	-	1 = 1	n	y	Parameter

Index	Name						
	Text						
	Range	Default	Unit	Scale FbEq16	Volatile	Change running	Type
62.07	**Follower node 3 data 1 sel**						
	Master-follower link, data 1 from follower node 3 via master-follower link to the master (master only). Selects data sent as word 1 from follower node 3 via master-follower link to the master. The value is visible in 62.31 Follower node 3 data 1 value. **Other**; source selection. 0: **None**; inactive. 26: **Follower SW**; follower status word node 3 (16-bit). 06.13 Global Status Word received from follower node 3. See 60.18 Follower enable.						
	0 … 26	None	-	1 = 1	n	y	Parameter
62.08	**Follower node 3 data 2 sel**						
	Master-follower link, data 2 from follower node 3 via master-follower link to the master (master only). Selects data sent as word 2 from follower node 3 via master-follower link to the master. The value is visible in 62.32 Follower node 3 data 2 value. See 62.07 Follower node 3 data 1 sel.						
	0 … 26	None	-	1 = 1	n	y	Parameter
62.09	**Follower node 3 data 3 sel**						
	Master-follower link, data 3 from follower node 3 via master-follower link to the master (master only). Selects data sent as word 3 from follower node 3 via master-follower link to the master. The value is visible in 62.33 Follower node 3 data 3 value. See 62.07 Follower node 3 data 1 sel.						
	0 … 26	None	-	1 = 1	n	y	Parameter
62.10	**Follower node 4 data 1 sel**						
	Master-follower link, data 1 from follower node 4 via master-follower link to the master (master only). Selects data sent as word 1 from follower node 4 via master-follower link to the master. The value is visible in 62.34 Follower node 4 data 1 value. **Other**; source selection. 0: **None**; inactive. 26: **Follower SW**; follower status word node 4 (16-bit). 06.13 Global Status Word received from follower node 4. See 60.18 Follower enable.						
	0 … 26	Follower SW	-	1 = 1	n	y	Parameter
62.11	**Follower node 4 data 2 sel**						
	Master-follower link, data 2 from follower node 4 via master-follower link to the master (master only). Selects data sent as word 2 from follower node 4 via master-follower link to the master. The value is visible in 62.35 Follower node 4 data 2 value. See 62.10 Follower node 3 data 1 sel.						
	0 … 26	None	-	1 = 1	n	y	Parameter
62.12	**Follower node 4 data 3 sel**						
	Master-follower link, data 3 from follower node 4 via master-follower link to the master (master only). Selects data sent as word 3 from follower node 4 via master-follower link to the master. The value is visible in 62.36 Follower node 4 data 3 value. See 62.10 Follower node 3 data 1 sel.						
	0 … 26	None		1 = 1	n	y	Parameter
62.25	**MF data 1 value**						
	Master-follower link, data 1 value from the master via master-follower link to the followers (followers only).						

Index	Name						
	Text						
	Range	**Default**	**Unit**	**Scale FbEq16**	**Volatile**	**Change running**	**Type**
	Shows the value sent as word 1 from the master via master-follower link to the followers as integer by 62.01 M/F data 1 selection. Can also be used as source by other parameters.						
	0 … 65535	-	-	1 = 1	y	n	Signal
62.26	**MF data 2 value**						
	Master-follower link, data 2 value from the master via master-follower link to the followers (followers only). Shows the value sent as word 2 from the master via master-follower link to the followers as integer by 62.02 M/F data 2 selection. Can also be used as source by other parameters.						
	0 … 65535	-	-	1 = 1	y	n	Signal
62.27	**MF data 3 value**						
	Master-follower link, data 3 value from the master via master-follower link to the followers (followers only). Shows the value sent as word 3 from the master via master-follower link to the followers as integer by 62.03 M/F data 3 selection. Can also be used as source by other parameters.						
	0 … 65535	-	-	1 = 1	y	n	Signal
62.28	**Follower node 2 data 1 value**						
	Master-follower link, data 1 value from follower node 2 via master-follower link to the master (master only). Shows the value sent as word 1 from follower node 2 via master-follower link to the master as integer by 62.04 Follower node 2 data 1 sel. Can also be used as source by other parameters.						
	0 … 65535	-	-	1 = 1	y	n	Signal
62.29	**Follower node 2 data 2 value**						
	Master-follower link, data 2 value from follower node 2 via master-follower link to the master (master only). Shows the value sent as word 2 from follower node 2 via master-follower link to the master as integer by 62.05 Follower node 2 data 2 sel. Can also be used as source by other parameters.						
	0 … 65535	-	-	1 = 1	y	n	Signal
62.30	**Follower node 2 data 3 value**						
	Master-follower link, data 3 value from follower node 2 via master-follower link to the master (master only). Shows the value sent as word 3 from follower node 2 via master-follower link to the master as integer by 62.06 Follower node 2 data 3 sel. Can also be used as source by other parameters.						
	0 … 65535	-	-	1 = 1	y	n	Signal
62.31	**Follower node 3 data 1 value**						
	Master-follower link, data 1 value from follower node 3 via master-follower link to the master (master only). Shows the value sent as word 1 from follower node 3 via master-follower link to the master as integer by 62.07 Follower node 3 data 1 sel. Can also be used as source by other parameters.						
	0 … 65535	-	-	1 = 1	y	n	Signal
62.32	**Follower node 3 data 2 value**						
	Master-follower link, data 2 value from follower node 3 via master-follower link to the master (master only). Shows the value sent as word 2 from follower node 3 via master-follower link to the master as integer by 62.08 Follower node 3 data 2 sel. Can also be used as source by other parameters.						
	0 … 65535	-		1 = 1	y	n	Signal
62.33	**Follower node 3 data 3 value**						
	Master-follower link, data 3 value from follower node 3 via master-follower link to the master (master only). Shows the value sent as word 3 from follower node 3 via master-follower link to the master as integer by 62.09 Follower node 3 data 3 sel. Can also be used as source by other parameters.						

Index	Name						
	Text						
	Range	**Default**	**Unit**	**Scale FbEq16**	**Volatile**	**Change running**	**Type**
	0 … 65535	-	-	1 = 1	y	n	Signal
62.34	**Follower node 4 data 1 value**						
	Master-follower link, data 1 value from follower node 4 via master-follower link to the master (master only). Shows the value sent as word 1 from follower node 4 via master-follower link to the master as integer by 62.10 Follower node 4 data 1 sel. Can also be used as source by other parameters.						
	0 … 65535	-	-	1 = 1	y	n	Signal
62.35	**Follower node 4 data 2 value**						
	Master-follower link, data 2 value from follower node 4 via master-follower link to the master (master only). Shows the value sent as word 2 from follower node 4 via master-follower link to the master as integer by 62.11 Follower node 4 data 2 sel. Can also be used as source by other parameters.						
	0 … 65535	-	-	1 = 1	y	n	Signal
62.36	**Follower node 4 data 3 value**						
	Master-follower link, data 3 value from follower node 4 via master-follower link to the master (master only). Shows the value sent as word 3 from follower node 4 via master-follower link to the master as integer by 62.12 Follower node 4 data 3 sel. Can also be used as source by other parameters.						
	0 … 65535	-	-	1 = 1	y	n	Signal
62.37	**M/F communication status 1**						
	reserved						
	0000h … FFFFh	-	-	1 = 1	y	n	Signal
62.38	**M/F communication status 2**						
	reserved						
	0000h … FFFFh	-	-	1 = 1	y	n	Signal
62.41	**M/F follower ready status 1**						
	reserved						
	0000h … FFFFh	-	-	1 = 1	y	n	Signal
62.42	**M/F follower ready status 2**						
	reserved						
	0000h … FFFFh	-	-	1 = 1	y	n	Signal
	Parameters 62.45 … 62.50 select targets for the data received from the DDCS controller in data sets 1 and 3. These data sets are used in communication with 60.50 DDCS controller drive type = ABB standard drive. Signals 62.95 … 62.100 display the data received from the DDCS controller in integer format and can also be used as sources by other parameters. **Example**: 62.45 Data set 1 data 1 selection selects a target for data set 1 data 1. Then 62.95 Data set 1 data 1 value displays the received data in integer format and can also be used as a source by other parameters.						
62.45	**Data set 1 data 1 selection**						
	DDCS controller link, data set 1 data 1 from the DDCS controller via DDCS controller link to the unit. Select data sent as data set 1 data 1 from the DDCS controller via DDCS controller link to the unit. The value is visible in 62.95 Data set 1 data 1 value. **Other**; source selection. 0: **None**; inactive. Disable DDCS controller link data out. 1: **CW 16bit**; control word (16-bit). Send to 06.10 DDCS control word. 2: **Ref1 16bit**; reference REF1 (16-bit). Send to 03.11 DDCS controller ref1. 3: **Ref2 16bit**; reference REF2 (16-bit). Send to 03.12 DDCS controller ref2.						
	0 … 3	None	-	1 = 1	n	y	Parameter

Index	Name						
	Text						
	Range	**Default**	**Unit**	**Scale FbEq16**	**Volatile**	**Change running**	**Type**
62.46	**Data set 1 data 2 selection**						
	DDCS controller link, data set 1 data 2 from the DDCS controller via DDCS controller link to the unit. Select data sent as data set 1 data 2 from the DDCS controller via DDCS controller link to the unit. The value is visible in 62.96 Data set 1 data 2 value. See 62.45 Data set 1 data 1 selection.						
	0 … 3	None	-	1 = 1	n	y	Parameter
62.47 … 62.50	**Data set 1 data 3 selection … Data set 3 data 3 selection**						
	See 62.45 Data set 1 data 1 selection.						
	0 … 3	None	-	1 = 1	n	y	Parameter
	Parameters 62.51 … 62.74 select targets for the data received from the DDCS controller in data sets 10, 12, 14, 16, 18, 20, 22 and 24. These data sets are used in communication with 60.50 DDCS controller drive type = ABB engineered drive. The update intervals of the data sets are as follows: – Data sets 10 and 11: 2 ms. – Data sets 12 and 13: 4 ms. – Data sets 14 … 17: 10 ms. – Data sets 18 … 25, 32 and 33: 100 ms. Signals 62.101 … 62.124 display the data received from the DDCS controller in integer format and can also be used as sources by other parameters. **Example**: 62.51 Data set 10 data 1 selection selects a target for data set 10 data 1. Then 62.101 Data set 10 data 1 value displays the received data in integer format and can also be used as a source by other parameters.						
62.51	**Data set 10 data 1 selection**						
	DDCS controller link, data set 10 data 1 from the DDCS controller via DDCS controller link to the unit. Select data sent as data set 10 data 1 from the DDCS controller via DDCS controller link to the unit. The value is visible in 62.101 Data set 10 data 1 value. **Other**; source selection. 0: **None**; inactive. Disable DDCS controller link data out. 1: **CW 16bit**; control word (16-bit). Send to 06.10 DDCS control word. 2: **Ref1 16bit**; reference REF1 (16-bit). Send to 03.11 DDCS controller ref1. 3: **Ref2 16bit**; reference REF2 (16-bit). Send to 03.12 DDCS controller ref2.						
	0 … 3	None	-	1 = 1	n	y	Parameter
62.52	**Data set 10 data 2 selection**						
	DDCS controller link, data set 10 data 2 from the DDCS controller via DDCS controller link to the unit. Select data sent as data set 10 data 2 from the DDCS controller via DDCS controller link to the unit. The value is visible in 62.102 Data set 10 data 2 value. See 62.51 Data set 10 data 1 selection.						
	0 … 3	None	-	1 = 1	n	y	Parameter
62.53 … 62.74	**Data set 10 data 3 selection … Data set 24 data 3 selection**						
	See 62.51 Data set 10 data 1 selection.						
	0 … 3	None	-	1 = 1	n	y	Parameter
62.95	**Data set 1 data 1 value**						
	DDCS controller link, data set 1 data 1 from the DDCS controller via DDCS controller link to the unit.						

Index	Name						
	Text						
	Range	Default	Unit	Scale FbEq16	Volatile	Change running	Type
	Shows the value sent as data set 1 data 1 from the DDCS controller via DDCS controller link to the unit as integer by 62.45 Data set 1 data 1 selection. Can also be used as source by other parameters.						
	0 … 65535	0	-	1 = 1	y	n	Signal
62.96	**Data set 1 data 2 value**						
	DDCS controller link, data set 1 data 2 from the DDCS controller via DDCS controller link to the unit. Shows the value sent as data set 1 data 2 from the DDCS controller via DDCS controller link to the unit as integer by 62.46 Data set 1 data 2 selection. Can also be used as source by other parameters.						
	0 … 65535	0	-	1 = 1	y	n	Signal
62.97 … 62.100	**Data set 1 data 3 value … Data set 3 data 3 value**						
	See 62.95 Data set 1 data 1 value.						
	0 … 65535	0	-	1 = 1	y	n	Signal
62.101	**Data set 10 data 1 value**						
	DDCS controller link, data set 10 data 1 from the DDCS controller via DDCS controller link to the unit. Shows the value sent as data set 10 data 1 from the DDCS controller via DDCS controller link to the unit as integer by 62.51 Data set 10 data 1 selection. Can also be used as source by other parameters.						
	0 … 65535	0	-	1 = 1	y	n	Signal
62.102	**Data set 10 data 2 value**						
	DDCS controller link, data set 10 data 2 from the DDCS controller via DDCS controller link to the unit. Shows the value sent as data set 10 data 2 from the DDCS controller via DDCS controller link to the unit as integer by 62.52 Data set 10 data 2 selection. Can also be used as source by other parameters.						
	0 … 65535	0	-	1 = 1	y	n	Signal
62.102 … 62.124	**Data set 10 data 3 value … Data set 24 data 3 value**						
	See 62.101 Data set 10 data 1 value.						
	0 … 65535	0	-	1 = 1	y	n	Signal

95 HW configuration

Various hardware-related settings.

Index	Name						
	Text						
	Range	Default	Unit	Scale FbEq16	Volatile	Change running	Type
95.14	**Set: Power unit**						
	Set the type of power unit. 95.14 Set: Power unit is only shown and available when there is a mismatch between 95.14 Set: Power unit read from SDCS-CON-H01 and 95.14 Set: Power unit read from the plugged-in memory unit. See also 07.02 Power unit set. Either adapt the SDCS-CON-H01 using 95.14 Set: Power unit and 95.25 Set: Type code or use a memory unit with an appropriate firmware. 0: **DCS converter**; the unit is a DCS880. 20: **DCT controller**; the unit is a DCT880. 40: **TSU supply unit**; the unit is a TSU880.						

Index	Name						
	Text						
	Range	**Default**	**Unit**	**Scale FbEq16**	**Volatile**	**Change running**	**Type**
	100: **Unsupported power unit type**; mismatch between 95.14 Set: Power unit read from SDCS-CON-H01 and 95.14 Set: Power unit read from the plugged-in memory unit. This event generates fault 5525 Type code and shows 95.14 Set: Power unit.						
	0 … 100	Unsupported power unit type	-	1 = 1	n	n	Parameter
95.15	**Control unit configuration**						
	Control/Electronic unit configuration. Contains the structure of the unit. Either electronic unit and power unit are in the same housing as in units size T1 … T6 or control unit and power units are separate like in units size T8. A wrong setting of 95.16 Control unit configuration generates warning A113 Power unit, communication and/or A7AB I/O extension configuration. 0: **Internal**; electronic unit and power unit are usually in the same housing. E.g., for units size T1 … T6. Fiber optic control inactive. 1: **1 external PU**; control unit and one power unit are separate. For units size T8. Channel1 of the SDCS-DSL-H1x is active. Fiber optic control active. 9: **Automatic**; automatic setting according to 95.25 Set: Type code. For units size T1 … T8.						
	0 … 9	Automatic	-	1 = 1	n	n	Parameter
95.16	**Set: Unit type code**						
	Set the type code of the unit. Contains the unit's type, power part type, current-, voltage- and temperature measurement. 95.16 Set: Unit type code is preset in the factory and is write protected. To enable use 99.07 Service mode = Set Type Code. The change of the type code is immediately taken over. 99.07 Service mode = Set Type Code must be set back to Normal Operation by the user. Results can be seen in: – 07.02 Power unit set. – 07.03 Unit rating ID set. – 07.15 Unit type set. – 07.16 Unit legs set. – 07.17 Unit output current scaling set. – 07.18 Unit output overcurrent level. – 07.19 Unit input voltage scaling set. – 07.20 Unit max power part temp set. 0: **W00-0000-00**; the user sets the type code, see 95.17 Set: Unit legs, 95.18 Set: Unit output current scaling, 95.19 Set: Unit input voltage scaling and 95.20 Set: Unit max power part temp for e.g., rebuild kits. 1: **W02-0020-04**; type code, see table. … 324: **W02-1750-08**; type code, see table:						

The thyristor power controller's basic type code: DCT880-aab-cccc-ddef+ plus code			
Product family:	DCT880		
Type:	aa	= W0	Standard unit
		= A0	Cabinets
Power part type:	b	= 2	Two-leg anti-parallel circuit
		= 3	Three-leg anti-parallel circuit
Module type:	cccc	=	Rated AC current (RMS) per leg
Rated AC voltage:	dd	= 04	110 V_{AC} … 415 V_{AC} (IEC)/400 V_{AC} (UL)
		= 05	110 V_{AC} … 500 V_{AC} (IEC)/525 V_{AC} (UL)
		= 07	315 V_{AC} … 690 V_{AC} (IEC)/600 V_{AC} (UL)
		= 08	360 V_{AC} … 800 V_{AC}

Index	Name							
	Text							
	Range	Default	Unit	Scale FbEq16	Volatile	Change running	Type	

		= 10	450 V_{AC} … 990 V_{AC}
Power connection:	e	= X	Standard T1 … T6
		= R	Mains connection and CTs on the right T8
Revision code:	f	= 0	T1 … T5: With SDCS-PIN-H11. T6: Standard (equipped with SDCS-CON-H01, SDCS-POW-H01, 2 x SDCS-PIN-H51, SDCS-PIN-H41 and SDCS-CMI-H02)
		= A	T1 … T5: With SDCS-PIN-H11A
		= B	T5: New cooling fan R2E250-RE04-10
		= S	T6: Special design (equipped with SDCS-CON-H01, SDCS-PIN-H11A, SDCS-CMI-H02, SDCS-REB-H11 and SDCS-PIN-46)
		= T	T6: Special design (equipped with SDCS-CON-H01, SDCS-PIN-H11A, SDCS-CMI-H02, SDCS-REB-H11 and SDCS-PIN-46) and new cooling fan R2E250-RE04-10

Notes:
- For units size T6 special design (DCT880-W0b-1300-0d**XS/XT** and DCT880-W0b-1750-0d**XS/XT**) set 95.16 Set: Unit type code = W00-0000-00.
- For units size T6 standard (DCT880-W0b-1300-0d**X0** and DCT880-W0b-1750-0d**X0**) set 95.16 Set: Unit type code to the matching type code according to the name plate of the unit.

	0 ... 231	W00-0000-00	-	1 = 1	n	n	Parameter
95.17	**Set: Unit legs**						

Hardware setting (open).
Number of legs in the unit. This value overrides the type code and is immediately visible in 07.16 Unit legs set.
0: **Automatic**; set automatically according to 95.16 Set: Unit type code.
1: **1 Leg**; single-leg circuit.
2: **2 Legs**; two-leg circuit.
3: **3 Legs**; three-leg circuit.
Notes:
- For units size T6 special design (DCT880-W0b-1300-0d**XS/XT** and DCT880-W0b-1750-0d**XS/XT**) set 95.17 Set: Unit legs to the number of used legs.
- For units size T6 standard (DCT880-W0b-1300-0d**X0** and DCT880-W0b-1750-0d**X0**) leave 95.17 Set: Unit legs = Automatic (default).

	0 … 3	Automatic	-	1 = 1	n	n	Parameter
95.18	**Set: Unit output current scaling**						

Set the nominal output current of the unit.
Adjustment of the output current measuring channels (XEXCT on SDCS-PIN-H11). 95.18 Set: Unit output current scaling is write protected. To enable use 99.07 Service Mode = Set Type Code. 99.07 Service mode = Set Type Code must be set back to Normal Operation by the user.

0 A	Take value from 95.16 Unit type code.
1 … 30000 A	Take value from 95.18 Set: Unit output current scaling.

This value overrides the type code and is immediately visible in 07.17 Unit output current scaling set.
Notes:
- For units size T6 special design (DCT880-W0b-1300-0d**XS/XT** and DCT880-W0b-1750-0d**XS/XT**) set 95.18 Set: Unit output current scaling = 2500 A.
- For units size T6 standard (DCT880-W0b-1300-0d**X0** and DCT880-W0b-1750-0d**X0**) leave 95.18 Set: Unit output current scaling = 0 A (default).

Index	Name						
	Text						
	Range	Default	Unit	Scale FbEq16	Volatile	Change running	Type
	0 … 30000	0	A	1 = 1 A	n	n	Parameter
95.19	**Set: Unit input voltage scaling**						
	Set the nominal input voltage of the unit. Adjustment of input voltage measuring channels (XEXVM on SDCS-PIN-H11). 95.19 Set: Unit input voltage scaling is write protected. To enable use 99.07 Service Mode = Set Type Code. 99.07 Service mode = Set Type Code must be set back to Normal Operation by the user. 0.0 V — Take value from 95.16 Unit type code. 0.1 … 3250.0 V — Take value from 95.19 Set: Unit input voltage scaling. This value overrides the type code and is immediately visible in 07.19 Unit input voltage scaling set. **Notes:** – For units size T6 special design (DCT880-W0b-1300-0d**XS/XT** and DCT880-W0b-1750-0d**XS/XT**) leave 95.19 Set: Unit input voltage scaling = 0.0 V (default). – For units size T6 standard (DCT880-W0b-1300-0d**X0** and DCT880-W0b-1750-0d**X0**) leave 95.19 Set: Unit input voltage scaling= 0.0 V (default).						
	0.0 … 3250.0	0.0	V	10 = 1 V	n	n	Parameter
95.20	**Set: Unit max power part temp**						
	Set the maximum bridge temperature of the unit. Adjustment of the unit bridge temperature tripping level in degree centigrade. 0°C — Take value from 95.16 Unit type code. 1°C … 149°C — Take value from 95.20 Set: Unit max power part temp. 150°C — The temperature supervision is inactive, e.g., for rebuild kits. This value overrides the type code and is immediately visible in 07.20 Unit max power part temp set. **Notes:** – For units size T6 special design (DCT880-W0b-1300-0d**XS/XT** and DCT880-W0b-1750-0d**XS/XT**) set 95.20 Set: Unit max power part temp = 55°C. Do not forget to connect and supervise the pressure switch, see 19.38 Controller fan acknowledge source. – For units size T6 standard (DCT880-W0b-1300-0d**X0** and DCT880-W0b-1750-0d**X0**) leave 95.20 Set: Unit max power part temp = 0°C (default). Do not forget to connect and supervise the pressure switch, see 19.38 Controller fan acknowledge source.						
	0 … 150	0	°C	1 = 1°C	n	n	Parameter
95.26	**Stack configuration**						
	Stack configuration. Stack configuration of the DCT880 power part. Switch-over delay is a mains voltage period. Thus, not dependent on the zero current signal. **Other**; source selection. 0: **CD1**; 0, normal power part configuration with one SDCS-PIN-H41 and one set of 6 thyristors. 1: **CD2**; 1, special power part configuration with two SDCS-PIN-H41 and two sets of 6 thyristors. Typically used for the excitation of medium voltage motors.						
	0 … 1	0	-	1 = 1	y	n	Parameter
95.30	**PLL input deviation**						
	PLL input deviation. Actual measured mains voltage cycle (period) time. Is used as input of the PLL controller. For 50 Hz mains the value should be:						

Index	Name						
	Text						
	Range	Default	Unit	Scale FbEq16	Volatile	Change running	Type
	$\frac{1}{60Hz} = 16.67\,ms \equiv 0°$. For 60 Hz mains the value should be: $\frac{1}{50Hz} = 20\ ms \equiv 0°$.						
	-180.00 … 180.00	-	°	100 = 1°	y	n	Signal
95.31	**PLL output, internal mains frequency**						
	PLL output. Calculated and internally controlled mains frequency. Output of PLL controller.						
	0.00 … 100.00	-	Hz	100 = 1 Hz	y	n	Signal
95.34	**PLL offset synchronization transformer**						
	PLL offset due to a synchronization transformer. Compensation of a synchronization transformer's phase shift compared to the mains transformer. The maximum phase shift compensation is ± 60.00°.						
	-60.00 … 60.00	0.00	°	100 = 1°C	n	y	Parameter
95.35	**PLL deviation level**						
	PLL deviation level to block the current controller. Maximum allowed deviation of the PLL controller. Exceeding the level generates alarm A131 PLL deviation. Thus, the unit is blocked. For 50 Hz mains is valid: $\frac{1}{50Hz} = 20\ ms \equiv 0°$. For 60 Hz mains is valid: $\frac{1}{60Hz} = 16.67\,ms \equiv 0°$.						
	5.00 … 20.00	10.00	°	100 = 1°C	n	y	Parameter
95.36	**PLL proportional gain**						
	PLL p-part. Gain of firing unit's phase lock loop. See 95.46 PLL filter time.						
	0.01 … 2.00	0.50	-	100 = 1	n	y	Parameter
95.37	**PLL filter time**						
	PLL filter time constant. Filter of firing unit's phase lock loop. **Commissioning hint:**						

95.45 PLL proportional gain	95.46 PLL filter time
1.0	≤ 5 msec
0.5	≤ 10 msec
0.2	≤ 20 msec
0.1	≤ 50 msec
0.05	≤ 100 msec
0.02	≤ 200 msec
0.01	≤ 500 msec

Index	Name						
	Text						
	Range	Default	Unit	Scale FbEq16	Volatile	Change running	Type
	0.0 … 500.0	0.0	ms	10 = 1 ms	n	y	Parameter
95.38	**PLL Uk compensation**						
	PLL mains transformer u_k compensation. reserved						
	0.0 … 15.0	0.0	%	10 = 1 %	n	y	Parameter
95.50	**PLL sync mode**						
	PLL synchronization mode. Synchronization mode for the PLL. 0: reserved 1: **1**; classic PLL synchronization mode. Used for all operation modes of the DCT880. 2: **2**; fast PLL synchronization mode. Fast recovery after a power dip (ride trough). Not to be used together with multitap.						
	0 … 2	1	-	1 = 1	n	y	Parameter

96 System

Language selection, access levels, macro selection, parameter save and restore, unit reboot, user parameter sets, unit selection.

Index	Name						
	Text						
	Range	Default	Unit	Scale FbEq16	Volatile	Change running	Type
96.01	**Language**						
	Language selection. Selects the language of the parameter interface and other displayed information when viewed on the control panel. **Notes:** – Not all languages listed below are necessarily supported. – 96.01 Language does not affect the languages visible in the PC tool. 0: **Not selected**; none. 1029: **Czech**; Czech. 1030: **Dansk**; Danish. 1031: **Deutsch**; German. Supported. 1033: **English**; English. Supported. 1035: **Suomi**; Finnish. 1036: **Français**; French. Supported. 1040: **Italiano**; Italian. 1043: **Nederlands**; Dutch. 1045: **Polski**; Polish. 1049: **Russki**; Russian. 1053: **Svenska**; Swedish. Supported. 1055: **Türkçe**; Turkish. 2052: **Chinese (Simplified, PRC)**; Simplified Chinese. 2070: **Portugues**; Portuguese. 3082: **Español**; Spanish.						
	0 … 3082	Not selected	-	1 = 1	n	y	Parameter
96.02	**Pass code**						
	Pass code. Enter a pass code to activate the parameter lock or to configure the user lock. See 96.102 User lock functionality.						

Index	Name						
	Text						
	Range	**Default**	**Unit**	**Scale FbEq16**	**Volatile**	**Change running**	**Type**
	Parameter lock: Entering “358” toggles the parameter lock, which prevents the changing of all other parameters through control panel or PC tool. User lock (opening generates warning A6B0 User lock open): Entering the user pass code, by default “10,000,000”, unhides parameters 96.100 … 96.102. Now it is possible to define a new user pass code and to select the actions to be prevented. Entering an invalid pass code will close an open user lock, by hiding parameters 96.100 … 96.102. After entering the code, check that the parameters are in fact hidden. **Example**: For better cyber security, set a user pass code preventing change of parameter values or loading of firmware and other files. To activate the user lock for the first time, enter the default user pass code “10,000,000” into 96.02 Pass code. This unhide parameters 96.100 … 96.102. Then enter a new user pass code into 96.100 Change user pass code and confirm the code in 96.101 Confirm user pass code. In 96.102 User lock functionality define the actions to be prevented. To close the user lock, enter an invalid user pass code into 96.02 Pass code then activate 96.08 Control board boot or cycle the power. With the lock closed, parameters 96.100 … 96.102 are hidden. To reopen the lock, enter Your user pass code into 96.02 Pass code. This will again unhide parameters 96.100 … 96.102. **WARNING** Do not forget Your user pass code. The factory has no means to reset the control board! A new control board must be purchased.						
	0 … 99999999	0	-	1 = 1	y	y	Parameter
96.03	**Access levels active**						
	Active access levels. Shows, which access levels, have been activated by 96.02 Pass code and 96.102 User lock functionality. Bit assignment:						
	0000h … FFFFh	-	-	1 = 1	y	n	Signal

Bit	Name	Value	Remarks
0	End user	1	End user active.
1	Service	1	Service active.
2	Advanced programmer	1	Advanced programmer active.
3	reserved		
4	reserved		
5	reserved		
6	reserved		
7	reserved		
8	reserved		
9	reserved		
10	reserved		
11	OEM access level 1	1	OEM access level 1 active.
12	OEM access level 2	1	OEM access level 2 active.
13	OEM access level 3	1	OEM access level 3 active.
14	Parameter lock	1	Parameter lock is active.
15	reserved		

Index	Name						
	Text						
	Range	**Default**	**Unit**	**Scale FbEq16**	**Volatile**	**Change running**	**Type**
96.04	**Macro select**						
	Selects a macro (pre-defined parameter set). Selects a macro. The value reverts automatically to Done when the macro selection is finished. The selected macro is shown in 96.05 Macro active. **Notes:** – Only macro depending parameters will be set. The rest of the parameters will not be changed. – It is possible to change all preset parameters of a loaded macro. – Selecting the actual macro again restores all macro depending parameters to the macro's default values. 0: **Done**; normal operation or application macro selection done. 1: **Factory**; factory (default) parameter set.						
	0 … 1	Done	-	1 = 1	n	n	Parameter
96.05	**Macro active**						
	Shows the active macro. Shows which macro is currently selected. To change the macro, use 96.04 Macro select. 0: **None**; no macro selected. 1: **Factory**; factory (default) parameter set. See 96.04 Macro select.						
	0 … 1	-	-	1 = 1	y	n	Signal
96.07	**Parameter save manually**						
	Save/Load parameters. Saves valid parameter values to the flash memory. 96.07 Parameter save manually should be used to save e.g., values sent from a fieldbus. The value reverts automatically to Done when the parameter save is done. **Notes**: – Use the parameter save function only when needed. – A new parameter value is saved automatically when changed from the control panel or PC tool but not when altered through a fieldbus adapter connection. 0: **Done**; normal operation or save completed. 1: **Save**; command to save parameters or saving parameters in progress.						
	0 … 1	Done	-	1 = 1	y	y	Parameter
96.08	**Control board boot**						
	Reboot the control board. Reboots the control unit. No cycling the power of the complete unit required. The value reverts automatically to Done when the reboot is finished. 0: **Done**; 0, normal operation or reboot done. 1: **Reboot**; 1, reboot the control board.						
	0 … 1	0	-	1 = 1	y	n	Parameter
96.10	**User set status**						
	User parameter set status display. Shows the status of the user parameter sets. 0: **None**; No user parameter sets have been saved. 1: **Loading**; currently loading a user parameter set. 2: **Saving**; currently saving a user parameter set. 3: **Faulted**; invalid or empty user set. 4: **User set 1**; user set 1 is loaded. 5: **User set 2**; user set 2 is loaded. 6: **User set 3**; user set 3 is loaded. 7: **User set 4**; user set 4 is loaded.						
	0 … 7	-	-	1 = 1	y	n	Signal

Index	Name						
	Text						
	Range	**Default**	**Unit**	**Scale FbEq16**	**Volatile**	**Change running**	**Type**
96.11	**User set save/load**						
	User parameter set handling. Enables the saving and restoring of up to four user parameter sets. The value reverts automatically to Done when the loading or saving is finished. **Notes:** – Hardware configuration settings such as I/O extension module, and fieldbus configuration parameters (groups 14 … 16, 47 and 51 … 56, 58) are not included in the user parameter sets. – Forced input/output values such as 10.03 DI force selection and 10.04 DI force data are not included in the user parameter sets. – The user parameter set that was in use before powering down the unit is in use after the next power-up. Except User set I/O mode is used. See parameters 96.12 and 96.13. – Parameter changes made after loading a user parameter set are not automatically stored in it. They must be saved again using 96.11 User set save/load. – The loaded user parameter set is shown in 96.10 User set status. – The PC tool ‘Backup/restore’ function saves the active parameter set and all 4 user sets. – The PC tool ‘Save parameters to file’ function only saves the active parameter set. Thus, user set 1 … user set 4 must be saved separately. 0: **Done**; normal operation, loading or saving is done. 1: **User set I/O mode**; load user parameter set using 96.12 User set I/O mode in1 and 96.13 User set I/O mode in2. 2: **Load set 1**; load user set 1. 3: **Load set 2**; load user set 2. 4: **Load set 3**; load user set 3. 5: **Load set 4**; load user set 4. 18: **Save to set 1**; save parameters to user set 1. 19: **Save to set 2**; save parameters to user set 2. 20: **Save to set 3**; save parameters to user set 3. 21: **Save to set 4**; save parameters to user set 4.						
	0 … 21	Done	-	1 = 1	n	y	Parameter
96.12	**User set I/O mode in1**						
	Load user sets using digital I/O. With 96.11 User set save/load = User set I/O mode it is possible to select user parameter sets via 96.12 User set I/O mode in1 and 96.13 User set I/O mode in2 according to the following table.						

96.12 User set I/O mode in1	96.13 User set I/O mode in2	Selected user parameter set
0	0	User set 1
1	0	User set 2
0	1	User set 3
1	1	User set 4

0 = Always off.
1 = Always on.
Other [bit]; source selection.
0: **Not selected**; 0, normal operation.
1: **Selected**; 1.
3: **DI1**; 10.02.b00 DI delayed status.
4: **DI2**; 10.02.b01 DI delayed status.
5: **DI3**; 10.02.b02 DI delayed status.
6: **DI4**; 10.02.b03 DI delayed status.
7: **DI5**; 10.02.b04 DI delayed status.
8: **DI6**; 10.02.b05 DI delayed status.

Index	Name						
	Text						
	Range	**Default**	**Unit**	**Scale FbEq16**	**Volatile**	**Change running**	**Type**
	11: **DIO1**; 11.02.b00 DIO delayed status. 12: **DIO2**; 11.02.b01 DIO delayed status. 19: **DIL**; 10.02.b15 DI delayed status.						
	0 … 19	Not selected	-	1 = 1	n	y	Parameter
96.13	**User set I/O mode in2**						
	Load user sets using digital I/O. See 96.12 User set I/O mode in1.						
	0 … 19	Not selected	-	1 = 1	n	y	Parameter
96.20	**Time sync primary source**						
	1st priority time synchronization source. Defines the 1st priority external source for the unit time and date synchronization. 0: **Internal**; no external source selected. 1: **DDCS Controller**; external DDCS-PLC. 2: **Fieldbus A or B**; fieldbus adapter A or fieldbus adapter B. 3: **Fieldbus A**; fieldbus adapter A. 4: **Fieldbus B**; fieldbus adapter B. 5: **D2D or M/F**; master unit of a master-follower link or device-to-device link. 6: **Embedded FB**; embedded fieldbus. 8: **Panel link**; control panel or the PC tool connected to the control panel. 9: **Ethernet tool link**; PC tool through a FENA module. 10: reserved;						
	0 … 9	DDCS Controller	-	1 = 1	n	y	Parameter
96.23	**M/F and D2D clock synchronization**						
	Activate the clock synchronization. Activates the clock synchronization for master-follower link and device-to-device communication. 0: **Inactive**; clock synchronization not active. 1: **Active**; clock synchronization active.						
	0 … 1	Inactive	-	1 = 1	n	y	Parameter
96.24	**Full days since 1st Jan 1980**						
	Days since beginning of 1980. Number of full days passed since beginning of the year 1980. Together with 96.25 Time in minutes within 24 h and 96.26 Time in ms within one minute makes it possible to set the date and time in the unit via the parameter interface from a fieldbus or application program. This may be necessary if the fieldbus protocol does not support time synchronization.						
	1 … 59999	12055	days	1 = 1 days	n	y	Parameter
96.25	**Time in minutes within 24 h**						
	Minutes since midnight. Number of full minutes passed since midnight. For example, the value 860 corresponds to 14:20. See 96.24 Full days since 1st Jan 1980.						
	0 … 1439	0	min	1 = 1 min	n	y	Parameter
96.26	**Time in ms within one minute**						
	Number of milliseconds since the last minute. Number of milliseconds passed since the last minute. See 96.24 Full days since 1st Jan 1980.						
	0 … 59999	0	ms	1 = 1 ms	n	y	Parameter
96.29	**Time source status**						
	Time source status word. Displays the time source status word. See 96.20 Time sync primary source.						

Index	Name						
	Text						
	Range	Default	Unit	Scale FbEq16	Volatile	Change running	Type
	Bit assignment:						

Bit	Name	Value	Remarks
0	Time tick received	1	1st priority tick received: Tick has been received from 1st priority source.
1	Aux time tick received	1	2nd priority tick received: Tick has been received from 2nd priority.
2	Tick interval is too long	1	Yes: Tick interval too long, accuracy compromised.
3	DDCS controller	1	Tick received: Tick has been received from an external DDCS-PLC.
4	M/F	1	Tick received: Tick has been received through the master-follower link.
5	reserved		
6	D2D	1	Tick received: Tick has been received through the device-to-device link.
7	FBA A	1	Tick received: Tick has been received through fieldbus adapter A.
8	FBA B	1	Tick received: Tick has been received through fieldbus adapter B.
9	EFB	1	Tick received: Tick has been received through the embedded fieldbus.
10	reserved		
11	Panel link	1	Tick received: Tick has been received from the control panel, or the PC tool connected to the control panel.
12	Ethernet tool link	1	Tick received: Tick has been received from the PC tool through a FENA module.
13	Parameter setting	1	Tick received: Tick has been set by parameters 96.37 … 96.39.
14	RTC	1	RTC time in use: Time and date have been read from the real-time clock.
15	Unit On-Time	1	Unit on-time in use: Time and date are displaying unit on-time.

0000h … FFFFh	-	-	1 = 1	y	n	Signal

96.31	**Unit ID number**						
	reserved						
	0 ... 32767	0	-	1 = 1	n	y	Parameter
96.51	**Clear fault and event logger**						
	Clears the fault and event logger in the Drive Composer by setting to a value greater than 0. 96.51 Clear fault and event logger is automatically reset to 0 after the cleaning has been finished.						
	0 … 65535	0	-	1 = 1	y	y	Parameter
96.61	**User data logger status word**						
	User data logger status word. Provides status information about the user data logger. Bit assignment:						

Bit	Name	Value	Remarks

Index	Name						
	Text						
	Range	Default	Unit	Scale FbEq16	Volatile	Change running	Type
	0 Running: 1 Running.; 0 The post-trigger time is passed. 1 Triggered: 1 Triggered.; 0 Restarted. 2 Data available: 1 Contains data that can be read.; 0 Contains no data. 3 Configured: 1 Configured.; Not configured. 4 … 15 reserved						
	0000h … FFFFh	-	-	1 = 1	y	n	Signal
96.63	**User data logger trigger**						
	Trigger source for the user data logger. Triggers or selects a source that triggers the user data logger. 0: **No trigger command**; 0, normal operation. 1: **Trigger**; 1.						
	0 … 1	No trigger command	-	1 = 1	n	y	Parameter
96.64	**User data logger start**						
	Start source for the user data logger. Starts or selects a source that starts the user data logger. 0: **No start command**; 0, normal operation. 1: **Start**; 1.						
	0 … 1	No start command	-	1 = 1	n	y	Parameter
96.65	**Factory data logger time level**						
	Factory data logger sample time. Selects the sampling interval for the factory data logger. The values that are recorded in the factory data logger are: – 01.33 Leg 1 Current RMS relative actual. – 01.34 Leg 2 Current RMS relative actual. – 01.35 Leg 3 Current RMS relative actual. – 01.40 Leg 1 Alpha actual. – 01.42 Leg 2 Alpha actual. – 01.44 Leg 3 Alpha actual. – 04.01 Tripping fault. – 04.02 Active fault 2. – 06.08 Used Main Control Word. – 06.13 Global Status Word. The user cannot change this selection of parameters. 500: **500 µs**; 500 microseconds. 2000: **2 ms**; 2 milliseconds. 10000: **10 ms**; 10 milliseconds.						
	500 … 10000	500 µs	-	1 = 1	n	y	Parameter
96.70	**Disable adaptive program**						
	Enable/Disable an adaptive program. Enables/Disables an adaptive program if present. 0: **Enable adaptive program**; 0, normal operation. 1: **Disable adaptive program**; 1.						
	0 … 1	Enable adaptive program	-	1 = 1	n	n	Parameter

Index	Name						
	Text						
	Range	**Default**	**Unit**	**Scale FbEq16**	**Volatile**	**Change running**	**Type**
96.71	**Disable application program**						
	Enable/Disable an application program. Enables/Disables an application program if present. 0: **Enable application program**; 0, normal operation. 1: **Disable application program**; 1.						
	0 … 1	Enable application program	-	1 = 1	n	n	Parameter
96.100	**Change user pass code**						
	New user pass code. Only visible when the user lock is open. To change the current user pass code, enter a new one here and confirm using 96.101 Confirm user pass code. Warning 1236 User lock is open is active until the new pass code is confirmed. To cancel changing the pass code, close the user lock without confirming. To close the user lock, enter an invalid user pass code into 96.02 Pass code then activate 96.08 Control board boot or cycle the power. See 96.02 Pass code.						
	10000000 … 99999999	10000000	-	1 = 1	y	y	Parameter
96.101	**Confirm user pass code**						
	Confirms the new user pass code. Only visible when the user lock is open. Confirms the new user pass code entered in 96.100 Change user pass code. See 96.02 Pass code.						
	10000000 … 99999999	10000000	-	1 = 1	y	y	Parameter
96.102	**User lock functionality**						
	Selects the actions to be prevented by the user lock. Only visible when the user lock is open. Selects the actions or functionalities to be prevented by the user lock. **Note**: Changes made, take effect after the user lock is closed. See 96.02 Pass code. Bit assignment:						

Bit	Name	Value	Remarks
0	Disable ABB access levels	1	Disable ABB access levels like service, advanced programmer, etc. See 96.03 Access levels active.
1	Freeze parameter lock state	1	Prevent changing the parameter lock state. See 96.02 Pass code = 358 has no effect.
2	Disable file download	1	Prevent loading of files to the unit. This applies to: – Firmware upgrades. – Safety functions module FSO-21 configuration. – Parameter restore. See 96.15 Parameter restore. – Loading of adaptive programs. – Loading and debugging application programs. – Changing the home view of the control panel. – Editing unit texts. – Editing the favorite parameters list on the control panel. – Configuration settings made via the control panel such as time/date formats and enabling/disabling the clock display.
3	Disable FB write to hidden	1	Prevent access of parameters on disabled access levels via fieldbus.
4	reserved		
5	reserved		

Index	Name							
	Text							
	Range	Default	Unit	Scale FbEq16	Volatile	Change running	Type	
	6	Protect AP	1	Prevent creating a backup and restoring from a backup.				
	7	Disable panel Bluetooth	1	Disable Bluetooth of a Bluetooth capable control panel. If the drive is part of a panel bus, Bluetooth is disabled of all connected panels.				
	8 … 10	reserved						
	11	Disable OEM access level 1	1	Disable OEM access level 1.				
	12	Disable OEM access level 2	1	Disable OEM access level 2.				
	13	Disable OEM access level 3	1	Disable OEM access level 3.				
	14 … 15	reserved						
	0000h … FFFFh	-	-	1 = 1	n	y	Parameter	

99 Basic Settings

Unit configuration settings.

Index	Name						
	Text						
	Range	Default	Unit	Scale FbEq16	Volatile	Change running	Type

The following tables give an overview, which combinations between 99.04 Supply Configuration, 99.05 Load Configuration and 99.10 Leg 1 Control Mode are suitable.

99.04 Supply Configuration	99.05 Load Configuration	Number of active control loops	
		One	Three
0: 3ph UVW 3-phase common load	0: 3ph star (3S) 1: 3ph star + N (4S) 2: 3ph delta (3D) 3: 3ph open delta UV (6D) 4: 3ph open delta UW (6D) 5: 3ph transformer (3D/3S) 6: 3ph transformer UV (6D) 7: 3ph transformer UW (6D) 9: 3 x 1ph loads 10: 3 x 1ph transformer loads	leg 2 and leg 3 follow leg 1	n/a
0: 3ph UVW 3-phase individual loads	1: 3ph star + N (4S) 3: 3ph open delta UV (6D) 4: 3ph open delta UW (6D) 6: 3ph transformer UV (6D) 7: 3ph transformer UW (6D) 9: 3 x 1ph loads 10: 3 x 1ph transformer loads	n/a	leg 1, leg 2, leg 3
1: 3ph UW eco 3-phase common load	0: 3ph star (3S) 2: 3ph delta (3D)	leg 2 and leg 3 follow leg 1	n/a
2: 3 x 1ph + N 3 x single-phase	1: 3ph star + N (4S) 9: 3 x 1ph loads 10: 3 x 1ph transformer loads	leg 2 and leg 3 follow leg 1	leg 1, leg 2, leg 3
3: 1ph + N single-phase	9: 3 x 1ph loads 10: 3 x 1ph transformer loads	leg 1 or leg 2 or leg 3	n/a

99.05 Load Configuration	99.10 Leg 1 Control Mode

Index	Name						
	Text						
	Range	Default	Unit	Scale FbEq16	Volatile	Change running	Type

	Phase angle controls (5 … 12)	Full wave controls (1 … 3)	Full wave controls (2, 3), with 99.12 Leg 1 Start Mode = First angle	Full wave controls (2, 3), with 99.14 Leg 1 Burst Soft Start Ramp	Half wave control (4)
Single-phase direct: 9: 3 x 1ph loads	X	X	n/a	X	X
3 x single-phase direct: 9: 3 x 1ph loads	X	X	n/a	X	X
3-phase direct (individual loads): 1: 3ph star + N (4S) 3: 3ph open delta UV (6D) 4: 3ph open delta UW (6D)	X	X	n/a	X	X
3-phase direct (common load): 0: 3ph star (3S) 2: 3ph delta (3D)	X	X	n/a	X	n/a
Single-phase via transformer: 10: 3 x 1ph transformer loads	X	n/a	X	X	n/a
3 x single-phase via transformer: 10: 3 x 1ph transformer loads	X	n/a	X	X	n/a
3-phase via transformer (individual loads): 6: 3ph transformer UV (6D) 7: 3ph transformer UW (6D)	X	n/a	X	X	n/a
3-phase via transformer (common load): 5: 3ph transformer (3D/3S)	X	n/a	X	X	n/a

99.01	**Supply Voltage**						
	Nominal mains voltage. Nominal mains voltage of the supply. The default and maximum values are preset automatically according to 95.16 Set: Unit type code and 95.19 Set: Unit input voltage scaling. The absolute maximum is 1200.0 V_{AC}.						
	0.0 … 95.16/19	0.0	V	10 = 1 V	n	y	Parameter
99.02	**Load Current**						
	Nominal load current per leg (I_L). This value equals 100 % current for all relative current signals/parameters.						
	0.0 … 30000.0	0.0	A	1 = 1 A	n	y	Parameter
99.03	**Load Voltage**						
	Nominal voltage across the load. This value equals 100 % voltage for all relative voltage signals/parameters. The maximum value is preset automatically according to 95.16 Set: Unit type code and 95.19 Set: input voltage scaling.						

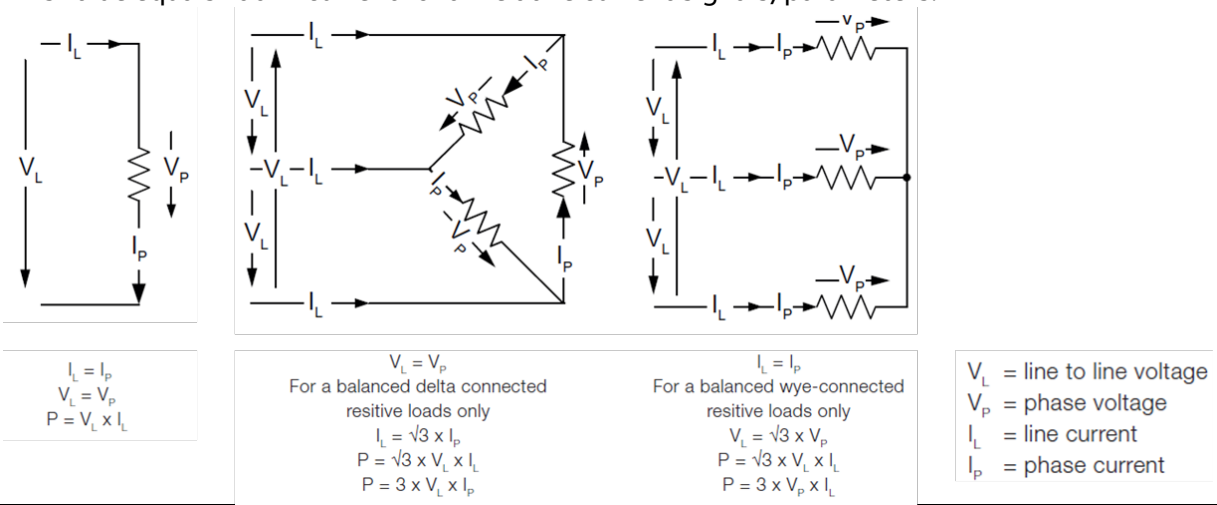

Index	Name						
	Text						
	Range	**Default**	**Unit**	**Scale FbEq16**	**Volatile**	**Change running**	**Type**
	Attention: The value of the load voltage depends on the load configuration, see 99.05 Load Configuration.						
	0.0 … 3250.0	0.0	V	10 = 1 V	n	y	Parameter
99.04	**Supply Configuration**						

Describes the configuration at the input (U1, V1, W1) of the unit.

0: 3ph UVW;

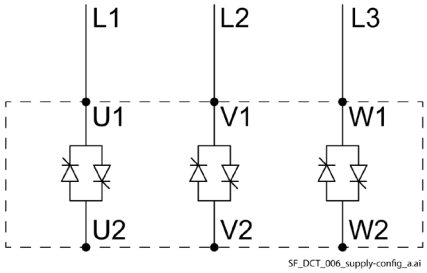

For units with 3 legs (W03).
Set 99.01 Supply Voltage to the connected phase-to-phase voltage (e.g., L1 … L2).

1: 3ph UW eco;

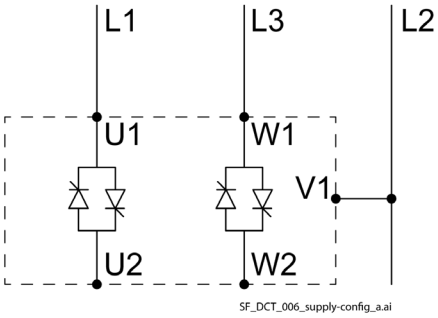

For units with 2 legs (W02).
Set 99.01 Supply Voltage to the connected phase-to-phase voltage (e.g., L1 … L2).
Set 19.30 Common Control Selector = Follow Leg 1.
Set 99.10 Leg 1 Control Mode = Full wave logic ON/OFF, Full wave fix cycle or Full wave variable cycle.
Set 99.12 Leg 1 Start Mode = Normal.
Set 99.25 Leg 2 Control Mode = 99.40 Leg 3 Control Mode = Follow Leg 1.

2: 3 x 1ph + N;

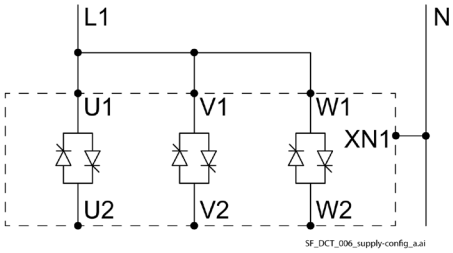

For units with 3 legs (W03) or 2 legs (W02).
U1, V1 and W1 connected to a single-phase mains.
Set 99.01 Supply Voltage to the connected phase voltage (e.g., L1 … N, L1 … L2, …).

Index	Name						
	Text						
	Range	Default	Unit	Scale FbEq16	Volatile	Change running	Type

3: 1ph + N;

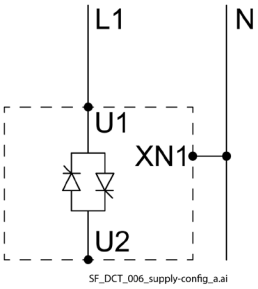

For units with 3 legs (W03) or 2 legs (W02). Only U1 is connected to a single-phase mains. Set 99.01 Supply Voltage to the connected phase voltage (e.g., L1 … N, L1 … L2, …).

4: Multitap 1ph;

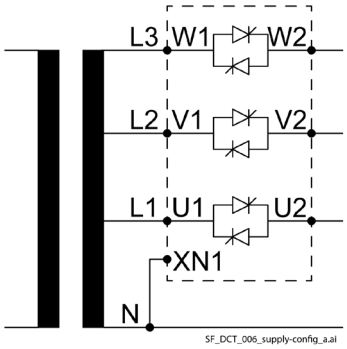

See DCT880 Multitap Control Manual (3ADW000440).

5: Multitap 3ph; See DCT880 Multitap Control Manual (3ADW000440).

6: 2ph Scott;

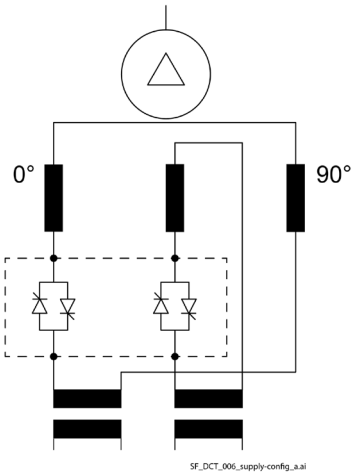

Converts a 3-phase system to a 2-phase system with 90° phase shift. Set 99.01 Supply Voltage to the connected phase-to-phase voltage (e.g., L1 … L2).

0 … 6	3ph UVW	-	1 = 1	n	y	Parameter

99.05 Load Configuration

Describes the configuration at the output (U2, V2, W2) of the unit.

0: 3ph star (3S);

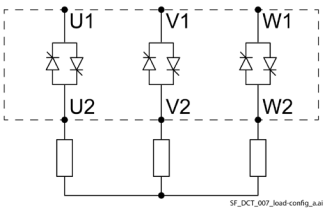

The load is connected in a star configuration. Set 99.03 Load Voltage to the connected phase-to-phase voltage (e.g., U2 … V2).

Index	Name						
	Text						
	Range	Default	Unit	Scale FbEq16	Volatile	Change running	Type
	1: 3ph star + N (4S); 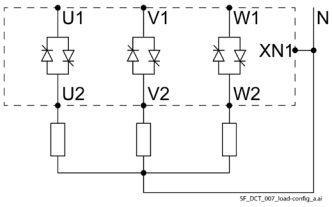 The load is connected in star configuration with neutral connected to the star point. Also possible for one or two loads or individual loads. Set 99.03 Load Voltage to the connected phase voltage (e.g., U2 … N).						
	2: 3ph delta (3D); 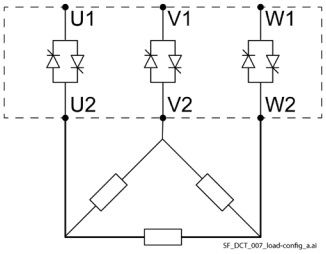 The load is connected in a delta configuration. Set 99.03 Load Voltage to the connected phase-to-phase voltage (e.g., U2 … V2).						
	3: 3ph open delta UV (6D); 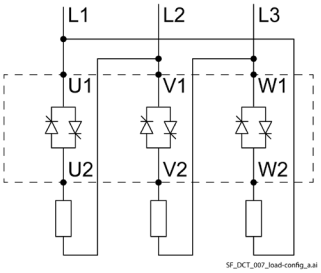 The load is connected in an open delta configuration (clockwise phase connection U V W). Also possible for one or two loads or individual loads. Set 99.03 Load Voltage to the connected phase-to-phase voltage (e.g., U2 … V2).						
	4: 3ph open delta UW (6D); 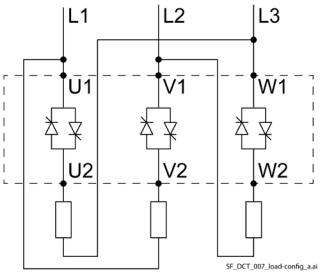 The load is connected in an open delta configuration (anticlockwise phase connection U W V). Also possible for one or two loads or individual loads. Set 99.03 Load Voltage to the connected phase-to-phase voltage (e.g., U2 … V2).						
	5: 3ph transformer (3D/3S); 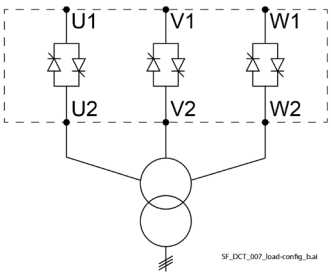 The load is connected via a 3-phase delta or star transformer. Set 99.03 Load Voltage to the connected phase-to-phase voltage (e.g., U2 … V2).						

Index	Name						
	Text						
	Range	Default	Unit	Scale FbEq16	Volatile	Change running	Type
	6: 3ph transformer UV (6D); 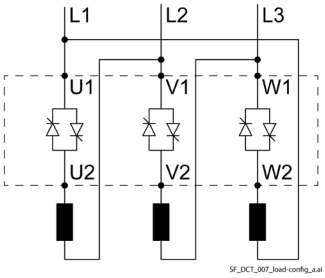 The load is connected via 3 single-phase transformers in open delta configuration (clockwise phase connection U V W). Also possible for one or two loads or individual loads. Set 99.03 Load Voltage to the connected phase-to-phase voltage (e.g., U2 … V2).						
	7: 3ph transformer UW (6D); 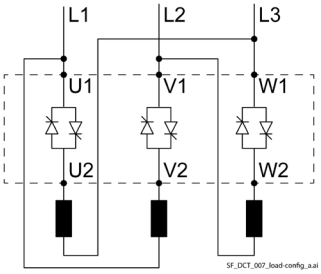 The load is connected via 3 single-phase transformers in open delta configuration (anticlockwise phase connection U W V). Also possible for one or two loads or individual loads. Set 99.03 Load Voltage to the connected phase-to-phase voltage (e.g., U2 … V2).						
	8: Scott transformer; 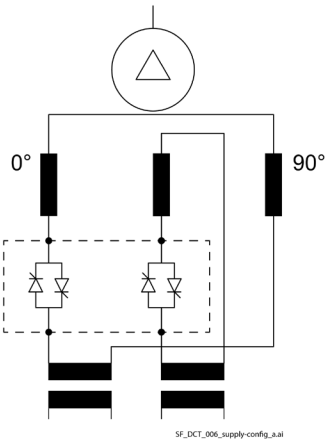 The load is connected via a Scott transformer. Set 99.03 Load Voltage to the connected phase-to-phase voltage (e.g., U2 … V2).						
	9: 3 x 1ph loads; 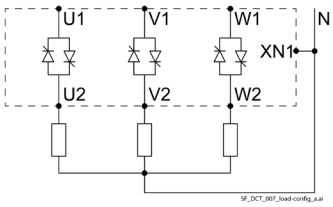 The three loads are connected as single-phase loads to neutral. Also possible for one or two loads or individual loads. Set 99.03 Load Voltage to the connected phase voltage (e.g., U2 … N, L1 … L2, …).						
	10: 3 x 1ph transformer loads; 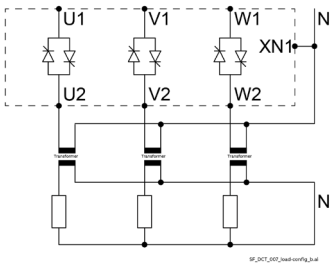 The three loads are connected as single-phase loads via single-phase transformers. Also possible for one or two loads or individual loads. Set 99.03 Load Voltage to the connected phase voltage (e.g., U2 … N, L1 … L2, …).						

Index	Name						
	Text						
	Range	**Default**	**Unit**	**Scale FbEq16**	**Volatile**	**Change running**	**Type**
	0 … 10	3ph star (3S)	-	1 = 1	n	y	Parameter
99.06	**Start UP Macro**						
	Start-up macro depending on the load configuration. Macro to preset parameters in groups 23 … 28 and 30 … 33 according to the used load configuration in 99.05 Load Configuration. The value reverts automatically to Disable when the parameters are set. 0: **Disable**; no macro chosen, normal operation. 1: **3ph star (3S)**; the load is connected in a star configuration. 2: **3ph star + N (4S)**; the load is connected in star configuration with neutral connected to the star point. 3: **3ph delta (3D)**; the load is connected in a delta configuration. 4: **3ph open delta UV (6D)**; the load is connected in an open delta configuration (clockwise phase connection U V W). 5: **3ph open delta UW (6D)**; the load is connected in an open delta configuration (anticlockwise phase connection U W V). 6: **3ph transformer (3D/3S)**; the load is connected via a 3-phase delta or star transformer. 7: **3ph transformer UV (6D)**; the load is connected via a 3-phase open delta transformer (clockwise phase connection U V W). 8: **3ph transformer UW (6D)**; the load is connected via a 3-phase open delta transformer (anticlockwise phase connection U W V). 9: **Scott transformer**; the load is connected via a Scott transformer. 10: **3 x 1ph loads**; the loads are connected as single-phase loads to neutral. 11: **3 x 1ph transformer loads**; the loads are connected as single-phase loads via single-phase transformers.						
	0 … 11	Disable	-	1 = 1	n	n	Parameter
99.07	**Service Mode**						
	99.07 Service Mode contains test modes, help modes and parameter macros. The value reverts automatically to Normal operation when the chosen procedure is finished. Service mode = Set: Type code for: – 95.18 Set: Unit output current scaling. – 95.19 Set: Unit input voltage scaling. Has to be set back to Normal mode by the user. 0: **Normal operation**; no service mode chosen, normal operation. 2: **Factory Reset**; load macro factory (default parameter set). 5: **Set Type Code**; enables the type code parameters of the unit. See 95.16 Set: Unit type code, 95.18 Set: Unit output current scaling and 95.19 Set: Unit input voltage scaling. 6: **Reset Leg 1**; parameters related to leg 1 (groups 23/24/30) are set back to factory values (default values). 7: **Reset Leg 2**; parameters related to leg 2 (groups 25/26/31) are set back to factory values (default values). 8: **Reset Leg 3**; parameters related to leg 3 (groups 27/28/32) are set back to factory values (default values). 9: **Copy Grp 23/24/30/36 to Leg 2**; copies leg 1 parameters from groups 23/24/30/36 to leg 2 parameters in groups 25/26/31/37. 10: **Copy Grp 23/24/30/36 to Leg 3**; copies leg 1 parameters from groups 23/24/30/36 to leg 3 parameters in groups 27/28/32/38. 16: **Thyristor test**; start thyristor test. The result is displayed in the event logger of the control panel/PC tool.						
	0 … 16	Normal operation	-	1 = 1	y	n	Parameter

Index	Name						
	Text						
	Range	**Default**	**Unit**	**Scale FbEq16**	**Volatile**	**Change running**	**Type**
99.08	**External Current Transformer Scaling**						
	External CT scaling. Sets the rated current of external current transformers (CTs) connected to XEXCT on the SDCS-PIN-H11.						
	0.0 … 30000.0	0.0	A	1 = 1 A	n	y	Parameter
99.09	**Load Power**						
	Calculated rated load power. $\frac{power\ leg\ 1\ +\ power\ leg\ 2\ +\ power\ leg\ 3}{3}$ This value equals 100 % power for all relative power signals/parameters. It depends on 99.02 Load Current, 99.03 Load Voltage and 99.05 Load Configuration. **Example:** For star configuration. 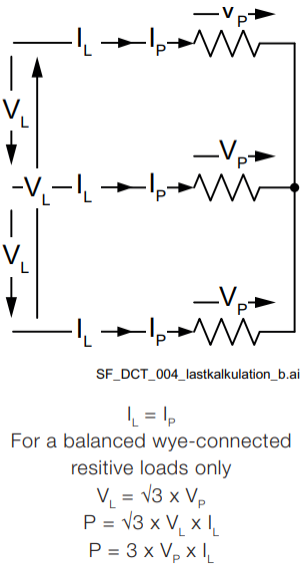 Settings: 99.04 Supply Configuration = 3ph UVW. 99.05 Load Configuration = 3ph Star (3S). V_L = 99.01 Supply voltage = 400 V_{AC}. $V_P = \frac{V_L}{\sqrt{3}}$ = 99.03 Load Voltage = 230 V_{AC}. $I_L = I_P$ = 99.02 Load Current = 50 A. With all the above follows: 99.09 Load Power = $\frac{3 \times V_P \times I_L}{3} = \frac{3 \times 230\ V_{AC} \times 50\ A}{3}$ = 11.5 kW.						
	0.0 … 5000.0	-	kW	10 = 1 kW	y	n	Signal
99.10	**Leg 1 Control Mode**						
	Leg 1 control mode. Selection of control mode for leg 1. 0: **Disable**; leg 1 is off. 1: **Full wave logic ON/OFF**; full wave (burst) is on (= 100 % load power) when 06.08 Used Main Control Word bit 0 = 1. Full wave is off (= 0 % load power) when 06.08 Used Main Control Word bit 0 = 0: 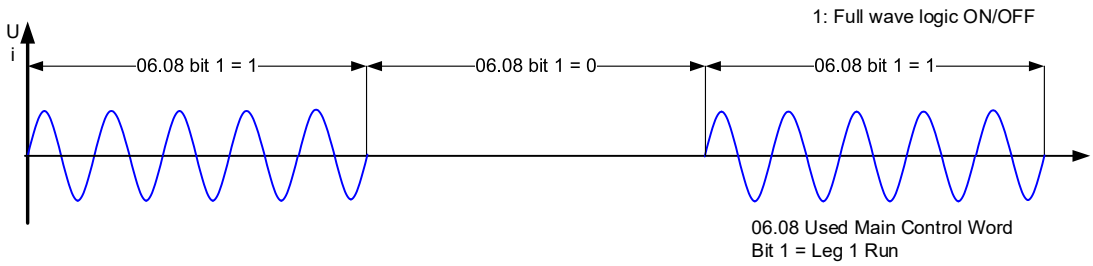 						

2: **Full wave fix cycle**; full wave (burst) with fix cycle control. The load power depends on the ratio of 22.11 Leg 1 Actual Ref and 99.11 Leg 1 Cycle Time:

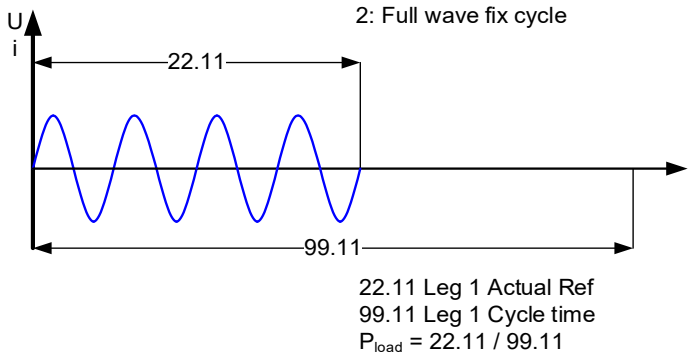

3: **Full wave variable cycle**; full wave (burst) with variable cycle control. There is no predefined cycle time. The power controller calculates the optimal ton/toff ratio by itself. It is possible to define a minimum number of ON or OFF periods by 23.03 Leg 1 Minimum Cycle Variable Burst. The load power depends on the ratio of ON periods divided by the sum of all ON and OFF periods. Thus, the load power depends on 23.03 Leg 1 Minimum Cycle Variable Burst and 22.11 Leg 1 Actual Ref:

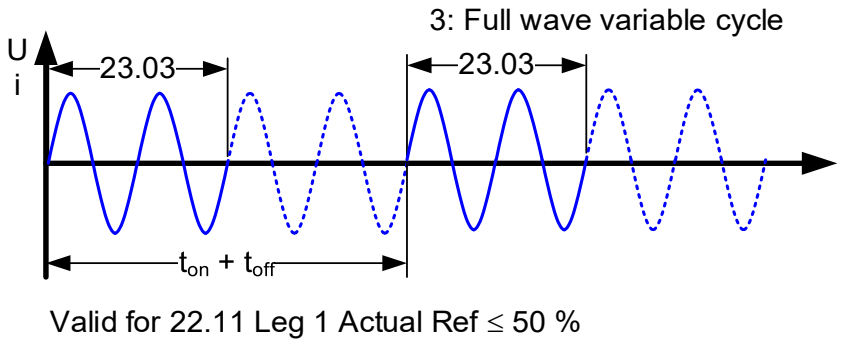

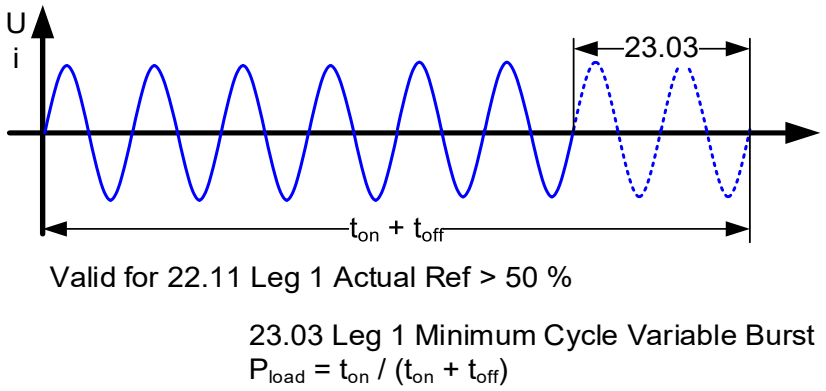

4: **Half wave**; half wave control. Half wave control is especially designed for infrared or ultraviolet lamps. It works similar to full wave (burst) with variable cycle control, but instead of full waves, half waves are controlled. This allows a more precise control with a much faster reaction time. The load power depends on the ratio of ON half waves divided by the sum of all ON and OFF half waves. Thus, the load power depends on 22.11 Leg 1 Actual Ref:

Index	Name						
	Text						
	Range	Default	Unit	Scale FbEq16	Volatile	Change running	Type

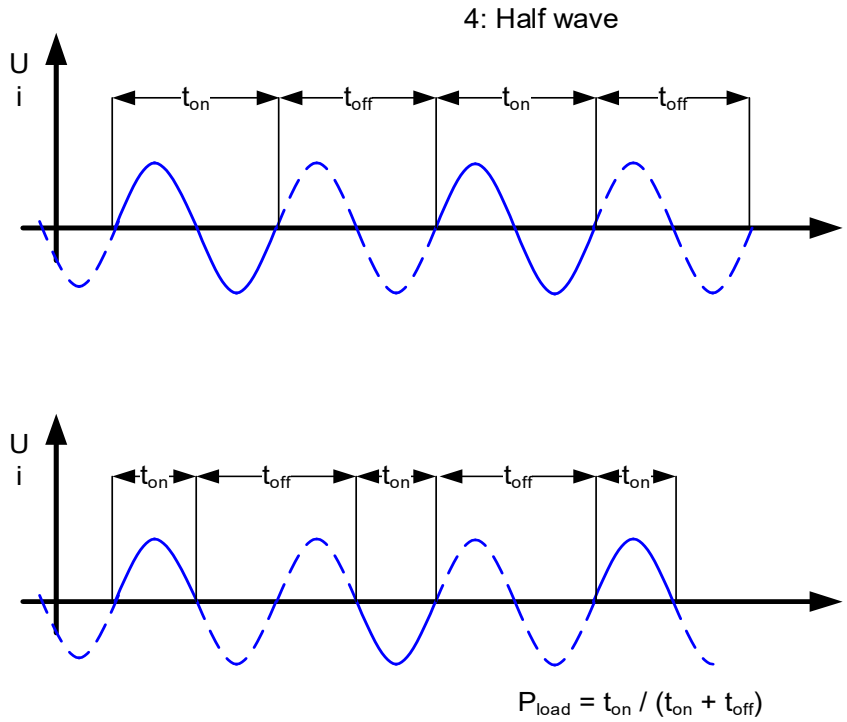

5: **U α open loop control**; phase angle control. The load voltage depends on 23.46 Leg 1 Voltage Control Out open loop (open loop control):

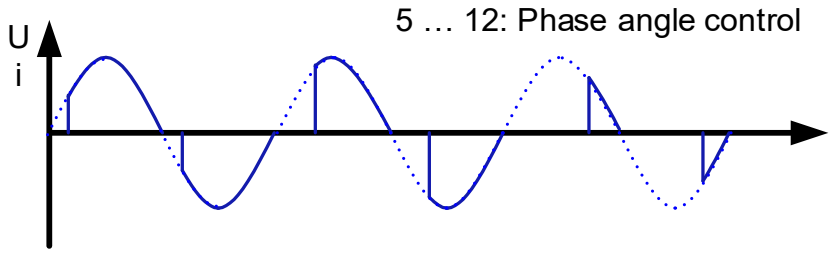

6: **U^2 α open loop control**; phase angle control. The output is proportional to power and depends on 23.46 Leg 1 Voltage Control Out open loop (open loop control).
7: **I α control**; phase angle control. The load current depends on 23.29 Leg 1 Current Control Out (closed loop control).
8: **I^2 α control**; phase angle control. The output is proportional to power and depends on 23.29 Leg 1 Current Control Out (closed loop control).
9: **U α control**; phase angle control. The load voltage depends on 23.45 Leg 1 Voltage Control Out after Current Limit (closed loop control).
10: **U^2 α control**; phase angle control. The output is proportional to power and depends on 23.45 Leg 1 Voltage Control Out after Current Limit (closed loop control).
11: **P α control**; phase angle control. The load power depends on 23.60 Leg 1 Power Control Out after Current Limit (closed loop control).

Index	Name						
	Text						
	Range	**Default**	**Unit**	**Scale FbEq16**	**Volatile**	**Change running**	**Type**
	12: **Leg 1 External Ref 23.65**; phase angle control. Leg 1 external reference in percent of 0 % ≡ 180.0° and 100 % ≡ 0.0°.						
	0 … 12	U a open loop control	-	1 = 1	n	y	Parameter
99.11	**Leg 1 Cycle Time**						
	Leg 1 cycle time. Cycle time for 99.10 Leg 1 Control Mode = Full wave fix cycle (= 2).						
	0 … 6000	100	Periods	1 = 1 Periods	n	y	Parameter
99.12	**Leg 1 Start Mode**						

Leg 1 start.
Defines the start mode of leg 1.
0: **Normal**; unit starts immediately.
1: **First angle**; for transformer loads or weak networks. This prevents the high inrush current of transformers or high starting currents. The first thyristors are fired with the firing angle set in 99.13 Leg 1 First Angle:

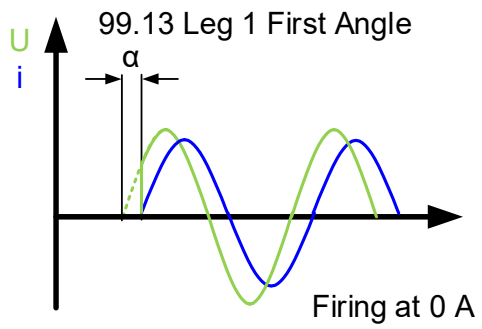

2: **Soft start**; at start the firing angle is moved from 180° … 0° using the number of periods in 99.14 Leg 1 Burst Soft Start Ramp. Switching OFF is done by setting the firing angle directly to 180°.
Note: This influences only the periods after the start of the unit:

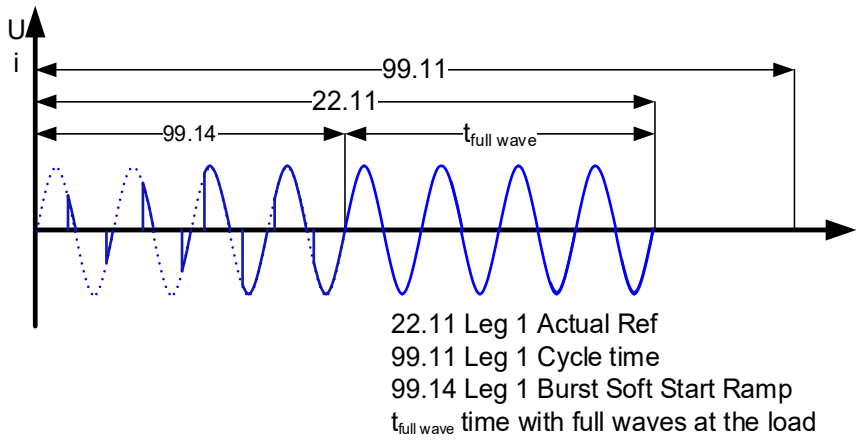

Index	Name						
	Text						
	Range	**Default**	**Unit**	**Scale FbEq16**	**Volatile**	**Change running**	**Type**
	3: **Soft start/Soft down**; at start the firing angle is moved from 180° … 0° using the number of periods in 99.14 Leg 1 Burst Soft Start Ramp. At switching OFF the firing angle is moved to 180° depending on 99.15 Leg 1 Burst Soft Down Ramp. **Note**: This influences only the periods after the start or after switching OFF the unit: 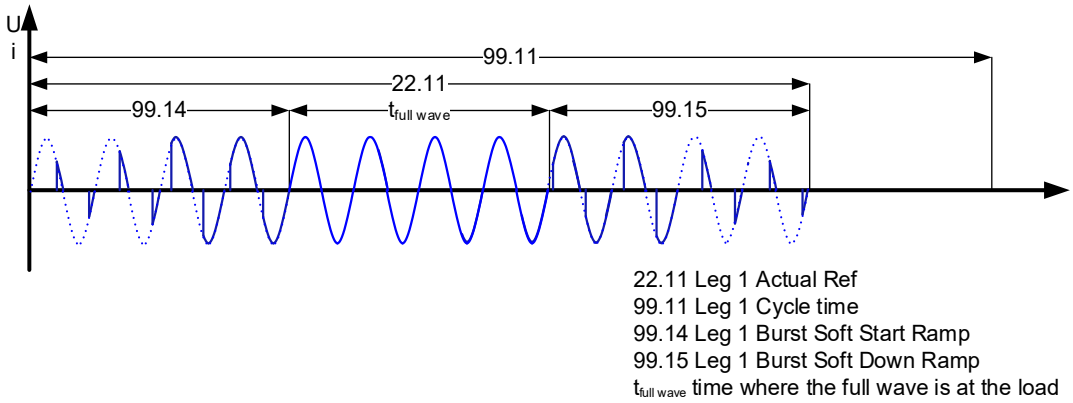 4: **Soft start/First angle**; see 1: First angle and 2: Soft start. **Note**: This mode is recommended for weak mains: 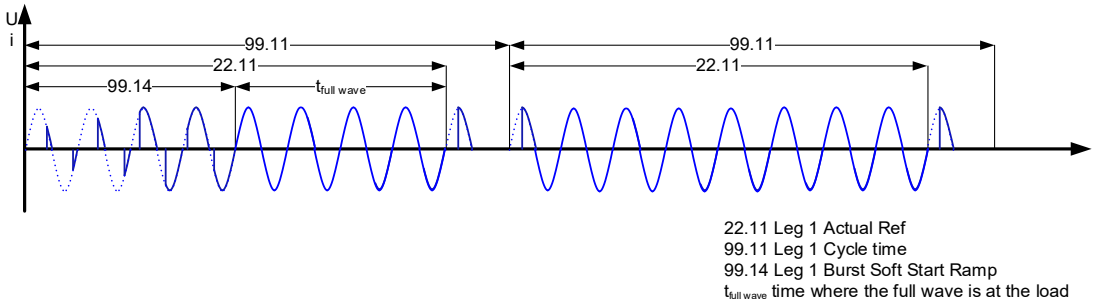 						
	0 … 4	Soft start/soft down	-	1 = 1	n	y	Parameter
99.13	**Leg 1 First Angle**						
	Leg 1 full wave (burst) first angle. Starting angle for leg 1, used for transformer loads. 90.0° is e.g., the phase shift between voltage and current of a transformer. Valid when 99.12 Leg 1 Start Mode = First angle or Soft start/first angle and 99.10 Leg 1 Control Mode = Full wave fix cycle or Full wave variable cycle. **Note**: Recommended setting 75.0° … 115.0°.						
	0.0 … 180.0	90.0	°	10 = 1°	n	y	Parameter
99.14	**Leg 1 Burst Soft Start Ramp**						
	Leg 1 full wave (burst) soft start. Soft start time in periods in which the firing angle is moved from 180° … 0°. Valid when 99.12 Leg 1 Start Mode = Soft start … (= 2 … 4) and 99.10 Leg 1 Control Mode = Full wave fix cycle or Full wave variable cycle.						
	0 … 6000	10	Periods	1 = 1 Periods	n	y	Parameter
99.15	**Leg 1 Burst Soft Down Ramp**						
	Leg 1 full wave (burst) soft down. Soft down ramp in periods in which the firing angle is moved from 0° … 180°.						

Index	Name						
	Text						
	Range	**Default**	**Unit**	**Scale FbEq16**	**Volatile**	**Change running**	**Type**
	Valid when 99.12 Leg 1 Start Mode = Soft start/soft down and 99.10 Leg 1 Control Mode = Full wave fix cycle or Full wave variable cycle.						
	0 … 6000	10	Periods	1 = 1 Periods	n	y	Parameter
99.16	**Leg 1 Phase Angle Soft Start Ramp**						
	Leg 1 phase angle control modes start ramp. Soft start time in which the reference (either 23.22 Leg 1 Current Control Ref 3, 23.37 Leg 1 Voltage Control Ref 3 or 23.52 Leg 1 Power Control Ref 3) is ramped from 0 … 100 %. Valid when 99.10 Leg 1 Control Mode = α controls (= 5 … 12). **Note**: This influences only the positive slope of the reference.						
	0 … 6000	20	Periods	1 = 1 Periods	n	y	Parameter
99.17	**Leg 1 Phase Angle Soft Down Ramp**						
	Leg 1 phase angle control modes down ramp. Soft down time in which the reference (either 23.22 Leg 1 Current Control Ref 3, 23.37 Leg 1 Voltage Control Ref 3 or 23.52 Leg 1 Power Control Ref 3) is ramped from 100 … 0 %. Valid when 99.10 Leg 1 Control Mode = α controls (= 5 … 12). **Note**: This influences only the negative slope of the reference and does not prolong the Run command. A stop command terminates the ramping process.						
	0 … 6000	20	Periods	1 = 1 Periods	n	y	Parameter
99.25	**Leg 2 Control Mode**						
	Leg 2 control mode. Selection of control mode for leg 2. 0 … 12: see 99.10 Leg 1 Control Mode. 12: **Leg 2 External Ref 25.65**; phase angle control. Leg 2 external reference in percent of 0 % ≡ 180.0° and 100 % ≡ 0.0°. 13: **Follow Leg 1**; use the same control mode as leg 1. Set also: – 19.30 Common Control Selector = Follow Leg 1. – 99.40 Leg 3 Control Mode = Follow Leg 1. 14: **Follow Leg 1 alternating**; reserved.						
	0 … 14	Follow leg 1	-	1 = 1	n	y	Parameter
99.26	**Leg 2 Cycle Time**						
	Leg 2 cycle time. Cycle time for 99.25 Leg 2 Control Mode = Full wave fix cycle.						
	0 … 6000	100	Periods	1 = 1 Periods	n	y	Parameter
99.27	**Leg 2 Start Mode**						
	Leg 2 start. Defines the start mode of leg 2. See 99.12 Leg 1 Start Mode.						
	0 … 4	Soft start/soft down	-	1 = 1	n	y	Parameter
99.28	**Leg 2 First Angle**						
	Leg 2 full wave (burst) first angle. Starting angle for leg 2, used for transformer loads. 90.0° is e.g., the phase shift between voltage and current of a transformer. Valid when 99.27 Leg 2 Start Mode = First angle or Soft start/first angle and 99.25 Leg 2 Control Mode = Full wave fix cycle or Full wave variable cycle. **Note**: Recommended setting 75.0° … 115.0°.						
	0.0 … 180.0	90.0	°	10 = 1°	n	y	Parameter
99.29	**Leg 2 Burst Soft Start Ramp**						
	Leg 2 full wave (burst) soft start. Soft start time in periods in which the firing angle is moved from 180° … 0°.						

Index	Name						
	Text						
	Range	**Default**	**Unit**	**Scale FbEq16**	**Volatile**	**Change running**	**Type**
	Valid when 99.27 Leg 2 Start Mode = Soft start … (= 2 … 4) and 99.25 Leg 2 Control Mode = Full wave fix cycle or Full wave variable cycle.						
	0 … 6000	10	Periods	1 = 1 Periods	n	y	Parameter
99.30	**Leg 2 Burst Soft Down Ramp**						
	Leg 2 full wave (burst) soft down. Soft down ramp in periods in which the firing angle is moved from 0° … 180°. Valid when 99.27 Leg 2 Start Mode = Soft start/soft down and 99.25 Leg 2 Control Mode = Full wave fix cycle or Full wave variable cycle.						
	0 … 6000	10	Periods	1 = 1 Periods	n	y	Parameter
99.31	**Leg 2 Phase Angle Soft Start Ramp**						
	Leg 2 phase angle control modes start ramp. Soft start time in which the reference (either 25.22 Leg 2 Current Control Ref 3, 25.37 Leg 2 Voltage Control Ref 3 or 25.52 Leg 2 Power Control Ref 3) is ramped from 0 … 100 %. Valid when 99.25 Leg 2 Control Mode = α controls (= 5 … 12). **Note**: This influences only the positive slope of the reference.						
	0 … 6000	20	Periods	1 = 1 Periods	n	y	Parameter
99.32	**Leg 2 Phase Angle Soft Down Ramp**						
	Leg 2 phase angle control modes down ramp. Soft down time in which the reference (either 25.22 Leg 1 Current Control Ref 3, 25.37 Leg 1 Voltage Control Ref 3 or 25.52 Leg 1 Power Control Ref 3) is ramped from 100 … 0 %. Valid when 99.25 Leg 1 Control Mode = α controls (= 5 … 12). **Note**: This influences only the negative slope of the reference and does not prolong the Run command. A stop command terminates the ramping process.						
	0 … 6000	20	Periods	1 = 1 Periods	n	y	Parameter
99.40	**Leg 3 Control Mode**						
	Leg 3 control mode. Selection of control mode for leg 3. 0 … 12: see 99.10 Leg 1 Control Mode. 12: **Leg 3 External Ref 27.65**; phase angle control. Leg 3 external reference in percent of 0 % ≡ 180.0° and 100 % ≡ 0.0°. 13: **Follow Leg 1**; use the same control mode as leg 1. Set also: – 19.30 Common Control Selector = Follow Leg 1. – 99.25 Leg 2 Control Mode = Follow Leg 1. 14: **Follow Leg 1 alternating**; reserved.						
	0 … 14	Follow Leg 1	-	1 = 1	n	y	Parameter
99.41	**Leg 3 Cycle Time**						
	Leg 3 cycle time. Cycle time for 99.40 Leg 3 Control Mode = Full wave fix cycle.						
	0 … 6000	100	Periods	1 = 1 Periods	n	y	Parameter
99.42	**Leg 3 Start Mode**						
	Leg 3 start. Defines the start mode of leg 3. See 99.12 Leg 1 Start Mode.						
	0 … 4	Soft start/soft down	-	1 = 1	n	y	Parameter
99.43	**Leg 3 First Angle**						
	Leg 3 full wave (burst) first angle. Starting angle for leg 3, used for transformer loads. 90.0° is e.g., the phase shift between voltage and current of a transformer. Valid when 99.42 Leg 3 Start Mode = First angle or Soft start/first angle and 99.40 Leg 3 Control Mode = Full wave fix cycle or Full wave variable cycle. **Note**: Recommended setting 75.0° … 115.0°.						

Index	Name						
	Text						
	Range	Default	Unit	Scale FbEq16	Volatile	Change running	Type
	0.0 … 180.0	90.0	°	10 = 1°	n	y	Parameter
99.44	**Leg 3 Burst Soft Start Ramp**						
	Leg 3 full wave (burst) soft start. Soft start time in periods in which the firing angle is moved from 180° … 0°. Valid when 99.42 Leg 3 Start Mode = Soft start … (= 2 … 4) and 99.40 Leg 3 Control Mode = Full wave fix cycle or Full wave variable cycle.						
	0 … 6000	10	Periods	1 = 1 Periods	n	y	Parameter
99.45	**Leg 3 Burst Soft Down Ramp**						
	Leg 3 full wave (burst) soft down. Soft down ramp in periods in which the firing angle is moved from 0° … 180°. Valid when 99.42 Leg 3 Start Mode = Soft start/soft down and 99.40 Leg 3 Control Mode = Full wave fix cycle or Full wave variable cycle.						
	0 … 6000	10	Periods	1 = 1 Periods	n	y	Parameter
99.46	**Leg 3 Phase Angle Soft Start Ramp**						
	Leg 3 phase angle control modes start ramp. Soft start time in which the reference (either 27.22 Leg 3 Current Control Ref 3, 27.37 Leg 3 Voltage Control Ref 3 or 27.52 Leg 3 Power Control Ref 3) is ramped from 0 … 100 %. Valid when 99.40 Leg 3 Control Mode = α controls (= 5 … 12). **Note**: This influences only the positive slope of the reference.						
	0 … 6000	20	Periods	1 = 1 Periods	n	y	Parameter
99.47	**Leg 3 Phase Angle Soft Down Ramp**						
	Leg 3 phase angle control modes down ramp. Soft down time in which the reference (either 27.22 Leg 1 Current Control Ref 3, 27.37 Leg 1 Voltage Control Ref 3 or 27.52 Leg 1 Power Control Ref 3) is ramped from 100 … 0 %. Valid when 99.40 Leg 1 Control Mode = α controls (= 5 … 12). **Note**: This influences only the negative slope of the reference and does not prolong the Run command. A stop command terminates the ramping process.						
	0 … 6000	20	Periods	1 = 1 Periods	n	y	Parameter
99.60	**Voltage Measurement Configuration**						
	Output voltage measurement configuration. 99.60 Voltage Measurement Configuration describes how the voltages of output phases U2, V2, W2 are measured or calculated. The values can be seen in 01.60 Leg 1 Voltage RMS relative actual, 01.61 Leg 2 Voltage RMS relative actual and 01.62 Leg 3 Voltage RMS relative actual. **Note:** See chapters External measurement of output voltage and output current (CTs) and Measurement of the mains voltage, output voltage and output current (CTs). 0: **UVW1**; the input phase voltages U1, V1, W1 are measured. The output phase voltages U2, V2, W2 and N1 (neutral) are calculated depending on the firing angle, see 99.04 Supply Configuration and 99.05 Load Configuration.						

Index	Name						
	Text						
	Range	Default	Unit	Scale FbEq16	Volatile	Change running	Type
	1: **UVW1+N1**; the input phase voltages U1, V1,W1 and N1 (neutral) are measured. The output phase voltages U2, V2, W2 are calculated depending on the firing angle, see 99.04 Supply Configuration, and 99.05 Load Configuration. The voltage of N1 (neutral) is measured via: – XN1 (X54) on the SDCS-PIN-H11 (T1 … T5 and T6 special design). 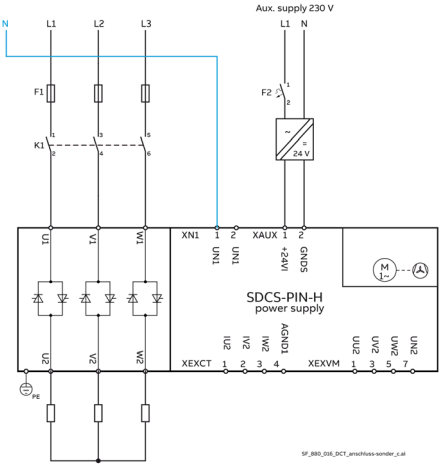 – N1 at the body of the unit (T6 standard and T8). 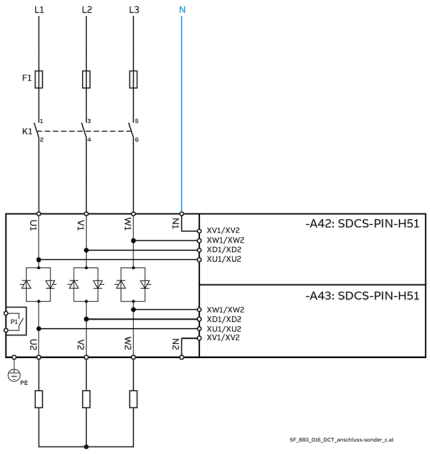 2: **UVW1 and X60 UVW2**; the input phase voltages U1, V1 and W1 are measured. Additionally, the output phase voltages U2, V2, W2 are measured against each other via: – XEXVM (X60) on the SDCS-PIN-H11 directly at the output (T1 … T5 and T6 special design). 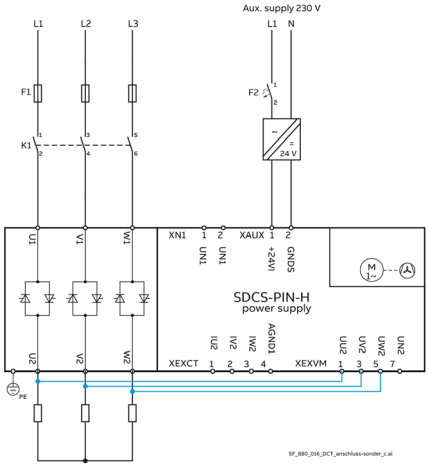 						

Index	Name						
	Text						
	Range	Default	Unit	Scale FbEq16	Volatile	Change running	Type
	– XU1/XU2, XXD1/XD2 and XW1/XW2 on the SDCS-PIN-H51 with location code -A43 (T6 standard and T8). 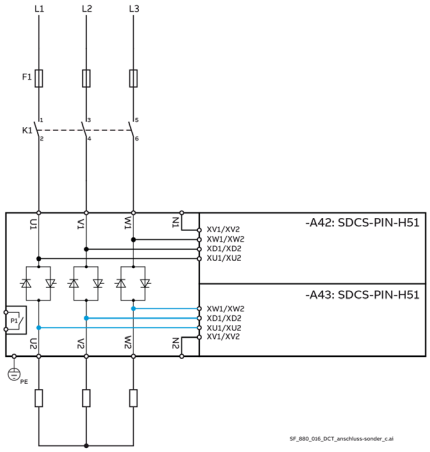 3: **UVW1 and X60 UVW2+N2**; the input phase voltages U1, V1 and W1 are measured. Additionally, the output phase voltages U2, V2, W2 are measured against N2 (neutral) via: – XEXVM (X60) on the SDCS-PIN-H11 directly at the output (T1 … T5 and T6 special design). 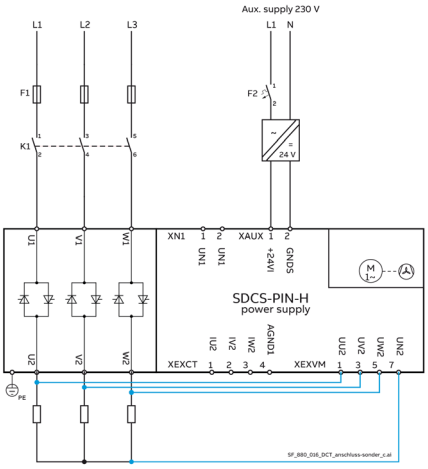 – XU1/XU2, XXD1/XD2, XW1/XW2 and XV1/XV2 (via N2 at the body of the unit) on the SDCS-PIN-H51 with location code -A43 (T6 standard and T8). 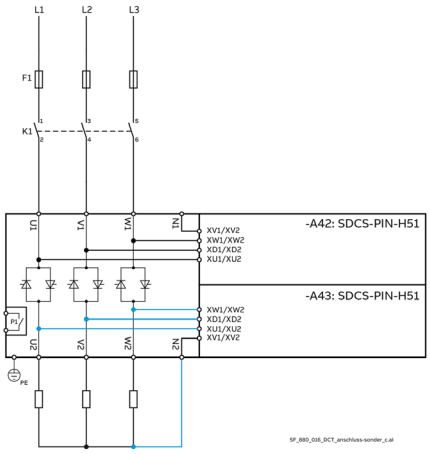 						

Index	Name						
	Text						
	Range	Default	Unit	Scale FbEq16	Volatile	Change running	Type
	4: **UVW1 and X60 Uext**; the input phase voltages U1, V1 and W1 are measured. Additionally, the output phase voltages U2, V2, W2 are measured against each other via: – XEXVM (X60) on the SDCS-PIN-H11 e.g., after a transformer, directly at the load (T1 … T5 and T6 special design). 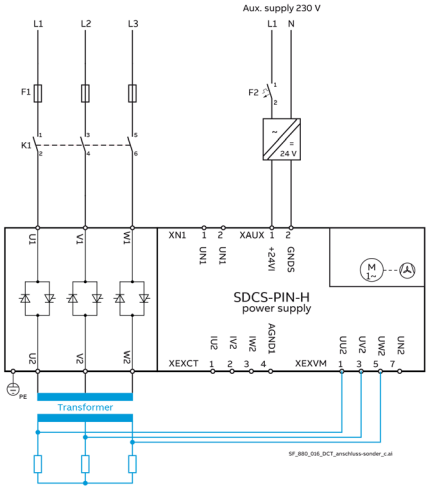 – XU1/XU2, XXD1/XD2 and XW1/XW2 on the SDCS-PIN-H51 with location code -A43 e.g., after a transformer, directly at the load (T6 standard and T8). 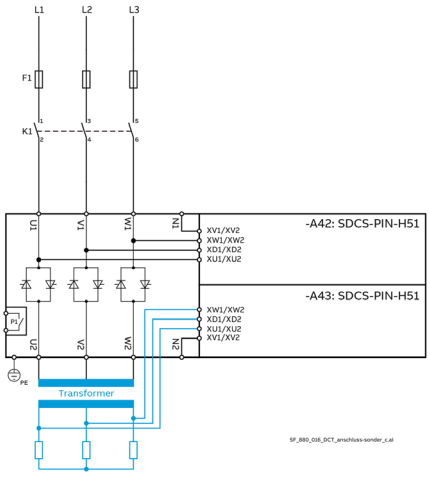 5: **UVW1 and X60 Uext+N2**; the input phase voltages U1, V1 and W1 are measured. Additionally, the output phase voltages U2, V2, W2 are measured against N2 (neutral) via: – XEXVM (X60) on the SDCS-PIN-H11 e.g., after a transformer, directly at the load (T1 … T5 and T6 special design). 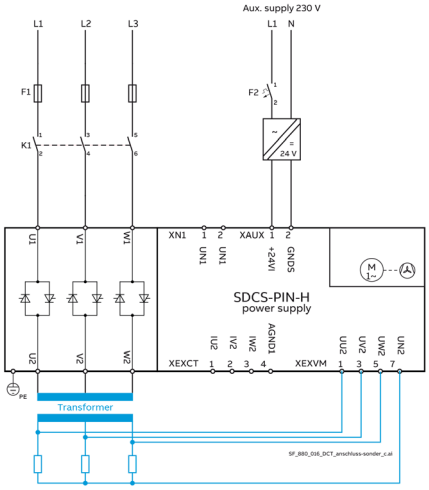 						

Index	Name						
	Text						
	Range	Default	Unit	Scale FbEq16	Volatile	Change running	Type
	– XU1/XU2, XXD1/XD2, XW1/XW2 and XV1/XV2 (via N2 at the body of the unit) on the SDCS-PIN-H51 with location code -A43 e.g., after a transformer, directly at the load (T6 standard and T8). 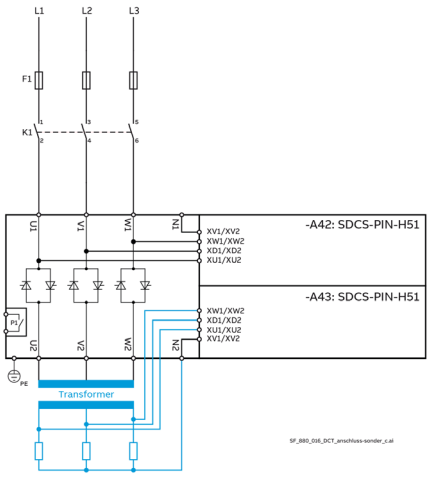 **Note:** For settings 99.60 Voltage Measurement Configuration = UVW1 and X60 Uext or UVW1 and X60 Uext+N2 (= 4, 5) see 99.61 Load Transformer Primary Voltage and 99.62 Load Transformer Secondary Voltage.						
	0 … 5	UVW1	-	1 = 1	n	y	Parameter
99.61	**Load Transformer Primary Voltage**						
	Primary voltage of a transformer (see nameplate) connected to the load side (U2, V2, W2) of the unit. This information is needed for 99.60 Voltage Measurement Configuration = UVW1 and X60 Uext or UVW1 and X60 Uext+N2 (= 4, 5).						
	0.0 … 3250.0	380.0	V	10 = 1 V	n	y	Parameter
99.62	**Load Transformer Secondary Voltage**						
	Secondary voltage of a transformer (see nameplate) connected to the load side (U2, V2, W2) of the unit. This information is needed for 99.60 Voltage Measurement Configuration = UVW1 and X60 Uext or UVW1 and X60 Uext+N2 (= 4, 5).						
	0.0 … 3250.0	380.0	V	10 = 1 V	n	y	Parameter
99.64	**Leg 1 Voltage Feedback**						
	Leg 1, output phase U2 voltage feedback source. Leg 1 source for the actual voltage of the voltage controller. The value can be seen in 23.38 Leg 1 Voltage Actual: 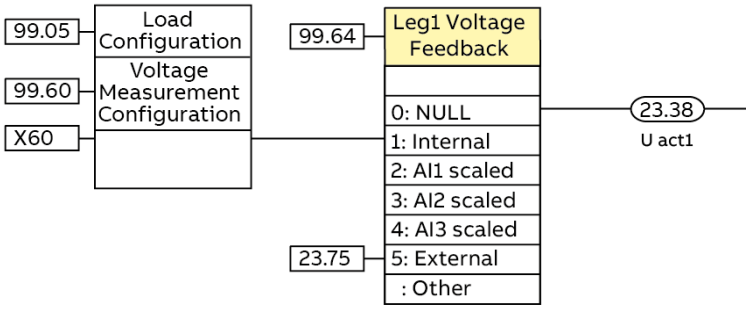 **Other**; source selection. 0: **NULL**; no voltage feedback selected. The output value is forced to zero. 1: **Internal (01.60)**; U2 internal voltage feedback, see 99.60 Voltage Measurement Configuration. 2: **AI1 scaled (12.12)**; U2 voltage feedback via analog input 1. 3: **AI2 scaled (12.22)**; U2 voltage feedback via analog input 2. 4: **AI3 scaled (12.32)**; U2 voltage feedback via analog input 3. 5: **External (23.75)**; U2 voltage feedback via overriding control system.						
	0 … 5	Internal (01.60)	-	1 = 1	n	y	Parameter

Index	Name						
	Text						
	Range	Default	Unit	Scale FbEq16	Volatile	Change running	Type
99.65	**Leg 2 Voltage Feedback**						
	Leg 2, output phase V2 voltage feedback source. Leg 2 source for the actual voltage of the voltage controller. The value can be seen in 25.38 Leg 2 Voltage Actual: 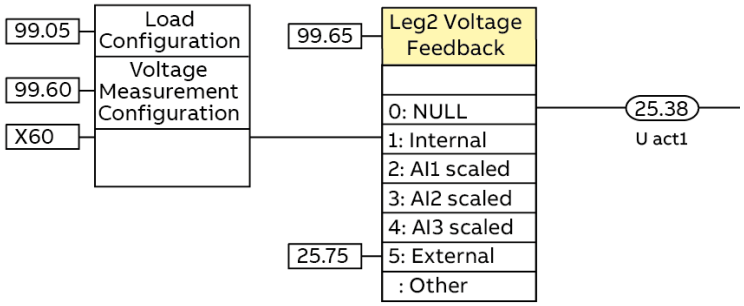 **Other**; source selection. 0: **NULL**; no voltage feedback selected. The output value is forced to zero. 1: **Internal (01.61)**; V2 internal voltage feedback, see 99.60 Voltage Measurement Configuration. 2: **AI1 scaled (12.12)**; V2 voltage feedback via analog input 1. 3: **AI2 scaled (12.22)**; V2 voltage feedback via analog input 2. 4: **AI3 scaled (12.32)**; V2 voltage feedback via analog input 3. 5: **External (25.75)**; V2 voltage feedback via overriding control system.						
	0 … 5	Internal (01.61)	-	1 = 1	n	y	Parameter
99.66	**Leg 3 Voltage Feedback**						
	Leg 3, output phase W2 voltage feedback source. Leg 3 source for the actual voltage of the voltage controller. The value can be seen in 27.38 Leg 3 Voltage Actual: 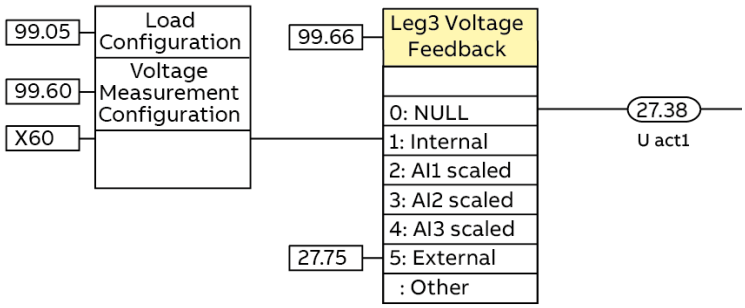 **Other**; source selection. 0: **NULL**; no voltage feedback selected. The output value is forced to zero. 1: **Internal (01.62)**; W2 internal voltage feedback, see 99.60 Voltage Measurement Configuration. 2: **AI1 scaled (12.12)**; W2 voltage feedback via analog input 1. 3: **AI2 scaled (12.22)**; W2 voltage feedback via analog input 2. 4: **AI3 scaled (12.32)**; W2 voltage feedback via analog input 3. 5: **External (27.75)**; W2 voltage feedback via overriding control system.						
	0 … 5	Internal (01.62)	-	1 = 1	n	y	Parameter
99.70	**Current Measurement Configuration**						
	Output current measurement configuration. 99.70 Current Measurement Configuration describes how the current of output phases U2, V2, W2 are measured or calculated. The values can be seen in 01.33 Leg 1 Current RMS relative actual, 01.34 Leg 2 Current RMS relative actual and 01.35 Leg 3 Current RMS relative actual. 0: **Internal, measure phase V**; the output phase U2, V2, W2 currents are measured internally. This is possible in units W03. For units W02 a 3rd internal or external CT is needed.						

Index	Name						
	Text						
	Range	Default	Unit	Scale FbEq16	Volatile	Change running	Type
	1: **Internal, calculate phase V**; the output phase U2, W2 currents are measured internally. Output phase V2 current is calculated. This is needed for units W02 without a 3rd internal or external CT. 2: **External star**; the output phase U2, V2, W2 currents are measured via external CTs connected at: – XEXCT (X65) on the SDCS-PIN-H11 via the SDCS-CMI-H02 (T1 … T5 and T6 special design). – X65 on the on the SDCS-PIN-H51 with location code -A43 via the SDCS-CMI-H02 (T6 standard and T8). The load is a star configuration. 3: **External delta**; the output phase U2, V2, W2 currents are measured via external CTs connected at: – XEXCT (X65) on the SDCS-PIN-H11 via the SDCS-CMI-H02 (T1 … T5 and T6 special design). – X65 on the on the SDCS-PIN-H51 with location code -A43 via the SDCS-CMI-H02 (T6 standard and T8). The load is a delta configuration. **Note:** See chapter Interface board SDCS-CMI-H02, current measurement.						
	0 … 3	Internal, phase V measured	-	1 = 1	n	y	Parameter
99.74	**Leg 1 Current Feedback**						
	Leg 1, output phase U2 current feedback source. Leg 1 source for the actual current of the current controller. The value can be seen in 23.23 Leg 1 Current Actual: 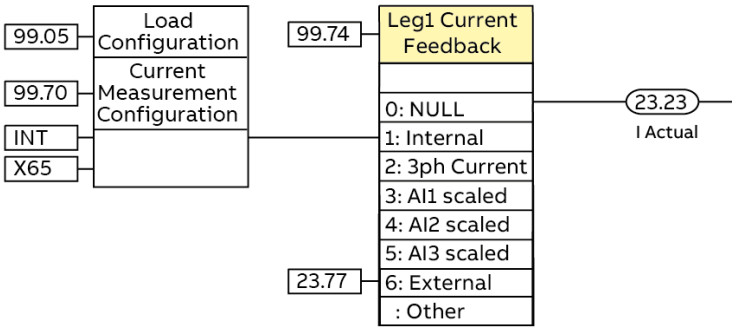 **Other**; source selection. 0: **NULL**; no current feedback selected. The output value is forced to zero. 1: **Internal (01.33)**; U2 internal current feedback, see 99.70 Current Measurement Configuration. 2: **3ph current (01.37)**; 3-phase current feedback for delta load configurations. 3: **AI1 scaled (12.12)**; U2 current feedback via analog input 1. 4: **AI2 scaled (12.22)**; U2 current feedback via analog input 2. 5: **AI3 scaled (12.32)**; U2 current feedback via analog input 3. 6: **External (23.77)**; U2 current feedback via overriding control system.						
	0 … 6	Internal (01.33)	-	1 = 1	n	y	Parameter
99.75	**Leg 2 Current Feedback**						
	Leg 2, output phase V2 current feedback source. Leg 2 source for the actual current of the current controller. The value can be seen in 25.23 Leg 2 Current Actual:						

Index	Name						
	Text						
	Range	Default	Unit	Scale FbEq16	Volatile	Change running	Type
	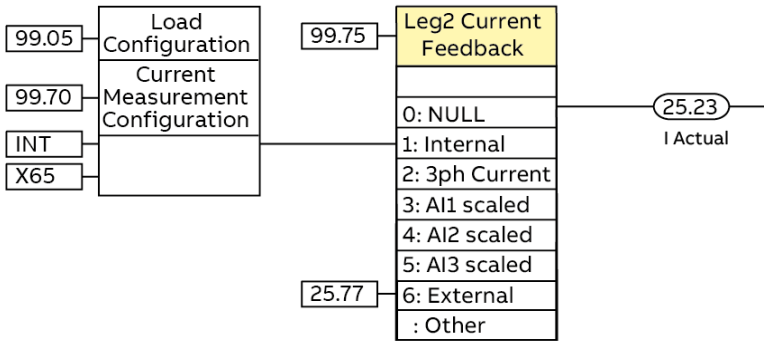 **Other**; source selection. 0: **NULL**; no current feedback selected. The output value is forced to zero. 1: **Internal (01.34)**; V2 internal current feedback, see 99.70 Current Measurement Configuration. 2: **3ph current (01.37)**; 3-phase current feedback for delta load configurations. 3: **AI1 scaled (12.12)**; V2 current feedback via analog input 1. 4: **AI2 scaled (12.22)**; V2 current feedback via analog input 2. 5: **AI3 scaled (12.32)**; V2 current feedback via analog input 3. 6: **External (25.77)**; V2 current feedback via overriding control system.						
	0 … 6	Internal (01.34)	-	1 = 1	n	y	Parameter
99.76	**Leg 3 Current Feedback**						
	Leg 3, output phase W2 current feedback source. Leg 3 source for the actual current of the current controller. The value can be seen in 27.23 Leg 3 Current Actual: 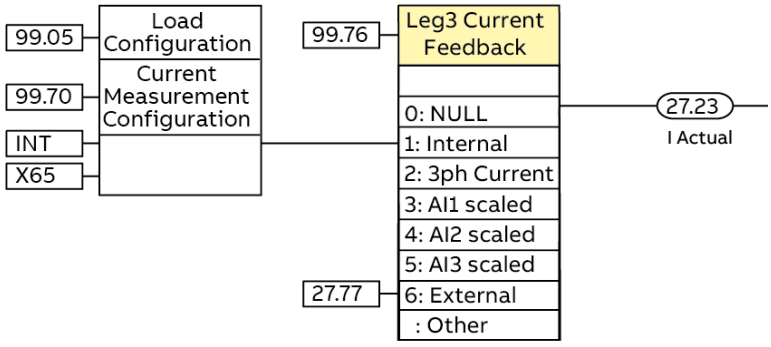 **Other**; source selection. 0: **NULL**; no current feedback selected. The output value is forced to zero. 1: **Internal (01.35)**; W2 internal current feedback, see 99.70 Current Measurement Configuration. 2: **3ph current (01.37)**; 3-phase current feedback for delta load configurations. 3: **AI1 scaled (12.12)**; W2 current feedback via analog input 1. 4: **AI2 scaled (12.22)**; W2 current feedback via analog input 2. 5: **AI3 scaled (12.32)**; W2 current feedback via analog input 3. 6: **External (27.77)**; W2 current feedback via overriding control system.						
	0 … 6	Internal (01.35)	-	1 = 1	n	y	Parameter
99.84	**Leg 1 Power Feedback**						
	Leg 1, output phase U2 power feedback source. Leg 1 source for the actual power of the power controller. The value can be seen in 23.53 Leg 1 Power Actual:						

Index	Name						
	Text						
	Range	Default	Unit	Scale FbEq16	Volatile	Change running	Type
	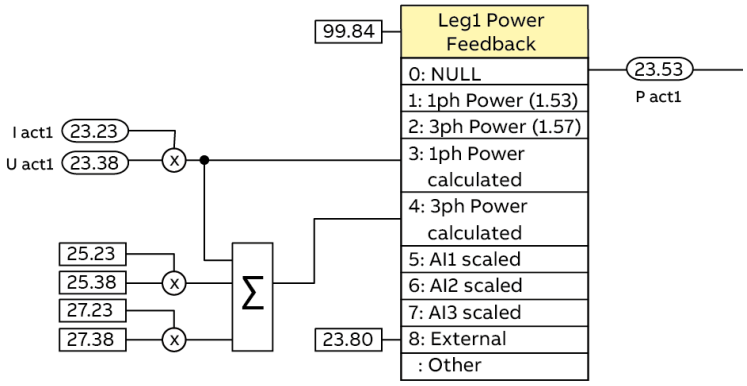 **Other**; source selection. 0: **NULL**; no power feedback selected. The output value is forced to zero. 1: **1ph Power (01.53)**; U2 power feedback measured internally for single controlled load configurations. 2: **3ph Power (01.57)**; 3-phase power feedback measured internally for delta/star load configurations. 3: **1ph Power calculate**; U2 power feedback calculated for single controlled load configurations. 4: **3ph Power calculate**; 3-phase power feedback calculated for delta/star load configurations. 5: **AI1 scaled (12.12)**; U2 power feedback via analog input 1. 6: **AI2 scaled (12.22)**; U2 power feedback via analog input 2. 7: **AI3 scaled (12.32)**; U2 power feedback via analog input 3. 8: **External (23.80)**; U2 power feedback via overriding control system.						
	0 … 8	1ph Power (01.53)	-	1 = 1	n	y	Parameter
99.85	**Leg 2 Power Feedback**						
	Leg 2, output phase V2 power feedback source. Leg 2 source for the actual power of the power controller. The value can be seen in 25.53 Leg 2 Power Actual: 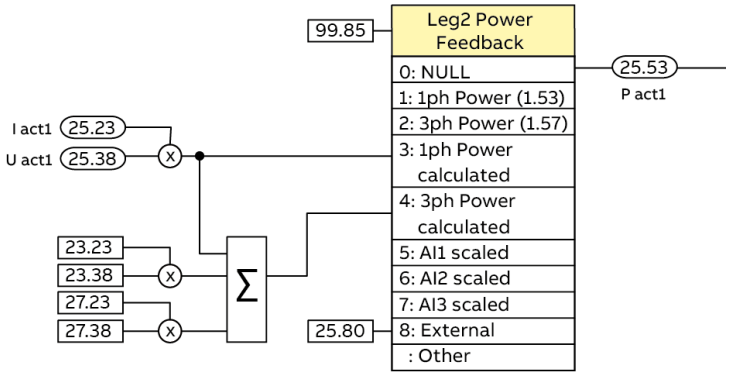 **Other**; source selection. 0: **NULL**; no power feedback selected. The output value is forced to zero. 1: **1ph Power (01.54)**; V2 power feedback measured internally for single controlled load configurations. 2: **3ph Power (01.57)**; 3-phase power feedback measured internally for delta/star load configurations. 3: **1ph Power calculate**; V2 power feedback calculated for single controlled load configurations. 4: **3ph Power calculate**; 3-phase power feedback calculated for delta/star load configurations. 5: **AI1 scaled (12.12)**; V2 power feedback via analog input 1. 6: **AI2 scaled (12.22)**; V2 power feedback via analog input 2.						

Index	Name						
	Text						
	Range	Default	Unit	Scale FbEq16	Volatile	Change running	Type
	7: **AI3 scaled (12.32)**; V2 power feedback via analog input 3. 8: **External (25.80)**; V2 power feedback via overriding control system.						
	0 … 8	1ph Power (01.54)	-	1 = 1	n	y	Parameter
99.86	**Leg 3 Power Feedback**						
	Leg 3, output phase W2 power feedback source. Leg 3 source for the actual power of the power controller. The value can be seen in 27.53 Leg 3 Power Actual: 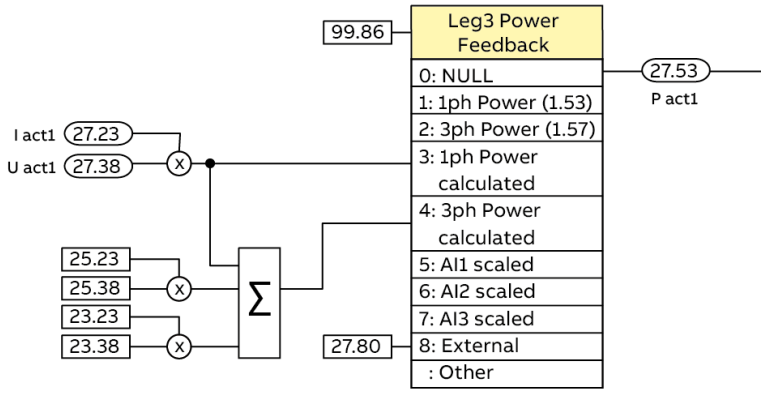 **Other**; source selection. 0: **NULL**; no power feedback selected. The output value is forced to zero. 1: **1ph Power (01.55)**; W2 power feedback measured internally for single controlled load configurations. 2: **3ph Power (01.57)**; 3-phase power feedback measured internally for delta/star load configurations. 3: **1ph Power calculate**; W2 power feedback calculated for single controlled load configurations. 4: **3ph Power calculate**; 3-phase power feedback calculated for delta/star load configurations. 5: **AI1 scaled (12.12)**; W2 power feedback via analog input 1. 6: **AI2 scaled (12.22)**; W2 power feedback via analog input 2. 7: **AI3 scaled (12.32)**; W2 power feedback via analog input 3. 8: **External (27.80)**; W2 power feedback via overriding control system.						
	0 … 8	1ph Power (01.55)	-	1 = 1	n	y	Parameter

Fault tracing

This chapter lists all warning/fault messages including probable causes and corrective actions. By means of this chapter, the causes of all warnings/faults can be identified and corrected. If not, an ABB service representative should be contacted.
Warnings/faults are listed below in separate tables. Each table is sorted by warning and fault code.

Safety

	WARNING Only qualified electricians are allowed to service the unit. Read the Safety instruction on the first pages of this manual before working on it.

If any of the protective functions has been activated do the following:
- Check that all Run commands are set to OFF.
- Disconnect the mains voltage and auxiliary voltage, wait at least two minutes, and follow the safety rules.
- Remove the cause of the trip.
- Reset the fault.

Attention, injury may occur:
- If the fault is reset while any Run commands are set to ON, the power controller will supply power to the load.
- Even if the power controller has interrupted power to the load, as long as mains voltage is applied to the input terminals U1/V1/W1, voltage may be at the output terminals U2/V2/W2.
  Make sure, using a multimeter or a similar instrument, that the voltage between the terminals U1/V1/W1 and U2/V2/W2 has dropped to the safe level (+25 V_{DC} or below).
  Otherwise, electric shock may occur.

Protective functions

The DCT880 power controller has various protective functions as listed below to prevent the system from going down and reduce system downtime.
One of the protective functions is the fault. Upon detection of an abnormal state a fault code is displayed, and the power controller trips.
A warning displays the warning code but lets the power controller continue the current operation.
If any problem arises, understand the protective functions listed below and follow the procedures given in the following section and onwards for troubleshooting.
All indications are stored in the event log with a time stamp and other information. The event log stores information on the last 5 faults that tripped the unit and the last 20 secondary events that occurred. The event log can be accessed from the main Menu of the control panel. It can also be accessed (and reset) using the PC tool.

Protective function	Description
Warnings	This function detects an abnormal state categorized as a warning. A warning code is displayed, and the power controller continues the current operation without tripping. It is possible to define which abnormal load states should be categorized as a warning using parameters in groups 36 … 38. For details of each warning code, see Warnings and AUX codes.
Fault	This function detects an abnormal state, displays the corresponding fault code, and causes the power controller to trip. For details of each fault code, see Faults and AUX codes.
Auto Reset	When the power controller has stopped because of a trip, this function allows the power controller to automatically reset and restart itself. The number of retries and the waiting time between stop and reset can be specified.
Reset	This function enables a reset of any protective function/faults.

Before proceeding with troubleshooting

Follow the procedure below to solve problems:

- First, check that the power controller is correctly wired, see chapter Wiring.
- Check, whether a warning- or fault code is displayed on the PC tool, control panel or 7-segment display.
- If a warning code appears, go to the warning description, see Warnings and AUX codes.
- If a fault code appears, go to the fault description, see Faults and AUX codes.
- If any problems persist after the above recovery procedure, contact your ABB representative.

Messages

Display of status messages, fault, and warning signals

A seven-segment display (V301) is located on the control board SDCS-CON-H01, and it shows the state of the unit:

P. then b.	Power up, firmware is not yet running.
.	Dot is slowly flashing (1 s), firmware is running. No warnings, no faults.
L	Indication while loading firmware into the SDCS-CON-H01.
A	Warning.
F	Fault.

The seven-segment display shows the event in code. The letters and numbers of multi-character codes are displayed one after the other for 0.5 seconds at a time. Plain text messages are available on the control panel and in the fault logger of Drive Composer.

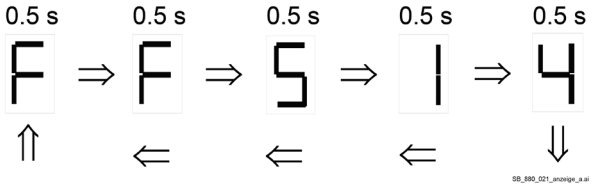

F514 Mains synchronization lost.

Status messages

Status messages will only be indicated on the seven-segment display of the SDCS-CON-H01.

7-segment display	Text on control panel, and Drive Composer	Definition
P. then b.	Not available.	Power up, firmware is yet not running.
.	Not available.	Dot is slowly flashing (1 s), firmware is running. No warnings, no faults.
L	Not available.	Indication while loading firmware into the SDCS-CON-H01.

Numerical list of warning and fault codes

If the power controller detects an event, check whether any warning or fault code appears on the PC tool, the control panel, or the 7-segment display.
As listed below, some warnings and fault codes are followed by auxiliary codes (see event log in the PC tool) that show detailed problem causes.

Overview

Type	From	To
Notices	7100	7199
Events	8100	8199
User events	8300	8399
DCT880 leg 1 warnings	2100	2199
DCT880 leg 2 warnings	2200	2299
DCT880 leg 3 warnings	2300	2399
DCT800 global warnings	2800	2899
Warnings	1100	1299
User warnings	1300	1399
DCT880 leg 1 faults	3100	3199
DCT880 leg 2 faults	3200	3299
DCT880 leg 3 faults	3300	3399
DCT800 global faults	3800	3899
Faults 1	5200	5299
Faults 2	5500	5599
User faults	5600	5699

From	To	Type
1100	1299	Warnings
1300	1399	User warnings
2100	2199	DCT880 leg 1 warnings
2200	2299	DCT880 leg 2 warnings
2300	2399	DCT880 leg 3 warnings
2800	2899	DCT800 global warnings
3100	3199	DCT880 leg 1 faults
3200	3299	DCT880 leg 2 faults
3300	3399	DCT880 leg 3 faults
3800	3899	DCT800 global faults
5200	5299	Faults 1
5500	5599	Faults 2
5600	5699	User faults
7100	7199	Notices
8100	8199	Events
8300	8399	User events
FB00	FBFF	Bootloader faults

Warnings and AUX codes

General warnings

Code	Warning/Notice	Cause and what to do
1122	FBA A parameter conflict.	Fieldbus adapter A (FBA A): The unit does not have a functionality requested by a PLC or a requested functionality has not been activated. The settings of parameter groups 50 Fieldbus adapter (FBA) and 51 FBA A settings are not set according to the fieldbus adapter, or the device has not been selected. Check: – The PLC programming. – The settings of parameter groups 50 Fieldbus adapter (FBA) and 51 FBA A settings. – The configuration of the fieldbus adapter.
1123	FBA B parameter conflict.	Fieldbus adapter B (FBA B): The unit does not have a functionality requested by a PLC or a requested functionality has not been activated. The settings of parameter groups 50 Fieldbus adapter (FBA) and 54 FBA B settings are not set according to the fieldbus adapter, or the device has not been selected. Check: – The PLC programming. – The settings of parameter groups 50 Fieldbus adapter (FBA) and 54 BA B settings. – The configuration of the fieldbus adapter.
1127	AI supervision. Programmable, see 12.03 AI supervision function.	An analog signal is outside the limits specified for the analog input. Check: – The AUX code (format XYY). X specifies the location of the input. – 0: Control board. – 1: I/O extension module 1. – 2: I/O extension module 2 – 3: I/O extension module 3. – 4: …. YY specifies the input and limit. – 01: AI1 under minimum. – 02: AI1 over maximum. – 03: AI2 under minimum. – 04: AI2 over maximum. – 05: AI3 under minimum. – 06: AI3 over maximum. – The signal level at the analog input. – The wiring connected to the input. – Polarity of the connection. – The minimum and maximum limits of the input in groups 12 Standard AI, 14 I/O extension module 1, 15 I/O extension module 2 and 16 I/O extension module 3.
1129	Service active	reserved
1130	Control panel/PC tool link communication. Programmable, see 49.05 Communication loss action.	This alarm occurs even though no control is expected from the control panel/PC tool. The control panel/PC tool connected via USB, or the PC tool connected via FENA-11/21 has stopped communicating. Check: – The setting of 49.04 Communication loss time.

<table>
<tr><th>Code</th><th>Warning/Notice</th><th>Cause and what to do</th></tr>
<tr><td></td><td></td><td>If needed extend the time out to 2000 ms. Do not forget to verify the setting by means of 49.06 Refresh settings Refresh.
– The setting of 49.05 Communication loss action.
If changed, do not forget to verify the setting by means of 49.06 Refresh settings Refresh.
– The control panel/PC tool connection/cable.
– The control panel connector.
– The mounting platform if being used (e.g., DPMP-01).
– Disconnect and reconnect the control panel/PC tool.</td></tr>
<tr><td>1131</td><td>AI parametrization.</td><td>The current/voltage hardware setting of an analog input does not correspond to the parameter settings.
Check the AUX code. The code identifies the analog input whose settings are in conflict. Adjust either the jumper (J1, J2) setting on the control board or parameters 12.15, 12.25.
Check:
– The AUX code (format 0000000X).
– X specifies the AI.
  – 1 = AI1.
  – 2 = AI2.</td></tr>
<tr><td>1132</td><td>Parameter setting mismatch</td><td>The power controller detected a parameter settings mismatch.
See the AUX code and check the indicated parameters.
Related parameters for leg 1:
<table><tr><th></th><th>Leg 1</th><th>Leg 2</th><th>Leg 3</th></tr><tr><td>Warning word bit</td><td colspan="3">06.62.b00</td></tr><tr><td>Supply Configuration</td><td colspan="3">99.04</td></tr><tr><td>Load Configuration</td><td colspan="3">99.05</td></tr></table></td></tr>
<tr><td>1133</td><td>Internal firmware.</td><td>Internal firmware error.
To reset, cycle the auxiliary power of the unit. If the problem persists, contact your local ABB representative, quoting the AUX code.
Check the AUX code (format YYYY).
YYYY indicates the problem. Actions see below.</td></tr>
<tr><td></td><td>0001</td><td>Default setting of parameters wrong.</td></tr>
<tr><td></td><td>0002</td><td>Parameter flash memory image too small for all parameters.</td></tr>
<tr><td></td><td>0004</td><td>Illegal write attempt on a signal or write-protected parameter.</td></tr>
<tr><td></td><td>0006</td><td>Wrong type code.</td></tr>
<tr><td></td><td>0007</td><td>An un-initialized interrupt has occurred.</td></tr>
<tr><td></td><td>0010</td><td>Wrong parameter value.</td></tr>
<tr><td></td><td>0101 … 9999</td><td>The read only parameter, which is being written to by means of a pointer parameter, e.g., 62.51 Data set 10 data 1 selection, Adaptive Program, or application program, can be identified by means of the last 4 digits.</td></tr>
</table>

Code	Warning/Notice	Cause and what to do
1134	Flash erase speed exceeded	The flash memory in the memory unit has been erased too frequently. This compromises the lifetime of the memory. Avoid forcing unnecessary parameter saves by 96.07 Parameter save manually or cyclic parameter writes. E.g., user logger triggering via parameters. Check the AUX code (format XYYYYZZZ). X specifies the source of warning. – 1: Generic flash memory erase supervision. ZZZ specifies the flash memory subsector number that generated the warning.
1201	External warning 1. (Editable message text) Programmable, see 28.01 External event 1 source and 28.02 External event 1 type.	There is no problem with the unit itself! Warning generated by external device 1. See group 28 Unit Faults. Check: – External device 1. – 28.01 External event 1 source. 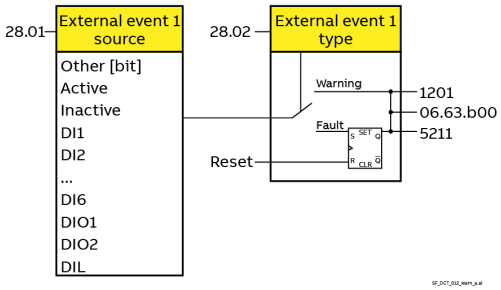
1202	External warning 2. (Editable message text) Programmable, see 28.03 External event 2 source and 28.04 External event 2 type.	There is no problem with the unit itself! Warning generated by external device 2. See group 28 Unit Faults. Check: – External device 2. – 31.03 External event 2 source.
1203	External warning 3. (Editable message text) Programmable, see 28.05 External event 3 source and 28.06 External event 3 type.	There is no problem with the unit itself! Warning generated by external device 3. See group 28 Unit Faults. Check: – External device 3. – 31.05 External event 3 source.
1204	External warning 4. (Editable message text) Programmable, see 28.07 External event 4 source and 28.08 External event 4 type.	There is no problem with the unit itself! Warning generated by external device 4. See group 28 Unit Faults. Check: – External device 4. – 31.07 External event 4 source.
1205	External warning 5. (Editable message text) Programmable, see 28.09 External event 5 source and 28.10 External event 5 type.	There is no problem with the unit itself! Warning generated by external device 5. See group 28 Unit Faults. Check: – External device 5. – 31.09 External event 5 source.
1217	Extension AI parameterization.	The hardware current/voltage and parameter settings do not match for an analog input on an I/O extension module.

Code	Warning/Notice	Cause and what to do
		Check the AUX code (format XX0000YY). XX specifies the number of the I/O extension module. – 01: Group 14 I/O extension module 1. – 02: Group 15 I/O extension module 2. – 03: Group 16 I/O extension module 3. YY specifies the analog input on the module. **Example:** In case of I/O extension module 1 and analog input AI1 the AUX code is 01000001). The hardware current/voltage setting on the module is shown by 14.29 AI1 HW switch position. The corresponding parameter setting is in 14.30 AI1 unit selection. Adjust either the hardware setting on the module or the parameter to solve the mismatch.
1218	I/O extension configuration.	The I/O extension module types and locations specified by parameters do not match the detected configuration or do not communicate with the unit. Check: – The type and location settings of the modules/board. See parameters 14.01, 14.02, 15.01, 15.02, 16.01 and 16.02. – That the module is properly seated in its slot. – That the module and the slot connector is not damaged. – Try installing the module into another slot. – Check the AUX code (format XXYYYYYY). XX specifies the number of the I/O extension module. – 01: Group 14 I/O extension module 1. – 02: Group 15 I/O extension module 2. – 03: Group 16 I/O extension module 3. YYYYYY indicates the problem. Actions see below.
	000001	Communication with module failed.
	000002	Module/Board not found.
	000003	Configuration of module failed.
	000004	
1220	FBA A communication. Programmable, see 50.02 FBA A comm loss func.	Fieldbus adapter A (FBA A): Cyclical communication between PLC and fieldbus adapter module A or between unit and fieldbus adapter module A is lost. Fault 5223 FBA A communication is only activated after the first data set from the overriding control is received by the unit. Before the first data set is received, only warning 1220 FBA A communication is active. The reason is to suppress unnecessary faults (the startup of the overriding control is usually slower than the one of the units). Check: – The status of the fieldbus communication. See user documentation of the fieldbus interface. – The settings of groups 50 Fieldbus adapter (FBA), 51 FBA A settings, 52 FBA A data in and 53 FBA A data out. – The cable connections. – The fieldbus termination. – The fieldbus adapter. – That the master can communicate.
1221	FBA B communication. Programmable, see 50.32 FBA B comm loss func.	Fieldbus adapter B (FBA B): Cyclical communication between PLC and fieldbus adapter module B or between unit and fieldbus adapter module B is lost. Fault 5224 FBA B communication is only activated after the first data set from the overriding control is received by the unit. Before the

Code	Warning/Notice	Cause and what to do
		first data set is received, only warning 1221 FBA B communication is active. The reason is to suppress unnecessary faults (the startup of the overriding control is usually slower than the one of the units). Check: – The status of the fieldbus communication. See user documentation of the fieldbus interface. – The settings of group 50 Fieldbus adapter (FBA), 54 FBA B settings, 55 FBA B data in and 56 FBA B data out. – The cable connections. – The fieldbus termination. – The fieldbus adapter. – That the master can communicate.
1222	DDCS controller communication. Programmable, see 60.59 DDCS controller comm loss function.	Cyclical communication between DDCS controller and unit is lost or there is no communication at all. The unit is waiting for the very first data set. Check: – The status/settings of the DDCS controller. See user documentation of the DDCS controller. – The adapters between DDCS controller and unit. – The settings of group 60 DDCS communication, 61 D2D and DDCS transmit data and 62 D2D and DDCS receive data. – The fiber optic cable connections.
1223	Master-follower link communication. Programmable, see 60.09 M/F comm loss function.	Cyclical communication between master and a follower (DDCS/D2D) is lost or there is no communication at all. The unit is waiting for the very first data set. Check: – The AUX code. It indicates which node address on the master-follower link is affected. See 60.02 M/F node address in each unit. – The setting of 60.14 M/F follower selection. – The setting of 20.01 Command location. – The settings of group 60 DDCS communication. – The cable connections.
1224	EFB communication. Programmable, see 58.14 Communication loss action.	Cyclical communication to the embedded fieldbus (EFB) is lost. Fault 5225 EFB communication is only activated after the first data set from the overriding control is received by the unit. Before the first data set is received, only warning 1224 EFB communication is active. The reason is to suppress unnecessary faults (the startup of the overriding control is usually slower than the one of the units). Check: – The status of the fieldbus master (online, offline, error, etc.). – The settings of group 58 FBA Embedded fieldbus. – The cable connections to connector XD2D on the control board. – The fieldbus termination.
1225	Process PID 1 sleep mode.	The process PID 1 is entering sleep mode. Informative warning.
1226	Process PID 2 sleep mode.	The process PID 2 is entering sleep mode. Informative warning.
1227	Process PID 3 sleep mode.	The process PID 3 is entering sleep mode. Informative warning.
1229	DDCS communication.	DDCS (fiber optic) communication between thyristor power controllers is lost. – Check the status of the thyristor power controllers. – Check settings in group 60 DDCS communication.

Code	Warning/Notice	Cause and what to do
		– Check fiber optic cable connections. If necessary, replace fiber optic cables.
1230	Follower. Programmable, see 60.17 Follower fault action.	A follower has tripped. Check the AUX code to find out the node address of the faulted follower. See 60.02 M/F node address. Correct the fault in the follower.
A113	Power unit, communication. See also fault 5681.	Communication errors between the control unit and a power unit. Check: – The setting of 95.15. Control unit configuration. – The connections between the control unit and the power unit: 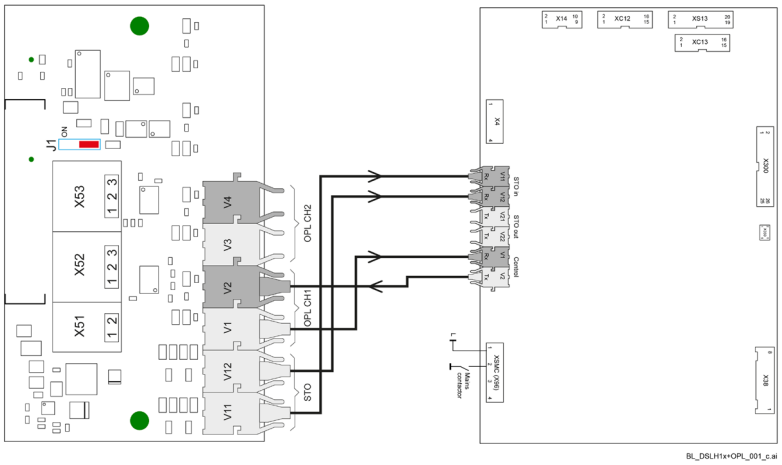 – The auxiliary power of the SDCS-OPL-H01. – The auxiliary code (format XXXYYYZZ). XXX specifies the transmitter FIFO error code. – 000: No transmitter FIFO error. – 001: Internal error [invalid call parameter]. – 002: Internal error [configuration not supported]. – 003: Transmission buffer full. YYY identifies the power unit. – 000: Broadcast. – 001: Power unit connected to channel1 on SDCS-DSL-H1x. ZZ specifies the error source. – 01: Transmitter side [link error] from power unit to control unit. – 02: Transmitter side [no communication] from power unit to control unit. – 03: Receiver side [link error] from control unit to power unit. – 04: Receiver side [no communication] from control unit to power unit. – 05: Transmitter FIFO error, see XXX. – 06: SDCS-OPL-H01 not found.

Code	Warning/Notice	Cause and what to do
A799	Ext I/O comm loss. Programmable, see 28.14 Ext I/O comm loss event. See also fault 5508.	The I/O extension module types and locations specified by parameters do not match the detected configuration or do not communicate with the unit. Check: – The type and location settings of the modules. See parameters 14.01, 14.02, 15.01, 15.02 and 16.01, 16.02. – That the module/board is properly seated in its slot. – That the module/board and the slot connector is not damaged. – Try installing the module into another slot. – Check the AUX code (format XXYYYYYY). XX specifies the number of the I/O extension module. – 01: Group 14 I/O extension module 1. – 02: Group 15 I/O extension module 2. – 03: Group 16 I/O extension module 3. YYYYYY indicates the problem. Actions see below.
	000001	Communication with module failed.
	000002	Module not found.
	000003	Configuration of module failed.
	000004	
B680	SW internal diagnostics	A timeout in the firmware was triggered. Contact your local ABB representative quoting the AUX code. Also make and send a ‘support package’ taken with Drive Composer pro: 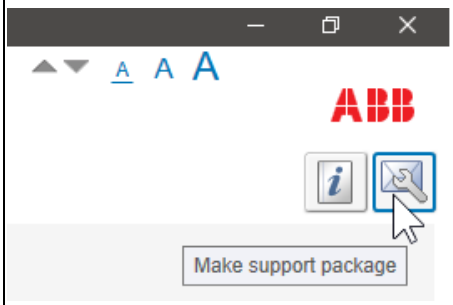

User warnings

Code	Warning/Notice	Cause and what to do
1301	AP Warning 1.	Reserved
1302	AP Warning 2.	Reserved
1303	AP Warning 3.	Reserved
1304	AP Warning 4.	Reserved
1305	AP Warning 5.	Reserved

Leg 1 warnings

Code	Warning/Notice	Cause and what to do
2101	Leg 1 Overcurrent.	
	Related codes:	2101, 2201, 2301, 3101, 3201, 3301.
	Problem:	The power controller detected an abnormal high RMS current.
	Description (for leg 1):	Related parameters see below.

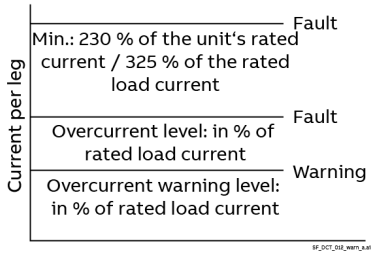

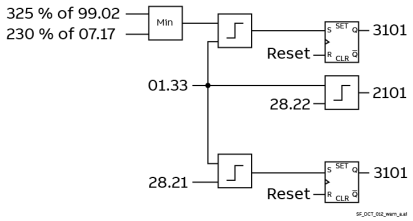

	Leg 1	Leg 2	Leg 3
Unit output current scaling set	07.17		
Unit output overcurrent level	07.18		
Load Current	99.02		
Overcurrent Fault level	28.21	28.23	28.25
Overcurrent Warning level	28.22	28.24	28.26
Fault Word	06.66.b00	06.67.b00	06.68.b00
Warning word	06.71.b00	06.72.b00	06.73.b00
Current RMS relative actual	01.33	01.34	01.35
Fault Function Leg 2/Leg 3	-	28.20	

	Probable causes:	What to check and suggested measures.
	Wrong parameter setting:	Check parameters as listed above.
	A ground fault has occurred at the output:	Disconnect the wiring from the output terminals (U2/V2/W2) and perform a high voltage (megger) test. Remove the grounded parts (including replacement of the wires, relay terminals and load elements).
	Cold resistance is too low:	In phase angle control (see 99.10, 99.25, 99.40 Leg x Control Mode): – Increase the phase angle soft start ramp (see 99.16, 99.31, 99.46 Leg x Phase Angle Soft Start Ramp). In full wave fix cycle control (see 99.10, 99.25, 99.40 Leg x Control Mode): – Use Start mode: Soft Start (see 99.12, 99.27, 99.32 Leg x Start Mode) and set up the soft start ramp.
	The load resistance is too low for the reached output voltage resulting in too high current:	Set up the current limiter in Groups 30/31/32.
2102	Leg 1 Mains Overvoltage	
	Related codes:	2102, 2202, 2302, 3102, 3202, 3302.
	Problem:	The power controller detected an abnormal high input voltage.
	Description (for leg 1):	Related parameters see below.

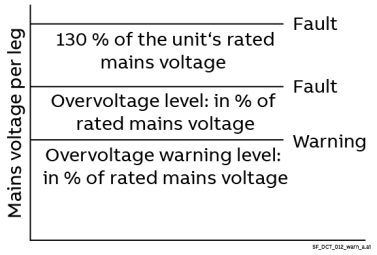

	Leg 1	Leg 2	Leg 3
Unit input voltage scaling set	07.19		
Supply Voltage	99.01		
Mains Overvoltage Fault level	28.30	28.32	28.34
Mains Overvoltage Warring level	28.31	28.33	28.35
Fault Word	06.66.b01	06.67.b01	06.68.b01
Warning word	06.71.b01	06.72.b01	06.73.b01
Mains Voltage relative	01.26	01.27	01.28

Code	Warning/Notice	Cause and what to do

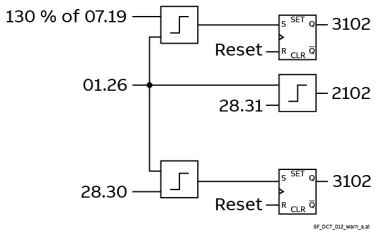

Fault Function Leg 2/Leg 3	-	28.20

	Probable causes:	What to check and suggested measures.
	Wrong parameter setting:	Check parameters as listed above.
	Mains voltage too high:	Measure the mains voltage.
	Mains voltage out of specification:	Check the nameplate of the DCT880.
	Measurement fuse broken:	Check fuses (F100 … F102) on the SDCS-PIN-H11.
2103	Leg 1 Thyristor Short Circuit.	
	Related codes:	2103, 2203, 2303, 3103, 3203, 3303.
	Problem:	The power controller detected a short-circuited thyristor.
	Description (for leg 1):	Related parameters see below.

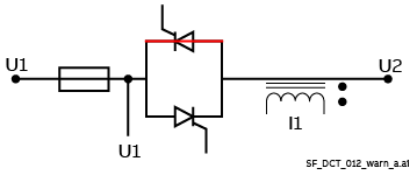

	Leg 1	Leg 2	Leg 3
Thyristor short function	28.55		
Thyristor short trip level	28.56		
Fault Word	06.66.b02	06.67.b02	06.68.b02
Warning word	06.71.b02	06.72.b02	06.73.b02
AVR Current forward Thyristor relative	01.71	01.73	01.75
AVR Current reverse Thyristor relative	01.72	01.74	01.76

	Probable causes:	What to check and suggested measures.
	Wrong parameter setting:	Check parameters as listed above. Default setting of 5 .00 % might be too low.
	Thyristor broken:	Exchange Thyristor.
2104	Leg 1 Thyristor Open Circuit	
	Related codes:	2104, 2204, 2304, 3104, 3204, 3304.
	Problem:	The power controller detected an open thyristor.
	Description (for leg 1):	Related parameters see below.

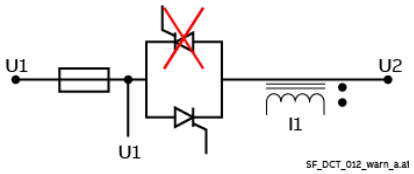

	Leg 1	Leg 2	Leg 3
Fault Word	06.66.b03	06.67.b03	06.68.b03
Warning word	06.71.b03	06.72.b03	06.73.b03
AVR Current forward Thyristor relative	01.71	01.73	01.75
AVR Current reverse Thyristor relative	01.72	01.74	01.76

	Probable causes:	What to check and suggested measures.
	Thyristor broken:	Exchange Thyristor.
2105	Leg 1 Mains Undervoltage	
	Related codes:	2105, 2205, 2305, 3105, 3205, 3305.

Code	Warning/Notice	Cause and what to do
	AUX code (format XXXX):	Fault 3105 and AUX code 0001: – 28.40 Leg 1 Mains Undervoltage short time Fault level is undershot. Fault 3105 and AUX code 0002: – 28.41 Leg 1 Mains Undervoltage Fault level is undershot. Fault 3205 and AUX code 0001: – 28.44 Leg 2 Mains Undervoltage short time Fault level is undershot. Fault 3205 and AUX code 0002: – 28.45 Leg 2 Mains Undervoltage Fault level is undershot. Fault 3305 and AUX code 0001: – 28.48 Leg 3 Mains Undervoltage short time Fault level is undershot. Fault 3305 and AUX code 0002: – 28.49 Leg 3 Mains Undervoltage Fault level is undershot.
	Event active:	After Enable command 2 s delay, after Run command not delayed, see 06.08 Used Main Control Word.
	Problem:	The power controller detected an abnormal low input voltage.
	Description (for leg 1):	Related parameters see below.

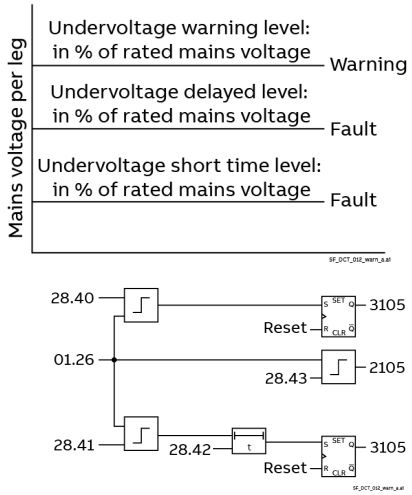

	Leg 1	Leg 2	Leg 3
Supply Voltage	99.01		
Mains Undervoltage short time Fault level	28.40	28.44	28.48
Enable Local I/O	19.01	19.03	19.05
Mains Undervoltage Fault level	28.41	28.45	28.49
Undervoltage Fault delay time	28.42	28.46	28.50
Undervoltage Warning level	28.43	28.47	28.51
Fault Word	06.66.b04	06.67.b04	06.68.b04
Warning word	06.71.b04	06.72.b04	06.73.b04
Mains Voltage relative	01.26	01.27	01.28
Fault Function Leg 2/Leg 3	-	28.20	

	Probable causes:	What to check and suggested measures.
	Mains contactor is controlled by the overriding control:	Suppress the short time mains undervoltage fault by means of 19.01 Leg 1 Enable Local I/O = 19.03 Leg 2 Enable Local I/O = 19.05 Leg 3 Enable Local I/O = Mains ON.
	Wrong parameter setting:	Check parameters as listed above.
	Mains voltage too low:	Measure the mains voltage.
	Possible power dip:	Check factory recordings/information.
	Mains voltage out of specification:	Check the nameplate of the DCT880.
	External/Internal fuse broken:	Check and exchange external/internal fuses.
2106	Leg 1 Internal Semiconductor Fuse Open Circuit	reserved

Code	Warning/Notice	Cause and what to do
2151	Leg 1 Load Loss. Programmable, see 36.10 Leg 1 Load Loss Function.	
	Related codes:	2151, 2251, 2351, 3151, 3251, 3351.
	Event active:	At Run command, see 06.08 Used Main Control Word.
	Problem:	The power controller detected a total load loss.
	Description (for leg 1):	Related parameters see below.

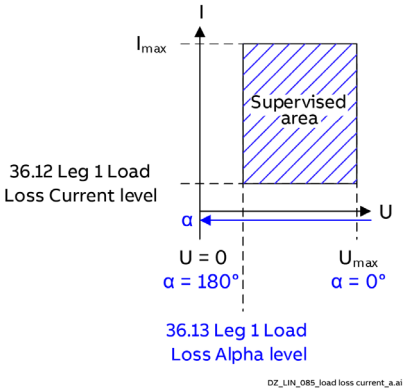

	Leg 1	Leg 2	Leg 3
Load Loss Function	36.10	37.10	38.10
Load Loss activation time	36.11	37.11	38.11
Load Loss Current level	36.12	37.12	38.12
Load Loss Alpha level	36.13	37.13	38.13
Load Fault Word	06.76.b00	06.77.b00	06.78.b00
Load Warning Word	06.81.b00	06.82.b00	06.83.b00
Current RMS actual	01.30	01.31	01.32
Power actual	01.50	01.51	01.52
Resistance actual	36.01	37.01	38.01
3ph Resistance actual	36.02	37.02	38.02

	Probable causes:	What to check and suggested measures.
	Wrong parameter setting:	Check parameters as listed above.
	Load:	Check the loads and their connections.
2152	Leg 1 Partial Load Loss. Programmable, see 36.20 Leg 1 Partial Load Loss Function.	
	Related codes:	2152, 2252, 2352, 3152, 3252, 3352.
	Event active:	At Run command, see 06.08 Used Main Control Word.
	Problem:	The power controller detected a partial load loss. A static change in resistance of the load is detected.
	Description (for leg 1):	Related parameters see below.
	All elements must be connected in parallel and must have same characteristics and identical impedance.	

	Leg 1	Leg 2	Leg 3
Parallel Elements	36.15	37.15	38.15
Partial Load Loss Function	36.20	37.20	38.20
Partial Load Loss activation time	36.21	37.21	38.21
Partial Load Loss level	36.22	37.22	38.22
Partial Load Loss delay time	36.23	37.23	38.23
Load Fault Word	06.76.b01	06.77.b01	06.78.b01
Load Warning Word	06.81.b01	06.82.b01	06.83.b01
Current RMS actual	01.30	01.31	01.32
Power actual	01.50	01.51	01.52
Resistance actual	36.01	37.01	38.01
3ph Resistance actual	36.02	37.02	38.02
Initial resistance	36.41	37.41	37.41

	Probable causes:	What to check and suggested measures.
	Wrong parameter setting:	Check parameters as listed above.
	Load:	Check the loads and their connections.

<table>
<tr><th>Code</th><th>Warning/Notice</th><th>Cause and what to do</th></tr>
<tr><td rowspan="8">2153</td><td>Leg 1 Partial Load Short Circuit.

Programmable, see 36.25 Leg 1 Partial Load Short Function.</td><td></td></tr>
<tr><td>Related codes:</td><td>2153, 2253, 2353, 3153, 3253, 3353.</td></tr>
<tr><td>Event active:</td><td>At Run command, see 06.08 Used Main Control Word.</td></tr>
<tr><td>Problem:</td><td>The power controller detected a partial load short circuit. A static change in resistance of the load is detected.</td></tr>
<tr><td>Description (for leg 1):</td><td>Related parameters see below.</td></tr>
<tr><td>All elements must be connected in series and must have same characteristics and identical impedance values.</td><td>
<table>
<tr><th></th><th>Leg 1</th><th>Leg 2</th><th>Leg 3</th></tr>
<tr><td>Serial Elements</td><td>36.16</td><td>37.16</td><td>38.16</td></tr>
<tr><td>Partial Load Short Function</td><td>36.25</td><td>37.25</td><td>38.25</td></tr>
<tr><td>Partial Load Short activation time</td><td>36.26</td><td>37.26</td><td>38.26</td></tr>
<tr><td>Partial Load Short level</td><td>36.27</td><td>37.27</td><td>38.27</td></tr>
<tr><td>Partial Load Short delay time</td><td>36.28</td><td>37.28</td><td>38.28</td></tr>
<tr><td>Load Fault Word</td><td>06.76.b02</td><td>06.77.b02</td><td>06.78.b02</td></tr>
<tr><td>Load Warning Word</td><td>06.81.b02</td><td>06.82.b02</td><td>06.83.b02</td></tr>
<tr><td>Current RMS actual</td><td>01.30</td><td>01.31</td><td>01.32</td></tr>
<tr><td>Power actual</td><td>01.50</td><td>01.51</td><td>01.52</td></tr>
<tr><td>Resistance actual</td><td>36.01</td><td>37.01</td><td>38.01</td></tr>
<tr><td>3ph Resistance actual</td><td>36.02</td><td>37.02</td><td>38.02</td></tr>
<tr><td>Initial resistance</td><td>36.41</td><td>37.41</td><td>37.41</td></tr>
</table>
</td></tr>
<tr><td>Probable causes:</td><td>What to check and suggested measures.</td></tr>
<tr><td>Wrong parameter setting:</td><td>Check parameters as listed above.</td></tr>
<tr><td>Load:</td><td>Check the loads and their connections.</td></tr>
<tr><td rowspan="8">2154</td><td>Leg 1 Unit Thermal Overload.

Programmable, see 36.35 Leg 1 Unit Overload Function.</td><td></td></tr>
<tr><td>Related codes:</td><td>2154, 2254, 2354, 3154, 3254, 3354.</td></tr>
<tr><td>Event active:</td><td>At Run command, see 06.08 Used Main Control Word.</td></tr>
<tr><td>Problem:</td><td>The power controller detected a thermal overload in the unit. The load current is constantly over the unit’s rated current.</td></tr>
<tr><td>Description (for leg 1):</td><td>Related parameters see below.</td></tr>
<tr><td>-</td><td>
<table>
<tr><th></th><th>Leg 1</th><th>Leg 2</th><th>Leg 3</th></tr>
<tr><td>Unit output current scaling set</td><td colspan="3">07.17</td></tr>
<tr><td>Unit Overload Function</td><td>36.35</td><td>37.35</td><td>38.35</td></tr>
<tr><td>Unit Overload level</td><td>36.36</td><td>37.36</td><td>38.36</td></tr>
<tr><td>Unit Overload time</td><td>36.37</td><td>37.37</td><td>38.37</td></tr>
<tr><td>Current RMS actual</td><td>01.30</td><td>01.31</td><td>01.32</td></tr>
</table>
</td></tr>
<tr><td>Probable causes:</td><td>What to check and suggested measures.</td></tr>
<tr><td>Wrong parameter setting:</td><td>Check parameters as listed above.</td></tr>
<tr><td>Unit out of specification:</td><td>Check the nameplate of the DCT880.</td></tr>
</table>

Code	Warning/Notice	Cause and what to do
	The load resistance is too low for the reached output voltage, resulting in too high current.	Set up the current limiter in Groups 30/31/32.
2155	Leg 1 Load Overload. Programmable, see 36.30 Leg 1 Load Overload Function.	
	Related codes:	2155, 2255, 2355, 3155, 3255, 3355.
	Event active:	At Run command, see 06.08 Used Main Control Word.
	Problem:	The power controller detected a load overload (I^2t integral).
	Description (for leg 1):	Related parameters see below.
	-	

	Leg 1	Leg 2	Leg 3
Load Overload Function	36.30	37.30	38.30
Load Overload level	36.31	37.31	38.31
Load Overload time	36.32	37.32	38.32
Load Fault Word	06.76.b03	06.77.b03	06.78.b03
Load Warning Word	06.81.b03	06.82.b03	06.83.b03
Current RMS relative actual	01.33	01.34	01.35

	Plausible causes:	What to check and suggested measures.
	Wrong parameter setting:	Check parameters as listed above.
	Load:	Check the loads and their connections. Check the setting of 99.02 Load Current.
2157	Leg 1 Load Aging. Programmable, see 36.40 Leg 1 Resistance change function.	
	Related codes:	2157, 2257, 2357, 3157, 3257, 3357.
	Event active:	At Run command, see 06.08 Used Main Control Word.
	Problem:	The power controller detected a static change in the load resistance.
	Description (for leg 1):	Related parameters see below.

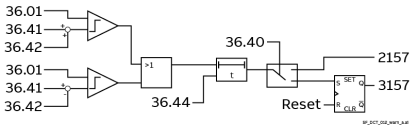

	Leg 1	Leg 2	Leg 3
Resistance change function	36.40	37.40	38.40
Initial Resistance	36.41	37.41	38.41
Resistance change level	36.42	37.42	38.42
Resistance Change activation time	36.44	37.44	38.44
Load Fault Word	06.76.b04	06.77.b04	06.78.b04
Load Warning Word	06.81.b04	06.82.b04	06.83.b04
Resistance actual	36.01	37.01	38.01
3ph Resistance actual	36.02	37.02	38.02

	Probable causes:	What to check and suggested measures.
	Wrong parameter setting:	Check parameters as listed above.
	Load:	Check the loads and their connections.
2158	Leg 1 Load Current Imbalance.	

Code	Warning/Notice	Cause and what to do
	Programmable, see 36.50 Leg 1 Load Current Imbalance Function	
	Related codes:	2158, 2258, 2358, 3158, 3258, 3358.
	Event active:	At Run command, see 06.08 Used Main Control Word.
	Problem:	The power controller detected a load current imbalance in a symmetrical 3-phase load configuration. The highest and lowest load current are compared, and they are out of range.
	-	

	Leg 1	Leg 2	Leg 3
Load Current Imbalance Function	36.50	-	-
Load Current Imbalance activation time	36.51	-	-
Load Current Imbalance level	36.52	-	-
Load Current Imbalance delay time	36.53	-	-
Load Fault Word	06.76.b05	06.77.b05	06.78.b05
Load Warning Word	06.81.b05	06.82.b05	06.83.b05
Current RMS relative actual	01.33	01.34	01.35

	Probable causes:	What to check and suggested measures.
	Wrong parameter setting:	Check parameters as listed above.
	Load:	Check the loads and their connections.

Leg 2 warnings

Code	Warning/Notice	Cause and what to do
2201	Leg 2 Overcurrent.	See warning 2101.
2202	Leg 2 Mains Overvoltage.	See warning 2102.
2203	Leg 2 Thyristor Short Circuit.	See warning 2103.
2204	Leg 2 Thyristor Open Circuit.	See warning 2104.
2205	Leg 2 Mains Undervoltage.	See warning 2105.
2206	Leg 2 Internal Semiconductor Fuse Open Circuit.	See warning 2106.
2251	Leg 2 Load Loss Programmable, see 37.10 Leg 2 Load Loss Function.	See warning 2151.
2252	Leg 2 Partial Load Loss. Programmable, see 37.20 Leg 2 Partial Load Loss Function.	See warning 2152.
2253	Leg 2 Partial Load Short Circuit. Programmable, see 37.25 Leg 2 Partial Load Short Function.	See warning 2153.
2254	Leg 2 Unit Thermal Overload. Programmable, see 37.35 Leg 2 Unit Overload Function.	See warning 2154.
2255	Leg 2 Load Overload. Programmable, see 37.30 Leg 2 Load Overload Function.	See warning 2155.
2257	Leg 2 Load Aging. Programmable, see 37.40 Leg 2 Resistance change function.	See warning 2157.
2258	Leg 2 Load Current Imbalance.	See warning 2158.

Code	Warning/Notice	Cause and what to do
	Programmable, see 36.50 Leg 1 Load Current Imbalance Function.	

Leg 3 warnings

Code	Warning/Notice	Cause and what to do
2301	Leg 3 Overcurrent.	See warning 2101.
2302	Leg 3 Mains Overvoltage.	See warning 2102.
2303	Leg 3 Thyristor Short Circuit.	See warning 2103.
2304	Leg 3 Thyristor Open Circuit.	See warning 2104.
2305	Leg 3 Mains Undervoltage.	See warning 2105.
2306	Leg 3 Internal Semiconductor Fuse Open Circuit.	See warning 2106.
2351	Leg 3 Load Loss Programmable, see 38.10 Leg 3 Load Loss Function.	See warning 2151.
2352	Leg 3 Partial Load Loss. Programmable, see 38.20 Leg 3 Partial Load Loss Function.	See warning 2152.
2353	Leg 3 Partial Load Short Circuit. Programmable, see 38.25 Leg 3 Partial Load Short Function.	See warning 2153.
2354	Leg 3 Unit Thermal Overload. Programmable, see 38.35 Leg 3 Unit Overload Function.	See warning 2154.
2355	Leg 3 Load Overload. Programmable, see 38.30 Leg 3 Load Overload Function.	See warning 2155.
2357	Leg 3 Load Aging. Programmable, see 38.40 Leg 3 Resistance change function.	See warning 2157.
2358	Leg 3 Load Current Imbalance. Programmable, see 36.50 Leg 1 Load Current Imbalance Function.	See warning 2158.

Global warnings

Code	Warning/Notice	Cause and what to do
2804	Power Part Overtemperature	Excessive power part temperature. Wait until the power part is cooled down. Shutdown temperature, see 07.20 Unit max power part temp set. The power part overtemperature warning will already appear at approximately 5°C below the shutdown temperature. Check: – The value of 05.50 Power part temperature. – The ambient conditions (e.g., ambient temperature). – The airflow and fan operation. – The unit fan supply voltage. – The unit fan direction of rotation. – The unit fan components. – The heatsink fins for dust pick-up. – The unit cooling air inlet (e.g., filters). – The unit cooling air outlet. – For open unit doors. – Inadmissible load cycle.

Code	Warning/Notice	Cause and what to do
		– When 95.16 Set: Unit type code = W00-0000-00, that 95.20 Set: Unit max power part temp is set properly.
2850	PowerOpt comm timeout	See DCT880 Power Optimizer Control Manual (3ADW000441).
2851	PowerOpt Ping	
2852	PowerOpt Missing	
2853	PowerOpt sync loss	
8130	Service started	Is shown when a service is requested. E.g., 99.07 Service Mode = Thyristor test.
8131	Service success	Is shown when a requested service is successfully finished. E.g., 99.07 Service Mode = Thyristor test.
8132	Service failed	Is shown when a requested service failed. E.g., 99.07 Service Mode = Thyristor test.
8140	Leg 1 Thyristor Short Circuit	Thyristor test detected at least one short-circuited thyristor in leg 1, see 99.07 Service Mode = Thyristor test.
8141	Leg 2 Thyristor Short Circuit	Thyristor test detected at least one short-circuited thyristor in leg 2, see 99.07 Service Mode = Thyristor test.
8142	Leg 3 Thyristor Short Circuit	Thyristor test detected at least one short-circuited thyristor in leg 3, see 99.07 Service Mode = Thyristor test.
8143	Leg 1 Thyristor Open Circuit	Thyristor test detected at least one open thyristor in leg 1, see 99.07 Service Mode = Thyristor test.
8144	Leg 2 Thyristor Open Circuit	Thyristor test detected at least one open thyristor in leg 2, see 99.07 Service Mode = Thyristor test.
8145	Leg 3 Thyristor Open Circuit	Thyristor test detected at least one open thyristor in leg 3, see 99.07 Service Mode = Thyristor test.
8146	Leg 1 Internal Semiconductor Fuse Open Circuit	Thyristor test detected at least one open semiconductor fuse in leg 1, see 99.07 Service Mode = Thyristor test.
8147	Leg 2 Internal Semiconductor Fuse Open Circuit	Thyristor test detected at least one open semiconductor fuse in leg 2, see 99.07 Service Mode = Thyristor test.
8148	Leg 3 Internal Semiconductor Fuse Open Circuit	Thyristor test detected at least one open semiconductor fuse in leg 3, see 99.07 Service Mode = Thyristor test.

User events

Code	Warning/Notice	Cause and what to do
8301	AP Pure Event 1.	Reserved
8302	AP Pure Event 2.	Reserved
8303	AP Pure Event 3.	Reserved
8304	AP Pure Event 4.	Reserved
8305	AP Pure Event 5.	Reserved

Faults and AUX codes

Leg 1 faults

Code	Fault/Notice	Cause and what to do
3101	Leg 1 Overcurrent.	See warning 2101.
3102	Leg 1 Mains Overvoltage.	See warning 2102.
3103	Leg 1 Thyristor Short Circuit.	See warning 2103.
3104	Leg 1 Thyristor Open Circuit.	See warning 2104.
3105	Leg 1 Mains Undervoltage.	See warning 2105.
3106	Leg 1 Internal Semiconductor Fuse Open Circuit.	See warning 2106.
3151	Leg 1 Load Loss Programmable, see 36.10 Leg 1 Load Loss Function.	See warning 2151.
3152	Leg 1 Partial Load Loss. Programmable, see 36.20 Leg 1 Partial Load Loss Function.	See warning 2152.
3153	Leg 1 Partial Load Short Circuit. Programmable, see 36.25 Leg 1 Partial Load Short Function.	See warning 2153.
3154	Leg 1 Unit Thermal Overload. Programmable, see 36.35 Leg 1 Unit Overload Function.	See warning 2154.
3155	Leg 1 Load Overload. Programmable, see 36.30 Leg 1 Load Overload Function.	See warning 2155.
3157	Leg 1 Load Aging. Programmable, see 36.40 Leg 1 Resistance change function.	See warning 2157.
3158	Leg 1 Load Current Imbalance. Programmable, see 36.50 Leg 1 Load Current Imbalance Function.	See warning 2158.

Leg 2 faults

Code	Fault/Notice	Cause and what to do
3201	Leg 2 Overcurrent.	See warning 2101.
3202	Leg 2 Mains Overvoltage.	See warning 2102.
3203	Leg 2 Thyristor Short Circuit.	See warning 2103.
3204	Leg 2 Thyristor Open Circuit.	See warning 2104.
3205	Leg 2 Mains Undervoltage.	See warning 2105.
3206	Leg 2 Internal Semiconductor Fuse Open Circuit.	See warning 2106.
3251	Leg 2 Load Loss Programmable, see 37.10 Leg 2 Load Loss Function.	See warning 2151.
3252	Leg 2 Partial Load Loss. Programmable, see 37.20 Leg 2 Partial Load Loss Function.	See warning 2152.
3253	Leg 2 Partial Load Short Circuit. Programmable, see 37.25 Leg 2 Partial Load Short Function.	See warning 2153.
3254	Leg 2 Unit Thermal Overload. Programmable, see 37.35 Leg 2 Unit Overload Function.	See warning 2154.
3255	Leg 2 Load Overload.	See warning 2155.

Code	Fault/Notice	Cause and what to do
	Programmable, see 37.30 Leg 2 Load Overload Function.	
3257	Leg 2 Load Aging. Programmable, see 37.40 Leg 2 Resistance change function.	See warning 2157.
3258	Leg 2 Load Current Imbalance. Programmable, see 36.50 Leg 1 Load Current Imbalance Function.	See warning 2158.

Leg 3 faults

Code	Fault/Notice	Cause and what to do
3301	Leg 3 Overcurrent.	See warning 2101.
3302	Leg 3 Mains Overvoltage.	See warning 2102.
3303	Leg 3 Thyristor Short Circuit.	See warning 2103.
3304	Leg 3 Thyristor Open Circuit.	See warning 2104.
3305	Leg 3 Mains Undervoltage.	See warning 2105.
3306	Leg 3 Internal Semiconductor Fuse Open Circuit.	See warning 2106.
3351	Leg 3 Load Loss Programmable, see 38.10 Leg 2 Load Loss Function.	See warning 2151.
3352	Leg 3 Partial Load Loss. Programmable, see 38.20 Leg 2 Partial Load Loss Function.	See warning 2152.
3353	Leg 3 Partial Load Short Circuit. Programmable, see 38.25 Leg 2 Partial Load Short Function.	See warning 2153.
3354	Leg 3 Unit Thermal Overload. Programmable, see 38.35 Leg 2 Unit Overload Function.	See warning 2154.
3355	Leg 3 Load Overload. Programmable, see 38.30 Leg 2 Load Overload Function.	See warning 2155.
3357	Leg 3 Load Aging. Programmable, see 38.40 Leg 2 Resistance change function.	See warning 2157.
3358	Leg 3 Load Current Imbalance. Programmable, see 36.50 Leg 1 Load Current Imbalance Function.	See warning 2158.

General faults

Code	Fault/Notice	Cause and what to do
3804	Power Part Overtemperature	Excessive power part temperature. Wait until the power part is cooled down. Shutdown temperature, see 07.20 Unit max power part temp set. The power part overtemperature warning will already appear at approximately 5°C below the shutdown temperature. Check: – The value of 05.50 Power part temperature. – The ambient conditions (e.g., ambient temperature). – The airflow and fan operation. – The unit fan supply voltage. – The unit fan direction of rotation.

Code	Fault/Notice	Cause and what to do
		– The unit fan components. – The heatsink fins for dust pick-up. – The unit cooling air inlet (e.g., filters). – The unit cooling air outlet. – For open unit doors. – Inadmissible load cycle. – When 95.16 Set: Unit type code = W00-0000-00, that 95.20 Set: Unit max power part temp is set properly.
3808	Controller fan acknowledge	Unit cooling fan feedback at the DI is missing. Check: – The settings of 19.38 Controller fan acknowledge source and 19.39 Controller fan delay time. – The unit fan operation and connection. – The unit fan contactor. – The unit fan circuit. – The unit fan klixon. – The unit fan components. – The unit fan supply voltage. – The unit fan direction of rotation. – The unit door open. – The unit cooling air inlet (e.g., filter). – The unit cooling air outlet. – T6 and T8 pressure switch (setting should be 2 mbar). – The used digital inputs and outputs (groups 10 and 11).

3811	Mains Synchronization lost	The synchronization with the mains has been lost.
		Check:
		– That the supply configuration fits to the setting of 99.04 Supply Configuration.
		– That 99.01 Supply Voltage has the proper value after an On command has been given.
		– The mains frequency (50 Hz ±5 Hz; 60 Hz ±5 Hz) and stability (df/dt = 17 %/s) see 95.30 PLL input deviation and 95.31 PLL output, internal mains frequency.
		– The condition of the mains (voltage, cabling, busbars, fuses, switchgear).
		– For mains supply imbalance.
		– For loose mains cable/busbar connections.
		– That the mains contactor closes and opens.
		– The mains contactor contacts for proper condition.
		– For a ground fault.
		– The AUX code:
		  – 1: No synchronization signal.
		  – 2: Phase sequence lost.
		  – 3: Deviation level of PLL exceeded. See 95.35 PLL deviation level.

3850	PowerOpt comm timeout	See DCT880 Power Optimizer Control Manual (3ADW000441).
3853	PowerOpt sync loss	
5091	STO active. Programmable, see 28.72 STO indication run/stop.	Safe torque off active, no unit problem. Check: – 31.22 STO indication run/stop. – The safe torque off circuit. **WARNING** The XSTO terminals must not be used for thyristor power controllers.

Code	Fault/Notice	Cause and what to do
		They are not offering any certified safety functionality.
5094	Measurement circuit bridge temperature.	Problems with the internal temperature measurement of the bridge. Check: – The wiring of the temperature sensor. This includes the fiber optic connection between control unit and power unit (e.g., plugs are swapped), if applicable. – The temperature sensor. – The AUX code (format XXXYYYZZ). For the DCT880 YYY is always 001.
5201	Temperature 1 fault	See 35.13 Temp 1 fault function and 35.14 Temp 1 fault level.
5202	Temperature 2 fault	See 35.23 Temp 2 fault function and 35.24 Temp 2 fault level.
5203	Temperature 3 fault	See 35.33 Temp 3 fault function and 35.34 Temp 3 fault level.
5204	Temperature 4 fault	See 35.43 Temp 4 fault function and 35.44 Temp 4 fault level.
5211	External fault 1. (Editable message text) Programmable, see 28.01 External event 1 source and 28.02 External event 1 type.	There is no problem with the unit itself! Fault generated by external device 1. See group 28 Unit Faults. Check: – External device 1. – 28.01 External event 1 source. 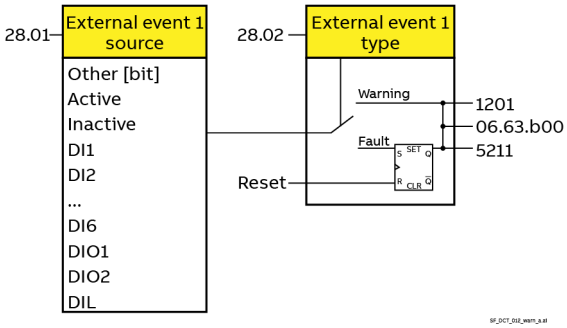
5212	External fault 2. (Editable message text) Programmable, see 28.03 External event 2 source and 28.04 External event 2 type.	There is no problem with the unit itself! Fault generated by external device 2. See group 28 Unit Faults. Check: – External device 2. – 31.03 External event 2 source.
5213	External fault 3. (Editable message text) Programmable, see 28.05 External event 3 source and 28.06 External event 3 type.	There is no problem with the unit itself! Fault generated by external device 3. See group 28 Unit Faults. Check: – External device 3. – 31.05 External event 3 source.
5214	External fault 4. (Editable message text) Programmable, see 28.07 External event 4 source and 28.08 External event 4 type.	There is no problem with the unit itself! Fault generated by external device 4. See group 28 Unit Faults. Check: – External device 4. – 31.07 External event 4 source.
5215	External fault 5. (Editable message text)	There is no problem with the unit itself! Fault generated by external device 5. See group 28 Unit Faults. Check: – External device 5.

Code	Fault/Notice	Cause and what to do
	Programmable, see 28.09 External event 5 source and 28.10 External event 5 type.	– 31.09 External event 5 source.

5221	Rating ID mismatch.	The hardware of the thyristor power controller/SDCS-CON-H01 does not match the information stored in the memory unit. This may occur e.g., after a firmware update, memory unit replacement or replacement of the SDCS-CON-H01.
		To reset, cycle the auxiliary power of the unit.
		Check:
		– The settings of 95.14 Set: Power unit (if shown and available), 95.16 Set: Unit type code, 95.17 Set: Unit legs, 95.18 Set: Unit output current scaling and 95.19 Set: Unit input voltage scaling.
		– The AUX code (format ZZ).
		ZZ indicates the AUX code category.
		  – 06 = Power unit rating ID invalid.
		  – 07 = Reading power unit rating ID or power unit type failed on power unit connection.
		  – 08 = Power unit not supported (illegal rating ID).
		  – 09: = Power unit type mismatch. See 95.14 Set: Power unit = **Unsupported power unit type**.
		  – 10 = Type code out of range. For module sizes H1 … H5 the current and voltage range of the type code setting is limited to max 1190 ADC and max 600 V_{AC}.
		  – 20 = Saving of 95.25 Set: Type code failed.
		  – 21 = Saving of 95.14 Set: Power unit failed.

5223	FBA A communication. Programmable, see 50.02 FBA A comm loss func.	Fieldbus adapter A (FBA A): Cyclical communication between PLC and fieldbus adapter module A or between unit and fieldbus adapter module A is lost. Fault 5223 FBA A communication is only activated after the first data set from the overriding control is received by the unit. Before the first data set is received, only warning 1220 FBA A communication is active. The reason is to suppress unnecessary faults (the startup of the overriding control is usually slower than the one of the units). Check: – The status of the fieldbus communication. See user documentation of the fieldbus interface. – The settings of groups 50 Fieldbus adapter (FBA), 51 FBA A settings, 52 FBA A data in and 53 FBA A data out. – The cable connections. – The fieldbus termination. – The fieldbus adapter. – That the master can communicate.
5224	FBA B communication. Programmable, see 50.32 FBA B comm loss func.	Fieldbus adapter B (FBA B): Cyclical communication between PLC and fieldbus adapter module B or between unit and fieldbus adapter module B is lost. Fault 5224 FBA B communication is only activated after the first data set from the overriding control is received by the unit. Before the first data set is received, only warning 1221 FBA B communication is active. The reason is to suppress unnecessary faults (the startup of the overriding control is usually slower than the one of the units). Check: – The status of the fieldbus communication. See user documentation of the fieldbus interface.

Code	Fault/Notice	Cause and what to do
		– The settings of group 50 Fieldbus adapter (FBA), 54 FBA B settings, 55 FBA B data in and 56 FBA B data out. – The cable connections. – The fieldbus termination. – The fieldbus adapter. – That the master can communicate.
5225	EFB communication. Programmable, see 58.14 Communication loss action.	Cyclical communication to the embedded fieldbus (EFB) is lost. Fault 5225 EFB communication is only activated after the first data set from the overriding control is received by the unit. Before the first data set is received, only warning 1224 EFB communication is active. The reason is to suppress unnecessary faults (the startup of the overriding control is usually slower than the one of the units). Check: – The status of the fieldbus master (online, offline, error, etc.). – The settings of group 58 FBA Embedded fieldbus. – The cable connections to connector XD2D on the control board. – The fieldbus termination.
5227	DDCS controller communication. Programmable, see 60.59 DDCS controller comm loss function.	Cyclical communication between DDCS controller and unit is lost or there is no communication at all. The unit is waiting for the very first data set. Check: – The status/settings of the DDCS controller. See user documentation of the DDCS controller. – The adapters between DDCS controller and unit. – The settings of group 60 DDCS communication, 61 D2D and DDCS transmit data and 62 D2D and DDCS receive data. – The fiber optic cable connections.
5228	Master-follower link communication. Programmable, see 60.09 M/F comm loss function.	Cyclical communication between master and a follower (DDCS/D2D) is lost or there is no communication at all. The unit is waiting for the very first data set. Check: – The AUX code. It indicates which node address on the master-follower link is affected. See 60.02 M/F node address in each unit. – The setting of 60.14 M/F follower selection. – The setting of 20.01 Command location. – The settings of group 60 DDCS communication. – The cable connections.
5229	FBA A force trip.	A fault has been forced through fieldbus adapter A. Check the fault information provided by the PLC.
5230	FBA B force trip.	A fault has been forced through fieldbus adapter B. Check the fault information provided by the PLC.
5231	EFB force trip.	A fault has been forced through the embedded fieldbus (EFB) interface. Check the fault information provided by the Modbus controller.
5232	Follower. Programmable, see 60.17 Follower fault action.	A follower has tripped. Check the AUX code to find out the node address of the faulted follower. See 60.02 M/F node address. Correct the fault in the follower.
5233	FBA A mapping file.	Fieldbus adapter A mapping file read error. Contact your local ABB representative.

Code	Fault/Notice	Cause and what to do
5234	FBA A parameter conflict.	Fieldbus adapter A (FBA A): The unit does not have a functionality requested by a PLC or a requested functionality has not been activated. The settings of parameter groups 50 Fieldbus adapter (FBA) and 51 FBA A settings are not set according to the fieldbus adapter, or the device has not been selected. Check: – The PLC programming. – The settings of parameter groups 50 Fieldbus adapter (FBA) and 51 FBA A settings. – The configuration of the fieldbus adapter.
5235	FBA B mapping file.	Fieldbus adapter B mapping file read error. Contact your local ABB representative.
5236	FBA B parameter conflict.	Fieldbus adapter B (FBA B): The unit does not have a functionality requested by a PLC or a requested functionality has not been activated. The settings of parameter groups 50 Fieldbus adapter (FBA) and 54 FBA B settings are not set according to the fieldbus adapter, or the device has not been selected. Check: – The PLC programming. – The settings of parameter groups 50 Fieldbus adapter (FBA) and 54 BA B settings. The configuration of the fieldbus adapter.
5237	EFB configuration file.	Embedded fieldbus (EFB) configuration file could not be read. Reload firmware or replace the unit.
5238	EFB invalid parameterization.	Embedded fieldbus (EFB) parameter settings are inconsistent or not compatible with the selected protocol. Check the settings of group 58 Embedded fieldbus and verify they are consistent with the configured protocol.
5239	EFB load fault.	Embedded fieldbus (EFB) protocol firmware could not be loaded. / Version mismatch between embedded fieldbus (EFB) protocol firmware and unit firmware. — Reload firmware or replace the unit.
5242	Text data overflow.	Internal fault. Reset the fault. Contact your local ABB representative if the fault persists.
5243	Text 32-bit table overflow.	
5245	Text 64-bit table overflow.	
5245	Text file overflow.	
5249	Internal task overload.	Internal fault. Cycle the power of the unit or use 96.08 Control board boot. If the problem persists, contact your local ABB representative stating the AUX code.
5250	Internal stack overflow.	Internal fault. Cycle the power of the unit or use 96.08 Control board boot. If the problem persists, contact your local ABB representative stating the AUX code.
5251	Internal file load.	File read error. Cycle the power of the unit or use 96.08 Control board boot. Check:

Code	Fault/Notice	Cause and what to do
		– The memory unit. – Re-load the firmware. – Exchange the memory unit. – Exchange the SDCS-CON-H01. If the problem persists, contact your local ABB representative.
5252	Internal record load.	Internal record load error. Contact your local ABB representative.
5254	Memory unit detached.	The memory unit was detached while the unit is powered. Switch off the power to the unit and reinstall the memory unit. In case the memory unit was not actually removed when the fault occurred, check that the memory unit is properly inserted into its connector and its mounting screw is tight. Then cycle the power of the unit or use 96.08 Control board boot. If the problem persists, contact your local ABB representative.
5255	Internal firmware.	Internal firmware fault. Cycle the power of the unit or use 96.08 Control board boot. If the problem persists, contact your local ABB representative.
5256	User set fault.	Loading of user parameter set failed. Ensure that a valid user parameter set exists. Reload if uncertain. Check: – That the requested set does exists. See 96.04 Macro select. – That the set is compatible with the control program. – If the unit was switched off during loading. – The memory unit.
5257	Kernel overload.	Operating system error. Cycle the power of the unit or use 96.08 Control board boot. If the problem persists, contact your local ABB representative.
5258	Parameter system.	Parameter load or save failed. Try forcing a save using 96.07 Parameter save manually.
5260	Licensing.	Running the control program is prevented either because a restrictive license exists, or because a required license is missing. Record the AUX codes of all active licensing faults and contact your product vendor for further instructions.
5261	Adaptive program.	Error running the adaptive program. Check the AUX code (format XXXXYYYY). XXXX specifies the number of the function block. XXXX = 0000 is a generic error. YYYY indicates the problem. Actions see below.
	000A	Program corrupted or block non-existent. Restore the template program or download the program to the unit.
	000C	Required block input missing. Check the inputs of the block.
	000E	Program corrupted or block non-existent. Restore the template program or download the program to the unit.
	0011	Program too large. Remove blocks until the error stops.
	0012	Program is empty. Correct the program and download it to the unit.
	001C	A nonexistent parameter or block is used in the program. Edit the program to correct the parameter reference, or to use an existing block.
	001D	Parameter type invalid for selected input. Edit the program to correct the parameter reference.
	001E	Output to parameter failed because the parameter was write-protected.

Code	Fault/Notice	Cause and what to do
		Check: – The parameter reference in the program. – For other sources affecting the target parameter.
	0023	Program file incompatible with current firmware version.
	0024	Adapt the program to current block library and firmware version.
	002A	Too many blocks. Edit the program to reduce the number of blocks.
	Other	Contact your local ABB representative, quoting the AUX code.
5299	Fault reset.	A fault has been reset. Notice.
5265	Incompatible option module.	Option module not supported. E.g., type Fxxx-xx-M fieldbus adapters are not supported. Replace the module with a supported type. Check the AUX code. It specifies the interface to which the unsupported module is connected: – 1: Fieldbus interface A. – 2: Fieldbus interface B.
5501	Aux undervoltage	For 1 ... T5 and T6 special design with SDCS-PIN-H11: Aux voltage < 21.2 V_{DC}. Recovery at 21.9 V_{DC} (0.7 V hysteresis). Check: – 24 V_{DC} auxiliary voltage at XAUX. – Chapter XAUX: Auxiliary voltage input (X99 for T1 ... T5 and T6 special design). For T6 standard and T8 with SDCS-POW-H01: Too low auxiliary voltage, e.g., a short dip. To reset, cycle the auxiliary power of the unit. Check: – Chapter Auxiliary supply voltage XAUX (X99 for T6 standard and T8). – The auxiliary voltage itself. – The internal auxiliary voltages on the SDCS-CON-H01. – If the problem persists, change SDCS-CON-H01 and/or SDCS-PIN-H01 or SDCS-POW-H01, respectively. Auxiliary supply voltage: 230/115 V_{AC} Trip level: < 90 V_{AC}

5508	Ext I/O comm loss.
	
	Programmable, see 28.14 Ext I/O comm loss event. See also warning A799.
		The I/O extension module types and locations specified by parameters do not match the detected configuration or do not communicate with the unit.
		Check:
		– The type and location settings of the modules. See parameters 14.01, 14.02, 15.01, 15.02, 16.01 and 16.02.
		– That the module/board is properly seated in its slot.
		– That the module/board and the slot connector is not damaged.
		– Try installing the module into another slot.
		– Check the AUX code (format XXYYYYYY).
		XX specifies the number of the I/O extension module.
		  – 01: Group 14 I/O extension module 1.
		  – 02: Group 15 I/O extension module 2.
		  – 03: Group 16 I/O extension module 3.
		YYYYYY indicates the problem. Actions see below.

	00 0001	Communication with module failed.
	00 0002	Module not found.
	00 0003	Configuration of module failed.

Code	Fault/Notice	Cause and what to do
	00 0004	

5525	Type code.	The hardware of the unit/SDCS-CON-H01 does not match the information stored in the memory unit. This may occur e.g., after a firmware update, memory unit replacement or replacement of the SDCS-CON-H01.
		To reset, cycle the auxiliary power of the unit.
		Check:
		– The settings of 95.14 Set: Power unit (if shown and available), 95.16 Set: Unit type code, 95.17 Set: Unit legs, 95.18 Set: Unit output current scaling and 95.19 Set: Unit input voltage scaling.
		– The AUX code (format ZZ).
		ZZ indicates the AUX code category.
		  – 06 = Power unit rating ID invalid.
		  – 07 = Reading power unit rating ID or power unit type failed on power unit connection.
		  – 08 = Power unit not supported (illegal rating ID).
		  – 09: = Power unit type mismatch. See 95.14 Set: Power unit = **Unsupported power unit type**.
		  – 10 = Type code out of range.
		  – 20 = Saving of 95.16 Set: Type code failed.
		  – 21 = Saving of 95.14 Set: Power unit failed.

5545	Application loading.	Application file incompatible or corrupted. Check the AUX code. Actions see below.
	8006	Not enough memory for the application.
	8007	The application contains the wrong library version.
	800A	The application contains an unknown target (system) library function.
	800B … XXXX	The application load failed.
5546	Control panel/PC tool link communication. Programmable, see 49.05 Communication loss action.	This fault occurs only when the unit is controlled from the control panel/PC tool (local mode). The control panel/PC tool connected via USB, or the PC tool connected via FENA-11/21 has stopped communicating. Check: – The setting of 49.04 Communication loss time. – If needed extend the time out to 2000 ms. Do not forget to verify the setting by means of 49.06 Refresh settings Refresh. – The setting of 49.05 Communication loss action. – If changed, do not forget to verify the setting by means of 49.06 Refresh settings Refresh. – The control panel/PC tool connection/cable. – The control panel connector. – The mounting platform if being used (e.g., DPMP-01). – Disconnect and reconnect the control panel/PC tool.
5547	Unit hardware.	Unit hardware failure. To reset, cycle the auxiliary power of the unit. If the problem persists, check the AUX code (format YYYY). YYYY indicates the problem. Actions see below.
	0050	Parameter flash memory faulty (erase).
	0051	Parameter flash memory faulty (program).
	0052	Check connector XC12 on SDCS-CON-H01 and connector XC12 on SDCS-PIN-H11.
5548	Internal firmware.	Internal firmware error.

Code	Fault/Notice	Cause and what to do
		To reset, cycle the auxiliary power of the unit. If the problem persists, contact your local ABB representative, quoting the AUX code. Check the AUX code (format YYYY). YYYY indicates the problem. Actions see below.
	0001	Default setting of parameters wrong.
	0002	Parameter flash memory image too small for all parameters.
	0004	Illegal write attempt on a signal or write-protected parameter.
	0006	Wrong type code.
	0007	An un-initialized interrupt has occurred.
	0010	Wrong parameter value.
	0101 … 9999	The read only parameter, which is being written to by means of a pointer parameter, e.g., 62.51 Data set 10 data 1 selection, Adaptive Program, or application program, can be identified by means of the last 4 digits.
5551	AI supervision. Programmable, see 12.03 AI supervision function.	An analog signal is outside the limits specified for the analog input. Check: – The AUX code (format XYY). X specifies the location of the input. – 0: Control board. – 1: I/O extension module 1. – 2: I/O extension module 2 – 3: I/O extension module 3. – 4: …. YY specifies the input and limit. – 01: AI1 under minimum. – 02: AI1 over maximum. – 03: AI2 under minimum. – 04: AI2 over maximum. – 05: AI3 under minimum. – 06: AI3 over maximum. – The signal level at the analog input. – The wiring connected to the input. – Polarity of the connection. – The minimum and maximum limits of the input in groups 12 Standard AI, 14 I/O extension module 1, 15 I/O extension module 2 and 16 I/O extension module 3.
5681	Power unit, communication. See also warning A113.	Communication errors between the control unit and a power unit. Check: – The setting of 95.15. Control unit configuration.

Code	Fault/Notice	Cause and what to do
		– The connections between the control unit and the power unit. 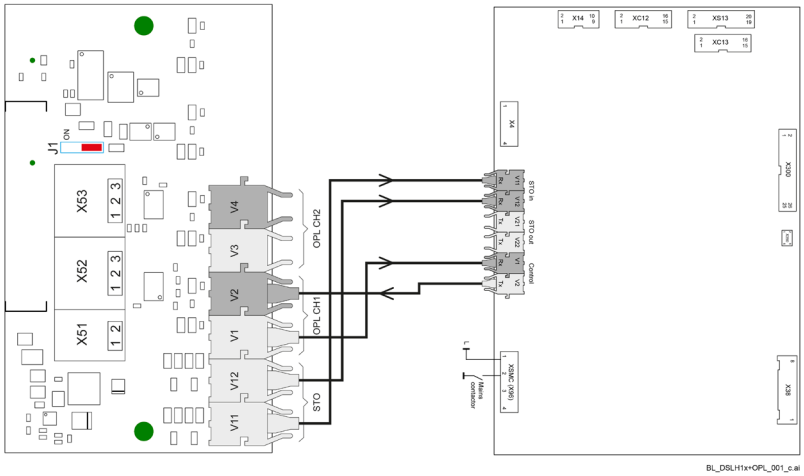 – The auxiliary power of the SDCS-OPL-H01. – The AUX code (format XXXYYYZZ). XXX specifies the transmitter FIFO error code. – 000: No transmitter FIFO error. – 001: Internal error [invalid call parameter]. – 002: Internal error [configuration not supported]. – 003: Transmission buffer full. YYY identifies the power unit. – 000: Broadcast. – 001: Power unit connected to channel1 on SDCS-DSL-H1x. ZZ specifies the error source. – 01: Transmitter side [link error] from power unit to control unit. – 02: Transmitter side [no communication] from power unit to control unit. – 03: Receiver side [link error] from control unit to power unit. – 04: Receiver side [no communication] from control unit to power unit. – 05: Transmitter FIFO error, see XXX. – 06: SDCS-OPL-H01 not found.
5692	Power unit, power board failure.	Power unit, SDCS-POW-H01 failure. Check the AUX code (format XXXYYYZZ). For the DCT880 YYY is always 001.
F524	Mains contactor acknowledge.	Mains contactor acknowledge at the DI is missing. Check: – The settings of 19.37 Mains contactor acknowledge source. – The switch on/off sequence. – The auxiliary contactor/relay switching the mains contactor after an On/Off command. – The used digital inputs and outputs (groups 10 and 11).

User faults

Code	Fault/Notice	Cause and what to do
5601	AP Fault 1.	reserved
5602	AP Fault 2.	reserved
5603	AP Fault 3.	reserved
5604	AP Fault 4.	reserved

Code	Fault/Notice	Cause and what to do
5605	AP Fault 5.	reserved

Bootloader faults

Code	Fault/Notice	Cause and what to do
FB11	Memory unit missing.	No memory unit is attached to the unit. Power down the unit. Check that the memory unit is properly inserted into the unit.
		The memory unit attached to the unit is empty. Power down the unit. Attach a memory unit with the appropriate firmware to the unit.
FB12	Memory unit incompatible.	The memory unit attached to the unit is incompatible. Try to download a compatible firmware. If the problem persists, power down the unit. Attach a compatible memory unit.
-	Panel and unit not compatible. 	The control panel attached to the unit is incompatible or broken. Attach a working and compatible control panel.
FB13	Memory unit, firmware incompatible.	The firmware on the attached memory unit is incompatible with the unit. Try to download a compatible firmware. If the problem persists, power down the unit. Attach a memory unit with a compatible firmware.
FB14	Memory unit, firmware load failed.	The firmware on the attached memory unit could not be loaded to the unit. Memory unit might be empty, download a compatible firmware. If the problem persists, power down the unit. Check that the memory unit is properly inserted into the unit. If the problem persists, replace the memory unit.

Firmware structure diagrams

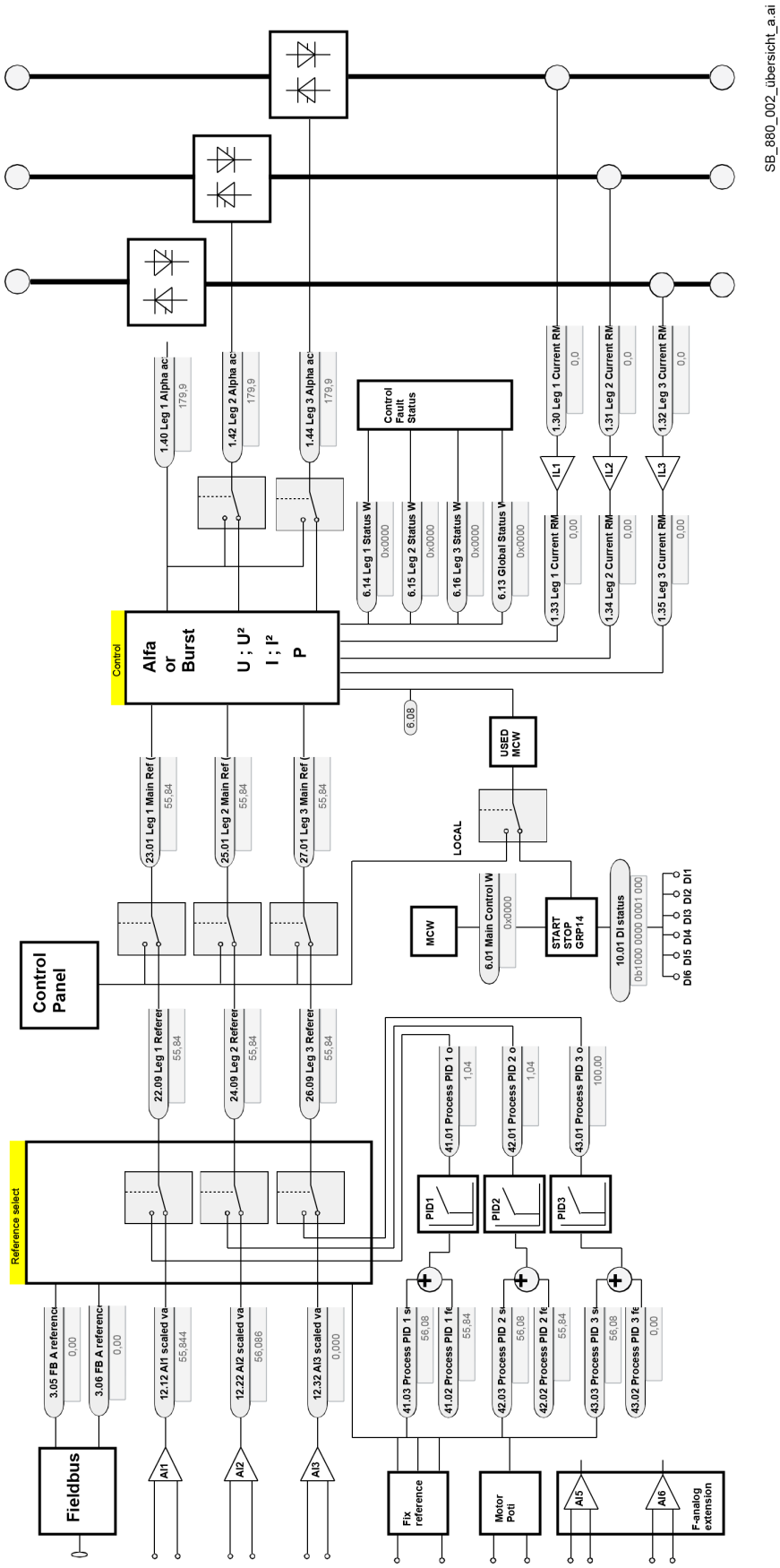

SB_880_002_übersicht_a.ai

Firmware overview diagram

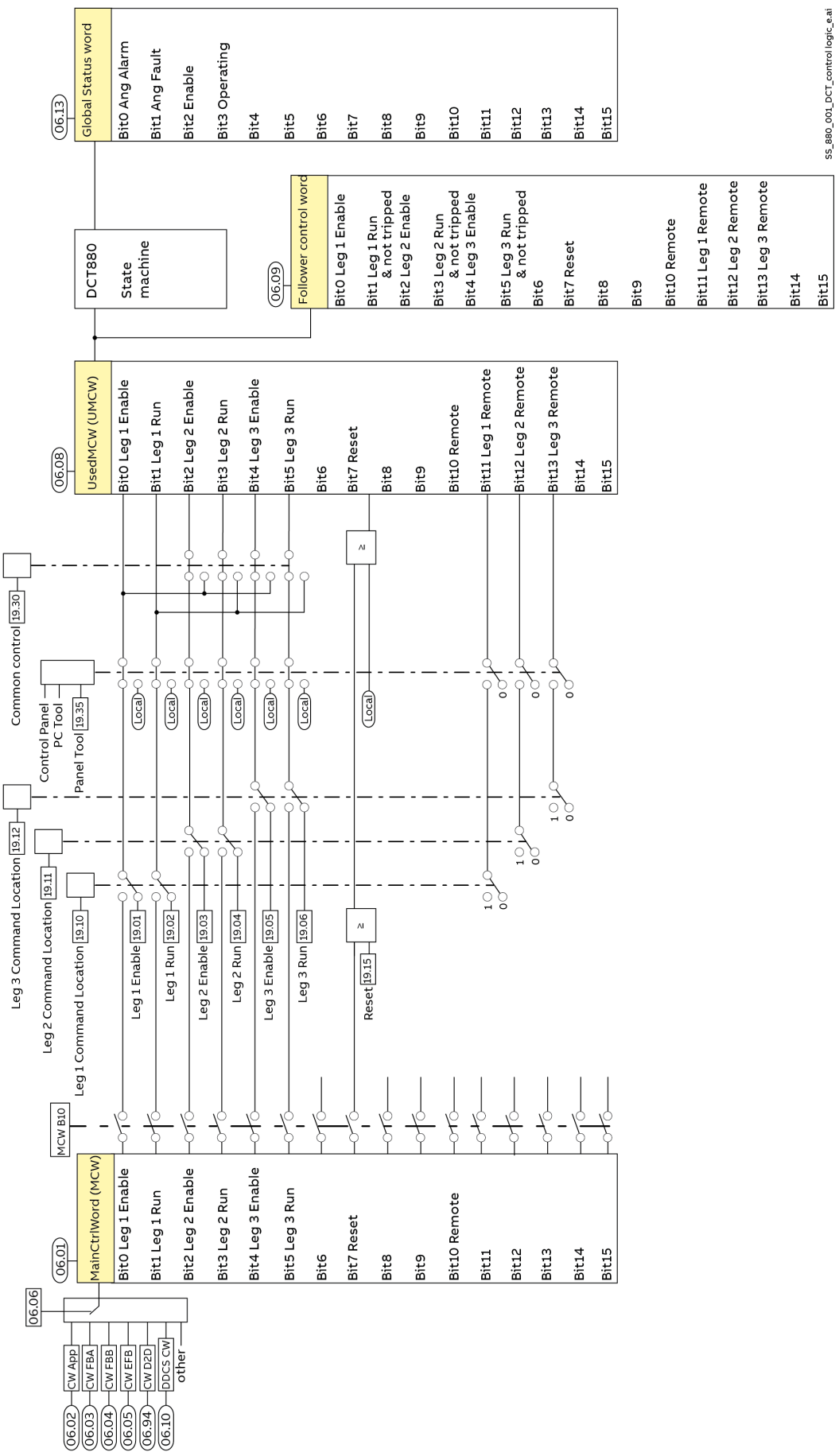

Command chain diagram

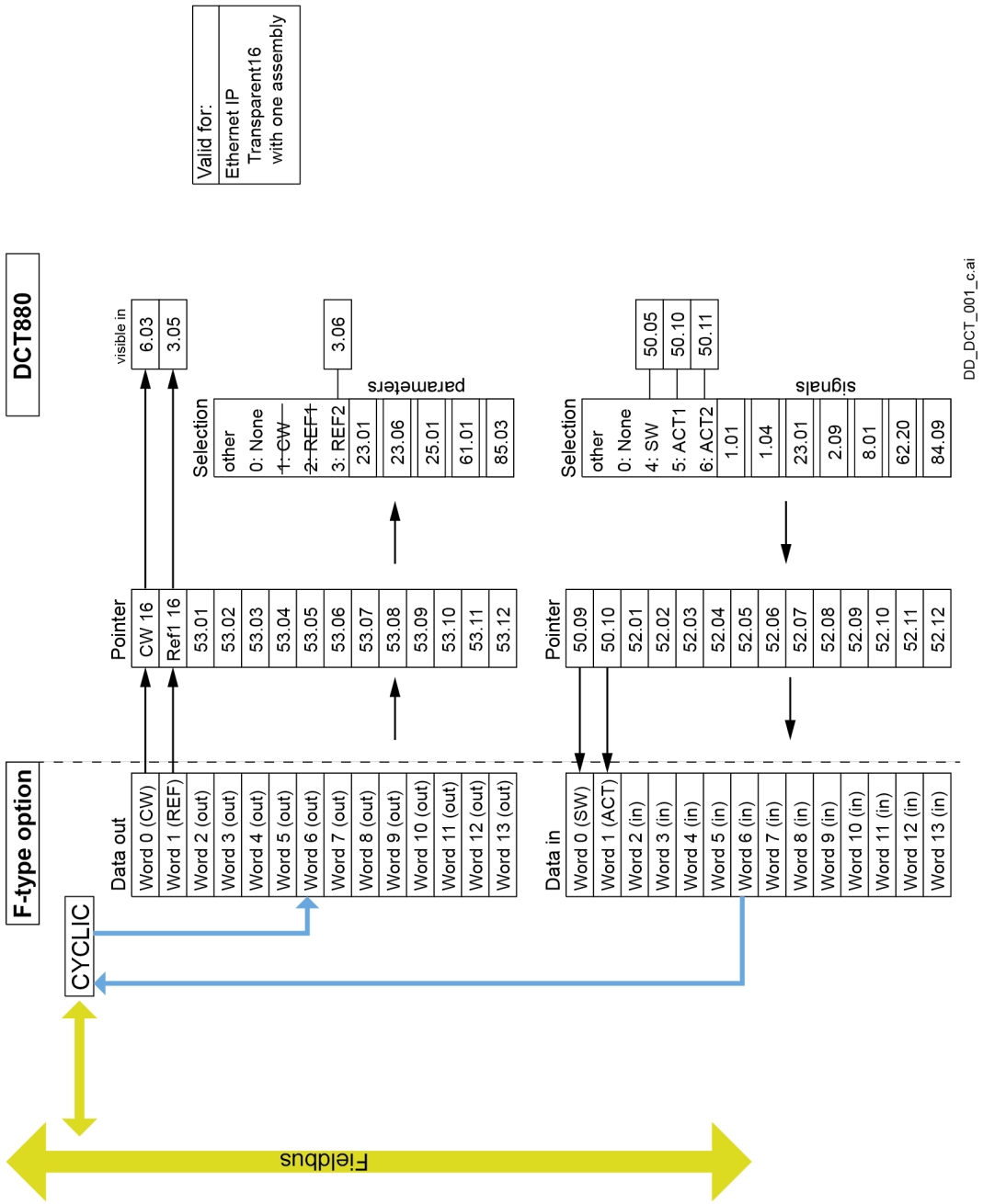

Diagram of data transfer via F-type fieldbus adapter using FBA and transparent 16-bit profile

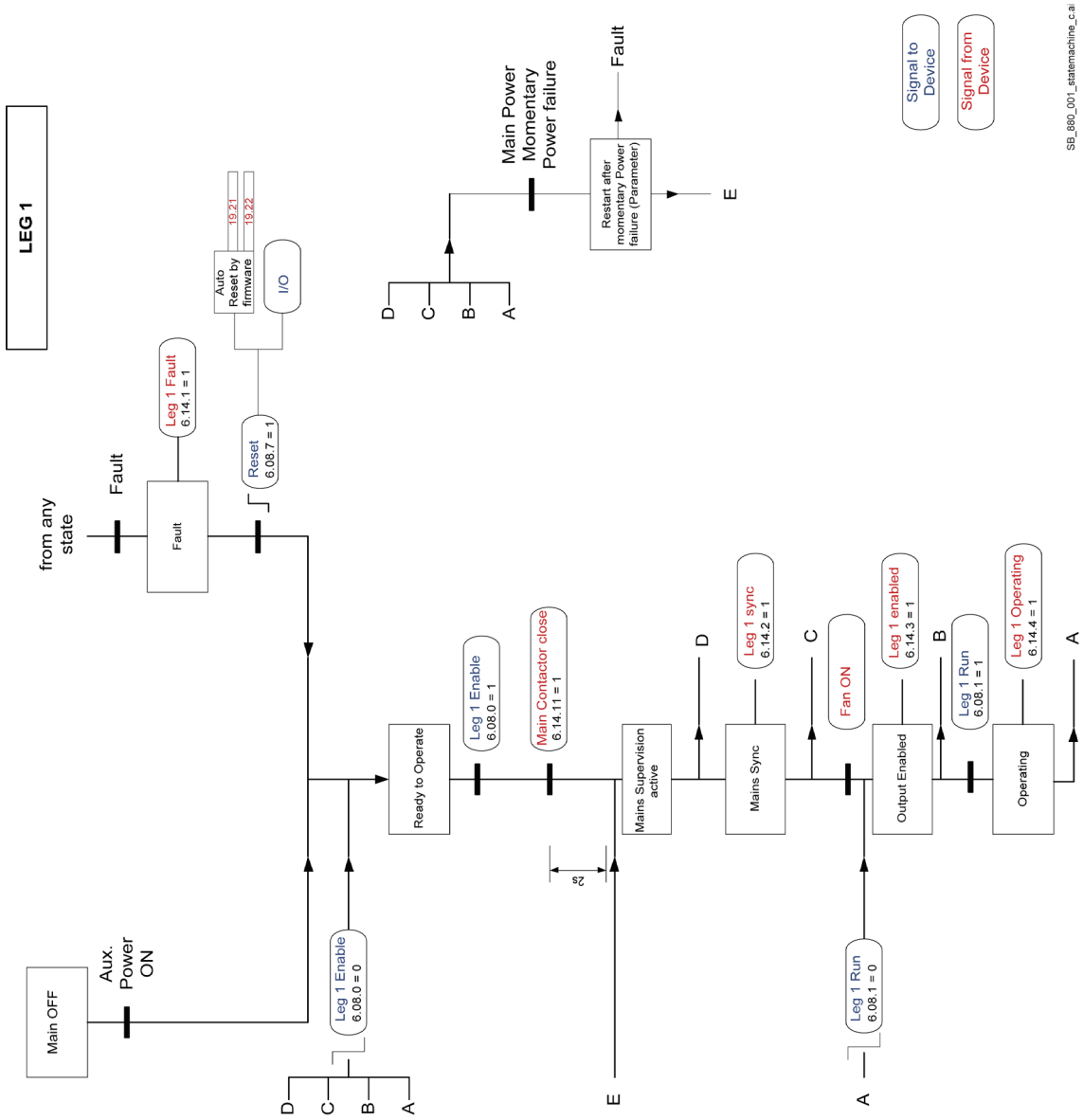

Leg 1 state machine

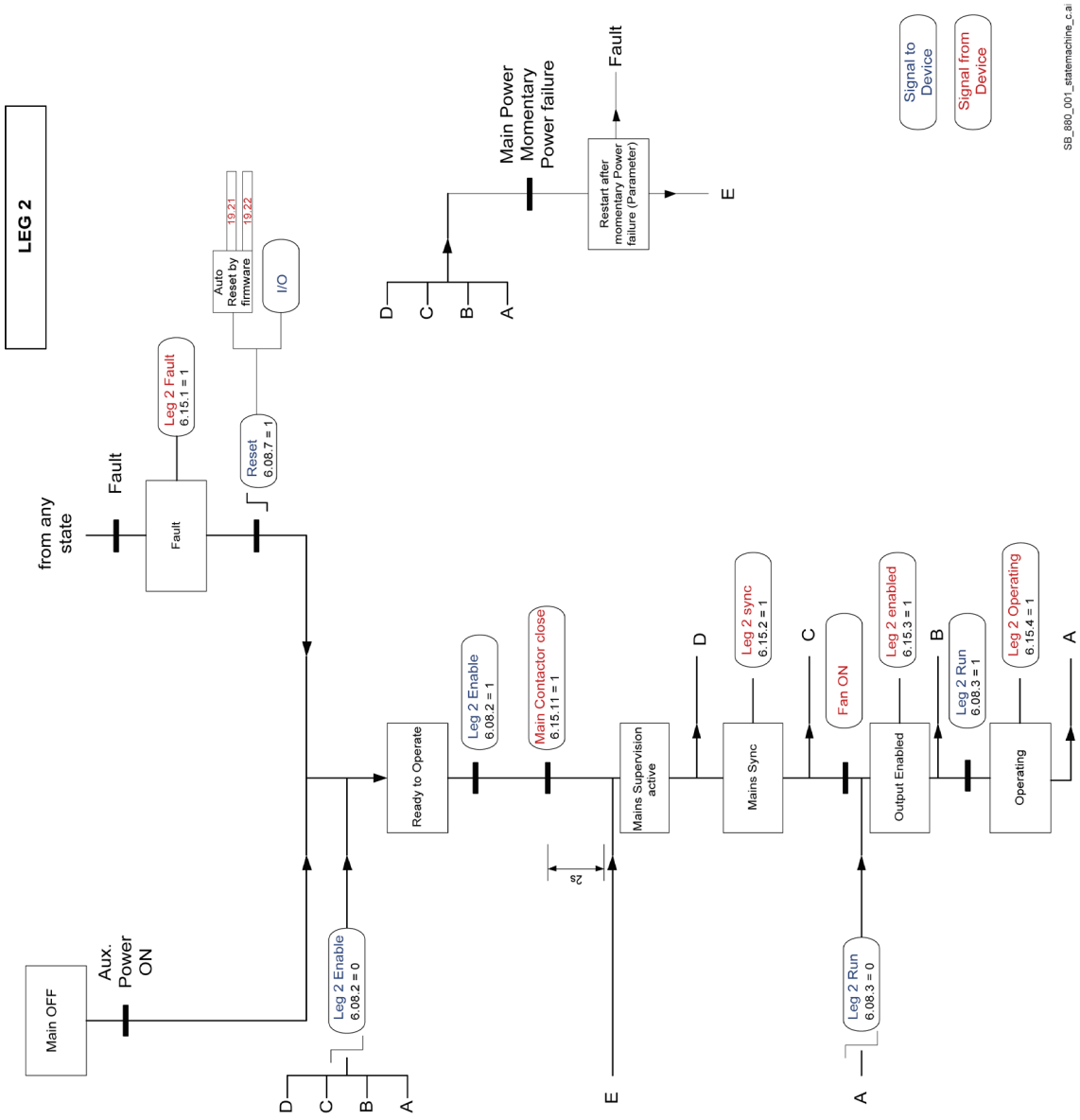

Leg 2 state machine

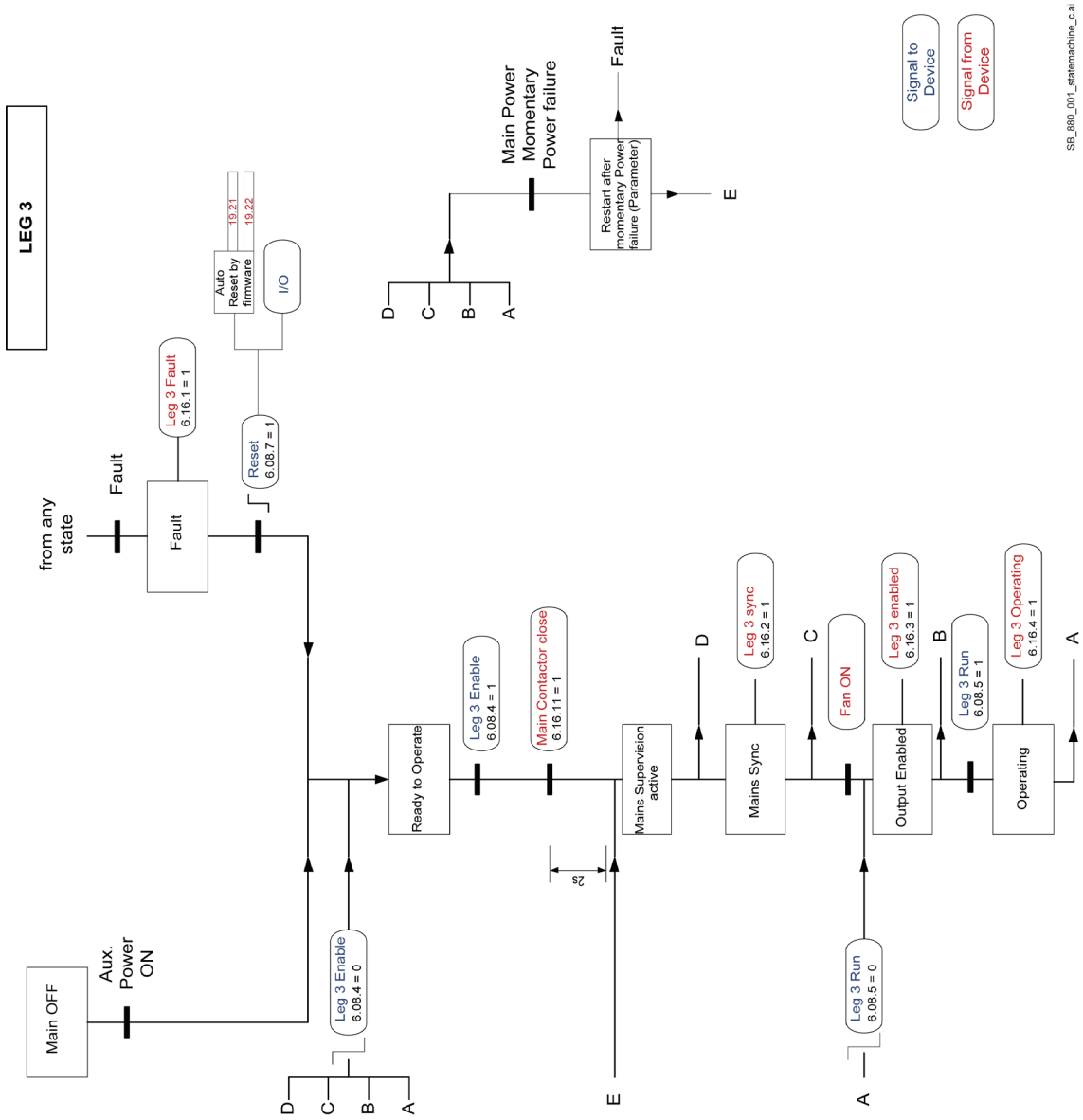

Leg 3 state machine

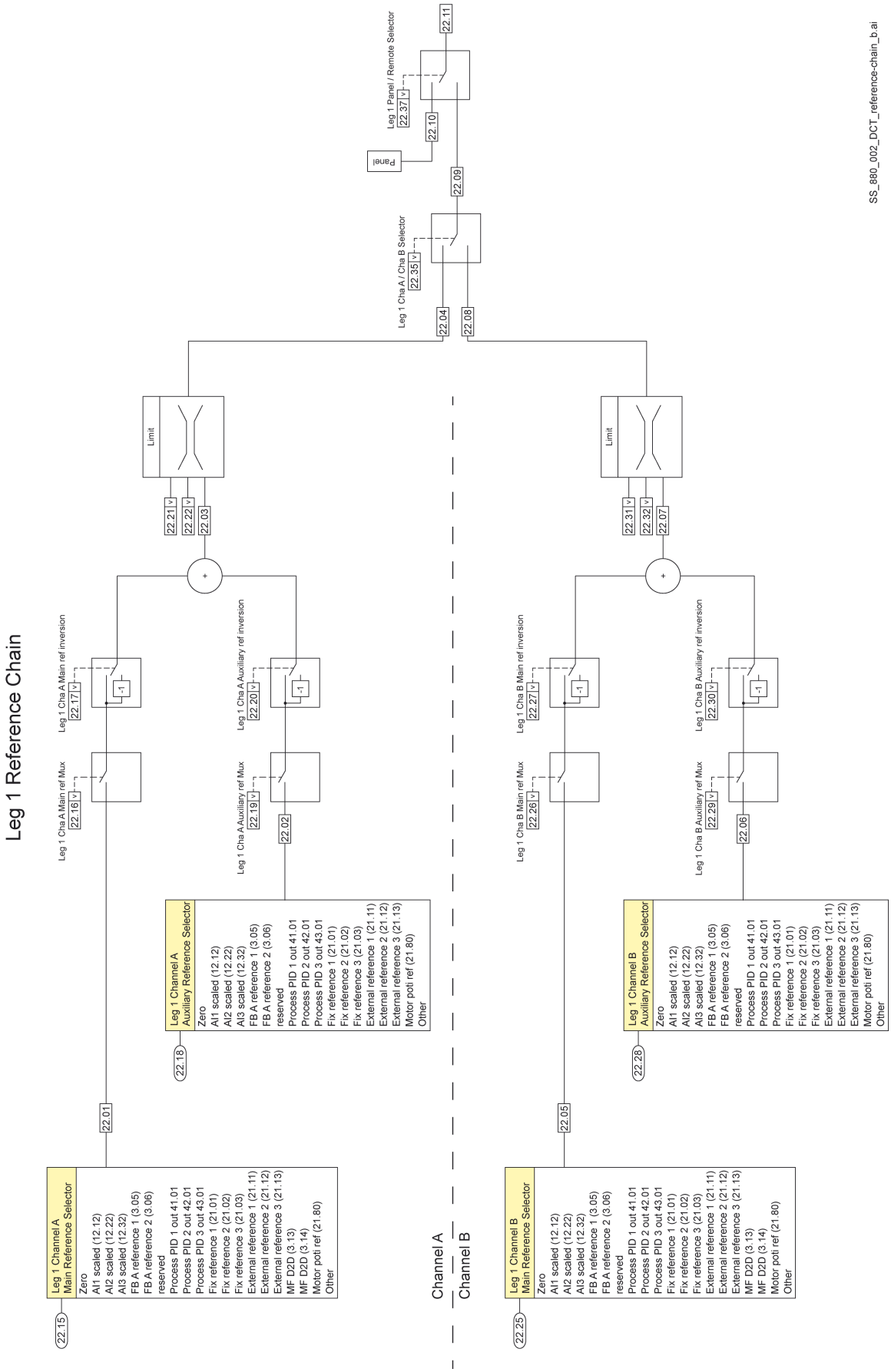

Leg 1 Reference chain diagram

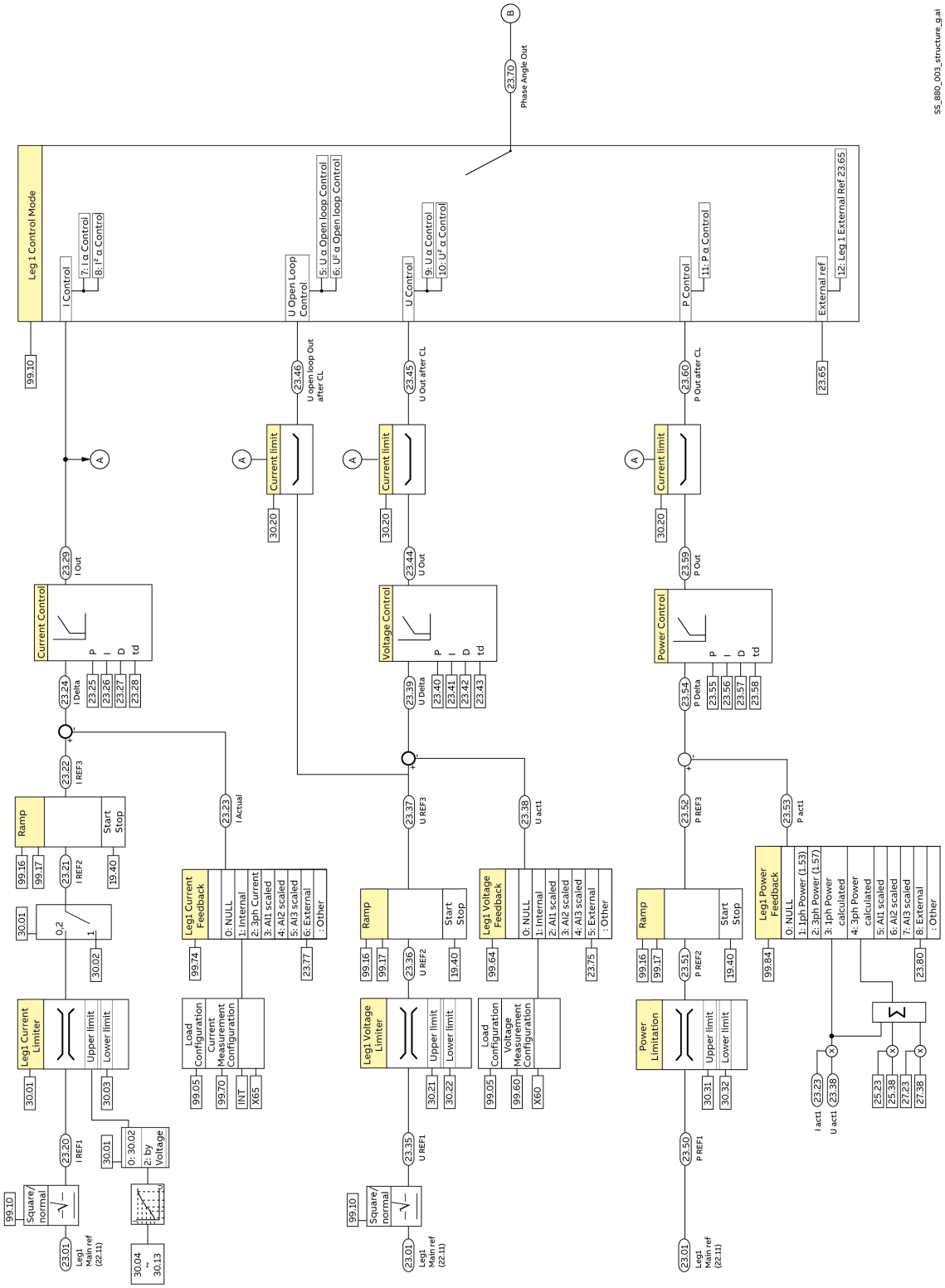

Leg 1 Reference chain diagram

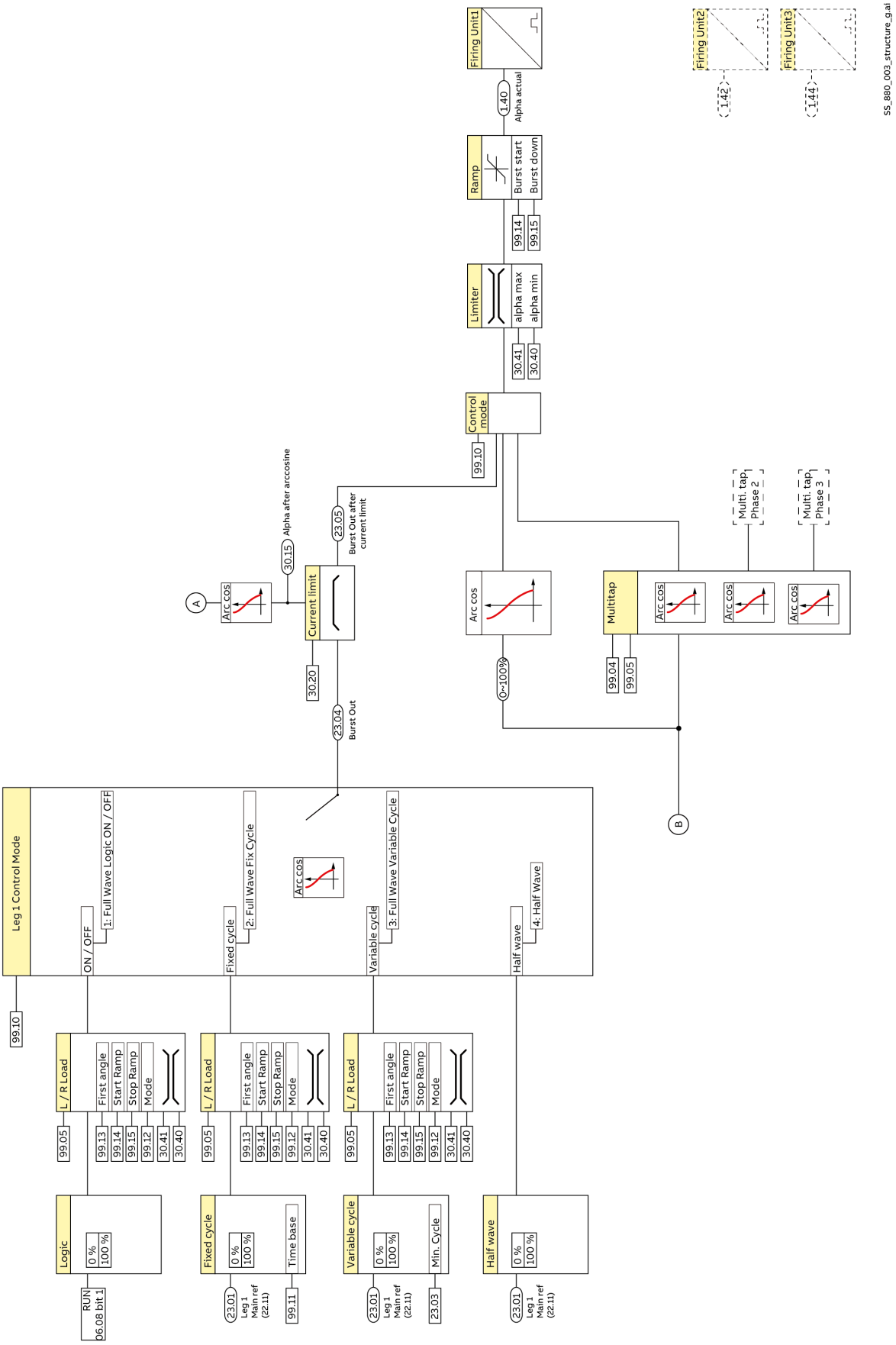

Leg 1 Reference chain diagram

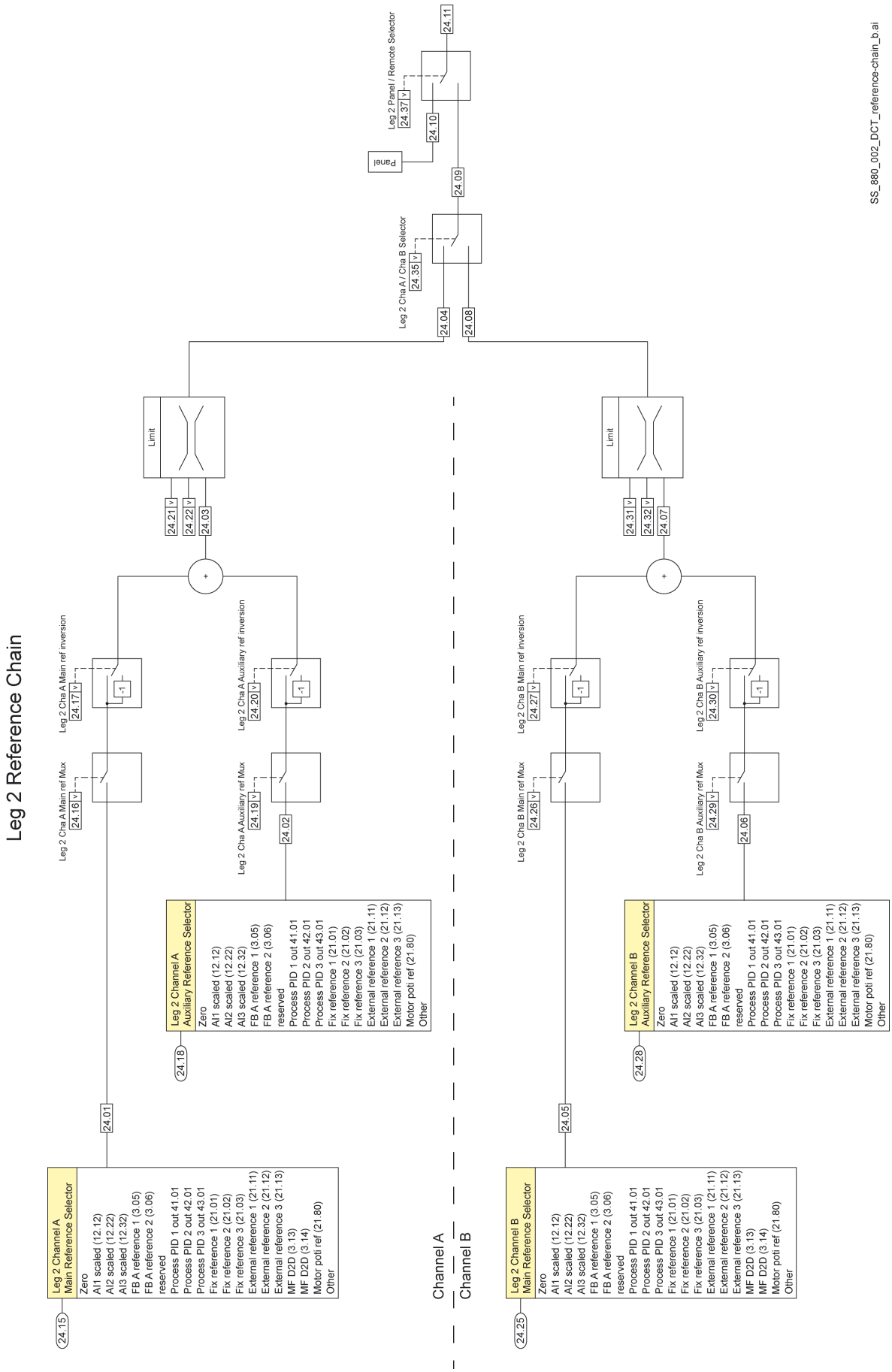

Leg 2 Reference chain diagram

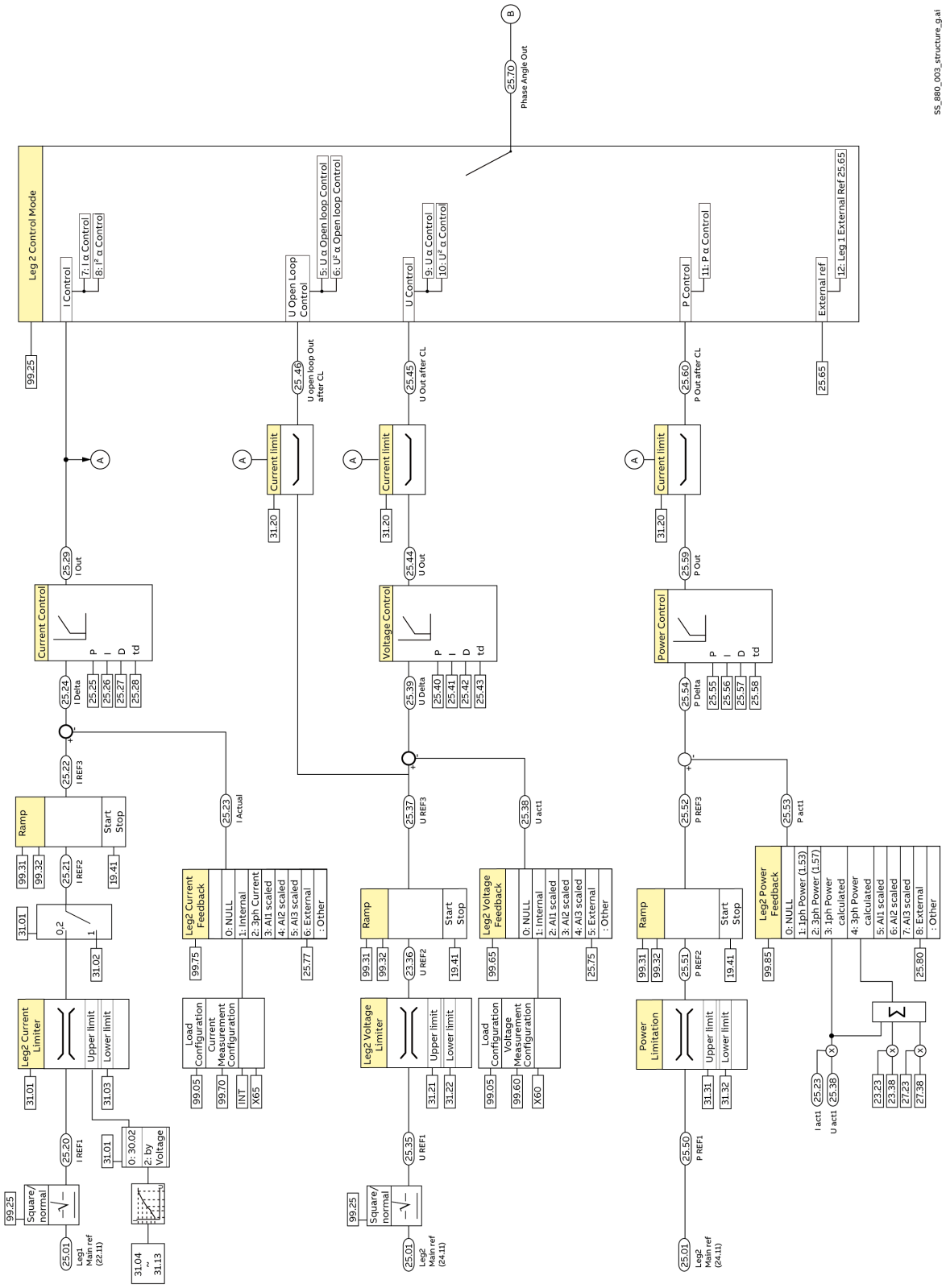

Leg 2 Reference chain diagram

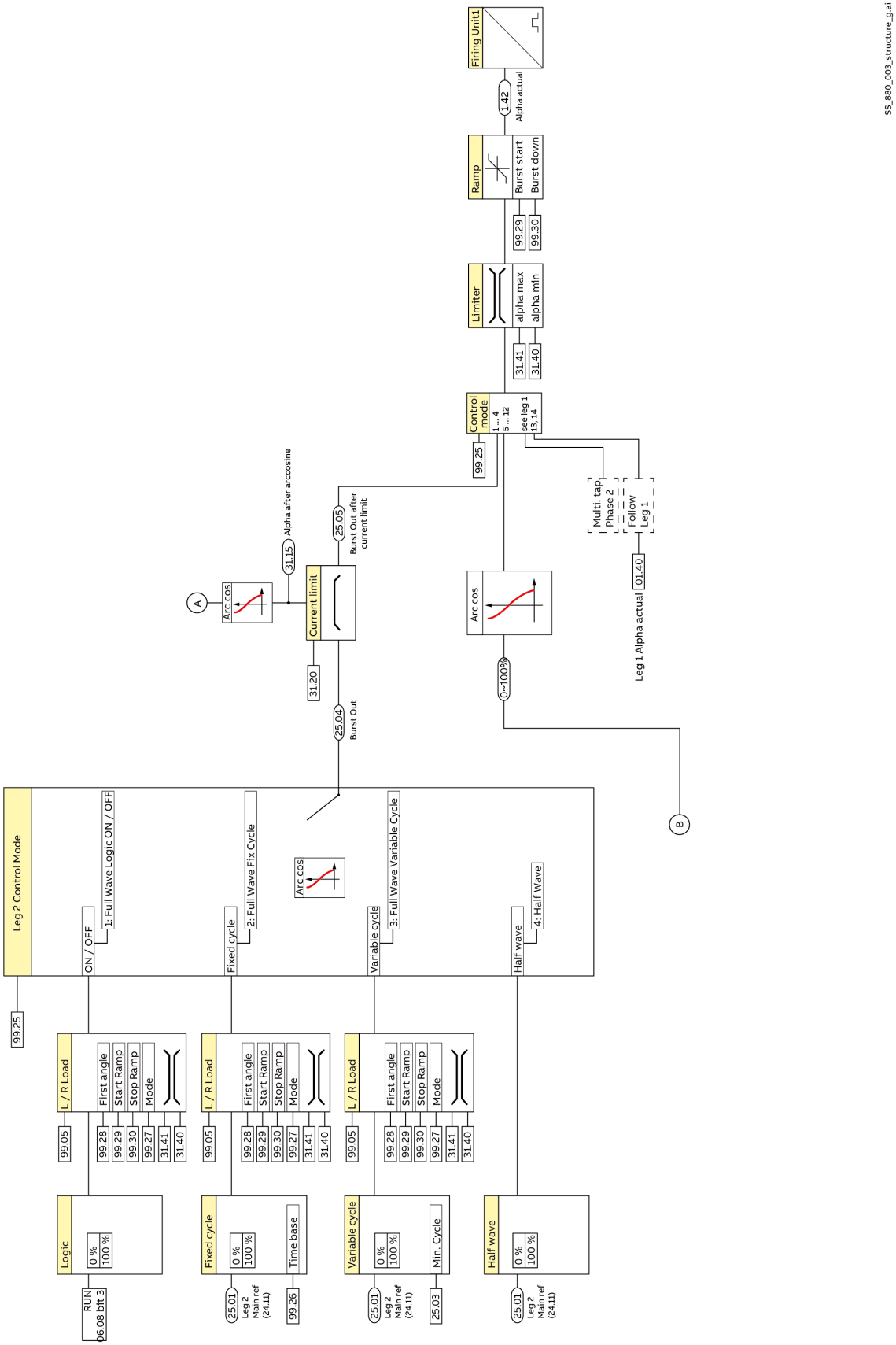

Leg 2 Reference chain diagram

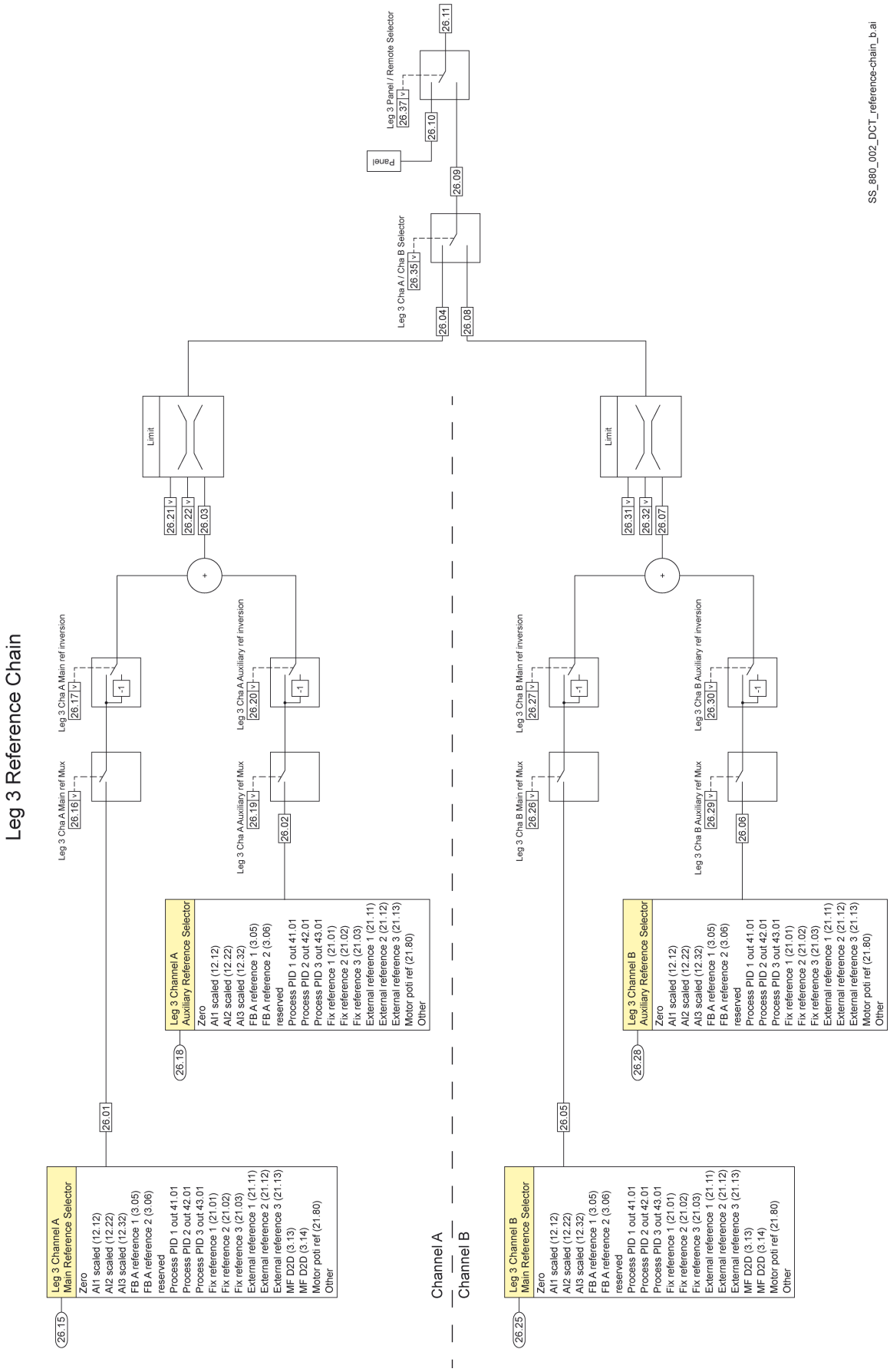

Leg 3 Reference chain diagram

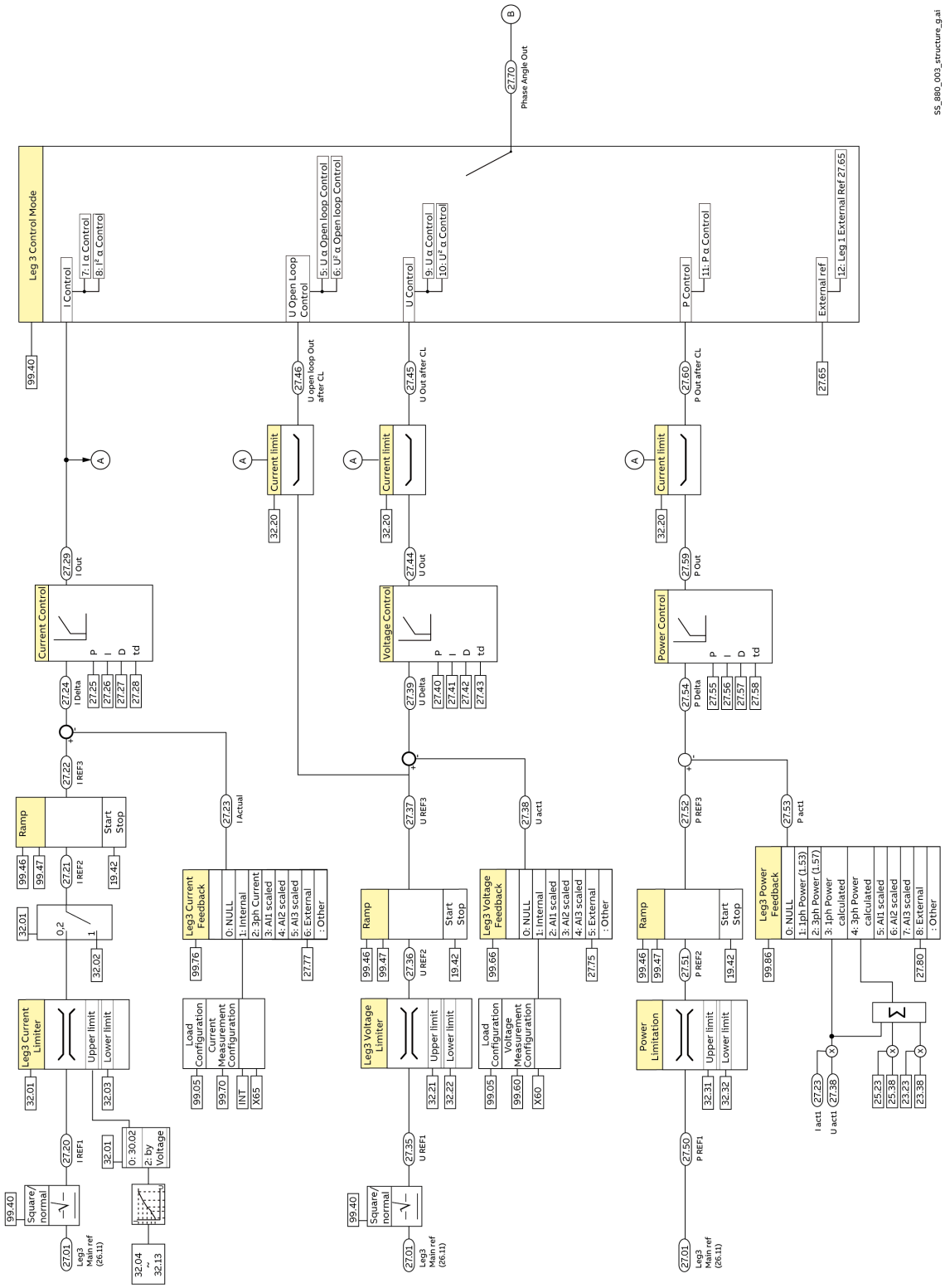

Leg 3 Reference chain diagram

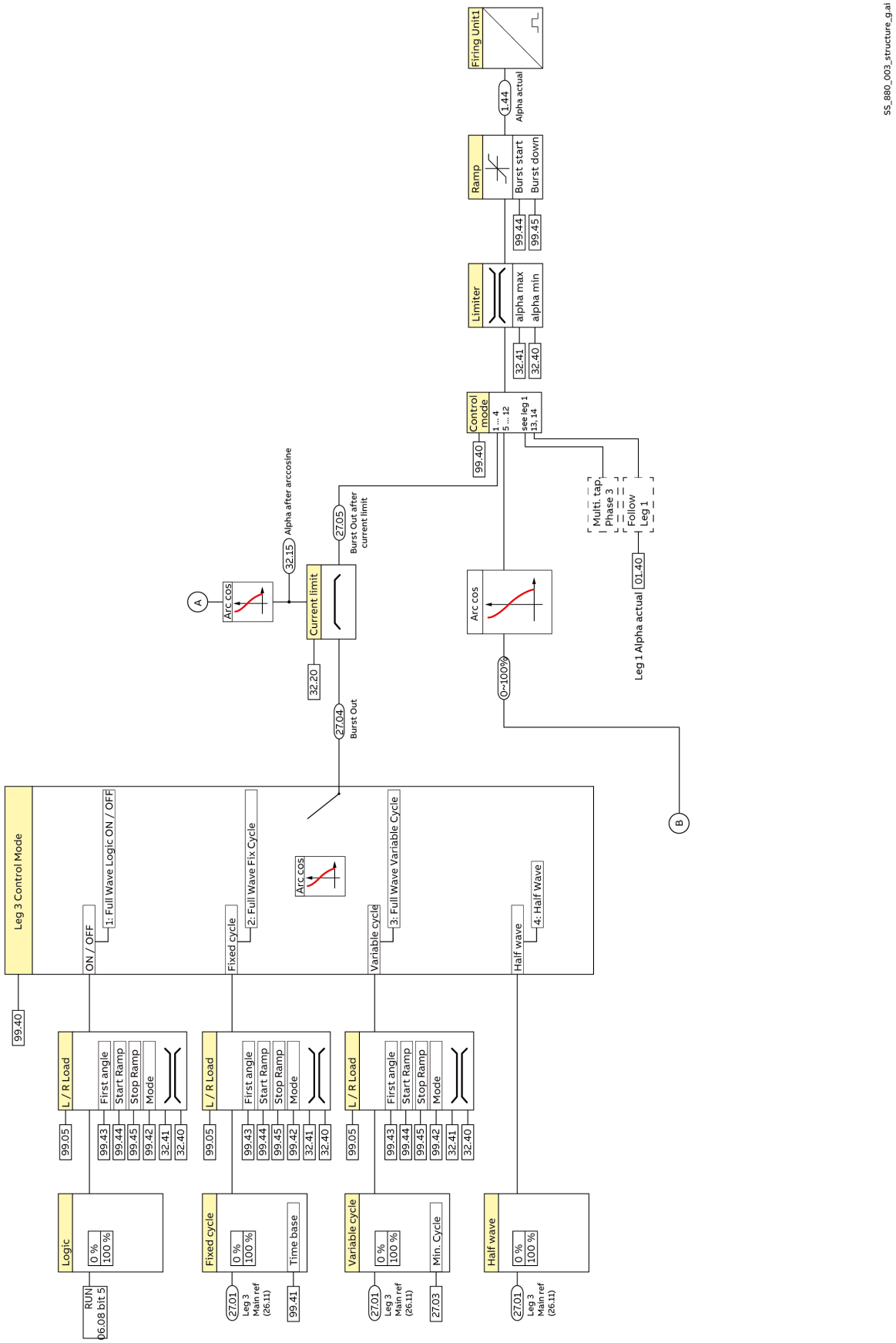

Leg 3 Reference chain diagram

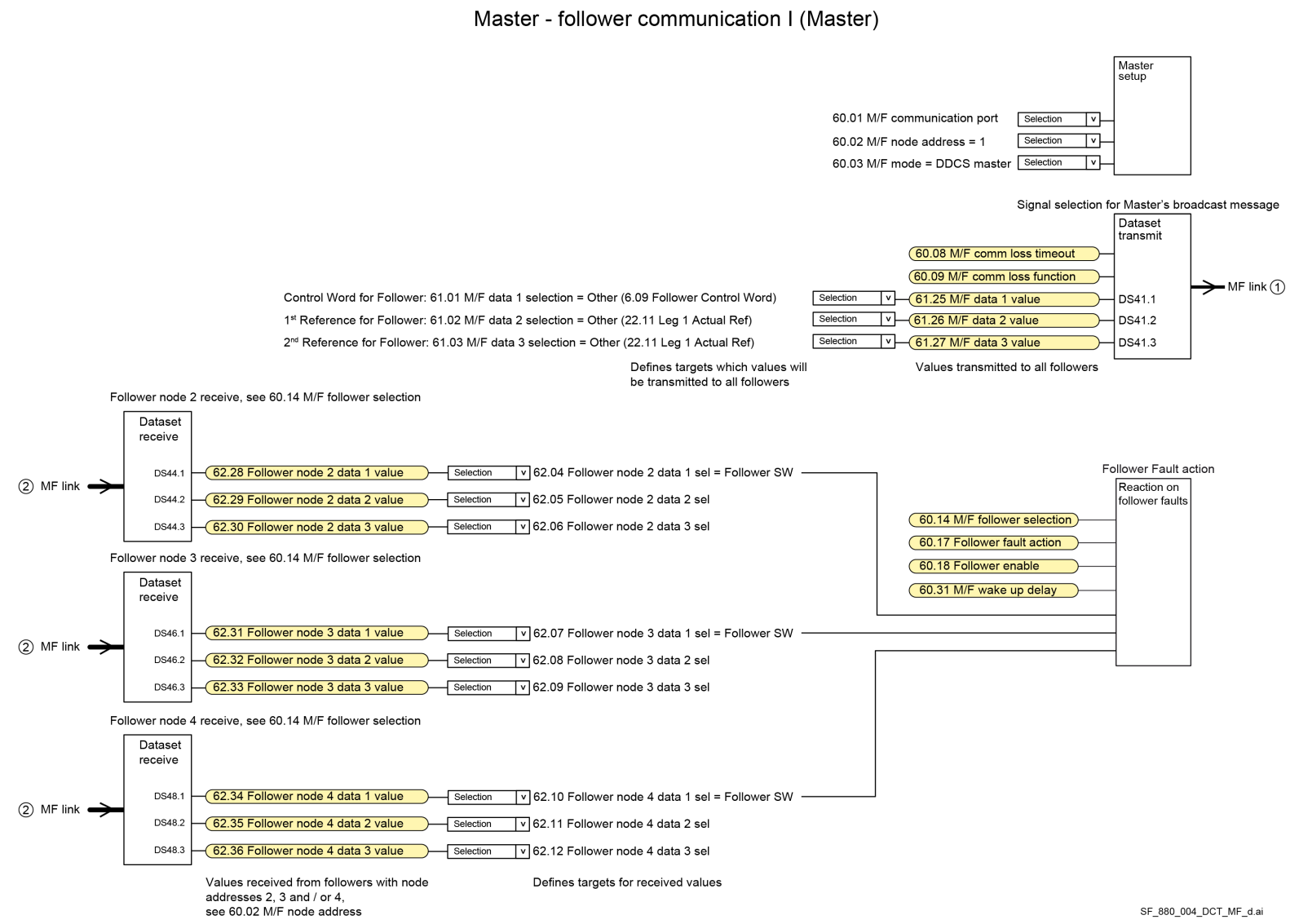

Master - follower communication (Master)

Master - follower communication II (Follower)

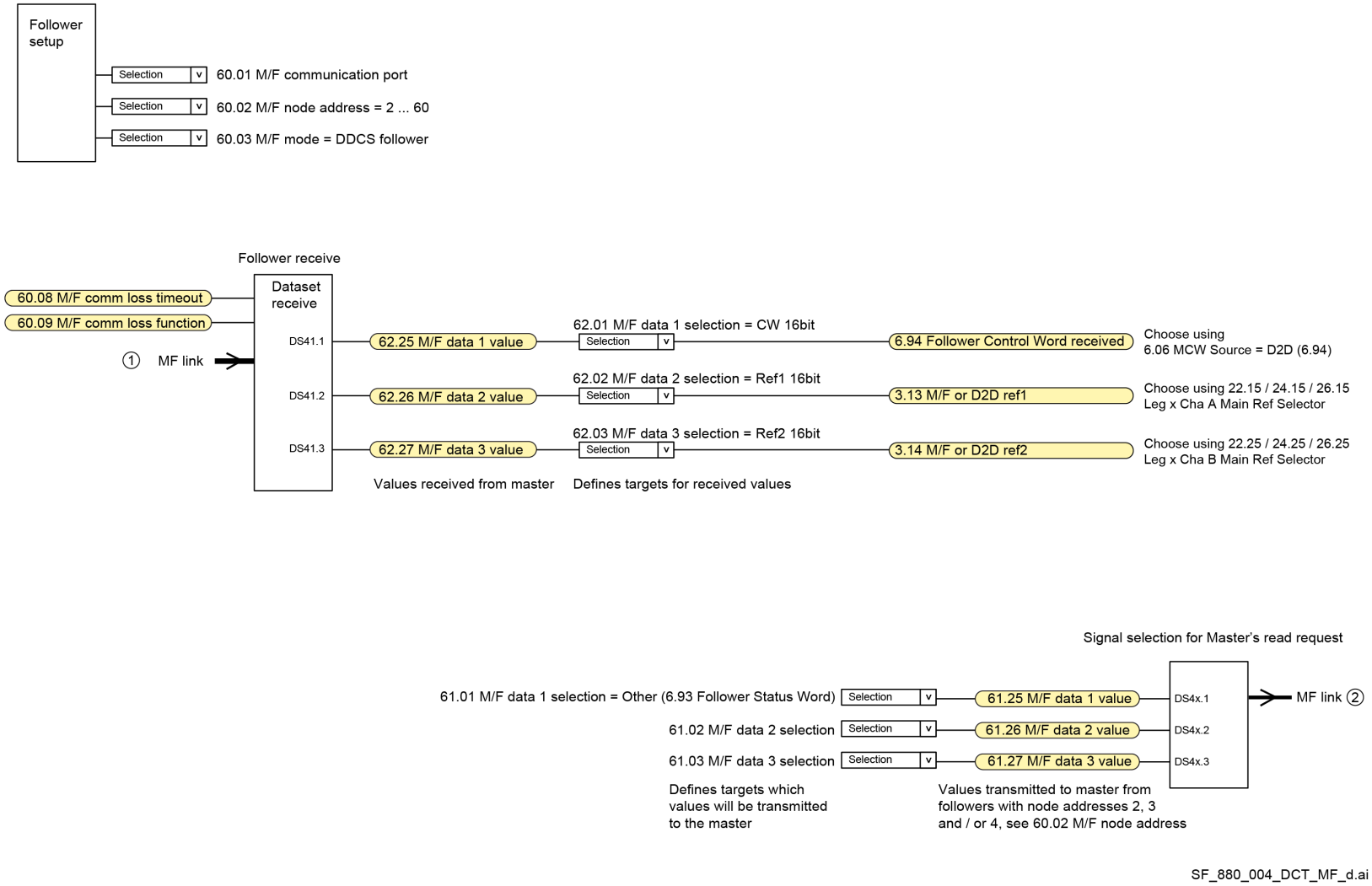

Master - follower communication (Follower)

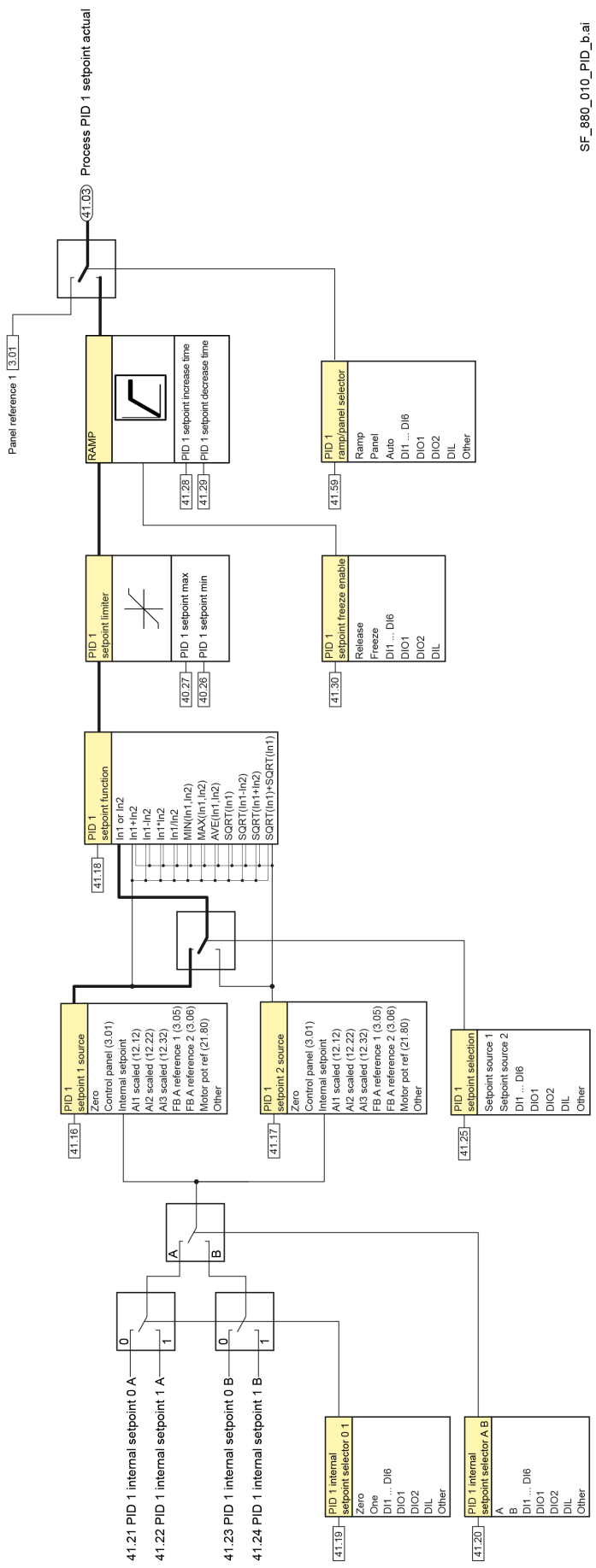

Process PID 1 Setpoint

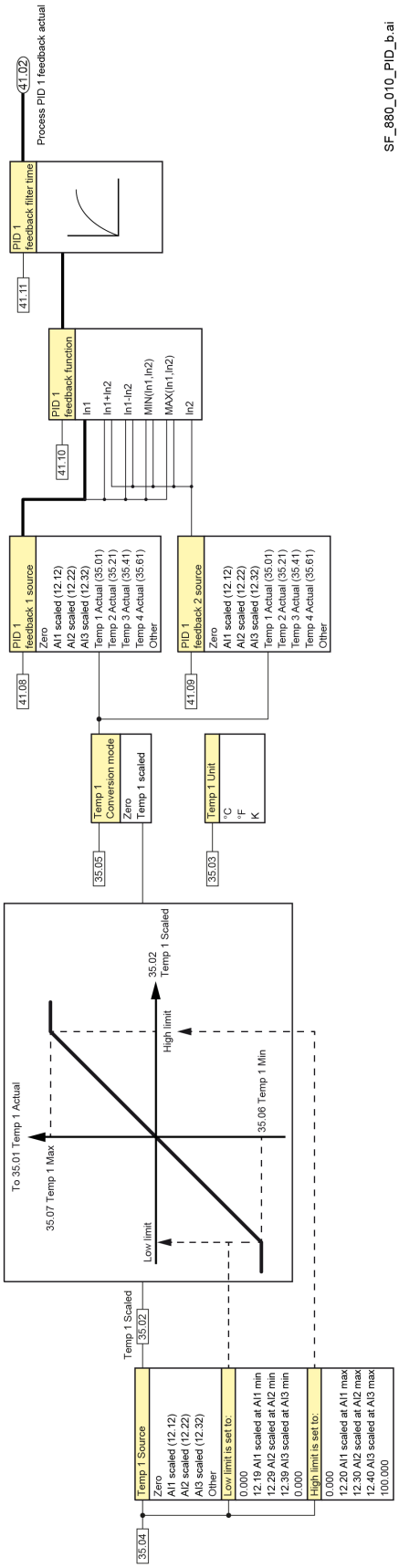

SF_880_010_PID_b.ai

Process PID 1 Feedback

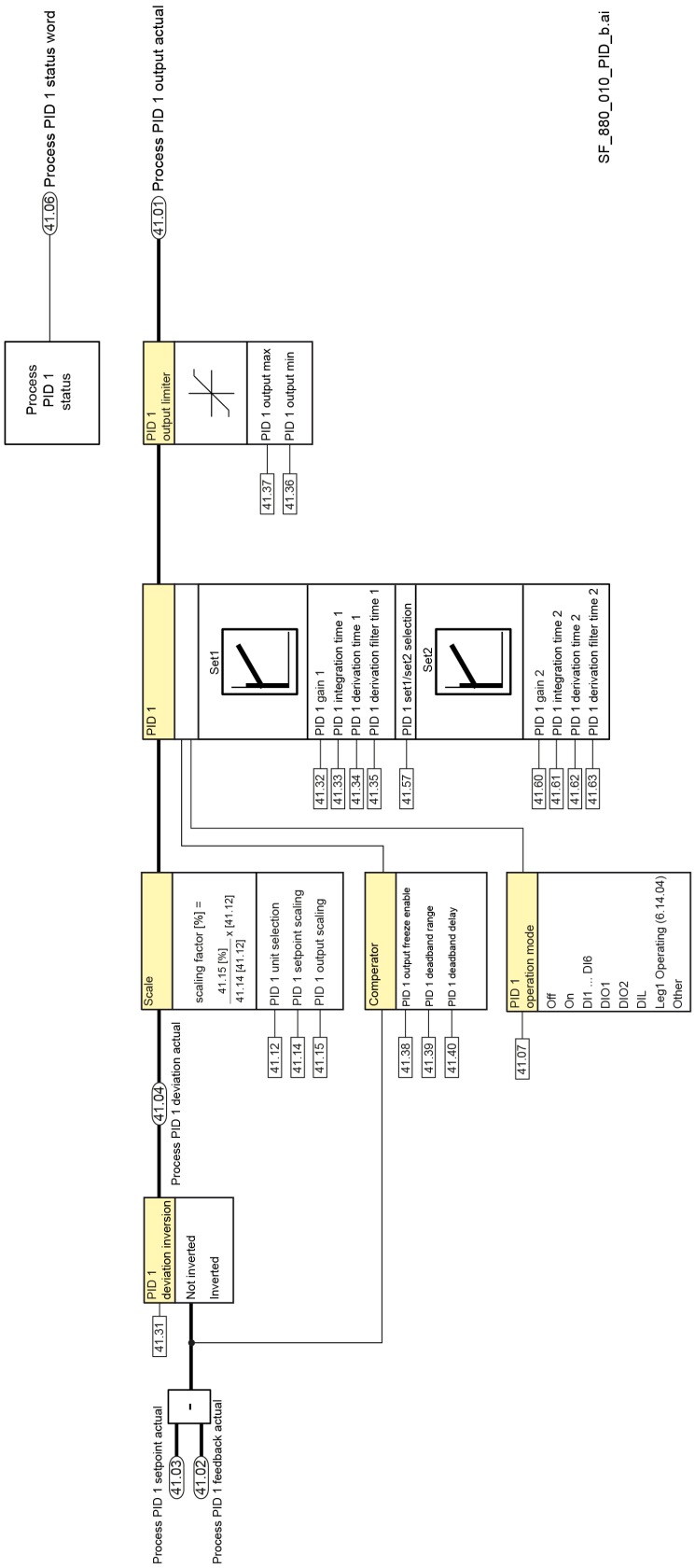

Process PID 1 Output

Revision

Revision	Date	Comments
G	10.2023	Bug fixes. Added units size T6 special design.
H	05.2024	Bug fixes. Added units size T6 standard.
I	02.2025	Bug fixes. Added units size T8.
J		
K		
L		

DCS Family

DCS580 modules
The compact drive for machinery application

20 ... 1,000 A_{DC}
0 ... 610 V_{DC}
230 ... 525 V_{AC}
IP00

- Compact
- Robust design
- Adaptive Programming
- High field exciter current
- Extruder macro

DCS880 modules
For safe productivity

20 ... 5,200 A_{DC}
0 ... 1,500 V_{DC}
230 ... 1,200 V_{AC}
IP00

- Safe torque off (STO) built in as standard
- Compact and robust
- Single drives, 20 A_{DC} to 5,200 A_{DC}, up to 1,500 V_{DC}
- IEC 61131 programmable
- Intuitive control panel and PC tool with USB connection and start up assistant
- Wide range of options to serve any DC motor application

DCS880-A cabinets
Complete drive solutions

20 ... 20,000 A_{DC}
0 ... 1,500 V_{DC}
230 ... 1,200 V_{AC}
IP21 ... IP54

- Suitable for motoric and non motoric applications (e.g. electrolysis & hydrogen production)
- Individually adaptable to customer requirements
- User-defined accessories like external PLC or automation systems can be included
- High power solutions in 6- and 12-pulse up to 20,000 A_{DC}, 1,500 V_{DC}
- In accordance to usual standards
- Individually factory load tested
- Detailed documentation

DCT880 modules
Thyristor power controller

20 ... 4,200 A_{AC}
110 ... 990 V_{AC}
IP00

- Precise power control in industrial heating applications
- Two or three phase devices
- Power optimizer for peak load reduction
- Built on ABB's all-compatible drives architecture
- Intuitive control panel and PC tool with USB connection and start up assistant
- Application control programs and drive application programming with IEC 61131 programming

ABB AG
Kallstadter Straße 1
68309 Mannheim • Germany
Tel: +49 (0) 621 381 0
Mail: dc-drives@de.abb.com
Web: new.abb.com/drives/dc

Ident. No.: 3ADW000431R0901 Rev I
022025