Doc. N.° 1SDH001400R0918 - L9769

# SACE Emax 2

Sportellino MID - E2.2-E4.2-E6.2
MID cover - E2.2-E4.2-E6.2
MID Abdeckung - E2.2-E4.2-E6.2
MID couverture - E2.2-E4.2-E6.2
MID cubierta - E2.2-E4.2-E6.2

E2.2-E4.2-E6.2

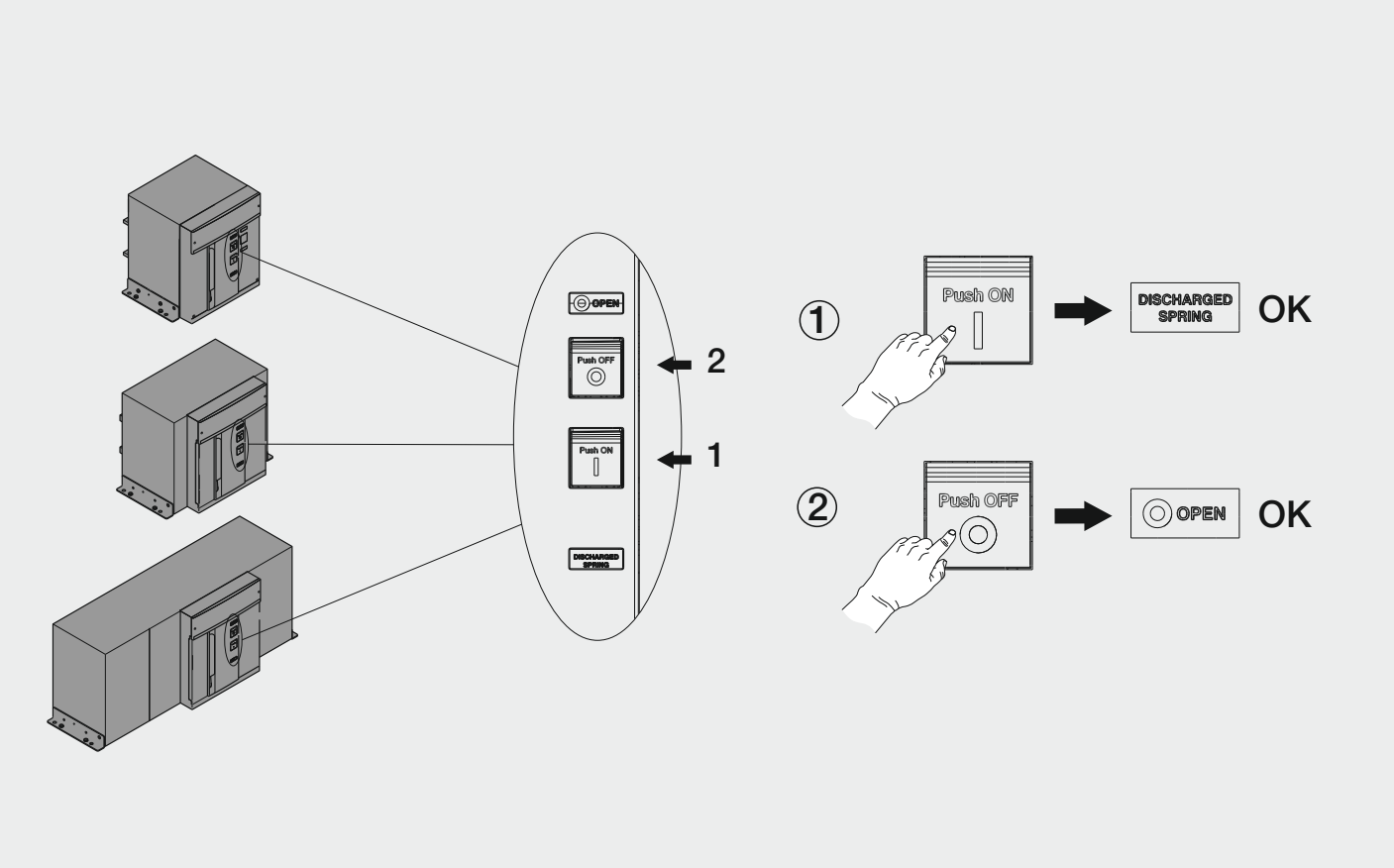


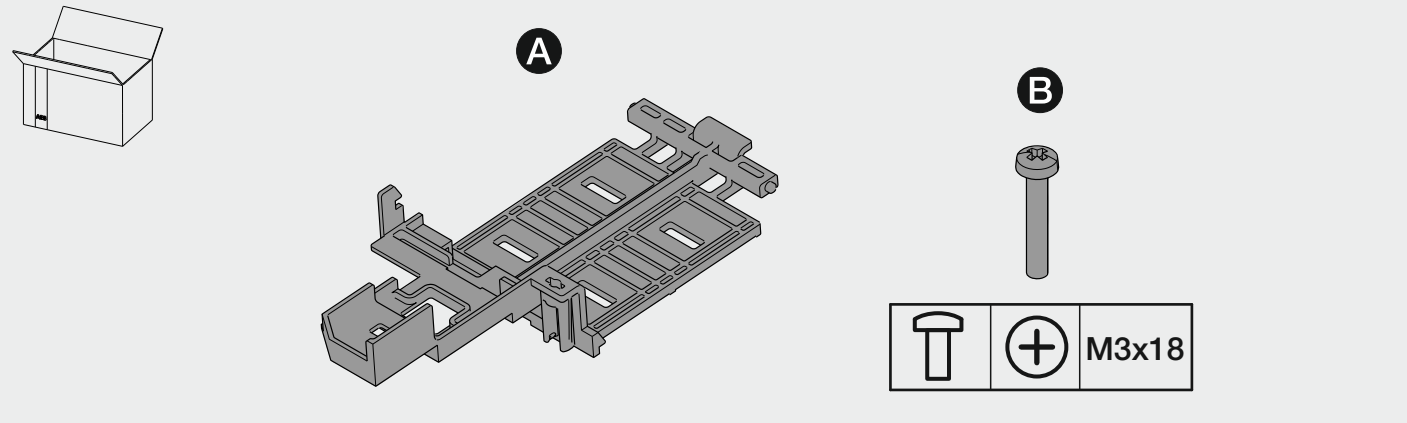


Power and productivity
for a better world™

1

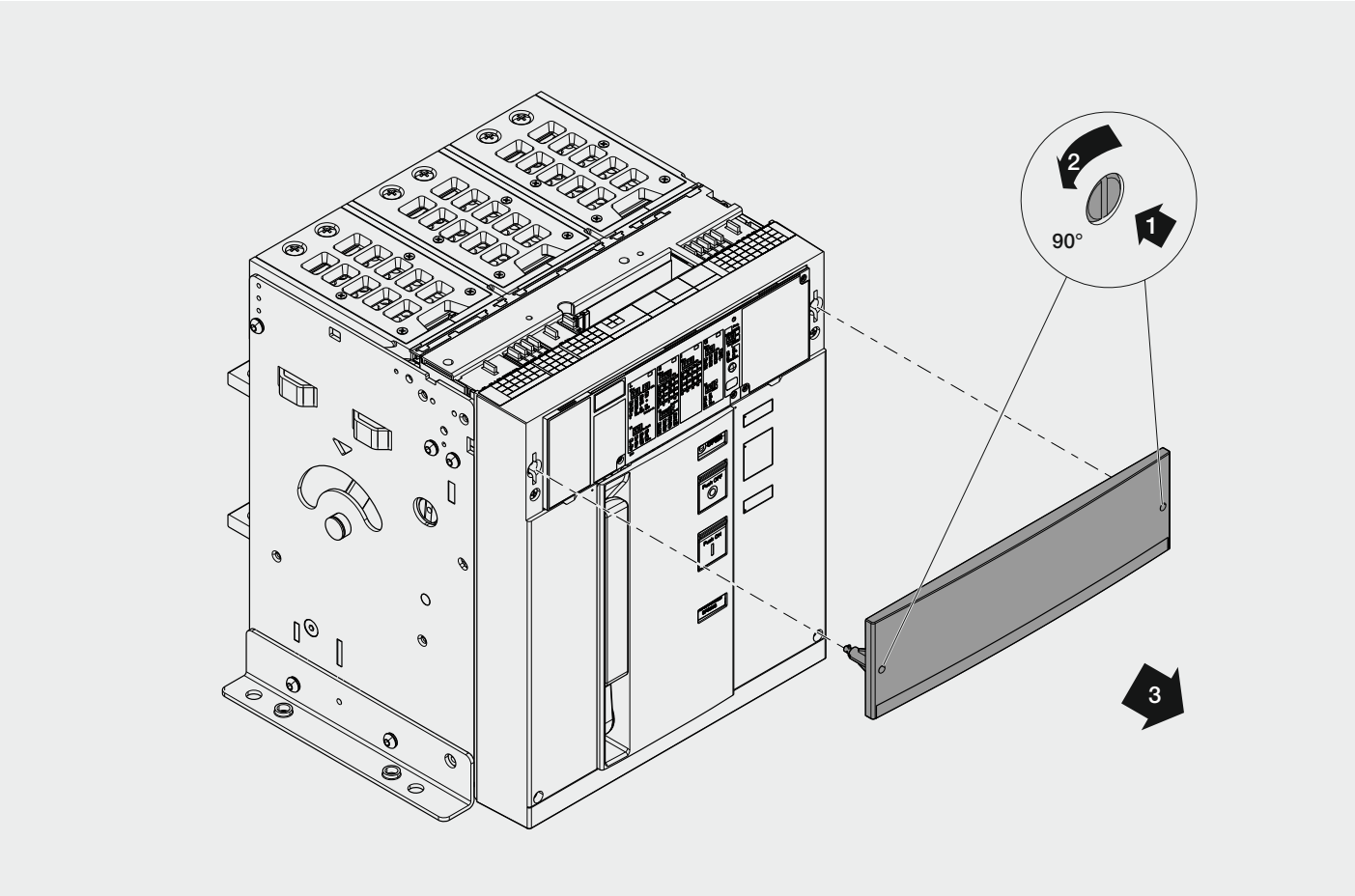


2

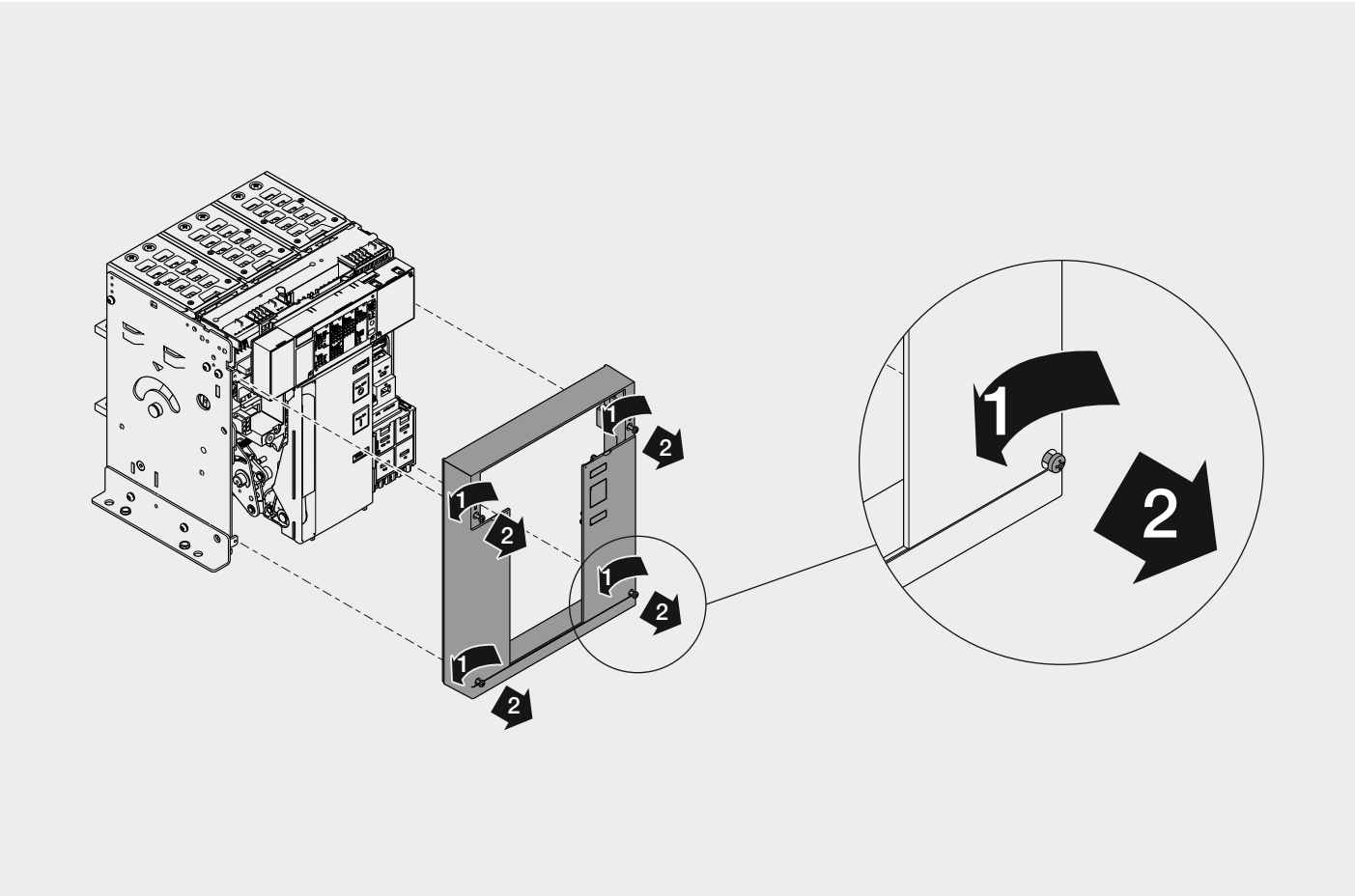

3

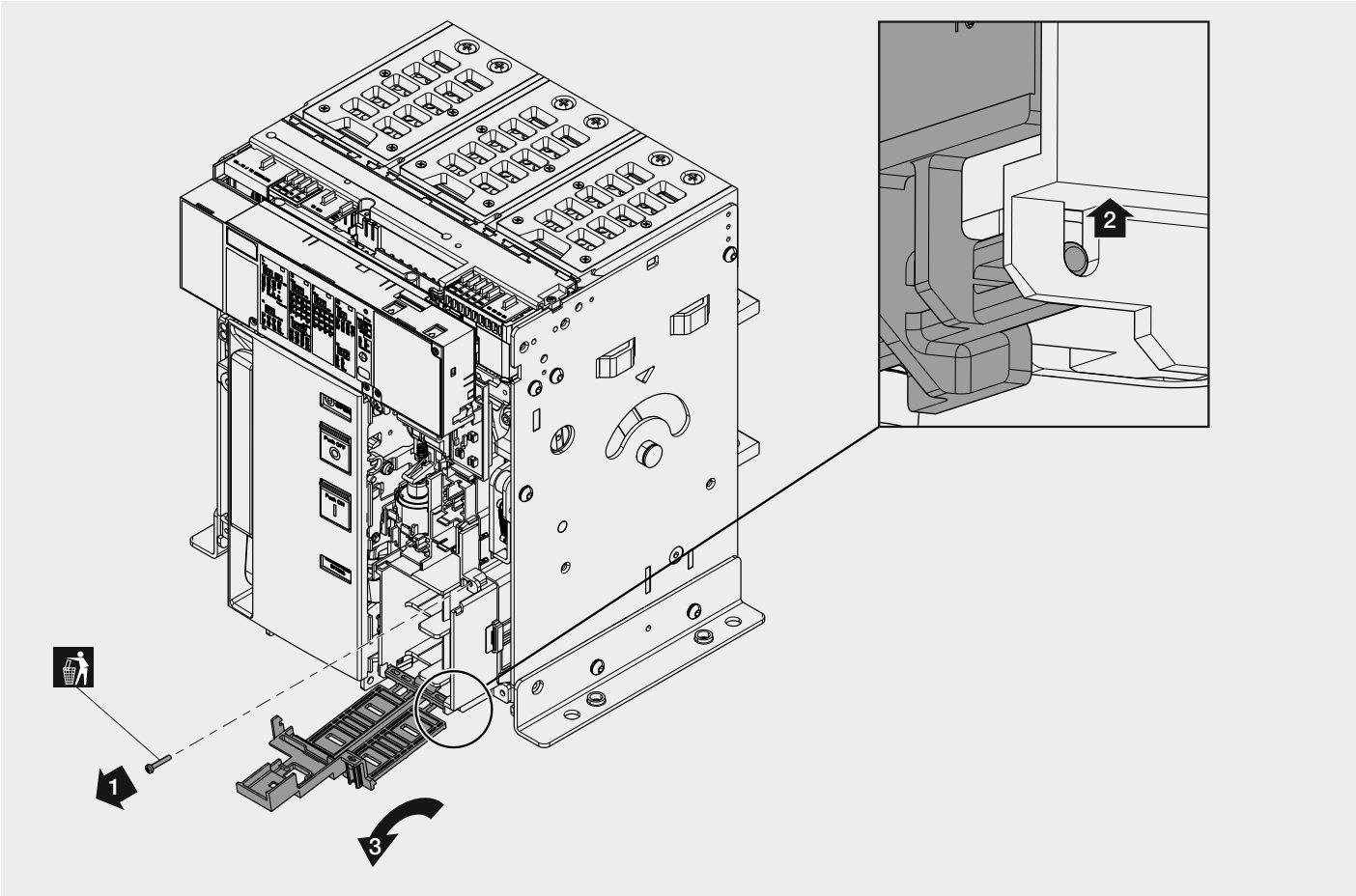


4

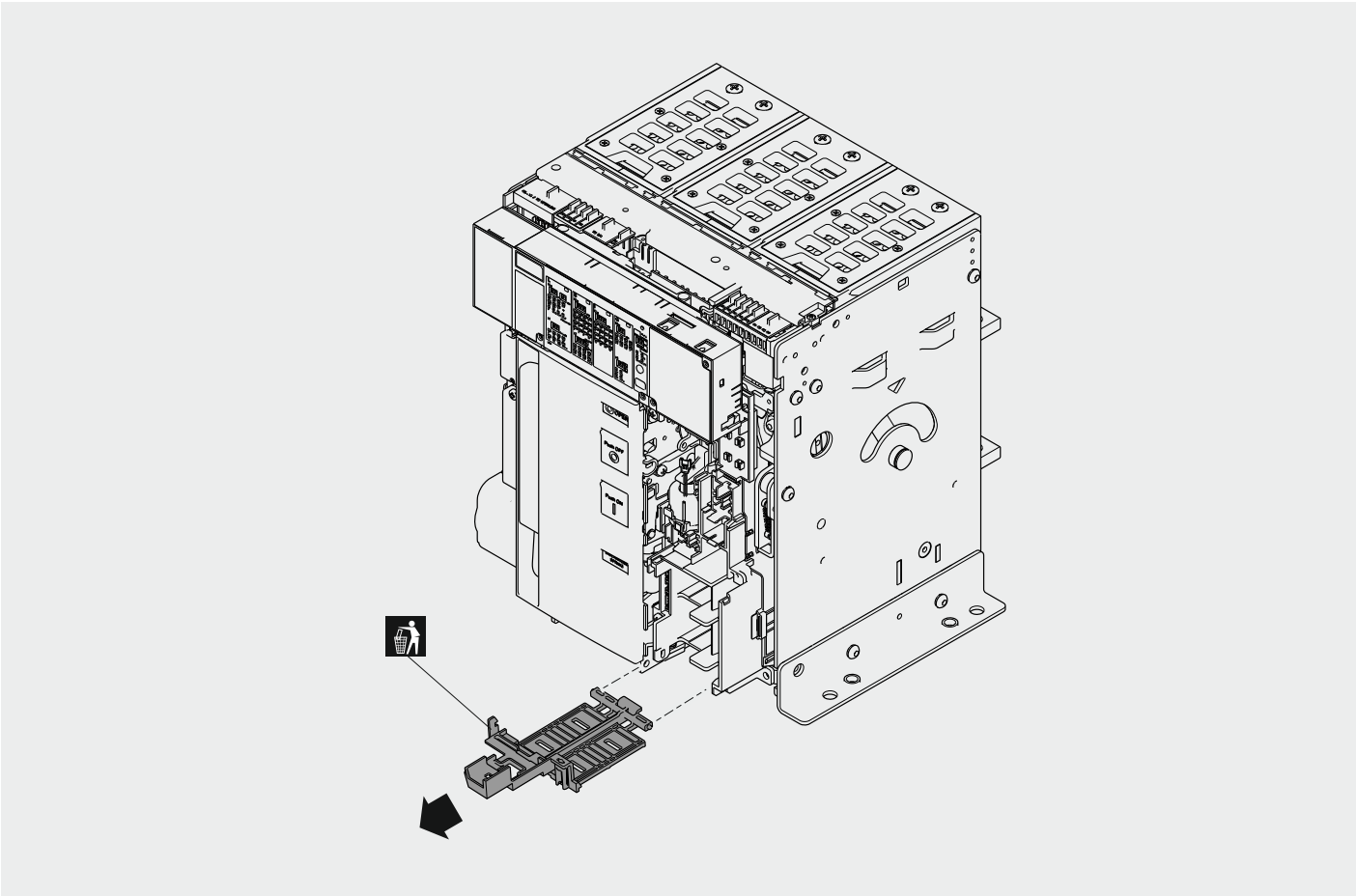

5

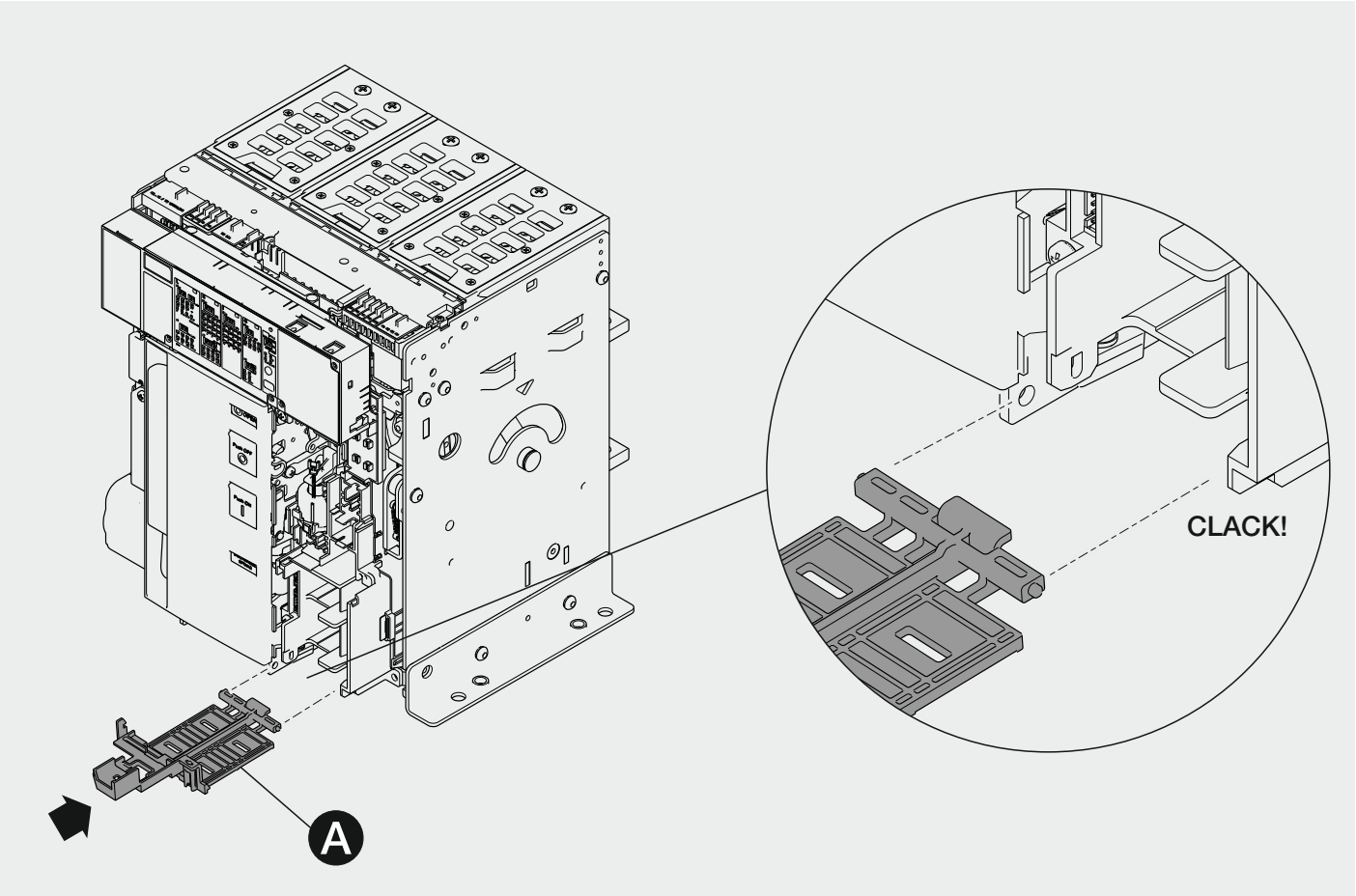


6

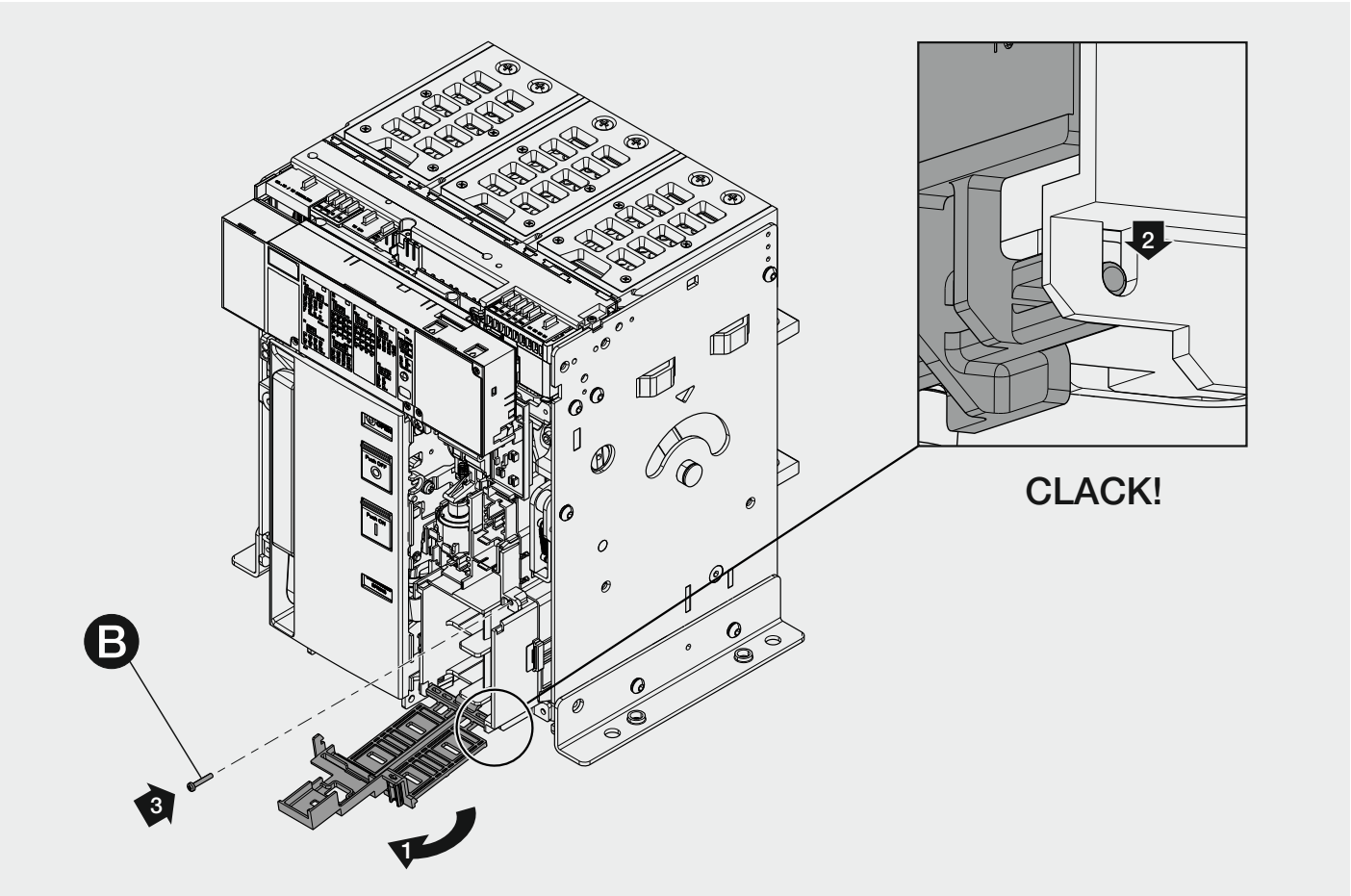

7

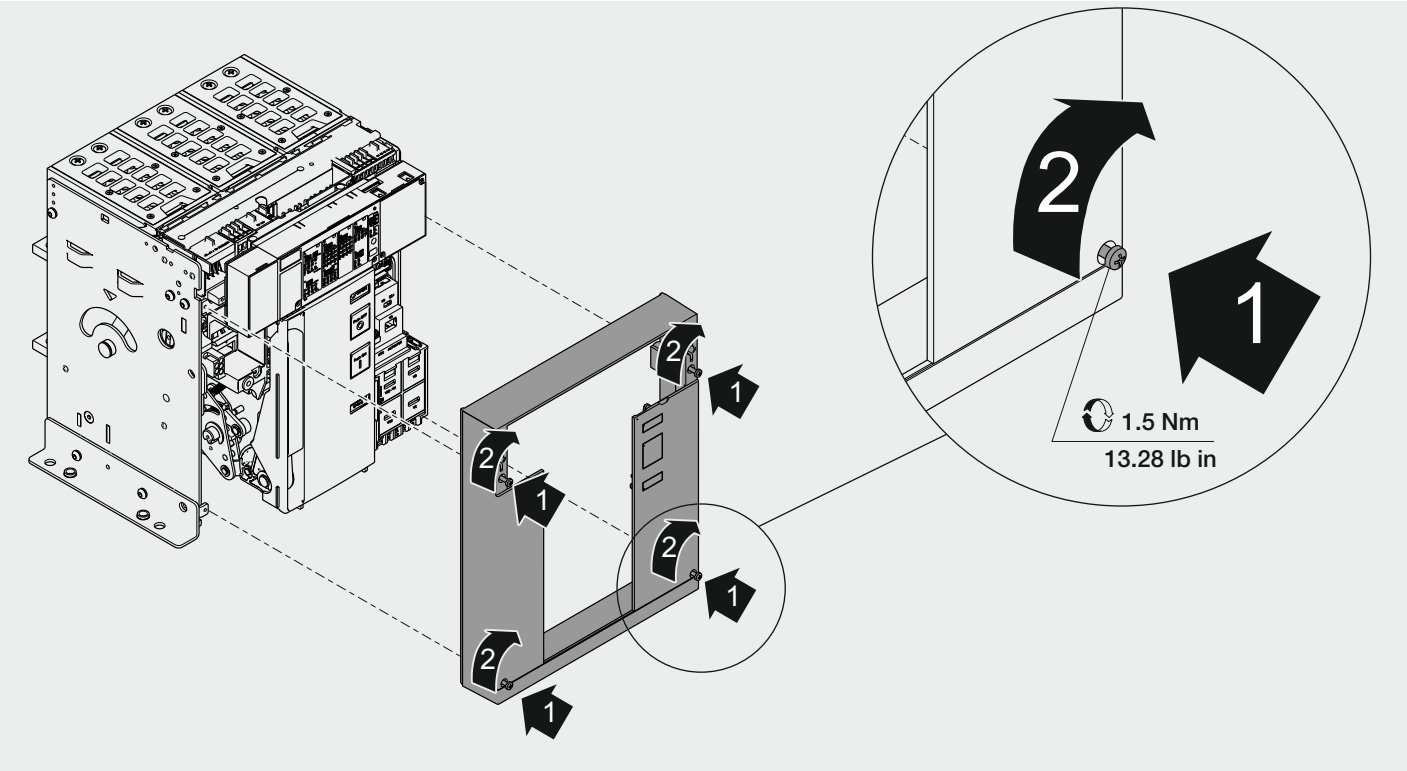


8

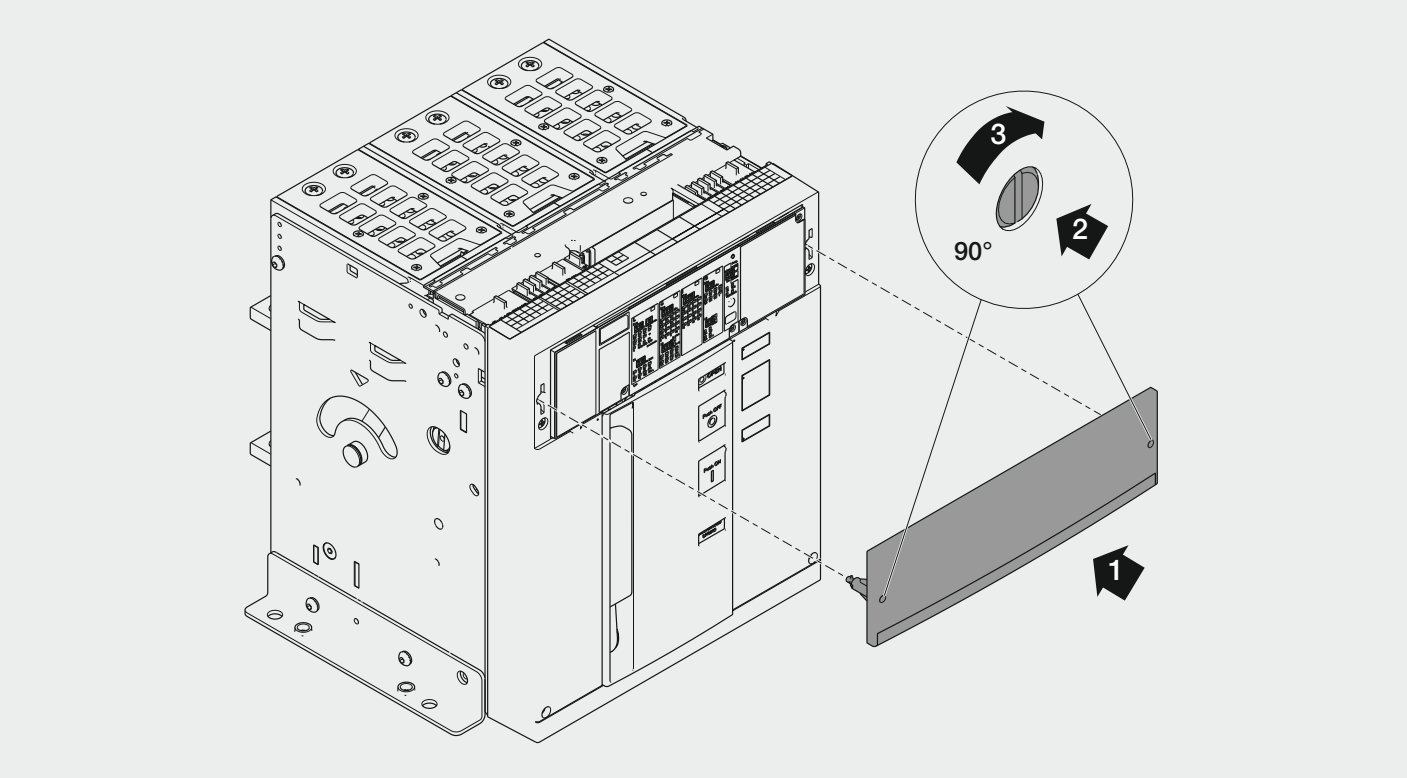


For more information please contact:

ABB S.p.A.
ABB SACE Division
Via Pescaria, 5
24123 Bergamo - Italy
Phone: +39 035 395 111

© Copyright 2014-2015 ABB. All rights reserved.
www.abb.com

Power and productivity
for a better world™