Feeder Protection REF615 ANSI

Protection and Control

IEC 61850-based **Connectivity and Interoperability** for Distribution Substations

Area of application

The REF615 is a powerful and simple feeder protection relay perfectly aligned for the protection, measurement and supervision of utility substations and industrial power systems. Engineered from the ground up, the new feeder protection relay has been designed to unleash the full potential of the IEC 61850 standard for communication and interoperability of substation automation devices.

REF615 provides main protection for overhead lines, cable feeders and busbar systems of distribution substations as well as backup transformer overcurrent protection. The feeder protection relay suits any distribution network, regardless of the applied power system grounding principle.

Protection and control

The feeder protection relay offers time and instantaneous overcurrent, negative sequence overcurrent, phase discontinuity, breaker failure and thermal overload protection. The relay also features optional high impedance fault (HIZ) and sensitive earth fault (SEF) protection for solidly-, impedance- and un-grounded distribution systems. Finally, the relay incorporates a flexible three-phase multi-shot auto-reclose function for automatic feeder restoration in temporary faults on overhead lines.

Enhanced with safety options, the relay offers a three-channel arc-fault detection system for supervision of the switchgear circuit breaker, cable and busbar compartments.

The REF615 also integrates basic control functionality, which facilitates the control of one circuit breaker via the relay's front panel human machine interface (HMI) or remote control system. To protect the relay from unauthorized access and to maintain the integrity of information, the relay has been provided with a four-level, role-based user authentication system, with individual passwords for the viewer, operator, engineer and administrator level. The access control system applies to the front panel HMI, embedded web browser based HMI and the PCM600 relay setting and configuration user tool.

The power of communication

REF615 supports the new IEC 61850 standard for inter-device communication in substations. The relay also supports the industry standard DNP3.0 and Modbus® protocols.

The implementation of the IEC 61850 substation communication standard in REF615 encompasses both vertical and horizontal communication, including GOOSE messaging and parameter setting according to IEC 61850-8-1. The substation configuration language enables the use of engineering tools for automated configuration, commissioning and maintenance of substation devices.

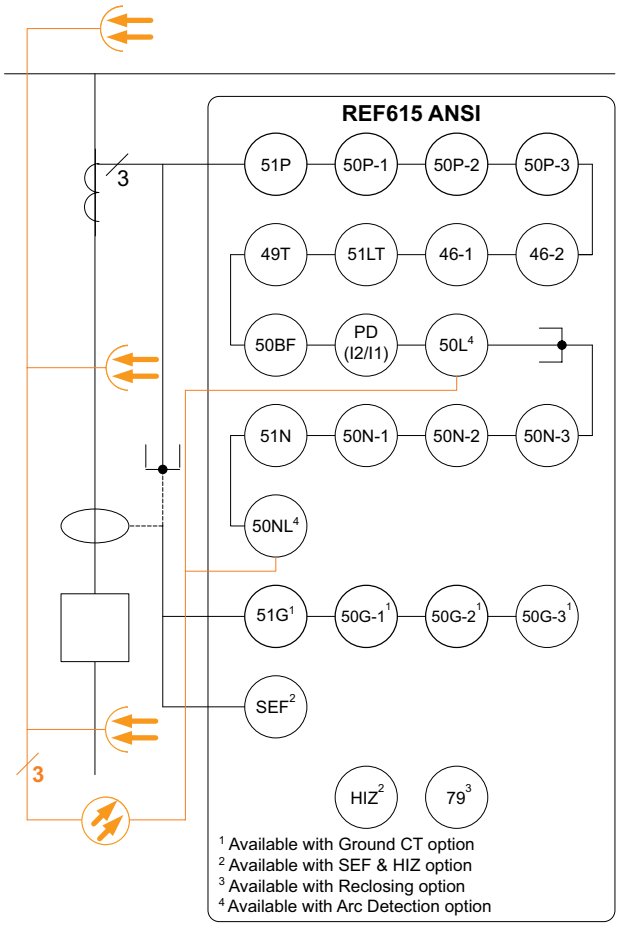

Pre-emptive condition monitoring

For continuous knowledge of the operational availability of the REF615 features, a comprehensive set of monitoring functions to supervise the relay health, the trip circuit and the circuit breaker health is included. The breaker supervision can include monitoring the wear and tear of the circuit breaker, the spring charging time of the breaker operating mechanism and the gas pressure of the breaker chambers. The relay also supervises the breaker travel time and the number of CB operations to provide basic information for scheduling CB maintenance.

Rapid set-up and commissioning

Due to the ready-made adaptation of REF615 for the protection of feeders, the relay can be rapidly set up and commissioned, once it has been given the application-specific relay settings. If the relay needs to be adapted to the special requirements of the intended application, the flexibility of the relay allows the relay's standard signal configuration to be adjusted by means of the signal matrix tool (SMT) included in its PCM600 relay setting and configuration user tool.

By means of Connectivity Packages holding complete descriptions of ABB's protection relays, with data signals, parameters and addresses, the relays can be automatically configured via PCM600 relay setting and configuration user tool and MicroSCADA Pro substation automation system.

Unique Draw-out design relay

The draw-out type relay design speeds up installation and testing of the protection. The factory-tested relay units can be withdrawn from the relay cases during switchgear factory and commissioning tests. The plug-in design also speeds up maintenance work thanks to the easy exchange of relay units.

The relay case provides automatic short-circuiting of the CT secondary circuits to prevent hazardous voltages from arising in the CT circuits when a relay plug-in unit is withdrawn from its case.

The pull-out handle locking the relay unit into its case can be sealed to prevent the unit from being unintentionally withdrawn from the relay case.

REF615 highlights

IEC 61850 COMPLIANT

- Comprehensive overcurrent protection with high impedance fault, sensitive earth fault and thermal overload protection for feeder and dedicated protection schemes
- Simultaneous DN3.0 Level 2+ and Modbus Ethernet communications plus device connectivity and system inter-operability according to the IEC 61850 standard for next generation substation communication
- Enhanced disturbance recorder functionality including high sampling frequency, extended length of records, 8 analog and 32 binary channels and flexible triggering possibilities
- High-speed, three-channel arc-fault protection for increased personal safety, reduced material damage and minimized system down-time
- Total control of the operational capability of the protection system through extensive condition monitoring of the relay and the associated primary equipment
- Draw-out type relay unit and a unique relay case design for a variety of mounting methods and fast installation, routine testing and maintenance
- One single tool for managing relay settings, signal configuration and disturbance handling

REF615 Technology Summary

Technical details are available in the REF615 Product Guide 1VAD386601-AG

Standard Configurations

		Analog Inputs	3 CT	3 CT + Ground CT	3 CT + SEF CT
		Order Code	AA	AB	AC
Protection	**ANSI**				
Phase overcurrent protection, 4 elements	51P, 50P-1, 50P-2, 50P-3		•	•	•
Long time phase overcurrent	51LT		•	•	•
Neutral overcurrent protection, 4 elements	51N, 50N-1, 50N-2, 50N-3		•	•	•
Ground overcurrent protection, 4 elements	51G, 50G-1, 50G-2, 50G-3			o	
Sensitive earth fault protection	SEF				o
Negative sequence overcurrent, 2 elements	46-1, 46-2		•	•	•
High impedance fault protection	HIZ				o
Thermal overload	49T		•	•	•
Phase discontinuity	PD (I2/I1)		•	•	•
Cold load inrush detection	INR		•	•	•
Circuit breaker failure	50BF		•	•	•
Lockout function	86		•	•	•
ARC protection via three lens sensors	ARC		o	o	o
Control					
Circuit breaker control	52		•	•	•
Autoreclose	79		o	o	o
Monitoring and Supervision					
Circuit breaker condition monitoring			•	•	•
Trip circuit supervision	TCS		•	•	•
Measurement					
Three-phase currents			•	•	•
Neutral current			•	•	•
Ground current				o	
Sequence components			•	•	•
Demand phase currents			•	•	•
Maximum demand phase currents			•	•	•
Automation & Communications					
10/100BaseT Ethernet (RJ45): Supports DNP3.0 Level 2+, Modbus and IEC61850			o	o	o
100BaseFL Ethernet (LC): Supports DNP3.0 Level 2+, Modbus and IEC61850			o	o	o
Records					
Sequence of events (SOE) recorder			•	•	•
Fault recorder			•	•	•
Disturbance (waveform) recorder			•	•	•

• = Included,
o = Optional

Analog inputs
Currents: 5/1 A or 1/0.2 A programmable
Rated frequency: 60/50 Hz programmable

Binary inputs and outputs
Four binary inputs with common ground
Two NO double pole outputs with TCS
Two NO single pole outputs
Two change over signal outputs
One Form C signal output for self-check alarm
Additional seven binary inputs plus three binary outputs (available as an option)

Communication
IEC 61850-8-1 with GOOSE messaging
DNP3.0 over TCP/IP
Modbus over TCP/IP
Time synchronization via SNTP (primary and backup servers)

Control voltage
Variant 1: 48 ... 250 V dc, 100 … 240 V ac
Variant 2: 24 ... 60 V dc

Product Dimensions and Weight
7” - 4U (177 mm) height, 7” - 4U (177 mm)width, 7.5” (191 mm) depth, 7.72 lbs. (3.5 kg)

Tools
Protection and Control IED Manager PCM600 ver. 2.0 for setting, signal configuration and disturbance handling
Web browser based user interface (IE 7.0 or later)

ABB Inc.
Distribution Automation
7036 Snowdrift Road Suite 2
Allentown, PA USA
Phone: +1 610 395-7333
Fax: +1 610 395-1055
www.abb.com/substationautomation

12 YEAR WARRANTY RELAYS

1VAD386601-FL Rev. C March 2008
© Copyright 2007, 2008 ABB. All rights reserved.