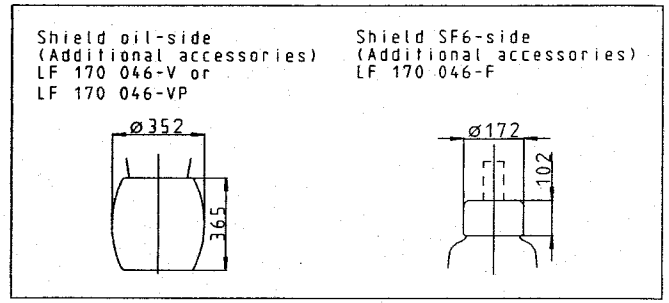

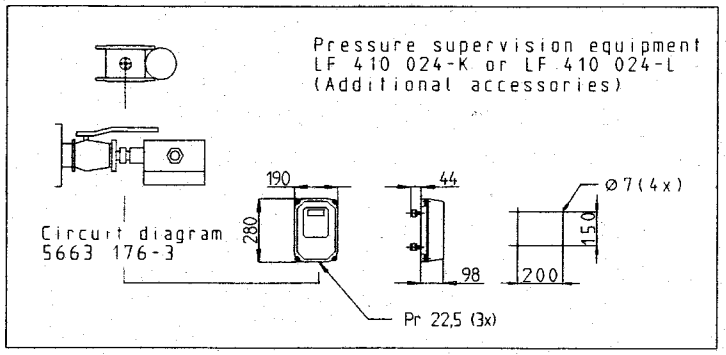

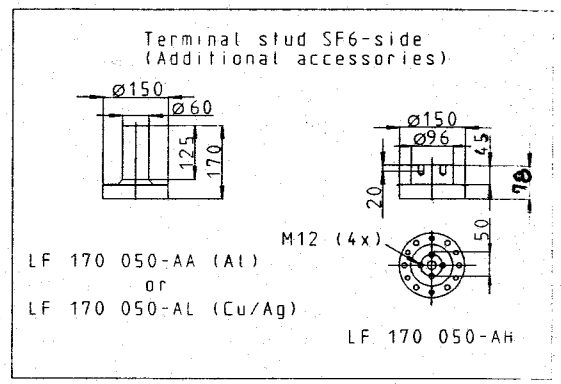

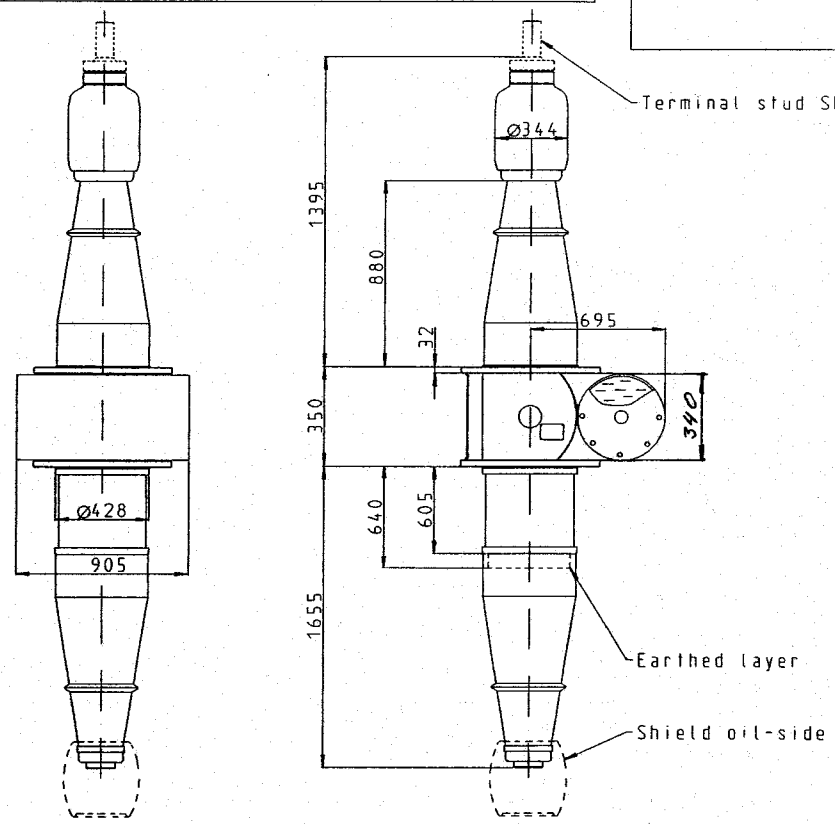

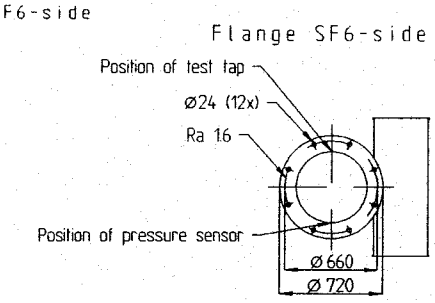

Electrical data		
Ratings	Rated voltage	550 kV
	Max phase to ground	318 kV
	Rated current Vertical	2500 A
	Rated current Horizontal	1600 A
Test voltages	Lighting impulse	1675 kV
	Switching impulse	1300 kV
Routine test	Power frequency	750 kV

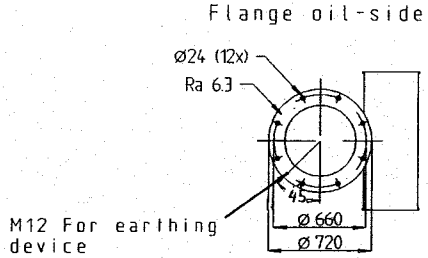

ABB Components AB		
Bushing GOEK 1675		
No.	Horiz 1600 A	
Un/Uy 550/318 kV	Vert.2500 A	
Test LI/SI/AC 1675/1300/750 kV		
Year	L 1655 mm	M 575 kg
PF	%C1/C2	pF

Catalogue number: LF 124 013-C

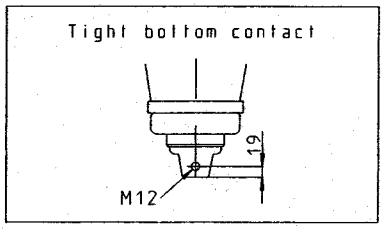

Accepted by qual	Accepted for prod by	Description (English) GOEK 1675 FE=600	DATAORIGINAL
Design checked by Heyman	Drawn by Andersson	Description (own language)	File name
Drawing checked by Jonsson	Issued by Year Week COM/BK 94 31	2753 015-35	Lang / Sheet 1
ABB ABB Components			Rev / Cont

Rev Ind	Revision	Appd	Year	Week
1	340 added		99	41

Drawn by | Form No. | Design checked by | Dept | Year | Sheet | Cont

We reserve all rights in this document and in the information contained therein. Reproduction, use or disclosure to third parties without express authority is strictly forbidden. © ABB 19