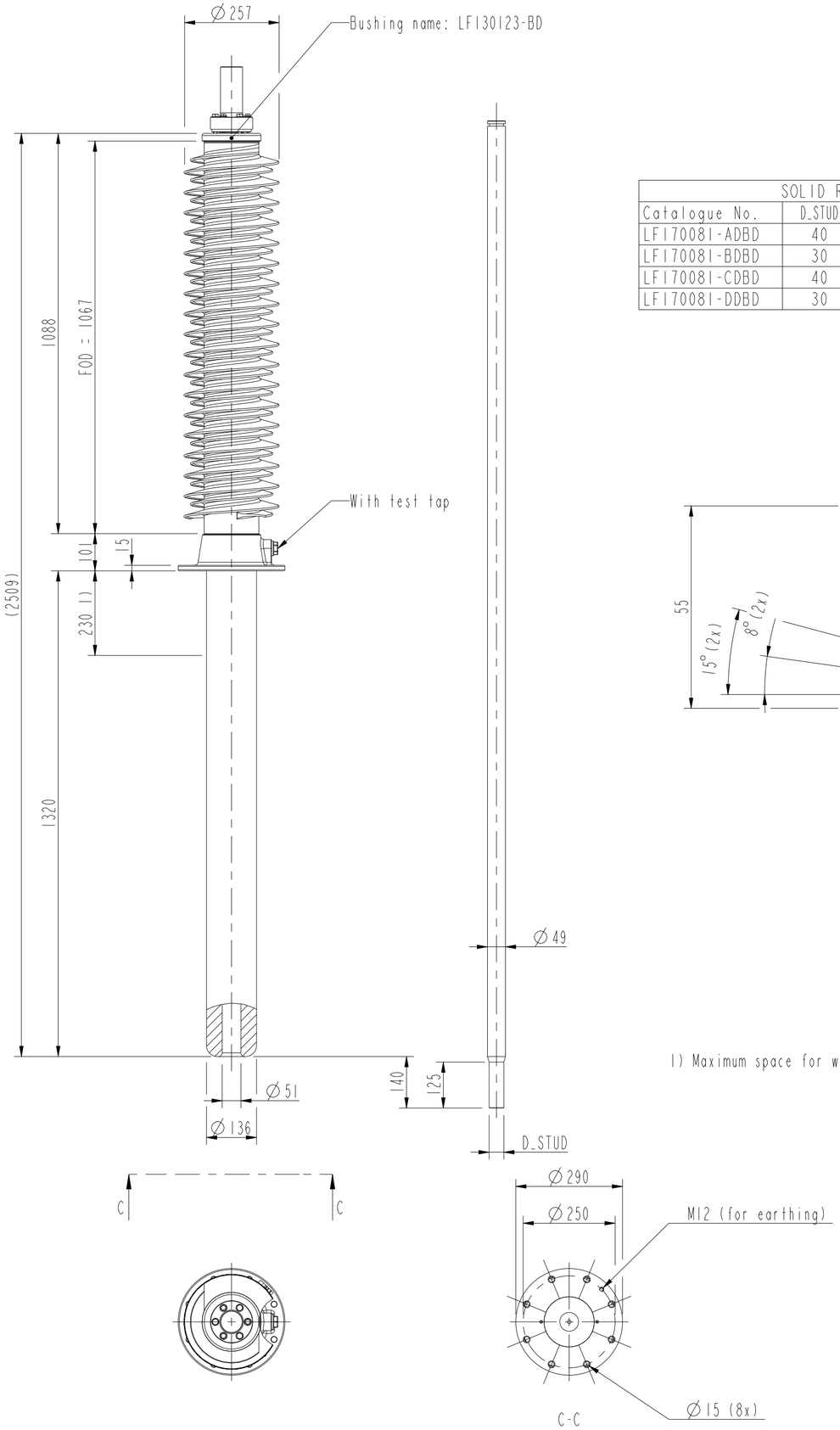

SOLID ROD			
Catalogue No.	D_STUD	MASS	MATERIAL
LF170081-ADBD	40	44,6	Cu
LF170081-BDBD	30	43,9	Cu
LF170081-CDBD	40	44,6	Al
LF170081-DDBD	30	43,9	Al

OUTER TERMINAL				
Catalogue No.	D_STUD	H2	MASS	MATERIAL
LF170079-A	60	125	2,3	AL
LF170079-B	30	125	1,5	AL
LF170079-C	60	125	6,1	CU
LF170079-D	30	125	3,5	CU
LF170079-E	60	125	6,1	CU/SN
LF170079-F	30	125	3,5	CU/SN
LF170079-G	60	125	6,1	CU/AG
LF170079-H	30	125	3,5	CU/AG

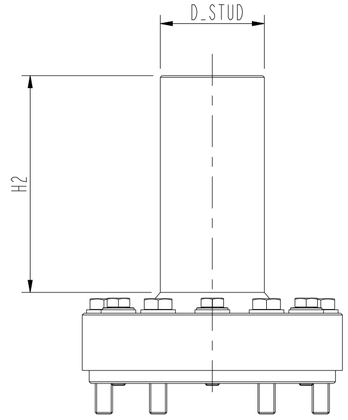

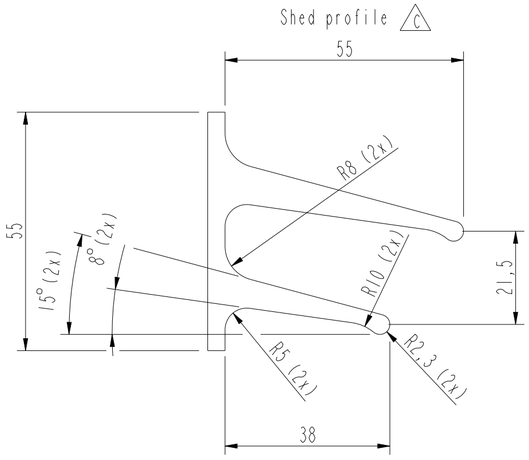

1) Maximum space for wall and CT.

ELECTRICAL DATA acc. to IEC 60137			
Ratings	Rated voltage	170	kV
	Max. phase to earth voltage, temporary	170	kV
	Max. current with Cu-conductor	2000	A
	Max. current with Al-conductor	1250	A
	Dry lightning impulse	550	kV
	Wet power frequency	230	kV
Routine test	Dry power frequency	230	kV
Capacitance	Nominal capacitance	426	pF

GENERAL DATA			
Silicone rubber insulator	Creepage distance	3913	mm
	Protected creepage distance	1700	mm
	Color	Light gray	ANSI 70
Mass	Mass bushing	62	kg
Cantilever load	Cantilever test load, heavy load outdoor	5000	N
	Max. cantilever operating load, bushing	2500	N
Temp. class	According to IEC 60137	Class	3
Mounting and service instructions		2750515-133	

ELECTRICAL DATA acc. to ANSI C57.19.00			
Ratings	Insulation class, AC	115	kV
	Rated max. line to ground voltage, AC	88	kV
	Max. current with Cu-conductor	2000	A
	Max. current with Al-conductor	1250	A

Dim. requirements acc. to C57.19.1 not fulfilled

ABB Ludvika, Sweden

GSA 123-AA/2000 LF130123-BD
No.
Um 170 kV Ir 2000 A 50/60 Hz
BIL 550 kV SIL - kV AC 230 kV
M 62 kg L 1320 mm ⊥ 0-90°
C1 pF Tan δ %
C2 pF Tan δ %

Prepared: Leif Roosgårdh 2016-11-10	Responsible department: PGCO/BK	Title: Bushing GSA 123-AA/2000	
Modified by: Leif Roosgårdh 2016-11-30	Take over department		
Approved by: Johan X Eriksson 2016-11-30	Used in product	Genomföring GSA 123-AA/2000	Language: 82
Revision: C Shed profile updated.		Order	Sheet no.: 1
ABB		Document no.: 2751362-DBD	No. Shts.: (1)

This document is issued by means of a computerized system. The digitally stored original is electronically approved. The approved document has a date entered in the "Approved"-field. A manual signature is not required.

The information contained in this document has to kept strictly confidential. Any unauthorized use, reproduction, distribution or disclosure to third parties are strictly forbidden. ABB reserves all rights regarding Intellectual Property Rights. © Copyright 2013 ABB. All rights reserved.

(A2)