Table of contents

1/2x19"

Rear view slot

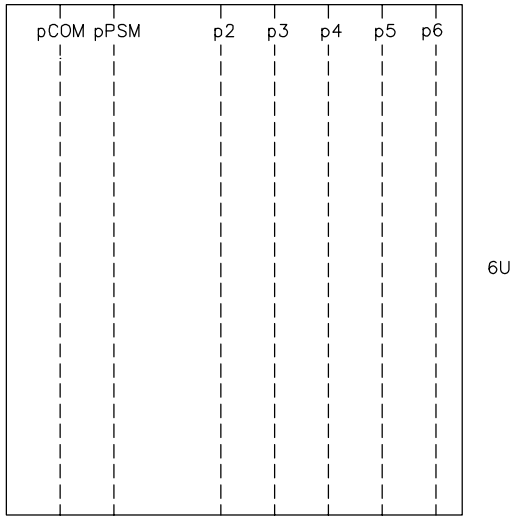

p= Position

Rear view terminal

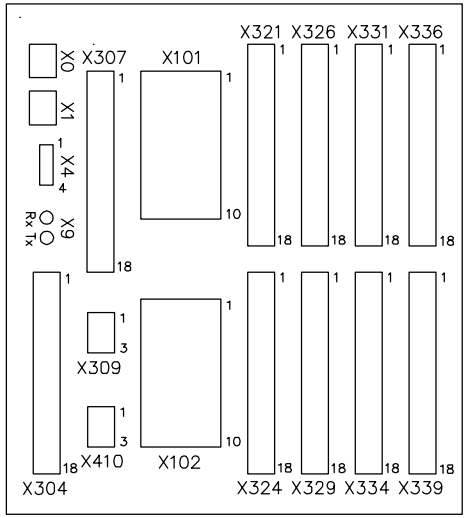

Designation for 6U, 1/2x19" casing with 1 TRM

Module	Slot	Terminal
COM	pCOM	X0, X1, X4, X9, X304
PSM	pPSM	X307. X309, X410
TRM	p2	X101, X102
BIO	p3	X321, X324
BIO	p4	X326, X329
BIO	p5	X331, X334
BIO	p6	X336, X339

Based on	Prepared 2010-05-12	Agneta Rydh	Title Connection Diagram REL650 (3Ph/1CB) A05A ANSI symbols
	Approved 2011-12-08	Patrik Nyback	
	Project		

Rev	Rev. Note	Date	Name

ABB AB

Doc.des.	
Doc.kind	
Resp.dept.	PSTP/TPLA
Rev.ind.	C
Lang.	en
Doc.No.	1MRK006502-TB
Sheet	2
Cont.	3

Ref.des.

Communication module (COM)

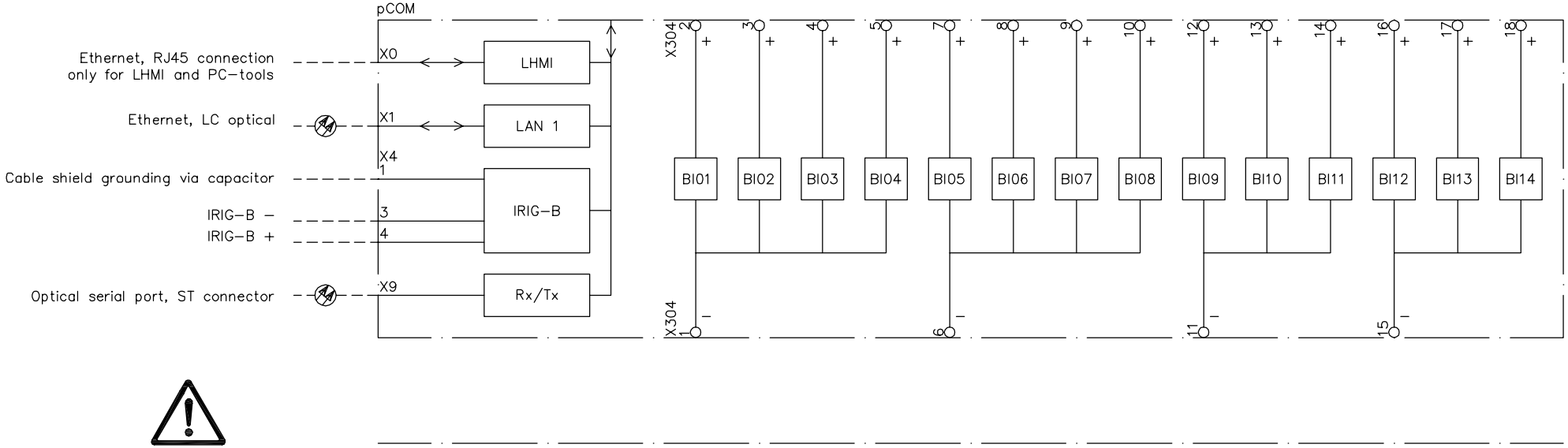

Observe polarity sequence

Configuration plant adapted

BI01	ZCOM_CR
BI02	ZCOM_CRG
BI03	GND_CR
BI04	LINE_DTTR
BI05	EXT_TRIP
BI06	79_ON
BI07	79_OFF
BI08	79_RST
BI09	79_EXT_RI
BI10	79_EXT_BLK
BI11	SYNC1_VT_OK
BI12	SYNC2_VT_OK
BI13	LINE_VT_OK
BI14	SPARE

Based on	Prepared 2010-08-03	Agneta Rydh	Title Connection Diagram REL650 (3Ph/1CB) A05A ANSI symbols
	Approved 2011-12-08	Patrik Nyback	
	Project		
Rev / Rev. Note / Date / Name			ABB AB

Doc.des.	Doc.kind	Ref.des.	
Resp.dept.	PSTP/TPLA	Rev.ind. C	Lang. en
Doc.No. 1MRK006502-TB			Sheet 3
			Cont. 4

Power supply module 48–125 VDC (PSM)

pPSM

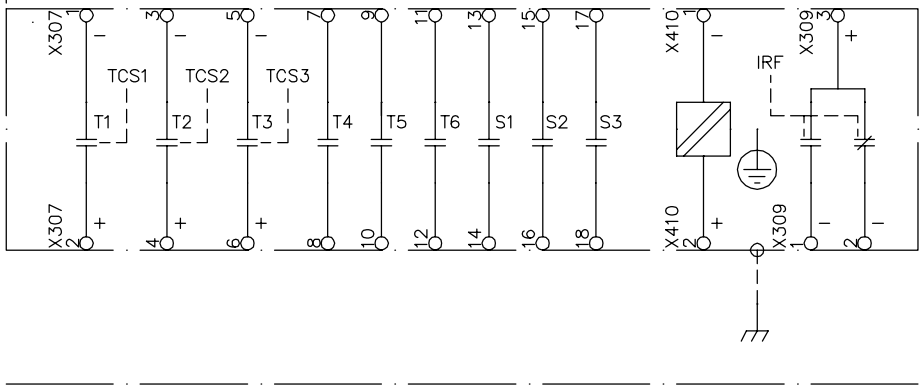

Observe polarity sequence

Configuration plant adapted

T1	TRIP
T2	SPARE
T3	SPARE
T4	CLOSE
T5	79_RI
T6	SPARE
S1	TCS_ALARMS
S2	BKR_ALARMS
S3	79_INPROG
Auxiliary supply EL	
Protective earth	
Normal	
Fail	

Based on	Prepared 2010-08-08	Agneta Rydh	Title Connection Diagram REL650 (3Ph/1CB) A05A ANSI symbols
	Approved 2011-12-08	Patrik Nyback	
	Project		
Rev / Rev. Note / Date / Name			ABB AB

Doc.des.	Doc.kind
Resp.dept.	PSTP/TPLA
Rev.ind.	C
Lang.	en
Doc.No.	1MRK006502-TB
Sheet	4
Cont.	5
Ref.des.	

Power supply module 110–250 VDC, 100–240 VAC (PSM)

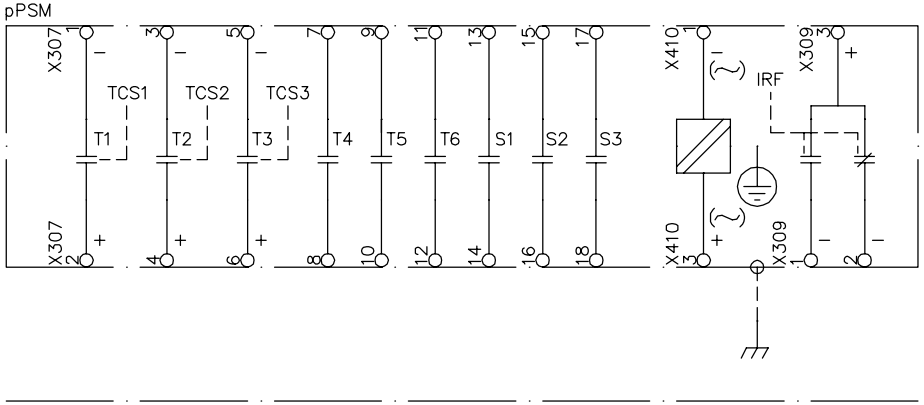

Observe polarity sequence

Configuration plant adapted

T1	TRIP
T2	SPARE
T3	SPARE
T4	CLOSE
T5	79_RI
T6	SPARE
S1	TCS_ALARMS
S2	BKR_ALARMS
S3	79_INPROG
Auxiliary supply EL	
Protective earth	
Normal	
Fail	

Based on	Prepared 2010-08-08	Agneta Rydh	Title Connection Diagram REL650 (3Ph/1CB) A05A ANSI symbols
	Approved 2011-12-08	Patrik Nyback	
	Project		
Rev / Rev. Note / Date / Name			ABB AB

Doc.des.	Doc.kind
Resp.dept.	PSTP/TPLA
Ref.des.	
Rev.ind.	C
Lang.	en
Doc.No.	1MRK006502-TB
Sheet	5
Cont.	6

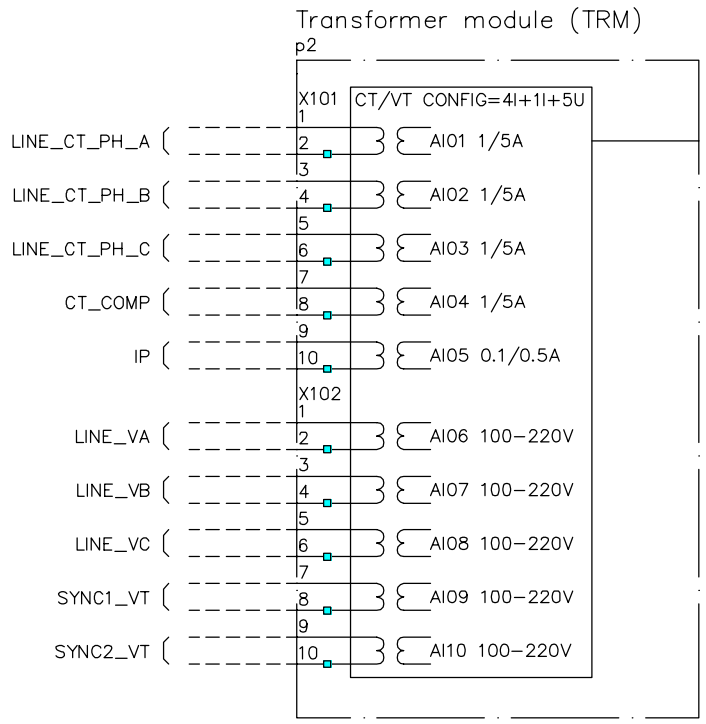

Compression or ringlug terminals

■ Indicates polarity mark. Note that internal polarity can be adjusted by setting of analog input CT neutral direction and or on SMAI pre–processing function blocks.

Based on	Prepared 2010–08–04 Agneta Rydh	Title Connection Diagram REL650 (3Ph/1CB) A05A ANSI symbols	Doc.des. Doc.kind
	Approved 2011–12–08 Patrik Nyback		Ref.des.
	Project		Resp.dept. PSTP/TPLA Rev.ind. C Lang. en
Rev Rev. Note Date Name		ABB AB	Doc.No. 1MRK006502–TB Sheet 6 Cont. 7

Binary input/output module (BIO)

p3

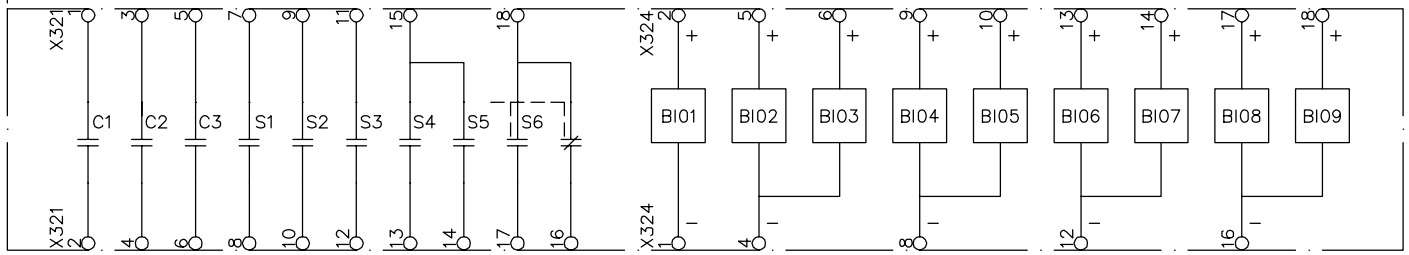

Observe polarity sequence

Configuration plant adapted

C1	SPARE
C2	SPARE
C3	SPARE
S1	PICKUP_PH_A
S2	PICKUP_PH_B
S3	PICKUP_PH_C
S4	PICKUP_21
S5	PICKUP_OC
S6	PICKUP_GND
BI01	BKR1_52a
BI02	BKR1_52b
BI03	SPARE
BI04	BKR1_SPRNG_CH
BI05	BKR1_SF6_LOW
BI06	BKR1_MAN_CLS
BI07	EXT_TRIP_RI
BI08	STB_RELEASE
BI09	ACTV_TESTMODE

Based on	Prepared 2010-08-08	Agneta Rydh	Title Connection Diagram REL650 (3Ph/1CB) A05A ANSI symbols
	Approved 2011-12-08	Patrik Nyback	
	Project		

Rev	Rev. Note	Date	Name

ABB AB

Doc.des.	Doc.kind	Ref.des.	
Resp.dept.	PSTP/TPLA	Rev.ind. C	Lang. en
Doc.No. 1MRK006502-TB			Sheet 7
			Cont. 8

Binary input/output module (BIO)

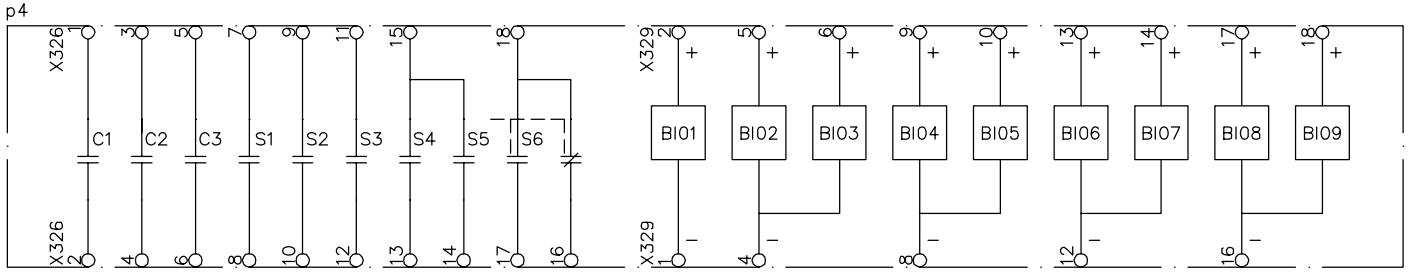

Observe polarity sequence

Configuration plant adapted

C1	SPARE
C2	SPARE
C3	ZCOM_CS
S1	GF_CS
S2	FF_BLK_Z
S3	FF_BLK_V
S4	50BF_TRIP
S5	AUTO_25_OK
S6	MAN_25_OK
BI01	EXT_50BFI
BI02	SPARE
BI03	EXT_LOV
BI04	989_52b
BI05	THL_RESET
BI06	189_52a
BI07	189_52b
BI08	289_52a
BI09	289_52b

Based on	Prepared 2010-08-08	Agneta Rydh	Title Connection Diagram REL650 (3Ph/1CB) A05A ANSI symbols
	Approved 2011-12-08	Patrik Nyback	
	Project		
Rev / Rev. Note / Date / Name			ABB AB

Doc.des.	Ref.des.
Doc.kind	
Resp.dept. PSTP/TPLA	Rev.ind. C
Lang. en	
Doc.No. 1MRK006502-TB	Sheet 8
	Cont. –