PRODUCT GUIDE

OEM Load Center Parts Program

by ABB

Table of contents

004	**Introduction**
005–007	**PowerMark Plus™ & PowerMark Gold™ load center selection guide**
008–012	**Q-line circuit breakers**
013–017	**Load center accessories**
018–041	**PowerMark Gold™ load center parts**
040–055	**PowerMark Plus™ load center parts**
056–058	**PowerMark Gold™ OEM specialty load center parts**

Introduction
OEM load center manual

A manual that helps you find solutions
ABB offers a comprehensive line of PowerMark Gold and PowerMark Plus load center interiors and components for Original Equipment Manufacturers (OEMs). This offering has been assembled to provide OEM's with unprecedented flexibility to meet customers needs.

OEM Load Center manual helps you select and identify load center components quickly and accurately. Based on your amperage needs and the number of circuits required, this manual identifies the part numbers for the interior and all component parts. Envelope drawings are provided for each interior to assist you in adapting the ABB interior to your own custom installation.

This manual features:
- Selection guide for residential main lug/convertible, main breaker and commercial load centers
- Circuit breaker selection guide
- Accessory selection guide
- Part number identification for all load center components
- Dimensioned envelope drawings

Dedication to quality
ABB load centers are designed, manufactured, sold, and serviced with a dedication to quality unequalled in the electrical components industry. All products are produced in accordance with Six Sigma Quality standards. Six Sigma is the disciplined methodology of defining, measuring, analyzing, improving, and controlling the quality in all our products, processes, and transactions—with the ultimate goal of virtually eliminating all defects. The Six Sigma initiative has changed the culture of ABB and impacts everything we do and every product we design.

Six Sigma Quality Initiative is reinforced with a solid warranty program on each load center. All PowerMark Gold™ load centers are backed by a lifetime warranty. ABB warrants that PowerMark Gold residential load centers will be free from defects in materials and workmanship, under normal care and proper installation, for the lifetime of the product.

The "contractor's load center"
In developing the PowerMark Gold load center, ABB consulted with practicing electrical contractors. We incorporated many features suggested to us by contractors, features that make PowerMark Gold the finest quality, easiest-to-use residential load centers. All PowerMark Gold load centers incorporate a tin-plated, solid copper bus for maximum conductivity and corrosion resistance. All load centers feature robust neutral bars that extend the full length of the bus for faster, more professional installations; plus, the neutral bars are raised, making them more accessible to speed installation. All enclosures are commercial-quality, heavy-gage steel with a protective galvanized finish for superior corrosion resistance. In addition, Robertson-style square-drive screws allow higher installation torque and prevent screwdriver slippage.

Money-saving THQP circuit breakers
All PowerMark Gold load centers accommodate reliable THQL one-inch-wide circuit breaker. PowerMark Gold load centers also accommodate unique space-saving one-half-inch THQP circuit breaker. THQP circuit breakers help save you money by providing installation flexibility. THQP circuit breakers are identical in design to THQL circuit breakers and they are tested to the same UL specifications. THQP circuit breakers are most beneficial when size and cost constraints are driving factors, helping you to be more cost competitive. They help free up space to allow new circuits to be added to a crowded load center and thus may prevent the need to upgrade to a larger load center. THQP circuit breakers are available in one- and two-pole designs up to 50 amps.

US National Electrical Code Paragraph 384-15 requires branch-circuit load centers to be provided with a physical means to prevent the installation of more circuit breakers than the number for which the load center was designed, rated, and approved. ABB load centers are designed to limit installation to no more than 42 total circuits per load center and thus the number of allowable THQP circuit breaker spaces may be limited. For information on which load centers accept THQP circuit breakers, reference the right-side view of each load center's envelope drawing. In addition, each load center page also provides a chart that indicates the maximum number of breakers per load center.

PowerMark Plus™ & PowerMark Gold™ load center selection guide

Single-phase, three-wire, 120/240 Vac

OEM interiors used in powermark gold load centers
- Main lug and convertible load center interiors
  - Factory-installed main lugs (TLM units convertible to main breaker)
  - Copper bus – tin-plated standard (all OEM interiors with suffix U2)
  - OEM interiors are UL-recognized components listed under UL file E21790

Features
- UL recognized component
- 60°/75° C conductor Rating
- Suitable for use as service entrance equipment when installed in accordance with the national electrical code
- 22 kAIC RMS symmetrical, except where noted

	Maximum spaces					Cat. no.			
	1" THQL		1/2" THQP						
Main ampere rating	1p	2p	1p	2p	Total 1-pole spaces	OEM interior with neutral bar	OEM interior without neutral bar	Complete load center with indoor enclosure	Drawing page #
70	2	1	4	1	4	TL270U2	-	TL270SCU	-
100	2	1	-		2	-	565B837G2	-	-
	4	2	8	3	8	TL412U	-	TPL412C	-
	6	3	12	4	12	TLM612U2[1]	TLM612U2N[1]	TLM612SCU	14
	8	4	16	6	16	TLM812U2[1]	TLM812U2N[1]	TLM812SCU	17
	12	6	24	10	24	TLM1212U2[2]	-	TLM1212CCU TM1210CCU TM1212CCU	20
	16	8	16	6	24	TLM1612U2[2]	-	TLM1612CCU TM1612CCU	22
125	24	12	-	-	24	TLM2412U2	-	TLM2412CCU TM2412CCU	24
150	24	12	12	4	30	TLM2415U2[3]	-	TLM3220CCU TM2415CCU	26
	16	8	32	14	32	TLM1620U2[3]	-	TLM1620CCU TM1615CCU TM1620CCU	28
	20	10	40	18	40	TLM2020U2[3]	-	TLM2020CCU TM2020CCU	30
	32	16	16	6	40	TLM3220U2[3]	-	TLM3220CCU TM3220CCU	32
200	40	20	-	-	40	TLM4020U2[3]	-	TLM4020CCU TM4020CCU	34
225	42	20	-	-	42	TLM4222U2[3]	-	TLM4222CCU TM4222CCU	36

[1] For main breaker, order THQLRK2 retainer kit plus THQL, THHQL, or TXQL circuit breaker separately.
[2] For main breaker, order mounting kit TQMH000. Also order THQL, THHQL, or TXQL circuit breaker separately.
[3] For main breaker, order THQMV main breaker (includes mounting base).

Three-phase, four-wire, 208Y/120 Vac[1]

OEM interiors used in PowerMark Plus load centers

Factory-installed main lug load center interiors

- OEM interiors are UL-recognized components listed under UL file E21790

	Maximum spaces				Cat. no.		
	1" THQL						
Main ampere rating	1-pole	2-pole	3-pole[2]	Total 1-pole spaces	OEM-interior	Complete-load center, indoor enclosure	Drawing page-#
100	3	1	1	3	565B837G1	-	-
125	12	6	4	12	TL12412U	TL12412C	38
	18	8	6	18	-	TL18415C	40
150	24	12	8	24	TL24415U	TL24415C	42
	18	8	6	18	-	TL18420C	44
	30	14	10	30	TL30420U	TL30420C	46
200	42	20	14	42	TL42420U	TL42420C	48
	30	14	10	30	TL30422U	TL30422C	50
225	42	20	14	42	TL42422U	TL42422C	52

[1] Also UL listed for 3-phase, 4-wire 240/120 Vac delta and 3-phase, 3-wire 240 Vac branch breakers installed.
[2] Three-pole plug-in breakers available through 100 amperes.

Main breaker–style load centers

- Main lugs not included
- OEM interiors are UL-recognized components listed under UL file E21790

	Maximum spaces				Cat. no.		
	1"-THQL						
Main ampere rating	1-pole	2-pole	3-pole	Total 1-pole spaces	OEM-interior	Complete-load center, Indoor enclosure	Drawing page-#
	12	6	4	12	TM12410U[1]	TM12410C	54
100	18	8	6	18	TM18410U[1]	TM18410C	56
125	30	14	10	30	TM30412U[2]	TM30412C	58
	24	12	8	24	TM24415U[2]	TM24415C	61
	30	14	10	30	TM30415U[2]	TM30415C	64
150	42	20	14	42	TM42415U[2]	TM42415C	67
	24	12	8	24	TM24420U[2]	TM24420C	70
	30	14	10	30	-	TM30420C	73
200	42	20	14	42	TM42420U[2]	TM42420C	76
225	42	20	14	42	TM42422U[2]	TM42422C	79

[1] Main breaker, THHQL32100 included.
[2] For main breaker, order TQD*X2 or THQD*X2 style breaker with appropriate mounting bracket (see drawings).

Single-phase, three-wire, 120/240 Vac

Specialty OEM interiors used by GE in PowerMark Gold meter socket load centers

- All specialty interiors are constructed without the neutral bar attached to the assembly. They are packaged with or without a separately mounted neutral bar.
- OEM interiors are UL-recognized components listed under UL file E21790

Types

- **Narrow style –** Breaker mounting rail on one side only (Column style).
- **Wide style –** Breaker mounting rail on two sides.
- **Split bus –** Two sections of bus. Used with multiple service disconnects.
- **Feed-thru –** Feed-thru lugs factory installed.
- **Main lug –** Factory-installed main lugs (MLO).
- **Main breaker –** Main breaker provisions, breaker sold separately.

	Maximum-spaces					Cat. no.			
	1"-THQL		1/2"-THQP						
Main ampere rating	1p	2p	1p	2p	Total 1-pole spaces	OEM-interior-with neutral-bar	OEM-interior without neutral bar	Main-type	Drawing page-#
Split-bus-/-feed- thru-/-narrow-style-(farm-panel)									
200	4	2	8	3	8	TSF420U	-	Main breaker [1 2]	82
Narrow-style-/-MLO									
200	4	2	8	3	8	TSLR420U	TSLR420UN	MLO	83
Narrow-style									
125	16	8	32	14	32	-	TSM1610UN	Main breaker [3]	85
200	20	10	40	18	40	-	TSM2020UN	Main breaker [2]	86
Wide-style-/-main-breaker									
125	12	6	24	10	24	TSMR1212U	-	Main breaker [4]	88
200	20	10	40	18	40	TSMR2015U	-	Main breaker [5]	89

[1] For subfeed main breaker, order THQL, THHQL, or TXQL, 110 A max.
[2] For main breaker, order THQMV*WL breaker with main breaker retainer THQLRK1.
[3] Reverse-fed main breaker retainer is not available; customer supplied.
[4] For main breaker, order THQL, THHQL, or TXQL with mounting kit TQMH000.
[5] For main breaker, order THQMV main breaker (includes mounting base).

Q-line circuit breakers

Standard circuit creakers

- UL listed (molded-case circuit breakers no. 489)
- Federal government specification qualified (WC-375B)
- 60°/75° C conductor rating
- Quick-make, quick-break
- Box-type terminals

		Wire-size-AWG/ kcmil	
Breaker-type	**Ampere-rating**	**Cu**	**Al**
THQP	15–25	14–8	12–8
	30–50	8–4	8–2
THQL THHQL TXQL	15–30	14–8	12–8
	35–60	8–3	8–2
	70–100	6–1/0	4–1/0
	110–125	2–2/0	2–2/0
TQDL THQDL	125–200	1/0–250	1/0–250

	10,000-AIC			**22,000-AIC**		**65,000-AIC**
	Type-THQP- 1/2" module	**Type-THQL-1"-module**		**Type-THHQL-1"-module**		**Type-TXQL-1"-module**
	120/240-Vac	**240- Vac**	**120/240-Vac**	**240- Vac**	**120/240-Vac**	**120/240-Vac**
Ampere rating	**Cat. no.**	**Cat. no.**	**Cat. no.**	**Cat. no.**	**Cat. no.**	**Cat. no.**
Single-pole [1]						
15 [2]	THQP115	THQL1115	-	THHQL1115	-	TXQL1115
20 [2]	THQP120	THQL1120	-	THHQL1120	-	TXQL1120
25	THQP125	THQL1125	-	THHQL1125	-	-
30	THQP130	THQL1130	-	THHQL1130	-	TXQL1130
35	THQP135	THQL1135	-	THHQL1135	-	-
40	THQP140	THQL1140	-	THHQL1140	-	-
45	THQP145	THQL1145	-	THHQL1145	-	-
50	THQP150	THQL1150	-	THHQL1150	-	-
Std. pkg.	5 cartons of 20	5 cartons of 10	-	5 cartons of 10	-	5 cartons of 10
Two-pole [3] :-incorporates-internal-common-trip-bar						
15	THQP215	THQL2115	-	THHQL2115	-	TXQL2115
20	THQP220	THQL2120	-	THHQL2120	-	TXQL2120
25	THQP225	THQL2125	-	THHQL2125	-	-
30	THQP230	THQL2130	-	THHQL2130	-	TXQL2130
35	THQP235	THQL2135	-	THHQL2135	-	-
40	THQP240	THQL2140	-	THHQL2140	-	-
45	THQP245	THQL2145	-	THHQL2145	-	-
50	THQP250	THQL2150	-	THHQL2150	-	-
60	-	THQL2160	-	THHQL2160	-	-
70	-	THQL2170	-	THHQL2170	-	-
80	-	THQL2180	-	THHQL2180	-	-
90	-	THQL2190	-	THHQL2190	-	-
100	-	THQL21100	THQL22100	THHQL21100	THHQL22100	-
110	-	THQL21110	-	THHQL21110	-	-
125	-	THQL21125	-	THHQL21125	-	-
Std. pkg.	5 cartons of 10	5 cartons of 5	5 cartons of 5	5 cartons of 5	5 cartons of 5	5 cartons of 5
125	-	-	-	-	-	-
150	-	-	-	-	-	-
175	-	-	-	-	-	-
200	-	-	-	-	-	-
Std. pkg.	-	10 cartons of 1	-	10 cartons of 1	-	-

	10,000-AIC			22,000-AIC		65,000-AIC
	Type-THQP- 1/2" module	Type-THQL-1"-module		Type-THHQL-1"-module		Type-TXQL-1"-module
	120/240-Vac	240- Vac	120/240-Vac	240- Vac	120/240-Vac	120/240-Vac
Ampere rating	**Cat. no.**	**Cat. no.**	**Cat. no.**	**Cat. no.**	**Cat. no.**	**Cat. no.**
Three-pole [3] : incorporates-internal-common-trip-bar						
15	-	-	THQL32015	-	THHQL32015	-
20	-	-	THQL32020	-	THHQL32020	TXQL32020
25	-	-	THQL32025	-	THHQL32025	TXQL32025
30	-	-	THQL32030	-	THHQL32030	TXQL32030
35	-	-	THQL32035	-	THHQL32035	
40	-	-	THQL32040	-	THHQL32040	
45	-	-	THQL32045	-	THHQL32045	
50	-	-	THQL32050	-	THHQL32050	
60	-	-	THQL32060	-	THHQL32060	
70	-	-	THQL32070	-	THHQL32070	
80	-	-	THQL32080	-	THHQL32080	
90		-	THQL32090	-	THHQL32090	
100	-	-	THQL32100	-	THHQL32100	
Std. pkg.	-	-	5 cartons of 3	-	5 cartons of 3	5 cartons of 3

[1] UL listed as HACR (heating, air conditioning, and refrigeration).
[2] UL listed as SWD (switching duty). Suitable for 120 volts ac fluorescent lighting loads.
[3] 15–100 A UL listed as HACR (heating, air conditioning, and refrigeration.).
[4] Requires four 1-inch spaces.

Main Circuit Breaker Kits

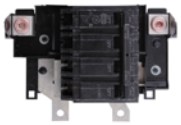

—
THQMV150

Features
- For use with PowerMark Gold OEM interiors with TLM prefix.
- 60°/75° C conductor rating
- Quick-make, quick-break
- Multipole breakers incorporate internal common trip
- Box-type terminals

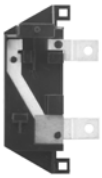

—
TQMH000 with breaker

PowerMark Gold™ main circuit breakers
- Two-pole, 120/240 Vac
- For use with 150–225 A PowerMark Gold load centers
- 22 kAIC RMS symmetrical
- Includes mounting base
- For specialty load center interiors with a main circuit breaker and lugs, use catalog number THQMV WL, with the appropriate main breaker rating inserted in the space.

Main-breaker rating,-A	Cat. no.
150	THQMV150E
175	THQMV175E
200	THQMV200E
225	THQMV225E

—
THQLRK1

PowerMark Gold™ main circuit breaker kits
- Two-pole, 120/240 Vac or 240 Vac
- For use with 125 A PowerMark Gold load centers

Cat. no.	
Main-breaker-kit	**Description**
TQMH000	Order appropriate THQL (10 kAIC) or THHQL (22 kAIC) breakers separately

Main breaker retainers

For main lug load centers using a back-fed branch breaker as a main

Load center	Breaker	Cat. no.	Std. pkg.
	THQL	THQLRK	
TL (225 A max)	TQDL	-	
		THQLRK1	
PowerMark Gold™	THQL	THQLRK2	1

PowerMark Plus™ main circuit breakers
- Three-pole, 240 Vac
- For use with 125-225A PowerMark Plus Interiors
- Line lugs only included
- Breaker Mounting Bracket indicated on Drawings

—
THQLSURGE

Surge arrester

- UL Listed (1449)
- Meets ANSI/IEEE Standard C62.11-1987
- Protects all circuits connected to load centers in which it is installed
  - Response time: Less than 1 nanosecond
  - Clamping voltage: 500 V
  - Maximum surge current: 27,000 A
  - Reaction time: 1 microsecond

—
THQL1120GF

Arc fault circuit interrupters

- UL listed (molded-case circuit breakers no. 489)
- UL classified for mitigating the effects of arc faults
- 10 kAIC RMS symmetrical

	1-pole,-120/240- Vac
Ampere rating	**Cat. no.**
15	THQL1115AF2
20	THQL1120AF2

CB3® ground fault

- UL listed (molded-case circuit breakers no. 489 And ground fault circuit interrupters no. 943)
- Class A (.005 ampere ground fault trip level)

		1-pole	2-pole
		120-Vac	**120/240- Vac**
	Ampere rating	**Cat. no.**	**Cat. no.**
	15	THQL1115GFT	THQL2115GFT
	20	THQL1120GFT	THQL2120GFT
	30	THQL1130GFT	THQL2130GFT
	40	-	THQL2140GFT
10 kAIC	50	-	THQL2150GFT
	15	THHQL1115GFT	-
	20	THHQL1120GFT	-
22 kAIC	30	THHQL1130GFT	-
	Std. pkd.	10 cartons of 1	10 cartons of 1

—
THQL21WY20

Switching neutral

- UL listed (molded-case circuit breakers no. 489)
- 10 kAIC RMS symmetrical
- Standard one- or two-pole automatic breaker plus one fully rated, nonautomatic pole

Rating,-A	1-pole-plus switching-neutral	2-pole-plus switching-neutral
	120/240-Vac	**120/240-Vac**
15	THQL21WY15	THQL31WY15
20	THQL21WY20	THQL31WY20
25	THQL21WY25	-
30	THQL21WY30	THQL31WY30
Std. pkg.	5 cartons of 5	5 cartons of 5

HID lighting

- UL listed (molded-case circuit breakers no. 489)
- HID breakers have been designed to handle the current and voltage spikes that result when gaseous discharge lamps, including fluorescent and HID lamps, are switched on and off.

		1-pole	2-pole
		120/240-Vac	120/240-Vac
	Ampere rating	Cat. no.	Cat. no.
	15	THQL1115HID	THQL2115HID
	20	THQL1120HID	THQL2120HID
	30	THQL1130HID	THQL2130HID
10 kAIC	15	-	THHQL2115HID
	20	THHQL1120HID	THHQL2120HID
22 kAIC	30	THHQL1130GF	THHQL2130HID
	Std. pkg.	5 cartons of 10	5 cartons of 10

Note: UL listed as SWD (switching duty). Suitable for 120 Vac fluorescent lighting loads.

—
THQL1140HM

High magnetic

- UL listed (molded-case circuit breakers no. 489)
- 10 kAIC RMS symmetrical
- High short-circuit setting suitable for circuits with inherent high in- rush load currents

	1-pole
	120-Vac
Ampere rating	Cat. no.
15	THQL1115HM
20	THQL1120HM
30	THQL1130HM
40	THQL1140HM
50	THQL1150HM
Std. pkg.	5 cartons of 10

—
TQL21Y100

Molded-case switches

- UL listed (molded-case switches no. 1087)
- Without overload or short-circuit protection

Vac		2-pole	3-pole
	Rating, A	Cat. no.	Cat. no.
120/240	100	TQL21Y100	-
240	60	TQL22Y60	TQL32Y60
	100	TQL22Y100	TQL32Y100
Std. pkg.		5 cartons of 5	5 cartons of 3

—
TQ1120

TQ circuit breakers

- 3/4-inch wide
- 10 kAIC RMS symmetrical
- UL classified
- For use in Square D QO® load centers

Rating,-A	1-pole	2-pole
	Cat.no.	Cat.no.
15	TQ1115	TQ2115
20	TQ1120	TQ2120
30	TQ1130	TQ2130
40	TQ1140	TQ2140
50	TQ1150	TQ2150
60	—	TQ2160
Std. pkg.	1 carton of 10	1 carton of 5

Load Center Accessories

Equipment ground kits

—
PowerMark Plus equipment ground kits

Number of terminals				
Small-14–8 Cu,-12–8-Al	**Large-14–4 Cu,-12–4-Al**	**Other-AWG/ kcmil-Cu/Al**	**Cat. no.**	**Std. pkg.**
4	3	-	TGL1[1]	
7	-	-	TGL3[1]	
11	3	-	TGL2[2]	
14	-	-	TGL4[2]	
10	2	(1) 14–2	TGL8[2]	
-	-	(1) 6–2/0	TGL20[3]	20
-	-	(3) 10–1/0	TNG3[4]	
-	-	(6) 10–1/0	TNG6[4]	

[1] TGL1 and TGL3 mount interchangeably.
[2] TGL2, TGL4, and TGL8 mount interchangeably.
[3] Add-on equipment ground lug (for use on any TGL kit).
[4] Suitable only for 400 and 600 amp devices.

—
PowerMark Gold and three-phase PowerMark Plus equipment ground and isolated ground bus bar

Description (4–14-Cu/10–12-Al-Wire Ranges per hole, solid-or-stranded)	Cat. no.	Std. pkg.
12-hole Ground	TGK12	
24-Hole Ground	TGK24	
32-Hole Ground	TGK32	
42-Hole Ground	TGK42	
Isolated ground bus bar kit (order with TGK equipment ground kits)	TGKIS	1

—
TGL2

—
TGK12 with TGKIS

—
TGK12

Neutral kits

—

PowerMark Plus neutral kits

Wire size AWG/ kcmil Cu/Al	Cat. no.	Std. pkg.
(5) 14–1/0	TNLK1[1]	
(3) 1–300	TNLK2[1]	
(1) 6–2/0	286A8894G1[2]	
(1) 1–300 Cu or 2/0–300 Al	192A7663G13[2]	1

[1] Suitable only for 400 and 600 amp devices.
[2] Add-on neutral lug kit for 100–200 amp load centers.

—

PowerMark Gold neutral and neutral ground kits

Description	Wire size, Cu/Al	Cat. no.	Std. pkg.
Neutral	6–2/0	TNLK20	
Neutral	6–250	TNLK250	
Neutral/ground	6–2/0	TLK20	
Neutral/ground	6–250	TLK250	1

Main lug kits

Load center type	Wire size AWG/kcmil Cu/Al	Ampere rating	Cat. no.
	2–3/0	150	THLK150
PowerMark Plus	1–250	200	THLK200
	6–2/0	125	TMLK125
	6–250	200	TMLK200
PowerMark Gold	6–300	225	TMLK225

—
TNLK1

—
TLK20 shown attached to neutral/ground bar

—
TLK250 shown attached to neutral/ground bar

—
TNLK20

—
TGL2

—
TLK20

—
TLK250

—
TLK250

—
TLK250

—
TDL106

—
Door lock

Description	Cat. no.	Std. pkg.
For all indoor load centers except TPL412	TDL106	10

—
TD42

—
Circuit directory

Description	Cat. no.	Std. pkg.
Card and holder with pressure-sensitive backing. Mounts inside door.	TD42	1

—
TSP61

—
Touch-up paint

Description	Cat. no.	Std. pkg.
12.75 oz. spray can of light-gray enamel	TSP61	1

—
TFH

—
Front filler plates (to cover rectangular breaker knockouts)

Knockout width	Cat. no.	Std. pkg.
1/2"	TFH	100
1"	TQLFP1	50

—
TC150

—
Universal rain-tight hubs (aluminum)
For outdoor enclosures with removable closing caps

Nominal conduit diameter in inches	Cat. no.	Std. pkg.
3/4	TC75	
1	TC100	
$1^{1/4}$	TC125	
$1^{1/2}$	TC150	
2	TC200	
$2^{1/2}$	TC250	
Closing cap	TCCP	10
3	TC300	5

—
TRL22

—
Door handles

Location of main lugs or main breaker	Cat. no.	Std. pkg.
Top	TRL22	1
Bottom	TRL22B	

THP100

Handle locks (padlocking)
ON or OFF, snap-on, padlock not included

Breaker	Cat. no.	Std. pkg.
THQP	TQPPL	
THQL	THP100	10

THL103

Handle locks (non-padlocking)
ON or OFF, snap-on

Breaker	Cat. no.	Std. pkg.
THQP	TQPL	
THQL	THL103	10

THT1, THT2, THT104

Handle ties
For two single-pole breakers (all multipole breakers have internal common trip)

Breaker	Description	Cat. no.	Std. pkg.
	Solid snap-on trip indicating	THT1	**100**
THQP	For two THQPs separated by two side-by-side THQPs	THT2	**20**
	Solid snap-on	THT104	**50**
THQL	Trip indicating	TQHT1	**20**

Load center hardware & hardware kits

Description	Cat. no.	Std. pkg.
PowerMark Gold bond screw kit with one bond screw	TBS	
PowerMark Gold hardware kit with 20 front-mounting screws	THDWRKIT	1

—
THLK2125

Subfeed and feed-through lugs

- UL listed
- For use in load centers to economically supply power to subpanel
- Includes mounting base

Poles	Rating, A	Cat. no.
2	125	THLK2125
3	125	THLK3125
2	150	THLK2150[1]
2	200	THLK2200[1]
3	225	THLK3225[1]

[1]For use with PowerMark Gold load centers only.

PowerMark Gold™ load center parts

TLM612U2

Part number	Description	Min. qty.	Master pack qty.
Interior Assembly			
TLM612U2 TLM612U2N	Interior with neutral, 6 circuit, 125 A, Cu interior without neutral, 6 Circuit, 125 A, Cu	1	10
THDWRKIT2	Interior mounting screw kit	10	10
Front assembly			
TLM6FC	Flush front, TLM612FCU	1	1
TLM6FCD	Flush front with door, TLM612FCUD	1	1
TLM6SC	Surface front, TLM612SCU	1	1
TLM6SCD	Surface front with door, TLMSCUD	1	1
THDWRKIT	Front mounting screw kit	20	1
Box assembly			
LC612BOX	Box assembly	1	72
Accessories			
TBS	Bonding screw kit	1	1
TGK12	Equipment ground kit	1	200

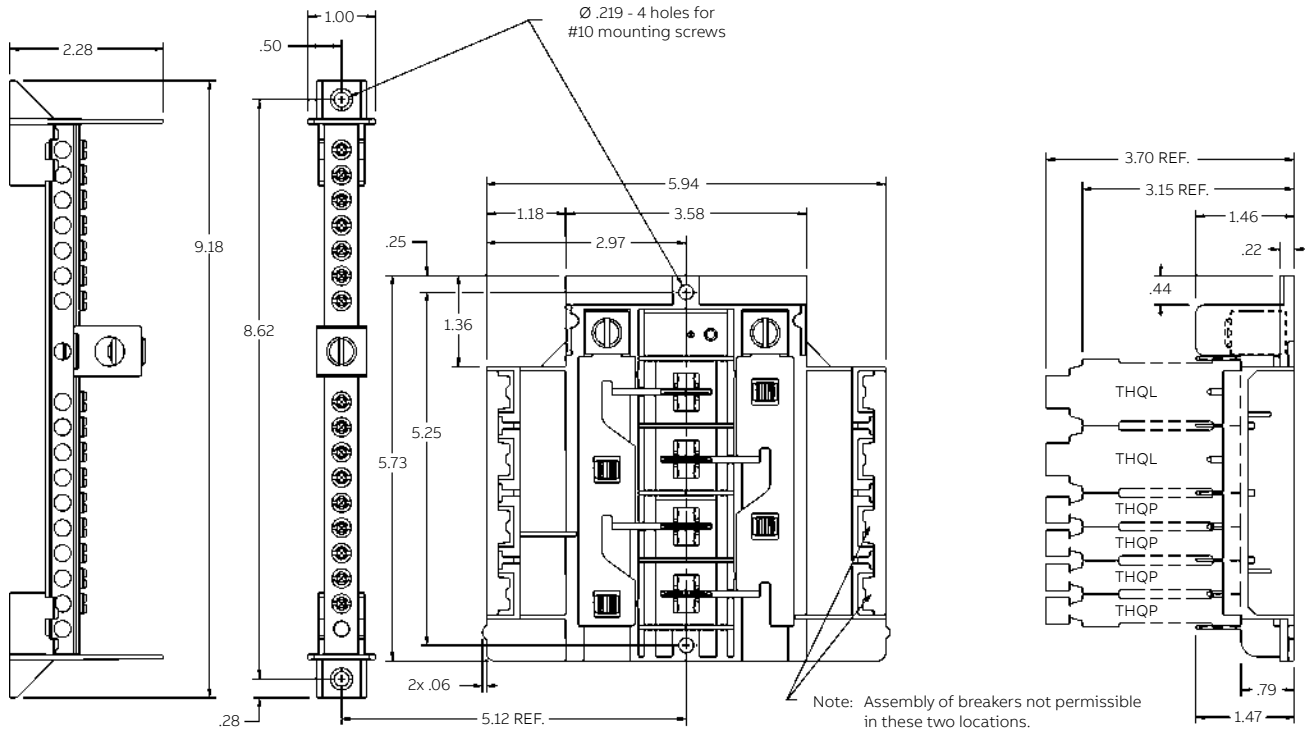

Single-phase, three-wire, 120/240
Vac factory-installed main lugs.

—
OEM interiors are UL-recognized components listed under UL file E21790

Main ampere rating	Maximum spaces				Total 1-pole spaces
	1" THQL		1/2" THQL		
	1-pole	2-pole	1-pole	2-pole	
125	6	3	12	4	12

Features

- UL listed (panelboards no. 67)
- 60° C and 75° C conductor rating.
- 22,000 amperes RMS symmetrical short-circuit rating.

—

Neutral terminations

Solid, AWG	Stranded, AWG
14–10 Cu	14–4 Cu
12–10 Al	12–4 Al

—

Equipment ground terminations

Solid, AWG	Stranded, AWG
14–4 Cu	14–4 Cu
12–10 Al	12–4 Al

—

Wire sizes

Line	Neutral lugs
6–3 Cu-Al	6–2/0 Cu-Al

—
Flush mount
TLM612FCU

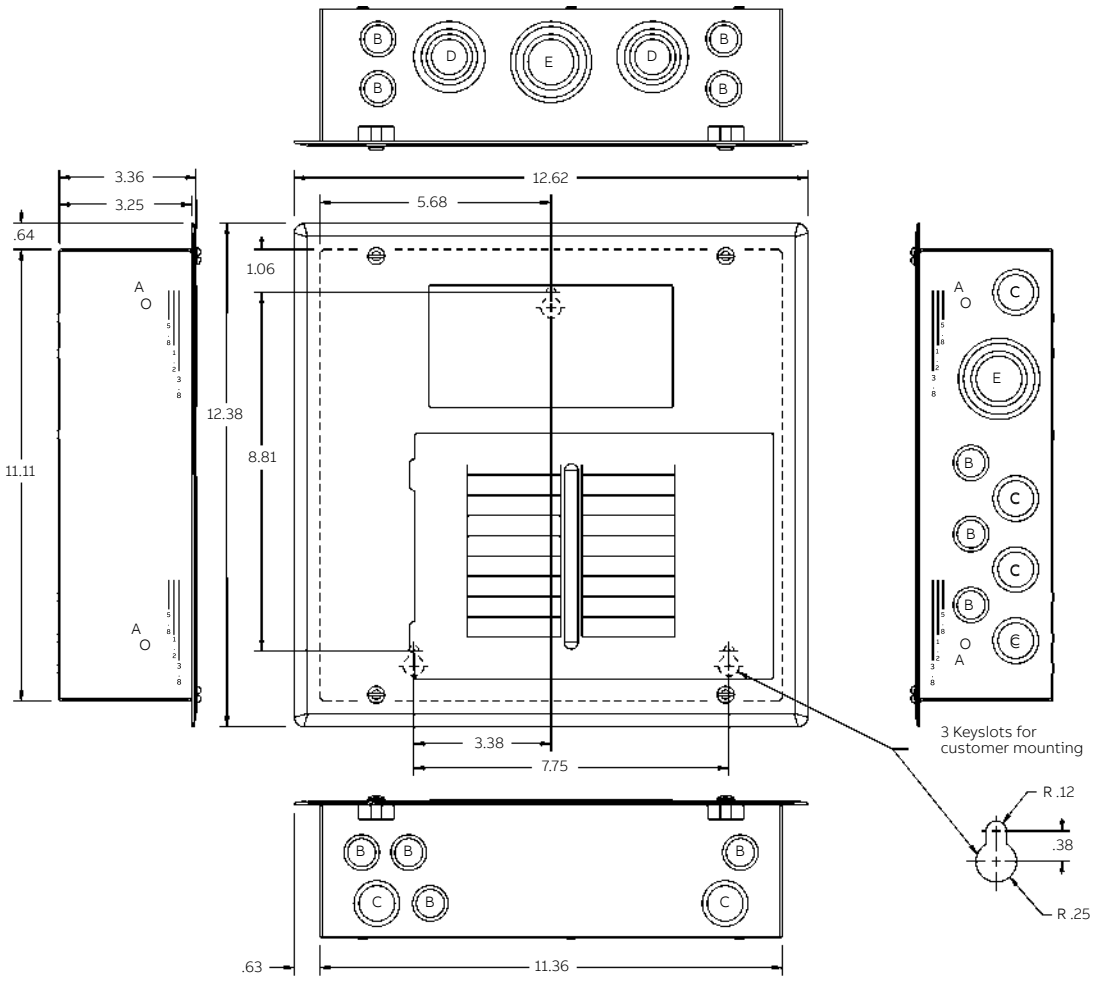

Knockout legend	
SYM	Description
A	9/32 KNOCKOUT
B	3/8 × 1/2 KNOCKOUT
C	1/2 × 3/4 KNOCKOUT
D	1/2 × 3/4 × 1 × 1-1/4 KNOCKOUT
E	3/4 × 1 × 1-1/4 × 1-1/2 KNOCKOUT

Features

- UL listed (panelboards no. 67)
- 60° C and 75° C conductor rating.
- 22,000 amperes RMS symmetrical short-circuit rating.

—
Surface mount
TLM612SCU

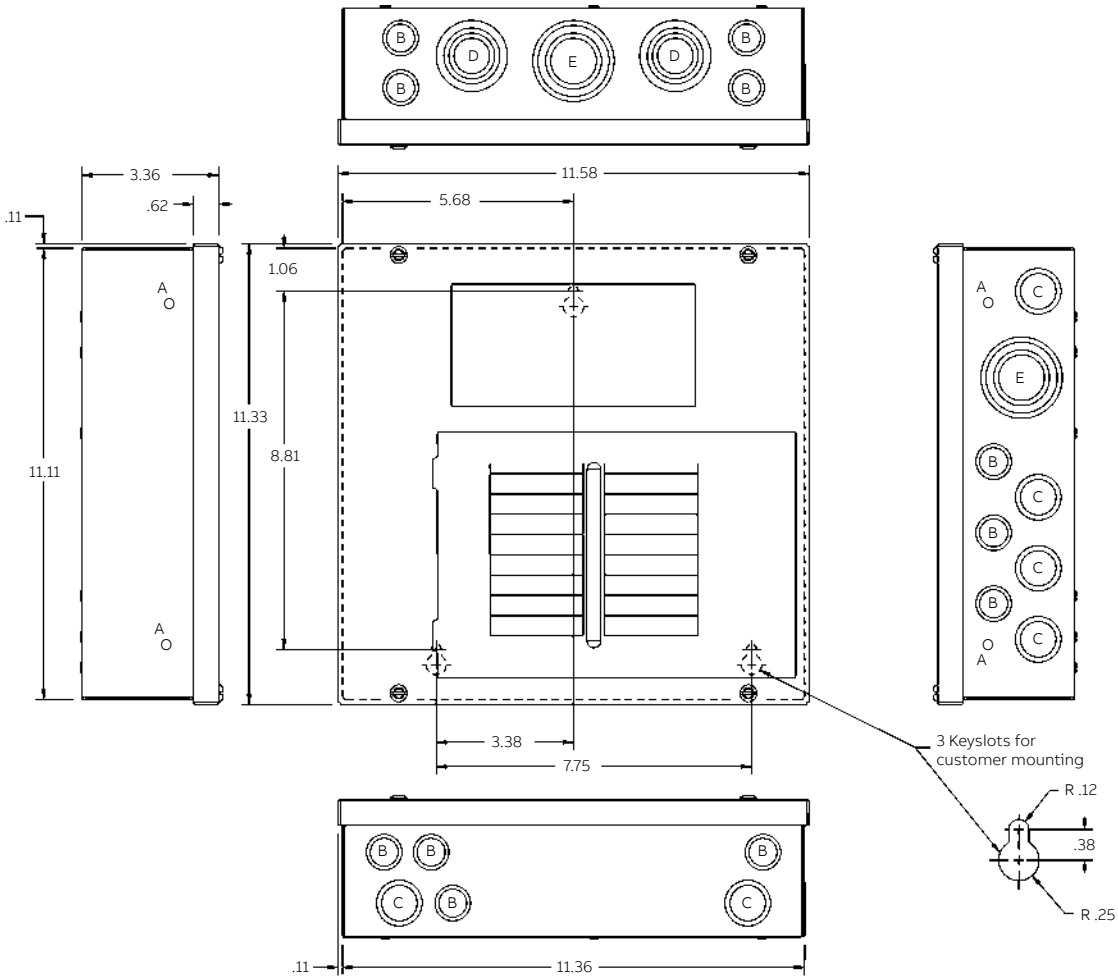

Knockout legend	
SYM	**Description**
A	9/32 KNOCKOUT
B	3/8 × 1/2 KNOCKOUT
C	1/2 × 3/4 KNOCKOUT
D	1/2 × 3/4 × 1 × 1-1/4 KNOCKOUT
E	3/4 × 1 × 1-1/4 × 1-1/2 KNOCKOUT

TLM812U2

Part number	Description	Min. qty.	Master pack qty.
Interior assembly			
TLM812U2 TLM812U2N	Interior with neutral, 8 circuit, 125 A, Cu Interior without neutral, 8 Circuit, 125 A, Cu	1	10
THDWRKIT2	Interior mounting screw kit	10	10
Front assembly			
TLM8FC	Assembly, front and pan, flush mount	1	1
TLM8FCD	Door, flush mount, front assembly	1	1
TLM8SC	Assembly, front and pan, surface mount	1	1
TLM8SCD	Door, surface mount, front assembly	1	1
THDWRKIT	Front mounting screw kit	20	20
Box assembly			
LC612BOX	Box assembly	1	72
Accessories			
TBS	Bonding screw kit	1	1
TGK12	Equipment ground kit	1	200

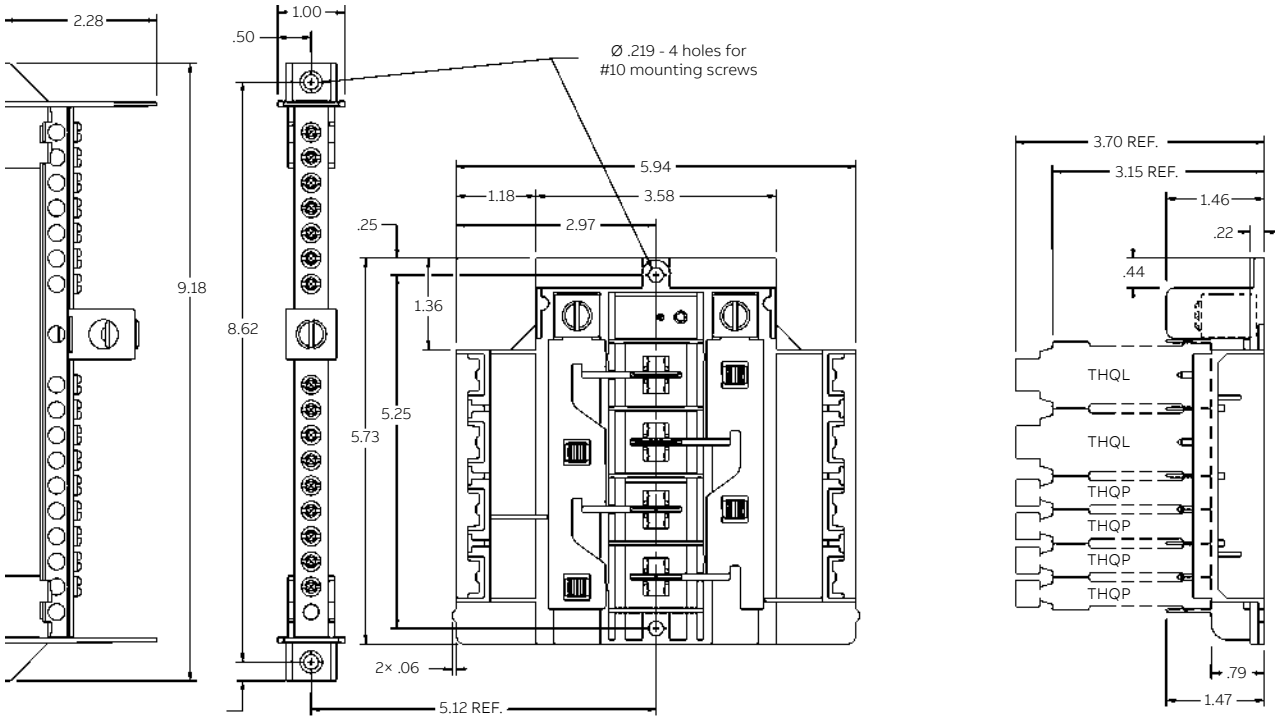

Single-phase, three-wire, 120/240 Vac factory-installed main lugs.

—

OEM interiors are UL-recognized components listed under UL file E21790

Main ampere rating	Maximum spaces				Total 1-pole spaces
	1" THQL		1/2" THQL		
	1-pole	2-pole	1-pole	2-pole	
125	8	4	16	6	16

Features

- UL listed (panelboards no. 67)
- 60° C and 75° C conductor rating.
- 22,000 amperes RMS symmetrical short-circuit rating.

—

Neutral terminations

Solid, AWG	Stranded, AWG
14–10 Cu	14–4 Cu
12–10 Al	12–4 Al

—

Equipment ground terminations

Solid, AWG	Stranded, AWG
14–4 Cu	14–4 Cu
12–10 Al	12–4 Al

—

Wire sizes

Line	Neutral lugs
6–3 Cu-Al	6–2/0 Cu-Al

—
Flush mount
TLM812FCU

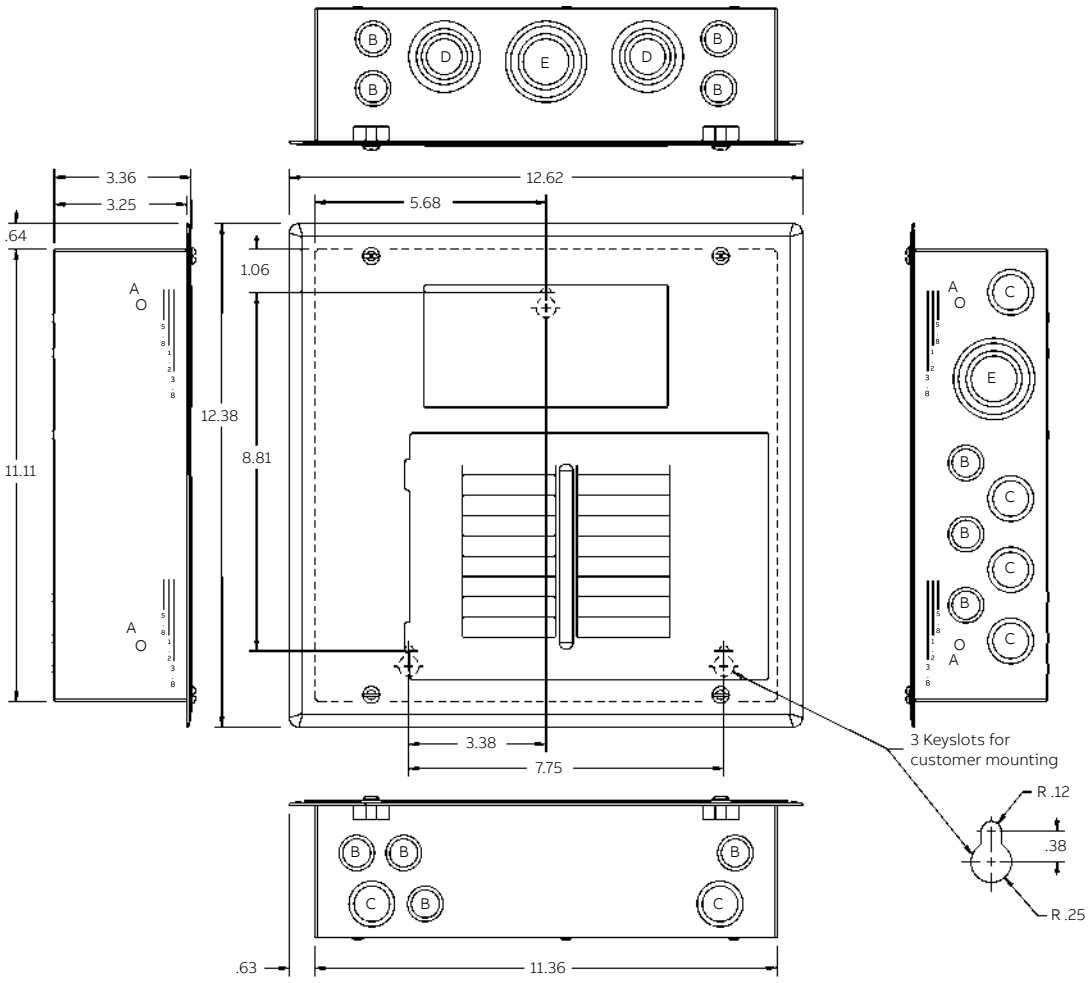

Knockout legend	
SYM	**Description**
A	9/32 KNOCKOUT
B	3/8 × 1/2 KNOCKOUT
C	1/2 × 3/4 KNOCKOUT
D	1/2 × 3/4 × 1 × 1-1/4 KNOCKOUT
E	3/4 × 1 × 1-1/4 × 1-1/2 KNOCKOUT

Features

- UL listed (panelboards no. 67)
- 60° C and 75° C conductor rating.
- 22,000 amperes RMS symmetrical short-circuit rating.

—
Surface Mount
TLM812SCU

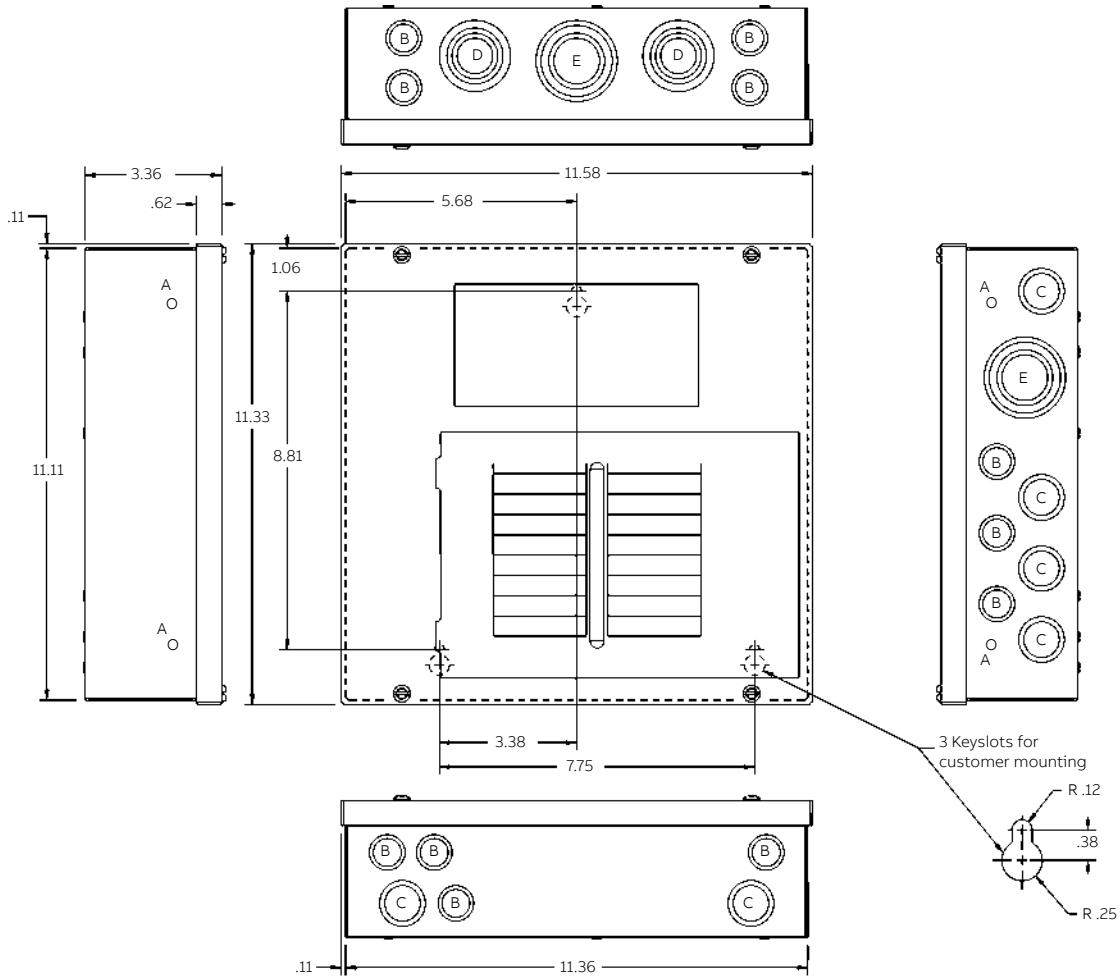

Knockout legend	
SYM	**Description**
A	9/32 KNOCKOUT
B	3/8 × 1/2 KNOCKOUT
C	1/2 × 3/4 KNOCKOUT
D	1/2 × 3/4 × 1 × 1-1/4 KNOCKOUT
E	3/4 × 1 × 1-1/4 × 1-1/2 KNOCKOUT

TLM1212U2

Part number	Description	Min. qty.	Master pack qty.
Interior assembly			
TLM1212U2	Interior, 12 circuit, 100–125 A, Cu	1	10
THDWRKIT2	Interior mounting screw kit	10	10
Front assembly			
TLM12BC TM12FC	Assembly, front and pan for convertible main For main breaker units	1	1
139C5515P2	Door	1	1
192A6597P1	Hinge	3	1200
THDWRKIT	Front mounting screw kit	20	20
Box assembly			
LC1212BOX	Box assembly	1	40
Accessories			
TBS	Bonding screw kit	1	1
TGK12, TGK24	Equipment ground kit	1	200

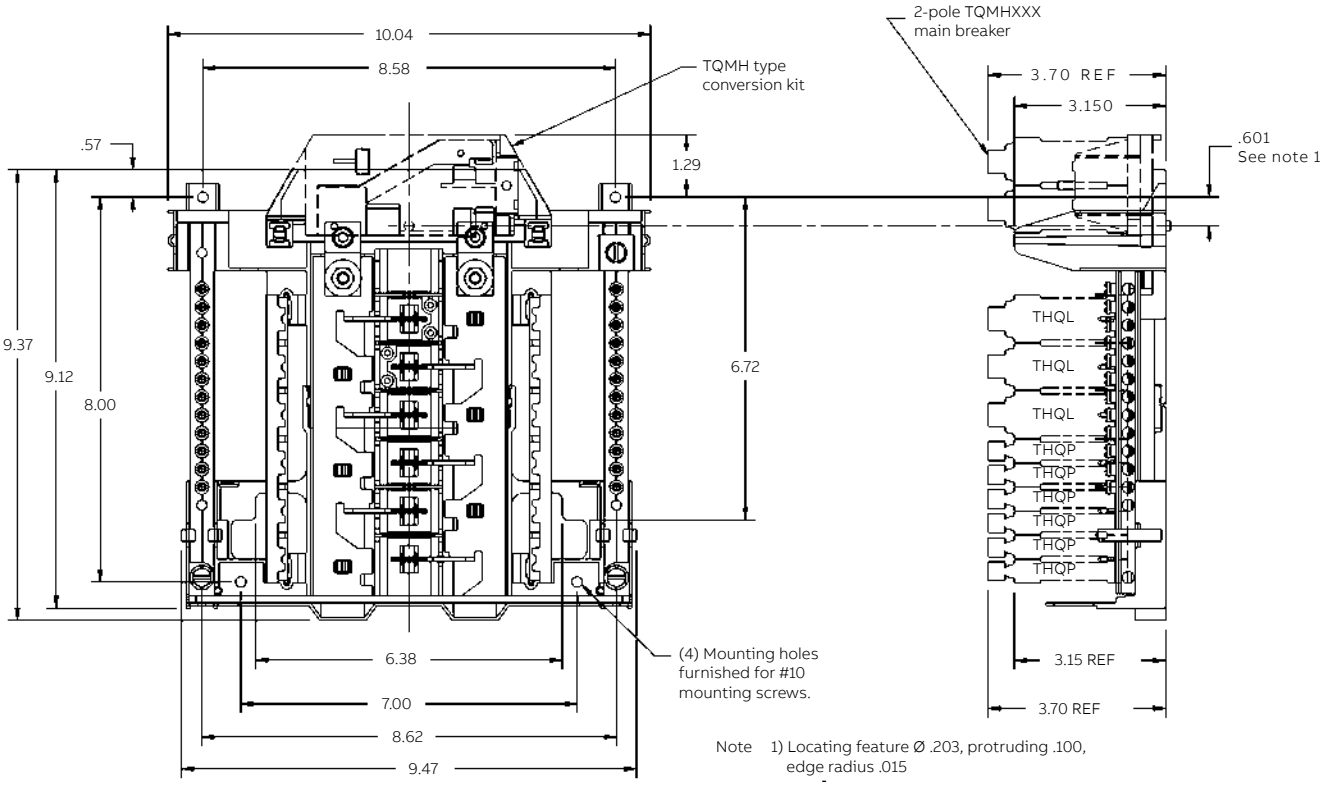

Note 1) Locating feature Ø .203, protruding .100, edge radius .015

—

OEM interiors are UL-recognized components listed under UL file E21790

Main ampere rating	Maximum spaces				Total 1-pole spaces	Main breaker conv kit
	1" THQL		1/2" THQL			
	1-pole	2-pole	1-pole	2-pole		
125	12	6	24	10	24	TQMH000

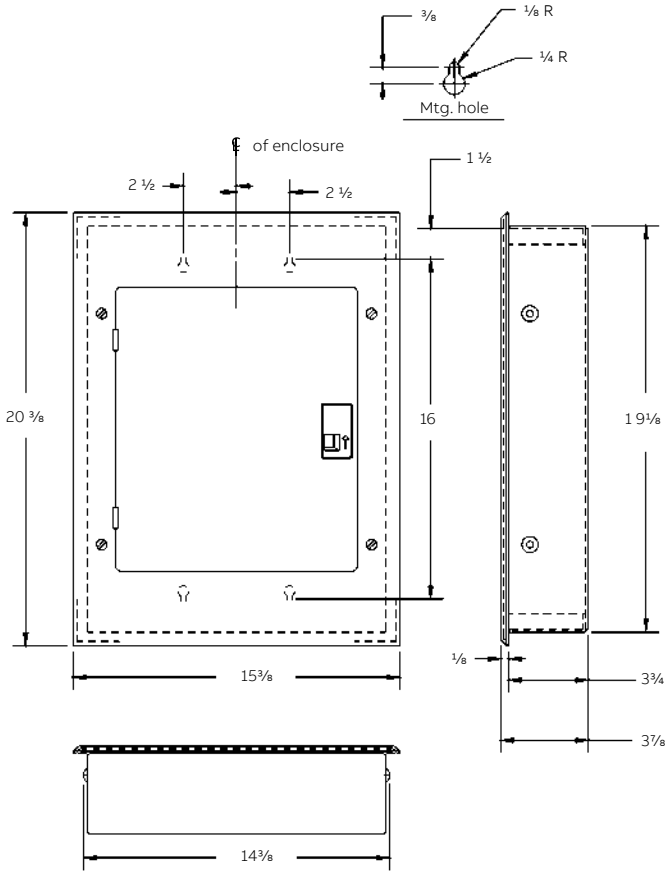

Features

- UL listed (panelboards No. 67)
- 60° C and 75° C conductor rating.
- 22,000 amperes RMS symmetrical short-circuit rating.

Equipment ground terminations

Solid, AWG	Stranded, AWG
14–4 Cu	14–4 Cu
12–10 Al	12–4 Al

Neutral terminations

Solid, AWG	Stranded, AWG
14–10 Cu	14–4 Cu
12–10 Al	12–4 Al

Wire sizes

Line	Neutral lugs
6–2/0 Cu-Al (TLM1212)	
4–1/0 Cu-Al (TM1210)	
1–2/0 Cu-Al (TM1212)	6–2/0 Cu-Al

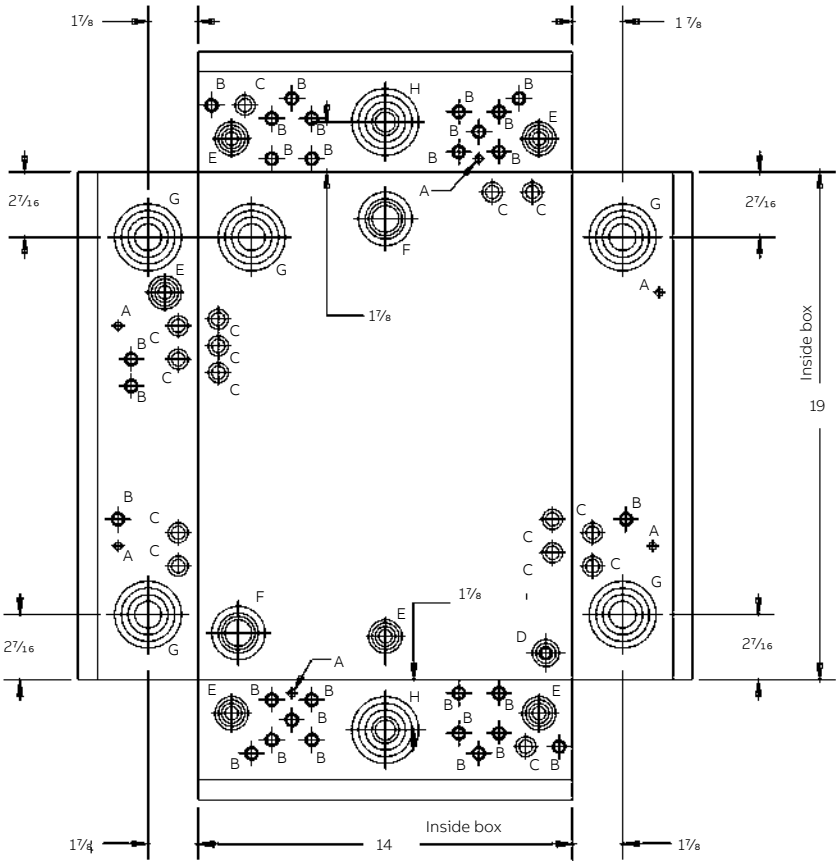

Knockout diagram	
SYM	**Description**
A	9/32 K.O.
B	3/8 × 1/2 K.O.
C	1/2 × 3/4 K.O.
D	3/8 × 1/2 × 3/4 × 1 K.O.
E	1/2 × 3/4 × 1 × 1 1/4 K.O.
F	1× 1 1/2 × 2 × 2 1/2 K.O.
G	3/4 1 × 1 1/4 × 1 1/2 × 2 ×2 1/2 K.O.
H	1/2 × 3/4 × 1 × 1 1/4 K.O.

Note: All k.O locating dimensions are inside of box.

TLM1612U2

Part number	Description	Min. qty.	Master pack qty.
Interior assembly			
TLM1612U2	Interior, 16 circuit, 125 A, Cu	1	10
THDWRKIT2	Interior mounting screw kit	10	10
Front assembly			
TLM16DC TM16EC	Assembly, front and pan for convertible main for main breaker units	1	1
139C5515P2	Door	1	1
192A6597P1	Hinge	3	1200
THDWRKIT	Front mounting screw kit	20	20
Box assembly			
LC1212BOX	Box assembly	1	40
Accessories			
TBS	Bonding screw kit	1	1
TGK12, TGK24	Equipment ground kit	1	200

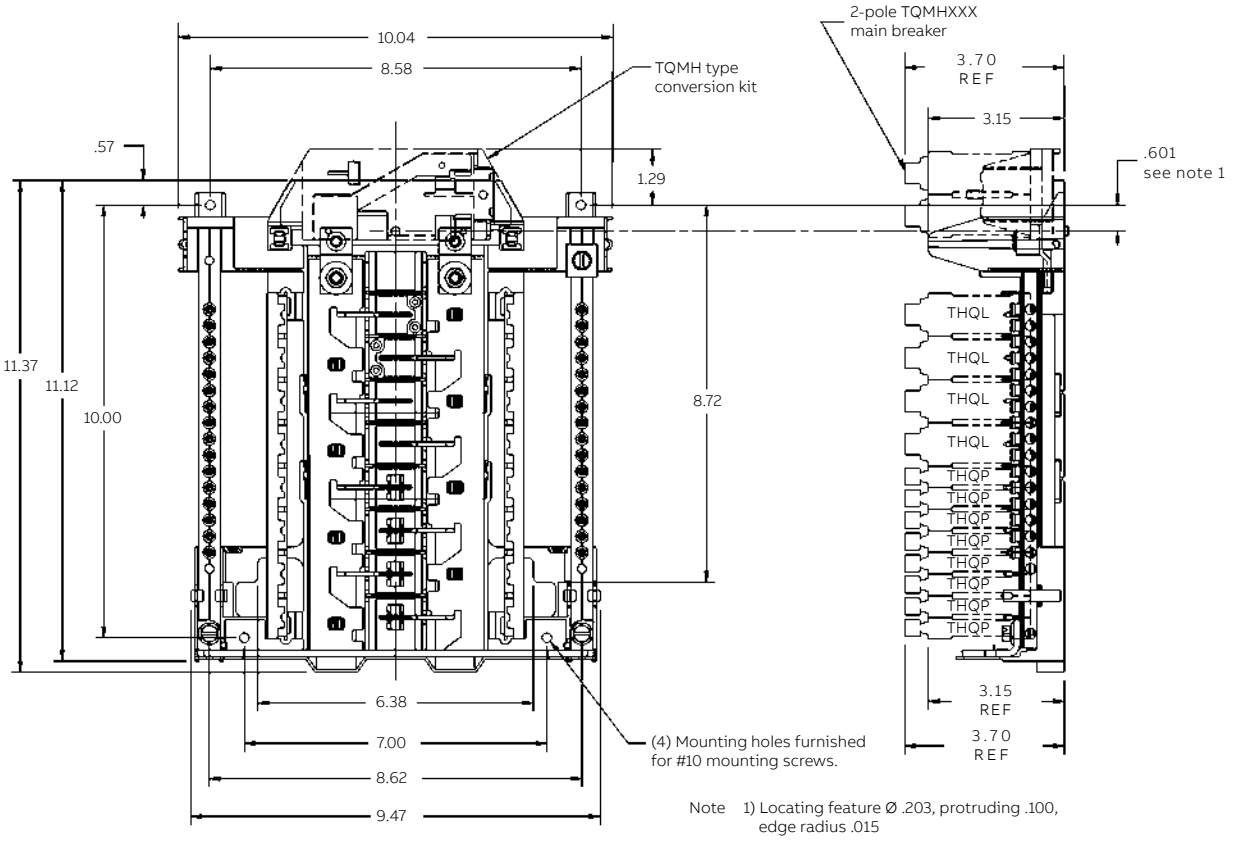

—

OEM interiors are UL-recognized components listed under UL file E21790.

Main ampere rating	Maximum spaces				Total 1-pole spaces	Main breaker conv kit
	1" THQL		1/2" THQL			
	1-pole	2-pole	1-pole	2-pole		
125	12	6	24	10	24	TQMH000

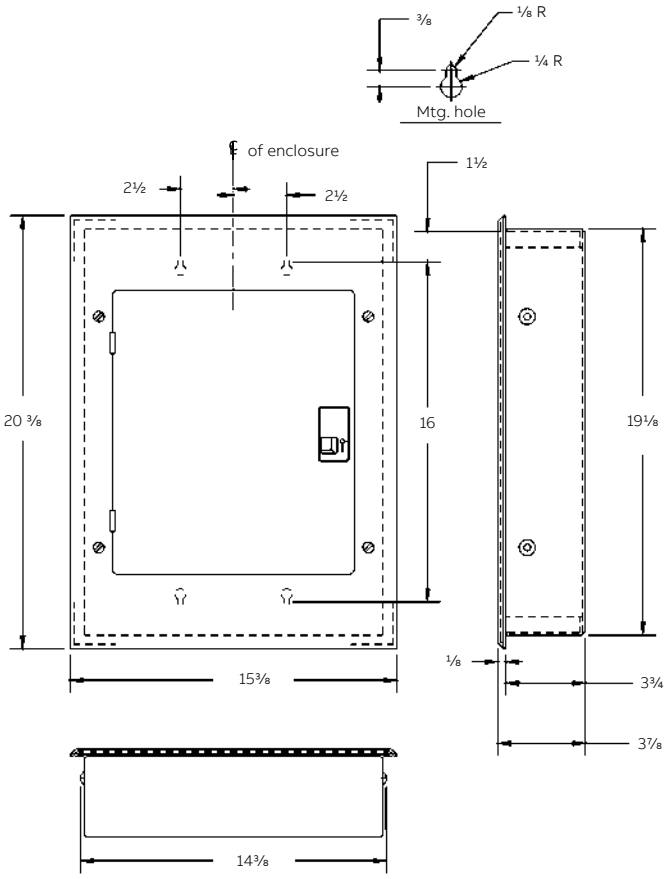

Features

- UL listed (panelboards no. 67)
- 60° C and 75° C conductor rating.
- 22,000 amperes RMS symmetrical short-circuit rating.

Equipment ground terminations

Solid, AWG	Stranded, AWG
14–4 Cu	14–4 Cu
12–10 Al	12–4 Al

Neutral terminations

Solid, AWG	Stranded, AWG
14–10 Cu	14–4 Cu
12–10 Al	12–4 Al

Wire sizes

Line	Neutral lugs
1–2/0 Cu-Al	6–2/0 Cu-Al

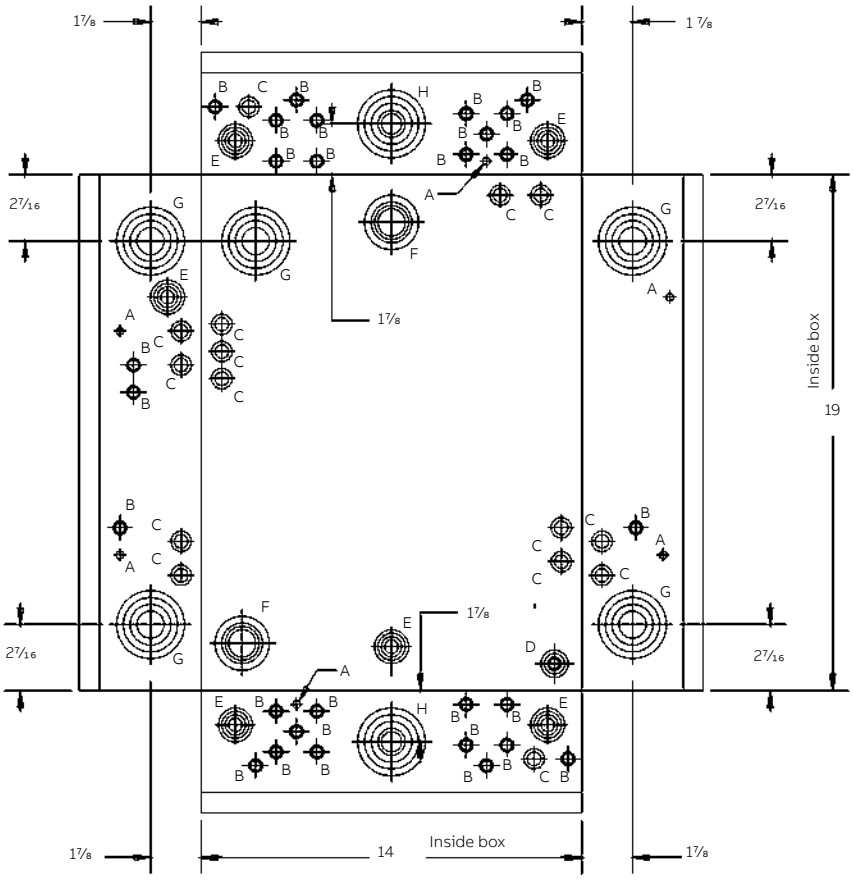

Knockout diagram

SYM	Description
A	9/32 K.O.
B	3/8 × 1/2 K.O.
C	1/2 × 3/4 K.O.
D	3/8 × 1/2 × 3/4 × 1 K.O.
E	1/2 × 3/4 × 1 × 1 1/4 K.O.
F	1× 1 1/2 × 2 × 2 1/2 K.O.
G	1× 1 1/2 × 2 × 2 1/2 K.O.
H	3/4 1 × 1 1/4 × 1 1/2 × 2 ×2 1/2 K.O.

Note: All K.O. locating dimensions are inside of box.

TLM2412U2

Part number	Description	Min. qty.	Master pack qty.
Interior assembly			
TLM2412U2	Interior, 24 circuit, 125 A, Cu	1	10
THDWRKIT2	Interior mounting screw kit	10	10
Front assembly			
TLM24BC	Assembly, front and pan	1	1
139C5515P3	Door	1	1
192A6597P1	Hinge	3	1200
THDWRKIT	Front mounting screw kit	20	20
Box assembly			
LC24415BOX	Box assembly	1	24
Accessories			
TBS	Bonding screw kit	1	1
TGK24	Equipment ground kit	1	1

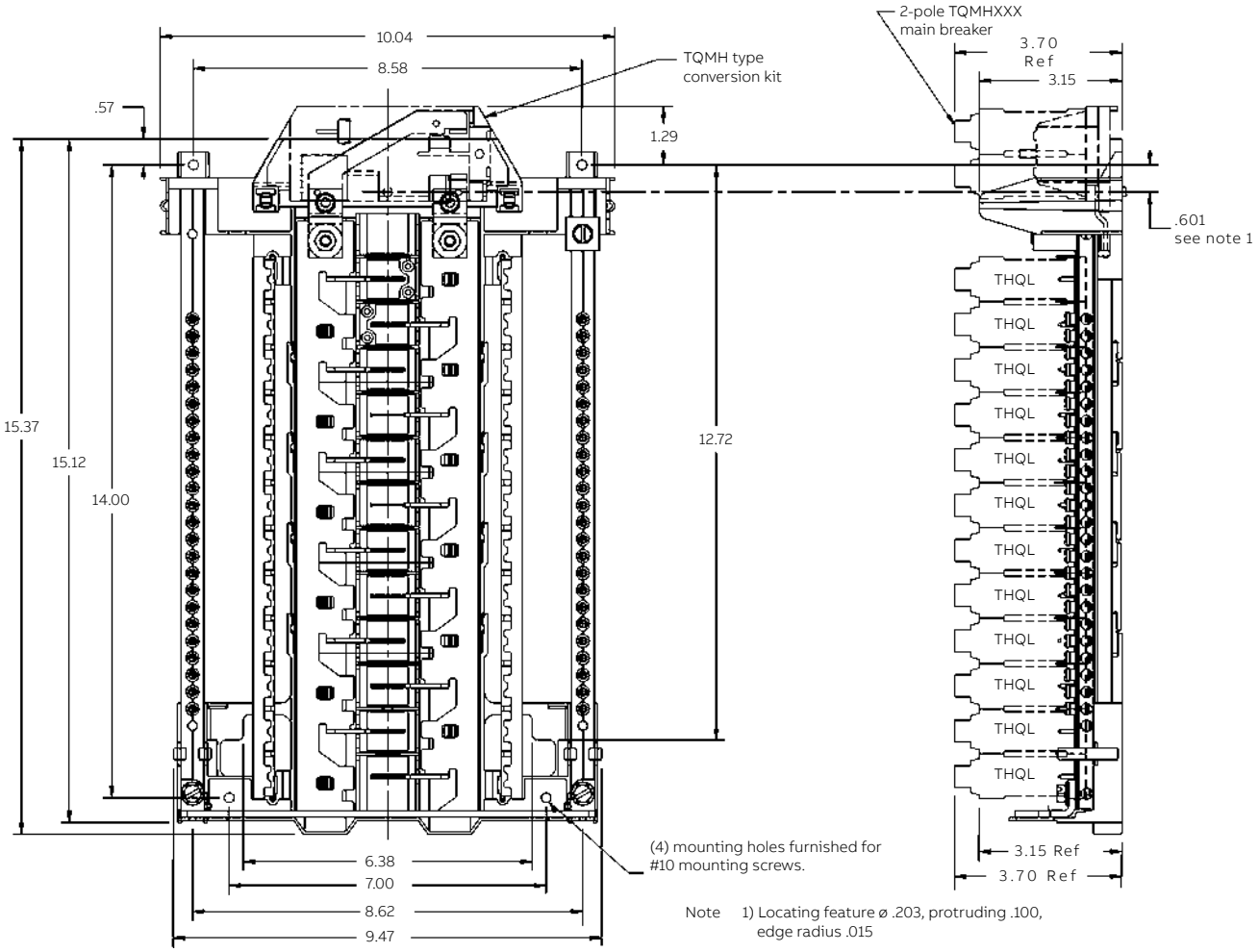

—
OEM interiors are UL-recognized components listed under UL file E21790

Main ampere rating	Maximum spaces				Total 1-pole spaces	Main breaker conv kit
	1" THQL		1/2" THQL			
	1-pole	2-pole	1-pole	2-pole		
125	24	12	-	-	24	TQMH000

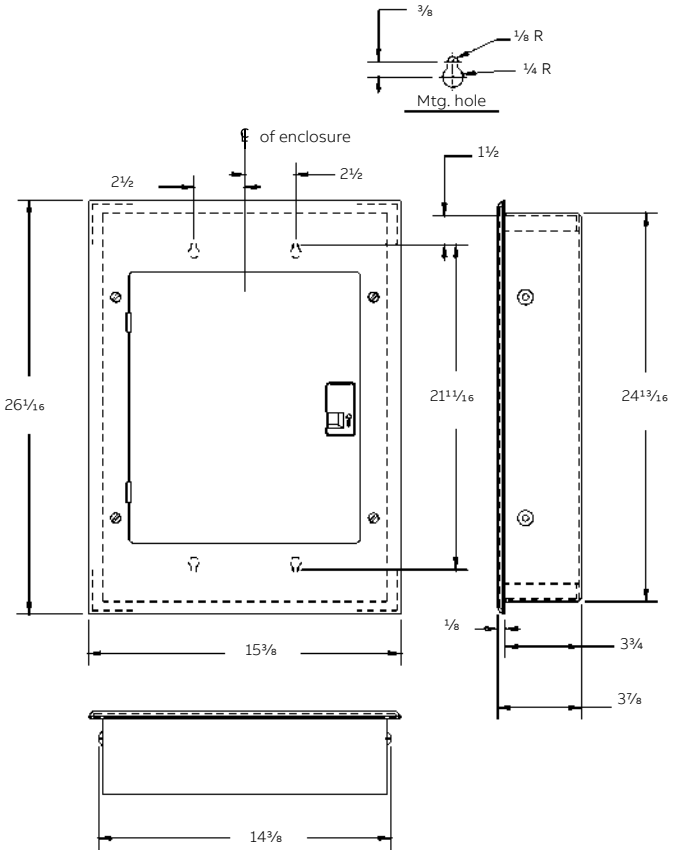

Features

- UL listed (panelboards no. 67)
- 60° C and 75° C conductor rating.
- 22,000 amperes RMS symmetrical short-circuit rating.

Equipment ground terminations

Solid, AWG	Stranded, AWG
14–4 Cu	14–4 Cu
12–10 Al	12–4 Al

Neutral terminations

Solid, AWG	Stranded, AWG
14–10 Cu	14–4 Cu
12–10 Al	12–4 Al

Wire sizes

Line	Neutral lugs
6–2/0 Cu-Al (TLM) 1–2/0 Cu-Al (TM)	6–2/0 Cu-Al

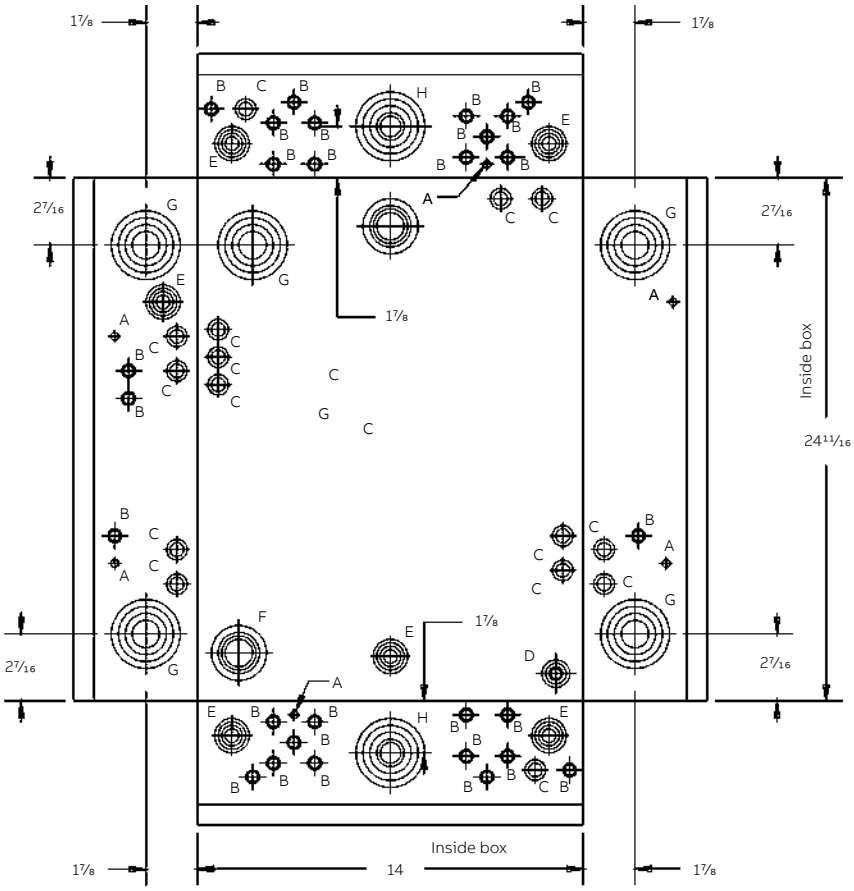

Knockout diagram

SYM	Description
A	9/32 K.O.
B	3/8 × 1/2 K.O.
C	1/2 × 3/4 K.O.
D	3/8 × 1/2 × 3/4 × 1 K.O.
E	1/2 × 3/4 × 1 × 1 1/4 K.O.
F	1× 1 1/2 × 2 × 2 1/2 K.O.
G	1 X 1 1/2 X 2 X 2 1/2 K.0.
H	3/4 X 1 X 1 1/4 X 1 1/2 X 2 X 2 1/2 K.0.

Note: All K.O. locating dimensions are inside of box.

TLM2415U2

Part number	Description	Min. qty.	Master pack qty.
Interior assembly			
TLM2415U2	Interior, 24 circuit, 150 A, Cu	1	10
THDWRKIT2	Interior mounting screw kit	10	10
Front assembly			
TM24EC	Assembly, front and pan	1	1
139C5515P3	Door	1	1
192A6597P1	Hinge	3	1200
THDWRKIT	Front mounting screw kit	20	20
Box assembly			
LC2015BOX	Box assembly	1	24
Accessories			
TBS	Bonding screw kit	1	1
TGK24, TGK32	Equipment ground kit	1	1

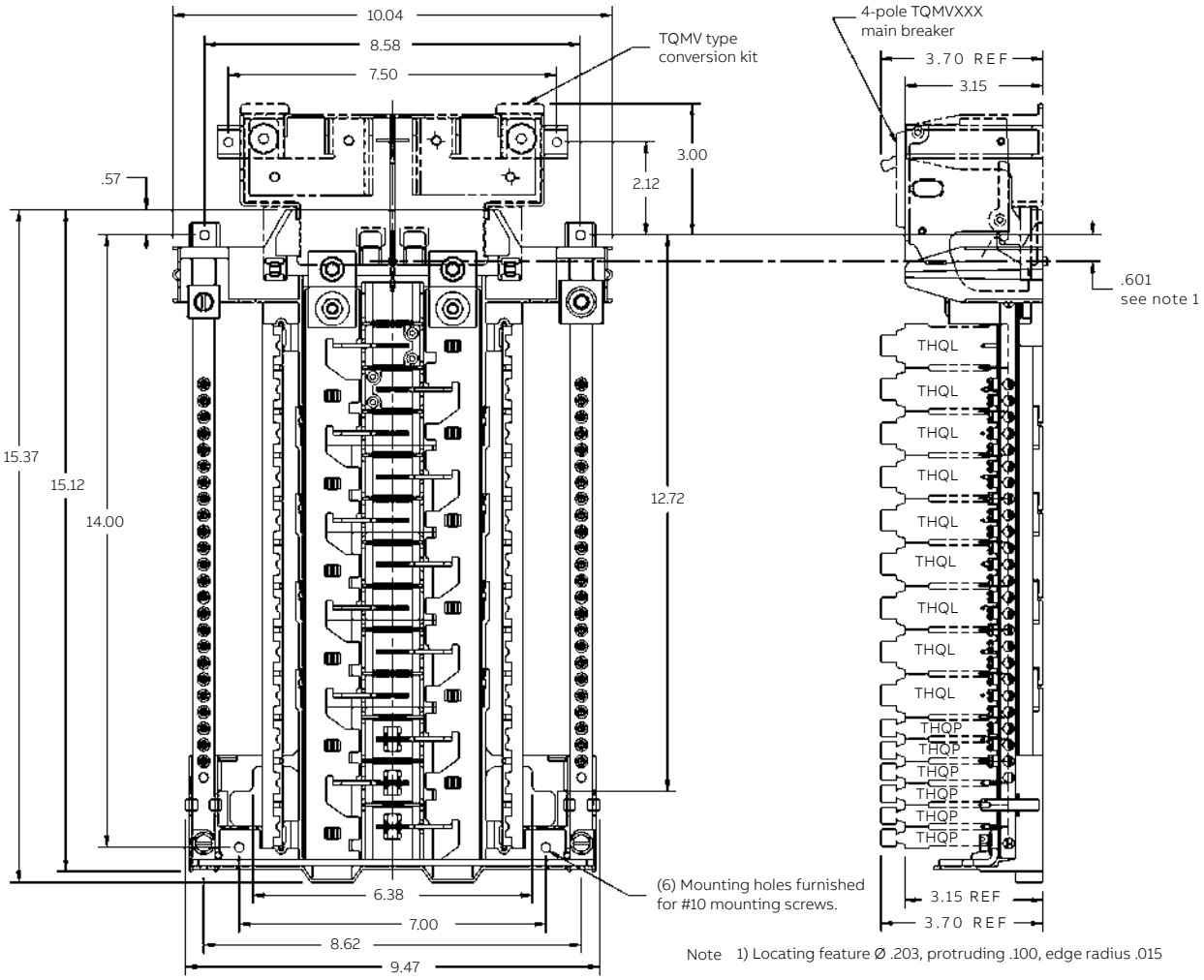

Note 1) Locating feature Ø .203, protruding .100, edge radius .015

—

OEM interiors are UL-recognized components listed under UL file E21790

Main ampere rating	Maximum spaces				Total 1-pole spaces	Main breaker conv kit
	1" THQL		1/2" THQL			
	1-pole	2-pole	1-pole	2-pole		
150	24	12	12	4	30	THQMV150E

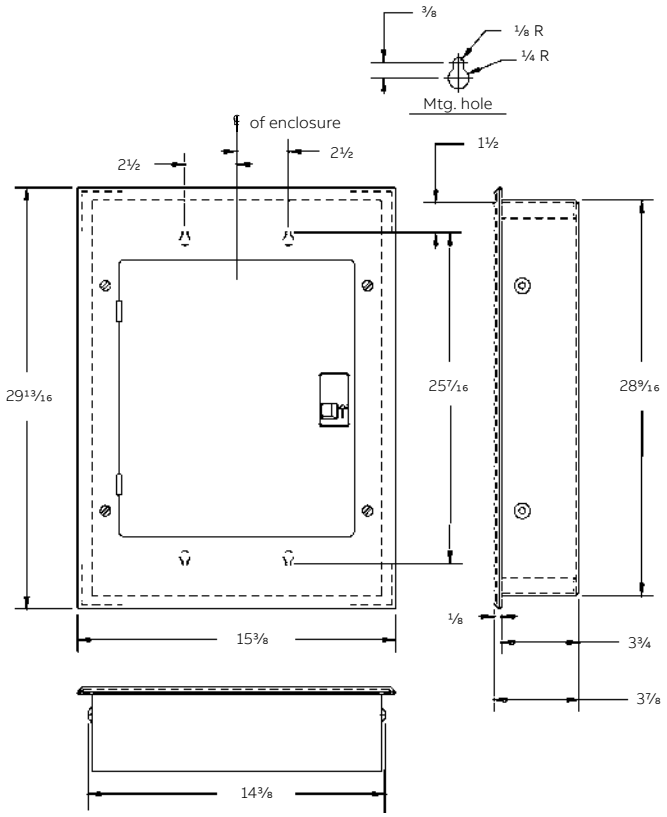

Features

- UL listed (panelboards no. 67)
- 60° C and 75° C conductor rating.
- 22,000 amperes RMS symmetrical short-circuit rating.

Equipment ground terminations

Solid, AWG	Stranded, AWG
14–4 Cu	14–4 Cu
12–10 Al	12–4 Al

Neutral terminations

Solid, AWG	Stranded, AWG
14–10 Cu	14–4 Cu
12–10 Al	12–4 Al

Wire sizes

Line	Neutral lugs
1–2/0 Cu	
2/0–3/0 Al	6–2/0 Cu-Al

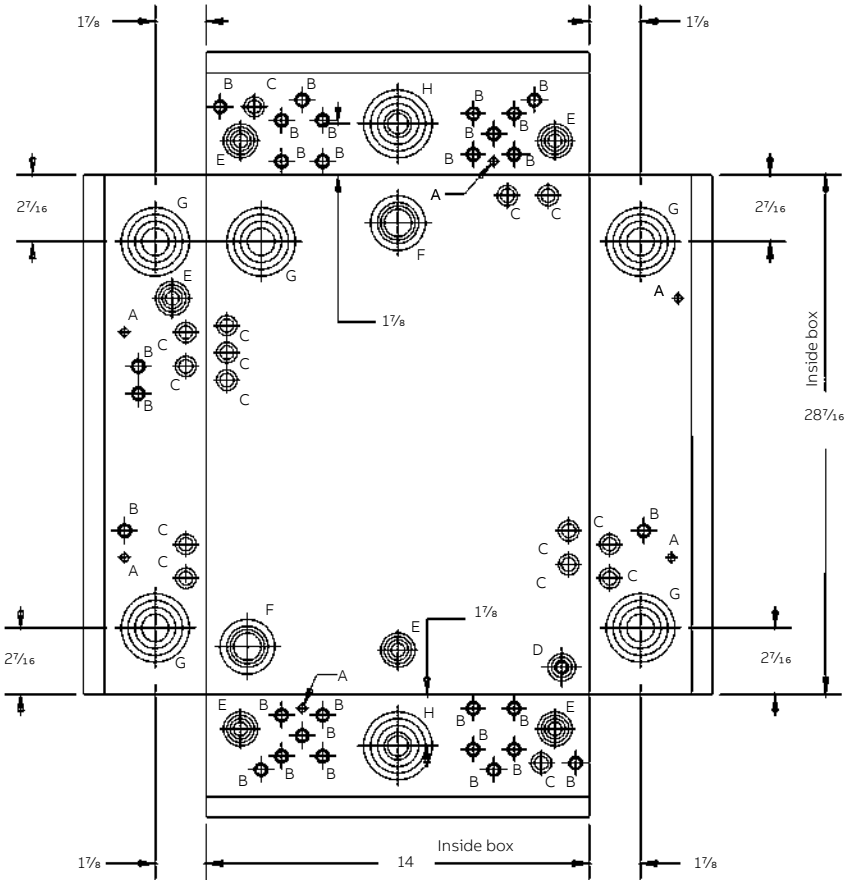

Knockout diagram

SYM	Description
A	9/32 K.O.
B	3/8 × 1/2 K.O.
C	1/2 × 3/4 K.O.
D	3/8 × 1/2 × 3/4 × 1 K.O.
E	1/2 × 3/4 × 1 × 1 1/4 K.O.
F	1× 1 1/2 × 2 × 2 1/2 K.O.
G	1 X 1 1/2 X 2 X 2 1/2 K.0.
H	3/4 X 1 X 1 1/4 X 1 1/2 X 2 X 2 1/2 K.0.

Note: All K.O. locating dimensions are inside of box.

TLM1620U2

Part number	Description	Min. qty.	Master pack qty.
Interior assembly			
TLM1620U2	Interior, 16 circuit, 200 A, Cu	1	10
THDWRKIT2	Interior mounting screw kit	10	10
Front assembly			
TM16GC	Assembly, front and pan	1	1
139C5515P3	Door	1	1
192A6597P1	Hinge	3	1200
THDWRKIT	Front mounting screw kit	20	20
Box assembly			
LC1620BOX	Box assembly	1	24
Accessories			
TBS	Bonding screw kit	1	1
TGK32	Equipment ground kit	1	1

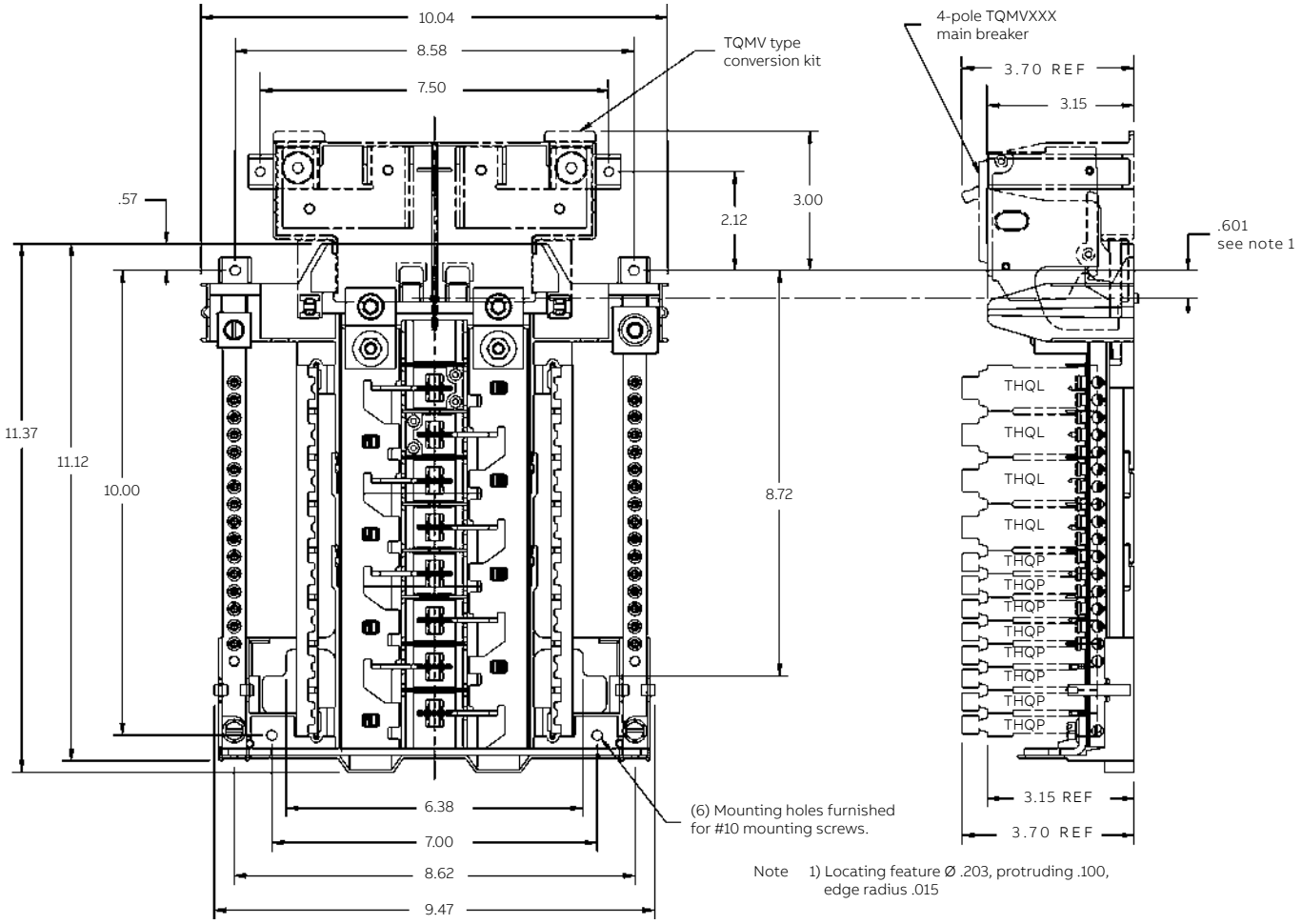

—

OEM interiors are UL-recognized components listed under UL file E21790

Main ampere rating	Maximum spaces				Total 1-pole spaces	Main breaker conv kit
	1" THQL		1/2" THQL			
	1-pole	2-pole	1-pole	2-pole		
150	16	8	32	16	32	THQMV200E

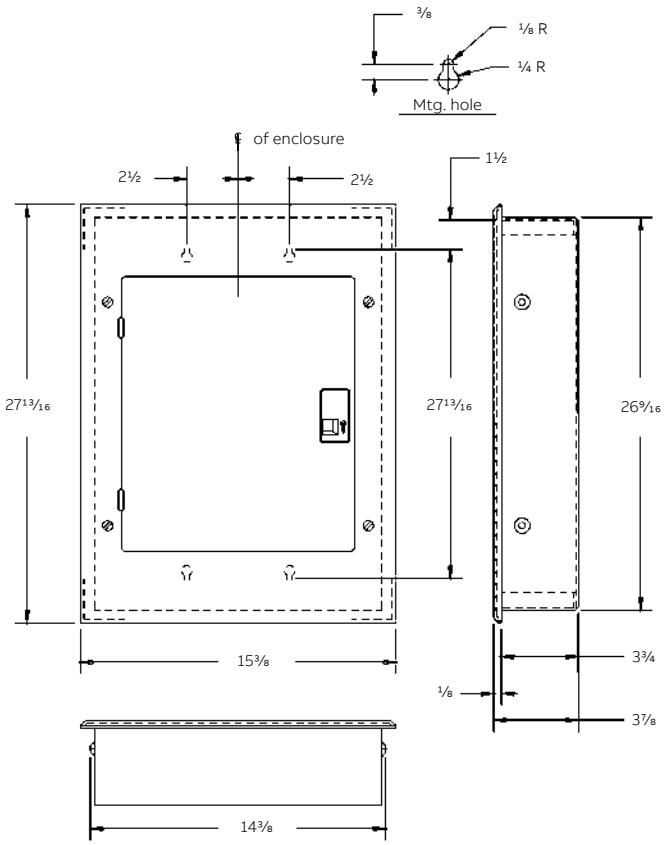

Features

- UL listed (panelboards no. 67)
- 60° C and 75° C conductor rating.
- 22,000 amperes RMS symmetrical short-circuit rating.

Equipment ground terminations

Solid, AWG	Stranded, AWG
14–4 Cu	14–4 Cu
12–10 Al	12–4 Al

Neutral terminations

Solid, AWG	Stranded, AWG
14–10 Cu	14–4 Cu
12–10 Al	12–4 Al

Wire sizes

Line	Neutral lugs
1–250 Cu	
2/0–250 Al	6–2/0 Cu-Al

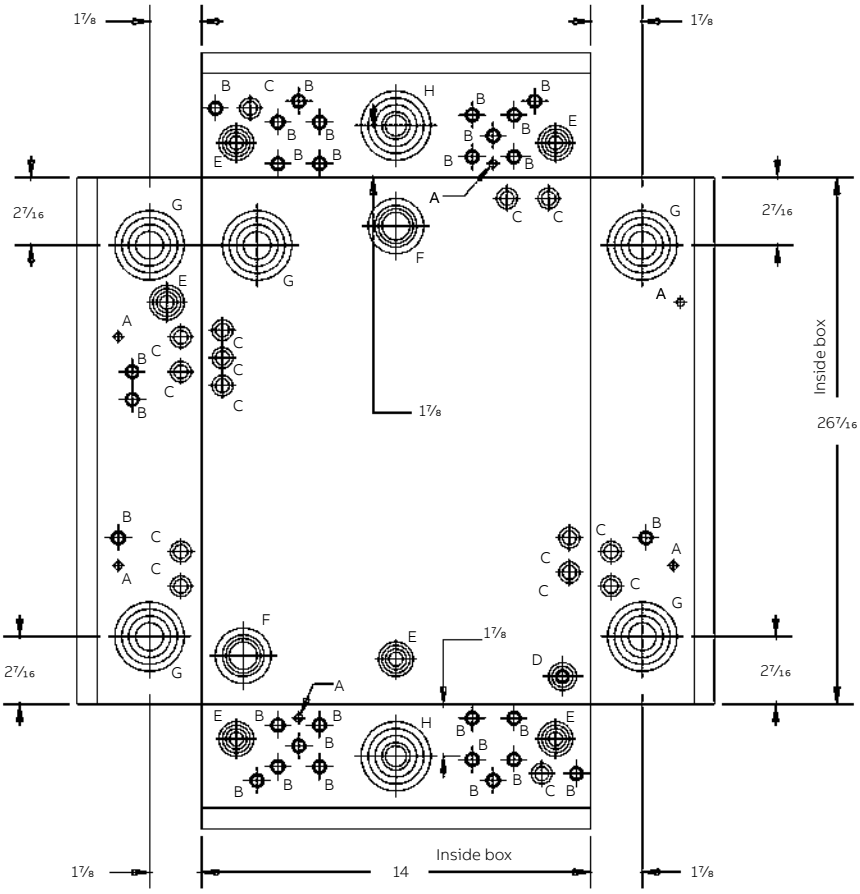

Knockout diagram	
SYM	**Description**
A	9/32 K.O.
B	3/8 × 1/2 K.O.
C	1/2 × 3/4 K.O.
D	3/8 × 1/2 × 3/4 × 1 K.O.
E	1/2 × 3/4 × 1 × 1 1/4 K.O.
F	1× 1 1/2 × 2 × 2 1/2 K.O.
G	1 X 1 1/2 X 2 X 2 1/2 K.0.
H	3/4 X 1 X 1 1/4 X 1 1/2 X 2 X 2 1/2 K.0.

Note: All K.O. locating dimensions are inside of box.

TLM2020U2

Part number	Description	Min. qty.	Master pack qty.
Interior assembly			
TLM2020U2	Interior, 20 circuit, 200 A, Cu	1	10
THDWRKIT2	Interior mounting screw kit	10	10
Front assembly			
TM20EC	Assembly, front and pan	1	1
139C5515P3	Door	1	1
192A6597P1	Hinge	3	1200
THDWRKIT	Front mounting screw kit	20	20
Box assembly			
LC2015BOX	Box assembly	1	24
Accessories			
TBS	Bonding screw kit	1	1
TGK24, TGK42	Equipment ground kit	1	1

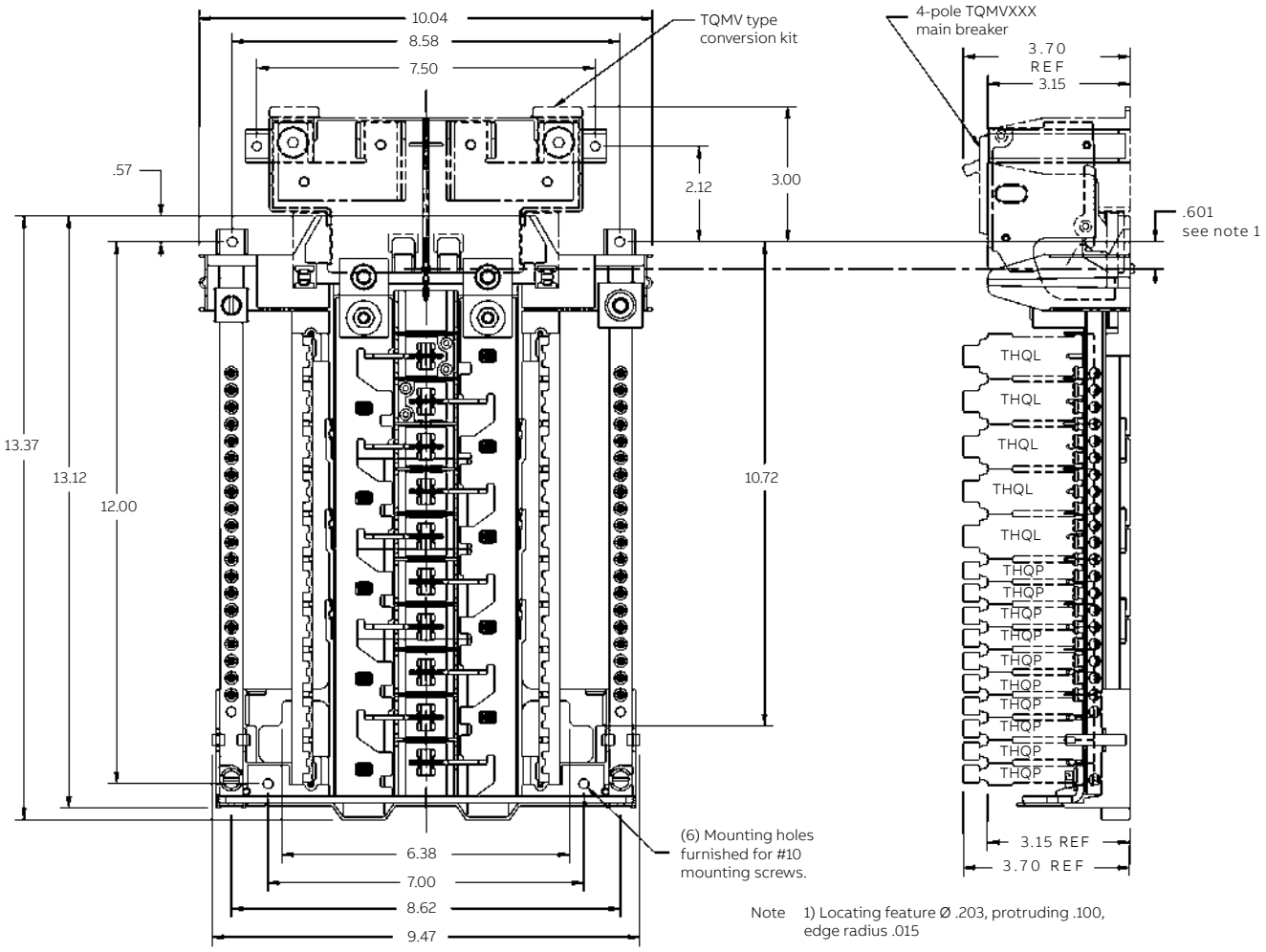

Note 1) Locating feature Ø .203, protruding .100, edge radius .015

—

OEM interiors are UL-recognized components listed under UL file E21790

Main ampere rating	Maximum spaces				Total 1-pole spaces	Main breaker conv kit
	1" THQL		1/2" THQL			
	1-pole	2-pole	1-pole	2-pole		
200	20	10	40	18	40	THQMV200E

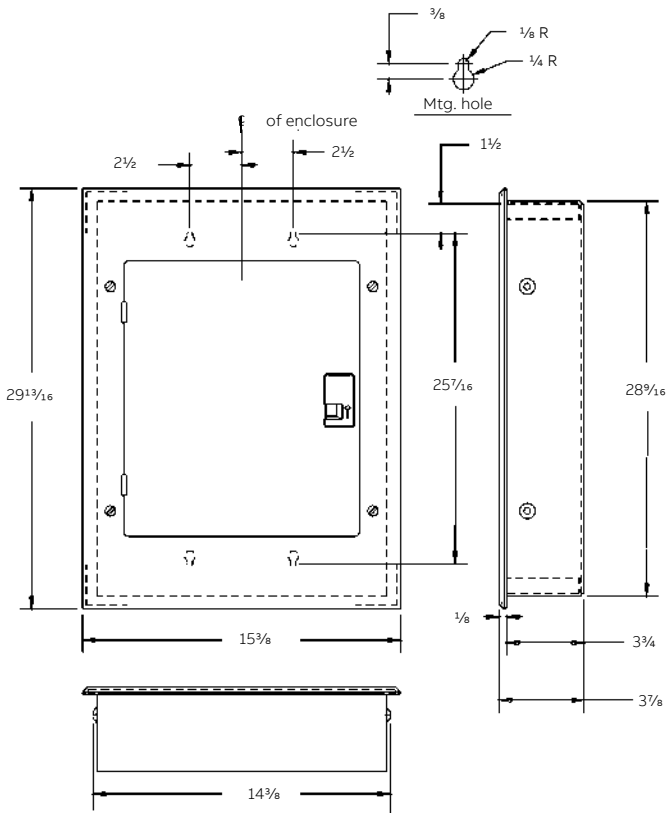

Features

- UL listed (panelboards no. 67)
- 60° C and 75° C conductor rating.
- 22,000 amperes RMS symmetrical short-circuit rating.

Equipment ground terminations

Solid, AWG	Stranded, AWG
14–4 Cu	14–4 Cu
12–10 Al	12–4 Al

Neutral terminations

Solid, AWG	Stranded, AWG
14–10 Cu	14–4 Cu
12–10 Al	12–4 Al

Wire sizes

Line	Neutral lugs
1–250 Cu	
2/0–250 Al	6–2/0 Cu-Al

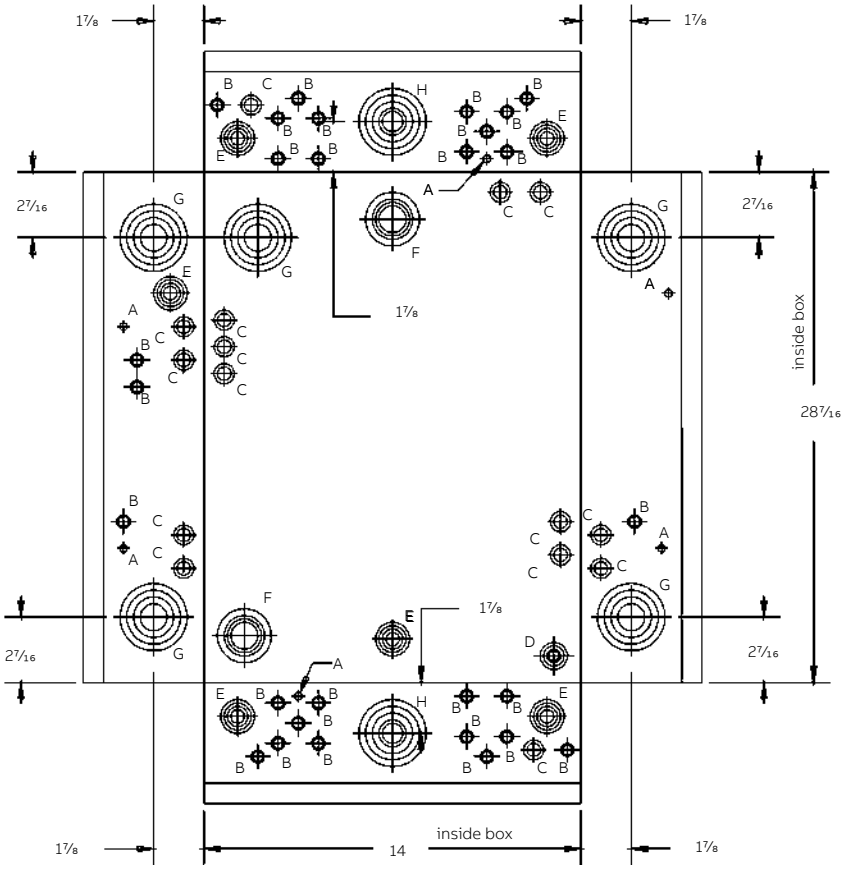

Knockout diagram	
SYM	**Description**
A	9/32 K.O.
B	3/8 × 1/2 K.O.
C	1/2 × 3/4 K.O.
D	3/8 × 1/2 × 3/4 × 1 K.O.
E	1/2 × 3/4 × 1 × 1 1/4 K.O.
F	1× 1 1/2 × 2 × 2 1/2 K.O.
G	1 X 1 1/2 X 2 X 2 1/2 K.0.
H	3/4 X 1 X 1 1/4 X 1 1/2 X 2 X 2 1/2 K.0.

Note: All K.O. locating dimensions are inside of box.

TLM3220U2

Part number	Description	Min. qty.	Master pack qty.
Interior assembly			
TLM3220U2	Interior, 32 circuit, 200 A, Cu	1	10
THDWRKIT2	Interior mounting screw kit	10	10
Front assembly			
TM32FC	Assembly, front and pan	1	1
139C5515P5	Door	1	1
192A6597P1	Hinge	3	1200
THDWRKIT	Front mounting screw kit	20	20
Box assembly			
LC3220BOX	Box assembly	1	24
Accessories			
TBS	Bonding screw kit	1	1
TGK32	Equipment ground kit	1	1

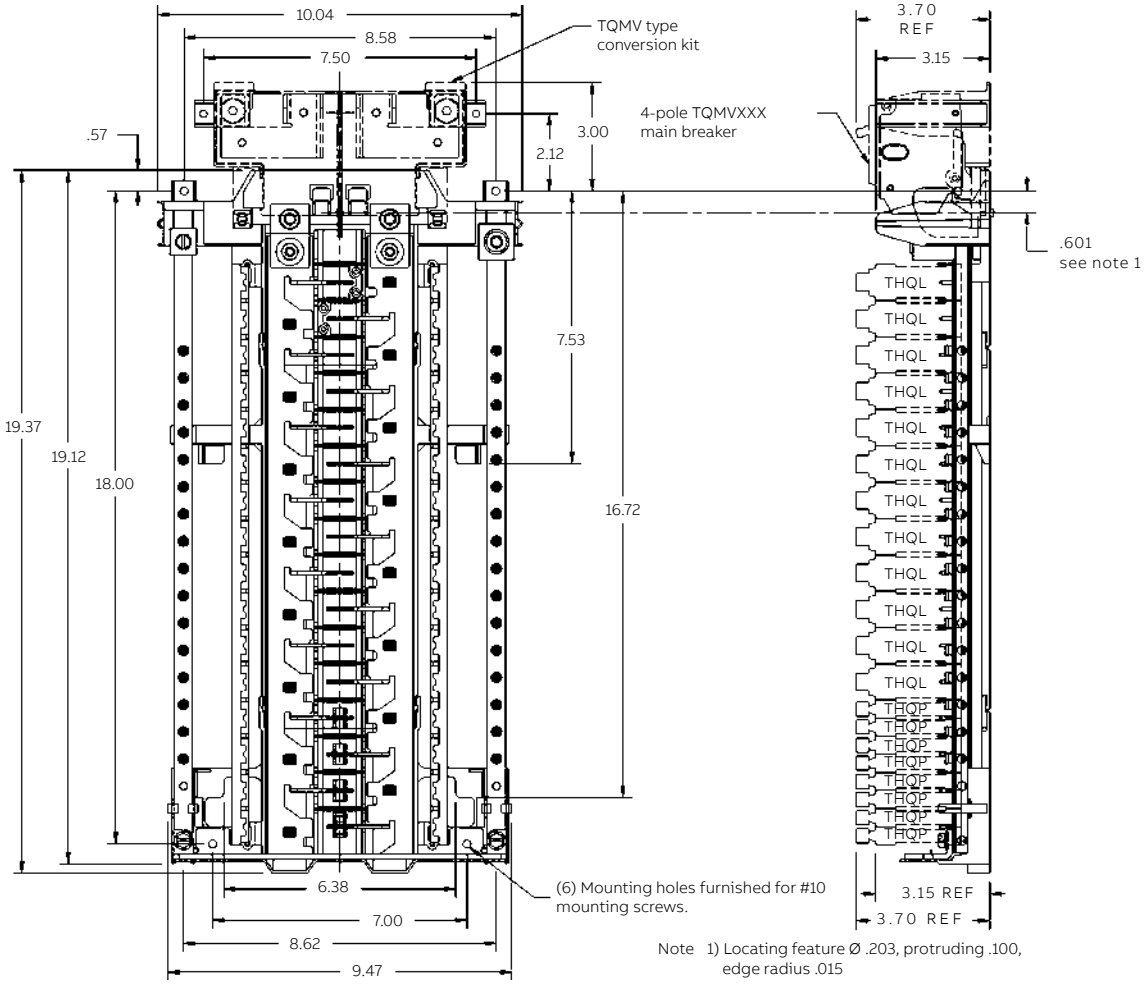

—

OEM interiors are UL-recognized components listed under UL file E21790

Main ampere rating	Maximum spaces				Total 1-pole spaces	Main breaker conv kit
	1" THQL		1/2" THQL			
	1-pole	2-pole	1-pole	2-pole		
200	32	16	16	6	40	THQMV200E

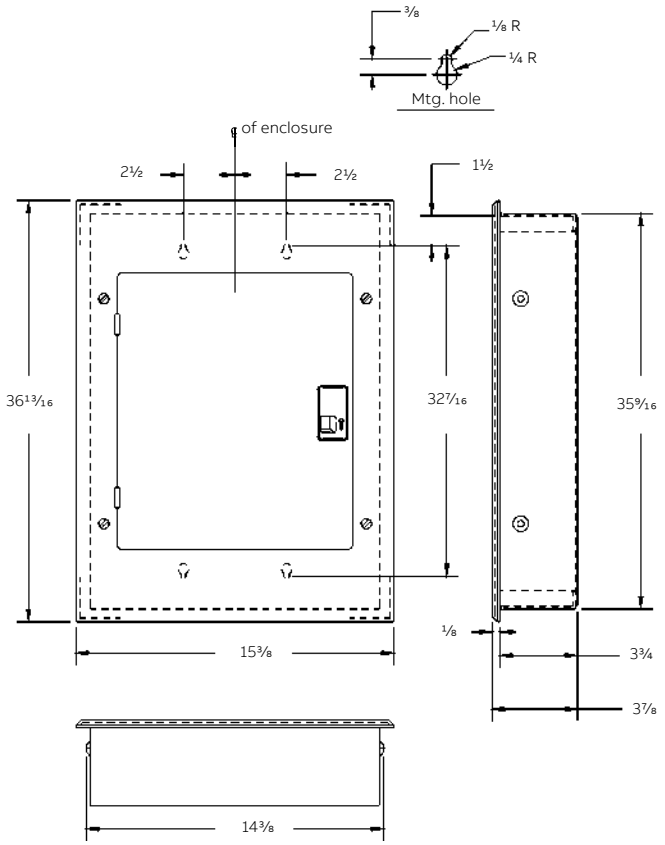

Features

- UL listed (panelboards no. 67)
- 60° C and 75° C conductor rating.
- 22,000 amperes RMS symmetrical short-circuit rating.

Equipment ground terminations

Solid, AWG	Stranded, AWG
14–4 Cu	14–4 Cu
12–10 Al	12–4 Al

Neutral terminations

Solid, AWG	Stranded, AWG
14–10 Cu	14–4 Cu
12–10 Al	12–4 Al

Wire sizes

Line	Neutral lugs
1–250 Cu	
2/0–250 Al	6–2/0 Cu-Al

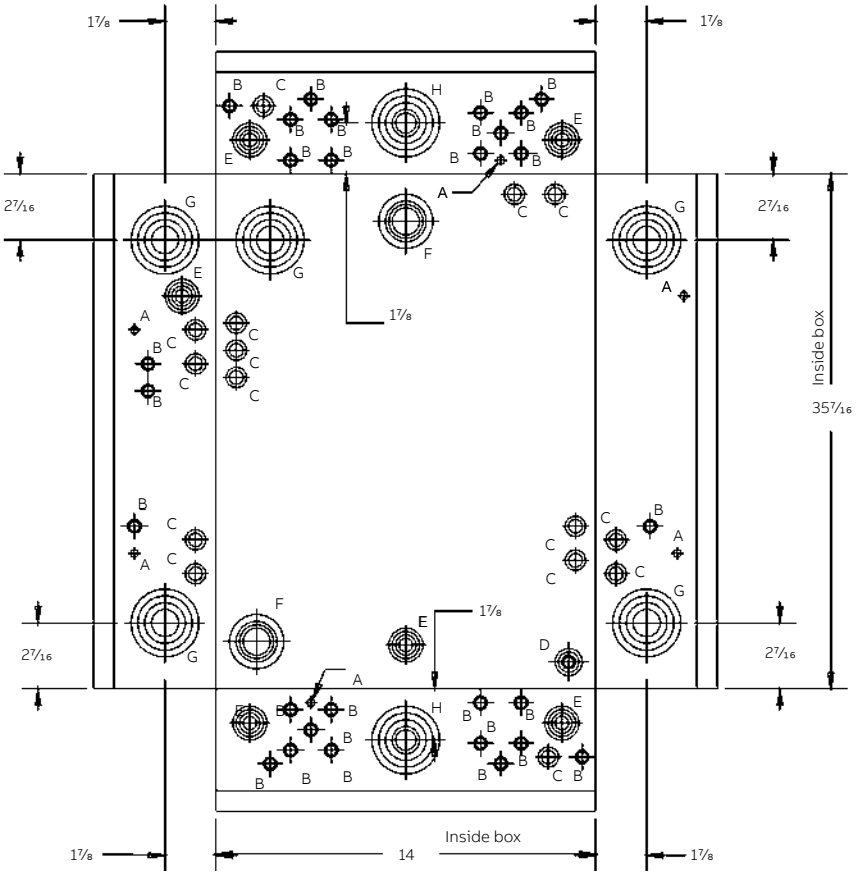

Knockout diagram

SYM	Description
A	9/32 K.O.
B	3/8 × 1/2 K.O.
C	1/2 × 3/4 K.O.
D	3/8 × 1/2 × 3/4 × 1 K.O.
E	1/2 × 3/4 × 1 × 1 1/4 K.O.
F	1× 1 1/2 × 2 × 2 1/2 K.O.
G	1 X 1 1/2 X 2 X 2 1/2 K.0.
H	3/4 X 1 X 1 1/4 X 1 1/2 X 2 X 2 1/2 K.0.

Note: All K.O. locating dimensions are inside of box.

TLM4222U2

Part number	Description	Min. qty.	Master pack qty.
Interior assembly			
TLM4222U2	Interior, 42 circuit, 225 A, Cu	1	6
THDWRKIT2	Interior mounting screw kit	10	10
Front assembly			
TM42BC	Assembly, front and pan	1	1
139C5515P5	Door	1	1
192A6597P1	Hinge	3	1200
THDWRKIT	Front mounting screw kit	20	20
Box assembly			
LC4222BOX	Box assembly	1	16
Accessories			
TBS	Bonding screw kit	1	1
TGK42	Equipment ground kit	1	1

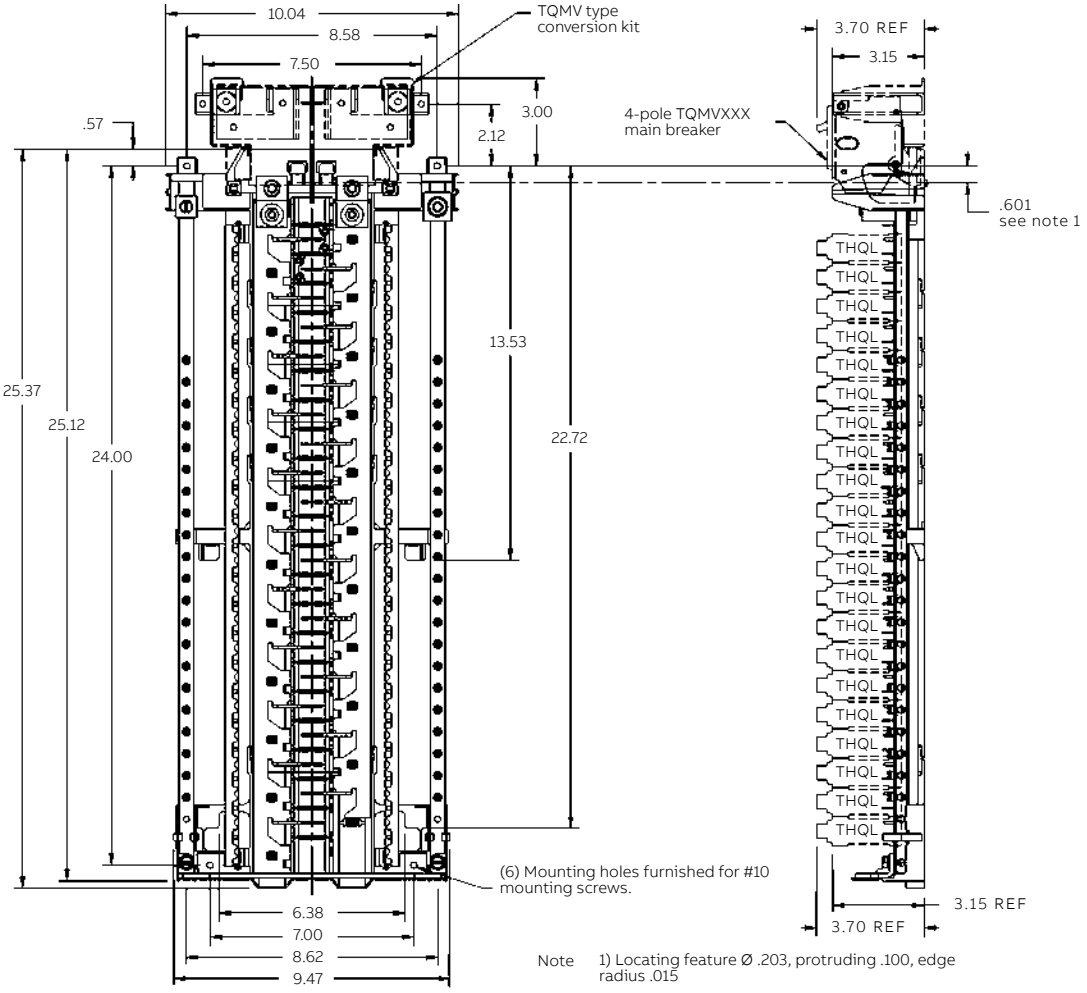

—

OEM interiors are UL-recognized components listed under UL file E21790

	Maximum spaces					
	1" THQL		1/2" THQL			
Main ampere rating	**1-pole**	**2-pole**	**1-pole**	**2-pole**	**Total 1-pole spaces**	**Main breaker conv kit**
225	42	20	-	-	42	THQMV225E

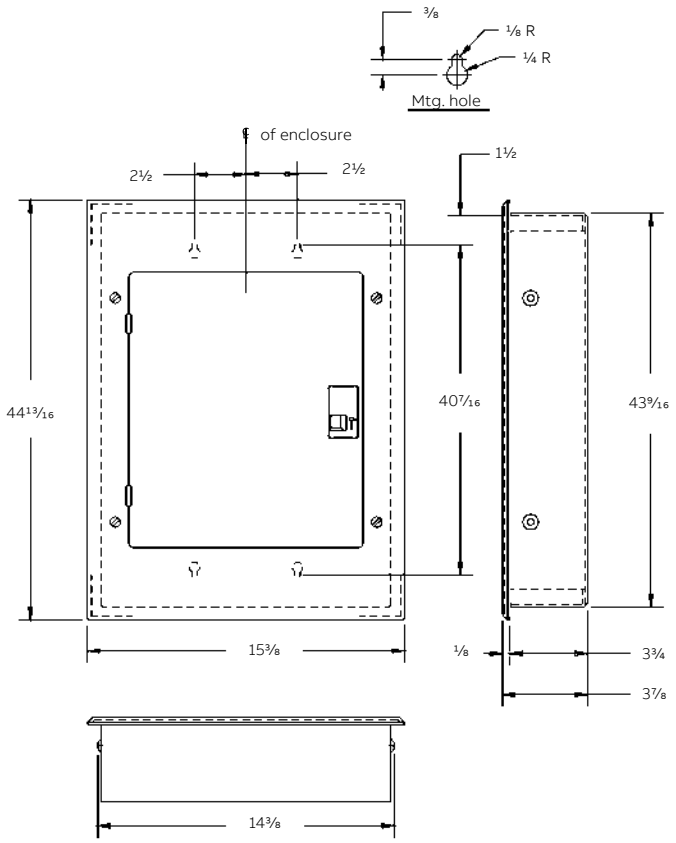

Features

- UL listed (panelboards no. 67)
- 60° C and 75° C conductor rating.
- 22,000 amperes RMS symmetrical short-circuit rating.

Equipment ground terminations

Solid, AWG	Stranded, AWG
14–4 Cu	14–4 Cu
12–10 Al	12–4 Al

Neutral terminations

Solid, AWG	Stranded, AWG
14–10 Cu	14–4 Cu
12–10 Al	12–4 Al

Wire sizes

Line	Neutral lugs
1–250 Cu	
2/0–250 Al	6–2/0 Cu-Al

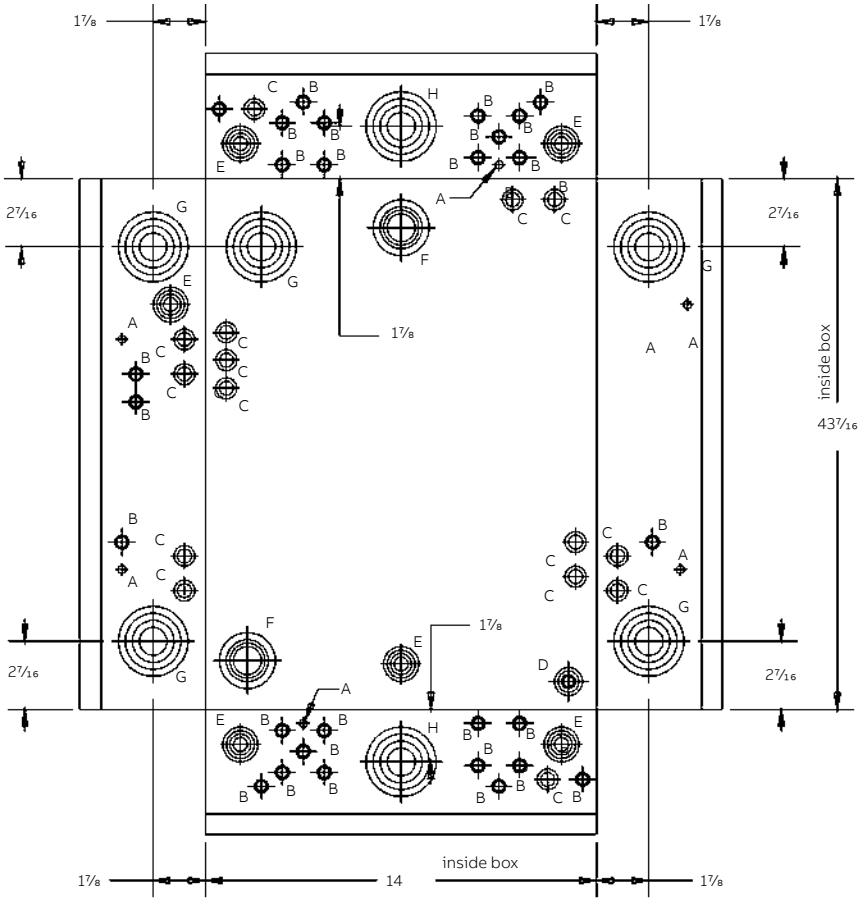

Knockout diagram	
SYM	**Description**
A	9/32 K.O.
B	3/8 × 1/2 K.O.
C	1/2 × 3/4 K.O.
D	3/8 × 1/2 × 3/4 × 1 K.O.
E	1/2 × 3/4 × 1 × 1 1/4 K.O.
F	1× 1 1/2 × 2 × 2 1/2 K.O.
G	1 X 1 1/2 X 2 X 2 1/2 K.0.
H	3/4 X 1 X 1 1/4 X 1 1/2 X 2 X 2 1/2 K.0.

Note: All K.O. locating dimensions are inside of box.

PowerMark Plus™ load center parts

TL12412U

Part number	Description	Min. qty.	Master pack qty.
Interior assembly			
TL12412U	Interior, 12 circuit, 3-phase, 125 A, MLO	1	10
THDWRKIT2	Interior mounting screw kit	10	10
Front assembly			
TL12AC3	Assembly, front and pan	1	1
139C5515P2	Door	1	1
192A6597P1	Hinge	3	1200
THDWRKIT	Front mounting screw kit	20	20
Box assembly			
LC1212BOX	Box assembly	1	40
Accessories			
TBS	Bonding screw kit	1	1
TGK12, TGK24	Equipment ground kit	1	1

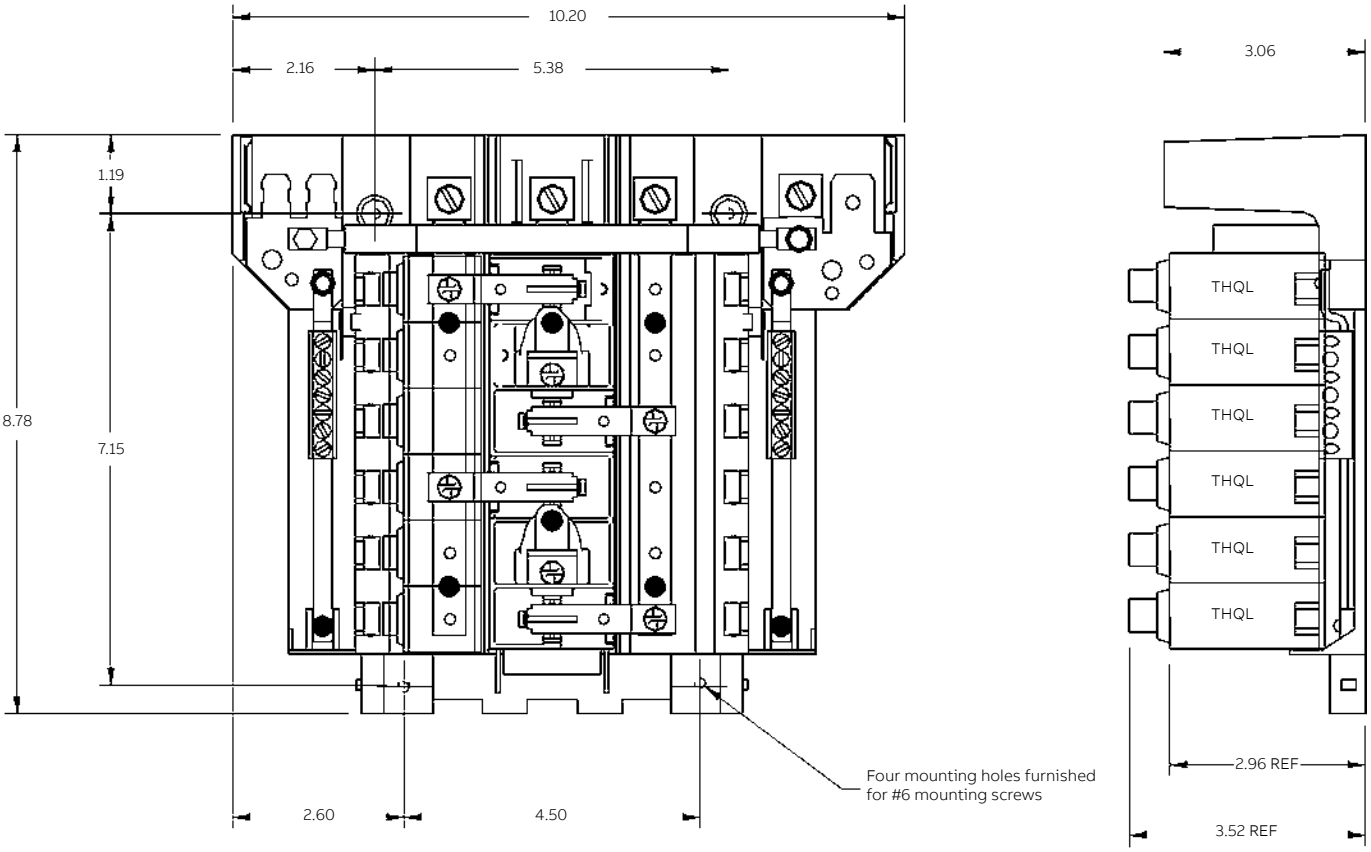

—
OEM interiors are UL-recognized components listed under UL file E21790

	Maximum spaces			
	1" THQL			
Main ampere rating	**1-pole**	**2-pole**	**3-pole**	**Total 1-pole spaces**
125	12	6	4	12

Alternate backfed main breaker rating: 100 A max.
THQL style Main breaker retainer required: THQLRK

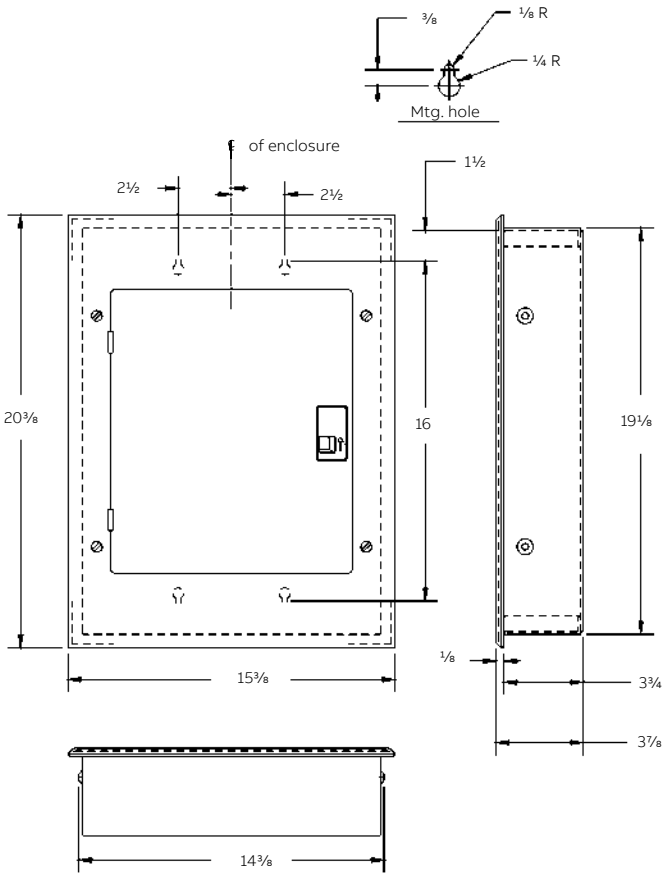

Features

- UL listed (panelboards no. 67)
- 60° C and 75° C conductor rating.
- 22,000 amperes RMS symmetrical short-circuit rating.

Equipment ground terminations

Solid, AWG	Stranded, AWG
14–4 Cu	14–4 Cu
12–10 Al	12–4 Al

Neutral terminations

Solid, AWG	Stranded, AWG
14–8 Cu	12–4 Cu
12–8 Al	12–4 Al

Wire sizes

Line	Neutral lugs
6–2/0 Cu-Al	6–2/0 Cu-Al

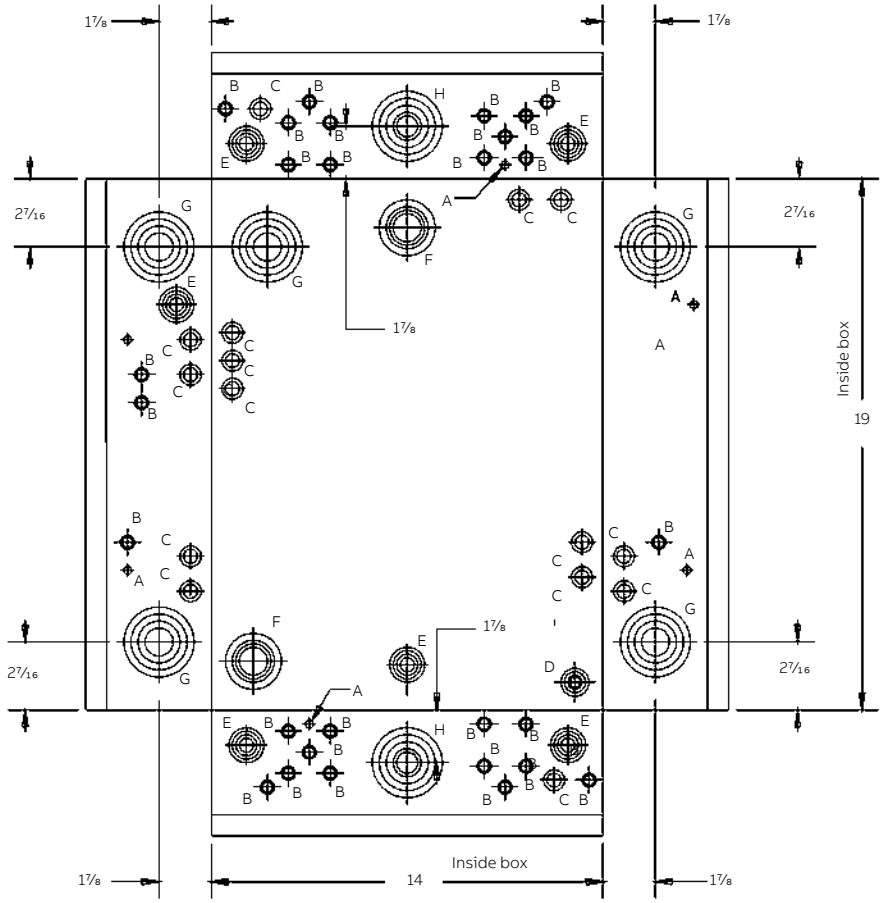

Knockout diagram	
SYM	**Description**
A	9/32 K.O.
B	3/8 × 1/2 K.O.
C	1/2 × 3/4 K.O.
D	3/8 × 1/2 × 3/4 × 1 K.O.
E	1/2 × 3/4 × 1 × 1 1/4 K.O.
F	1× 1 1/2 × 2 × 2 1/2 K.O.
G	1 X 1 1/2 X 2 X 2 1/2 K.0.
H	3/4 1 × 1 1/4 × 1 1/2 × 2 ×2 1/2 K.O.

Note: All K.O. locating dimensions are inside of box.

TL18415U

Part number	Description	Min. qty.	Master pack qty.
Interior assembly			
TL18415U	Interior, 18 circuit, 3-phase, 150 A	1	10
THDWRKIT2	Interior mounting screw kit	10	10
Front assembly			
TL18BC3	Assembly, front and pan	1	1
139C5515P3	Door	1	1
192A6597P1	Hinge	3	1200
THDWRKIT	Front mounting screw kit	20	20
Box assembly			
LC24415BOX	Box assembly	1	24
Accessories			
TBS	Bonding screw kit	1	1
TGK24, TGK32	Equipment ground kit	1	1

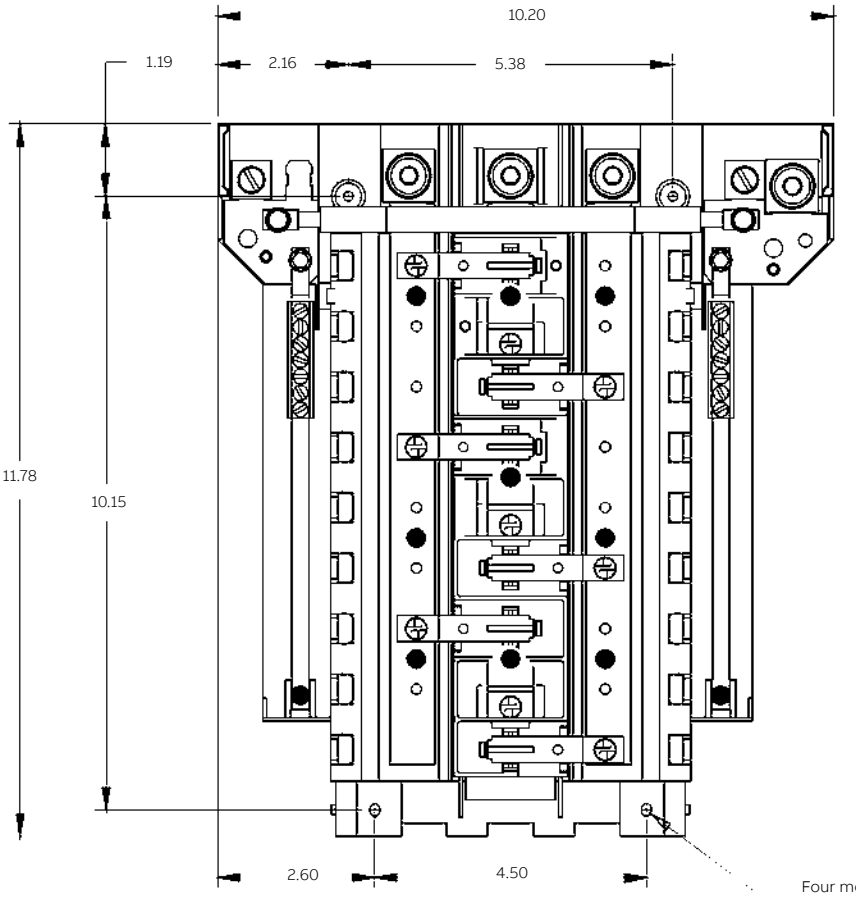

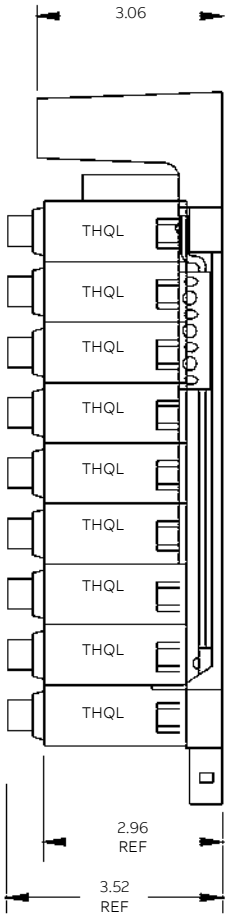

—

OEM interiors are UL-recognized components listed under UL file E21790

	Maximum spaces			
	1" THQL			
Main ampere rating	**1-pole**	**2-pole**	**3-pole**	**Total 1-pole spaces**
150	18	8	6	18

Alternate backfed main breaker rating: 100 A max.
Main breaker retainer required: THQLRK

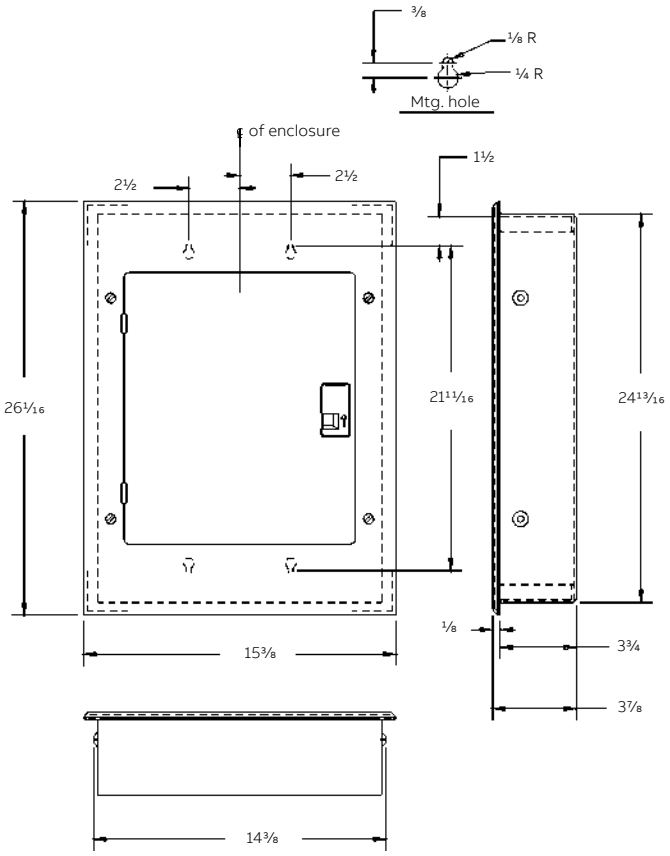

Features

- UL listed (panelboards no. 67)
- 60° C and 75° C conductor rating.
- 22,000 amperes RMS symmetrical short-circuit rating.

Equipment ground terminations

Solid, AWG	Stranded, AWG
14–4 Cu	14–4 Cu
12–10 Al	12–4 Al

Neutral terminations

Solid, AWG	Stranded, AWG
14–8 Cu	12–4 Cu
12–8 Al	12–4 Al

Wire sizes

Line	Neutral lugs
1–3/0 Cu	
2/0–3/0 Al	6–2/0 Cu-Al

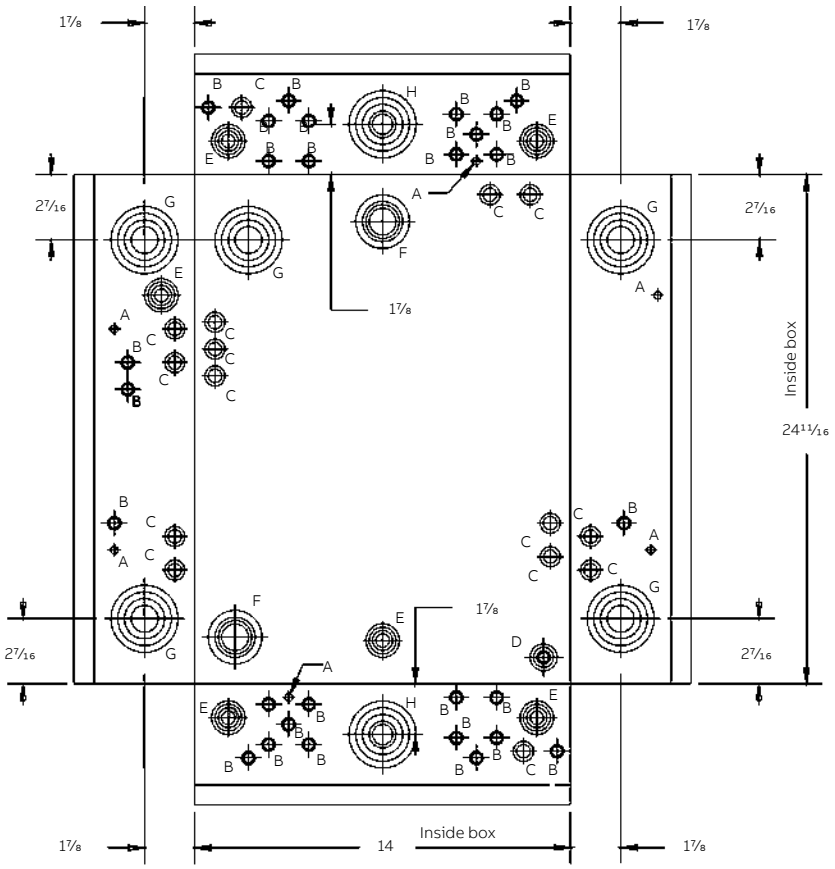

Knockout diagram

SYM	Description
A	9/32 K.O.
B	3/8 × 1/2 K.O.
C	1/2 × 3/4 K.O.
D	3/8 × 1/2 × 3/4 × 1 K.O.
E	1/2 × 3/4 × 1 × 1 1/4 K.O.
F	1× 1 1/2 × 2 × 2 1/2 K.O.
G	1 X 1 1/2 X 2 X 2 1/2 K.0.
H	3/4 X 1 X 1 X 1 1/4 X 1 1/2 x 2 x 2 1/2 K.O.

Note: All K.O. locating dimensions are inside of box.

TL24415U

Part number	Description	Min. qty.	Master pack qty.
Interior assembly			
TL24415U	Interior, 24 circuit, 3-phase, 150 A	1	10
THDWRKIT2	Interior mounting screw kit	10	10
Front assembly			
TL24AC3	Assembly, front and pan	1	1
139C5515P3	Door	1	1
192A6597P1	Hinge	3	1200
THDWRKIT	Front mounting screw kit	20	20
Box assembly			
LC24415BOX	Box assembly	1	24
Accessories			
TBS	Bonding screw kit	1	1
TGK24, TGK32	Equipment ground kit	1	1

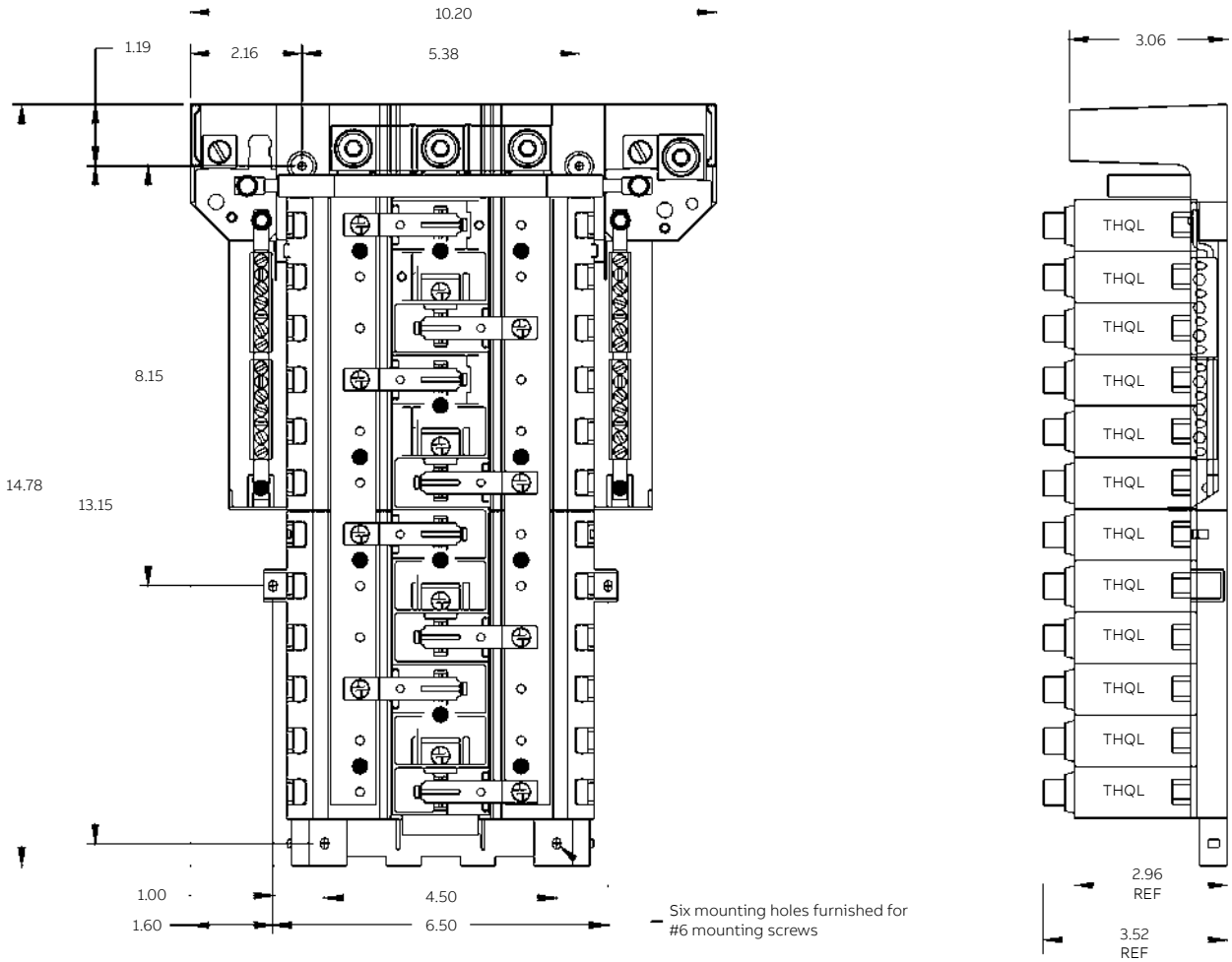

OEM interiors are UL-recognized components listed under UL file E21790

	Maximum spaces			
	1" THQL			
Main ampere rating	**1-pole**	**2-pole**	**3-pole**	**Total 1-pole spaces**
150	24	12	8	24

Alternate backfed main breaker rating: 100 A max.
Main breaker retainer required: THQLRK

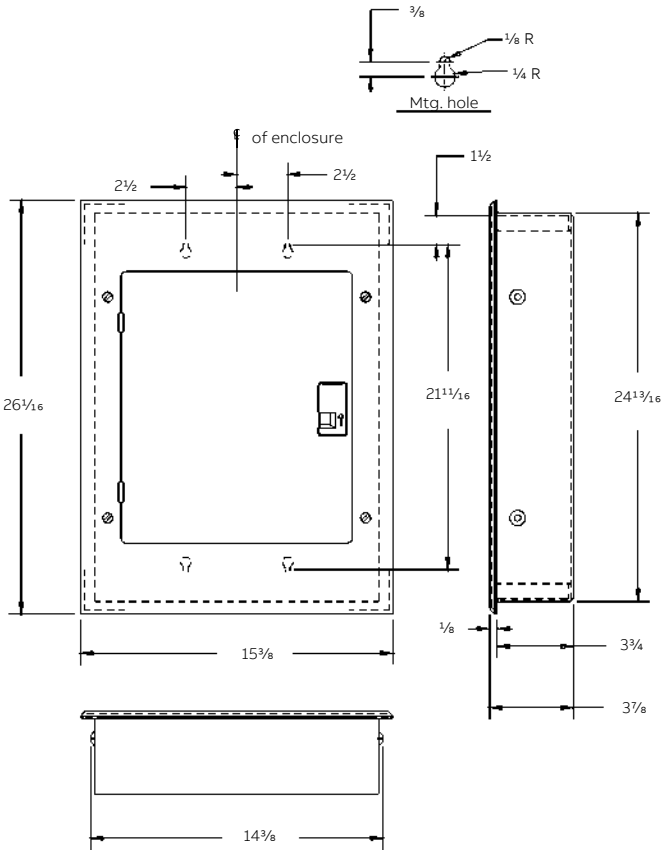

Features

- UL listed (panelboards no. 67)
- 60° C and 75° C conductor rating.
- 22,000 amperes RMS symmetrical short-circuit rating.

Equipment ground terminations

Solid, AWG	Stranded, AWG
14–4 Cu	14–4 Cu
12–10 Al	12–4 Al

Neutral terminations

Solid, AWG	Stranded, AWG
14–8 Cu	12–4 Cu
12–8 Al	12–4 Al

Wire sizes

Line	Neutral lugs
1–3/0 Cu	
2/0–3/0 Al	6–2/0 Cu-Al

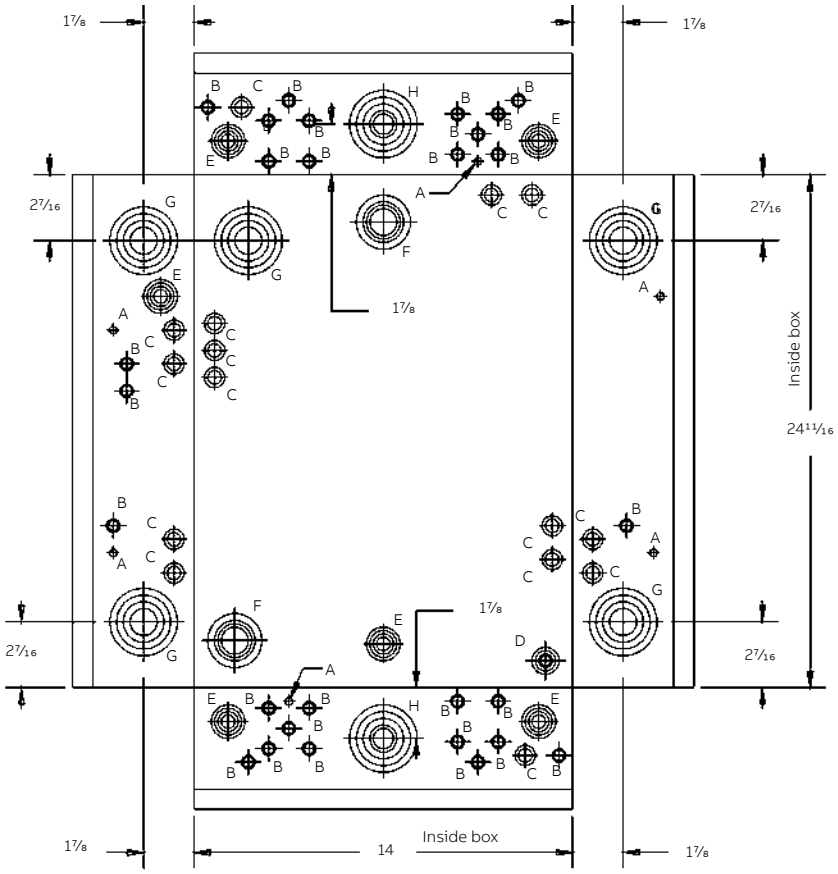

Knockout diagram	
SYM	**Description**
A	9/32 K.O.
B	3/8 × 1/2 K.O.
C	1/2 × 3/4 K.O.
D	3/8 × 1/2 × 3/4 × 1 K.O.
E	1/2 × 3/4 × 1 × 1 1/4 K.O.
F	1× 1 1/2 × 2 × 2 1/2 K.O.
G	1 X 1 1/2 X 2 X 2 1/2 K.0.
H	3/4 X 1 X 1 X 1/4 X 1 1/2 x 2 x 2 1/2 K.O.

Note: All K.O. locating dimensions are inside of box.

TL30420U

Part number	Description	Min. qty.	Master pack qty.
Interior assembly			
TL30420U	Interior, 30 circuit, 3-phase, 200 A	1	10
THDWRKIT2	Interior mounting screw kit	10	10
Front assembly			
TL30BC3	Assembly, front and pan	1	1
139C5515P5	Door	1	1
192A6597P1	Hinge	3	1200
THDWRKIT	Front mounting screw kit	20	20
Box assembly			
LC30420BOX	Box assembly	1	24
Accessories			
TBS	Bonding screw kit	1	1
TGK32	Equipment ground kit	1	1

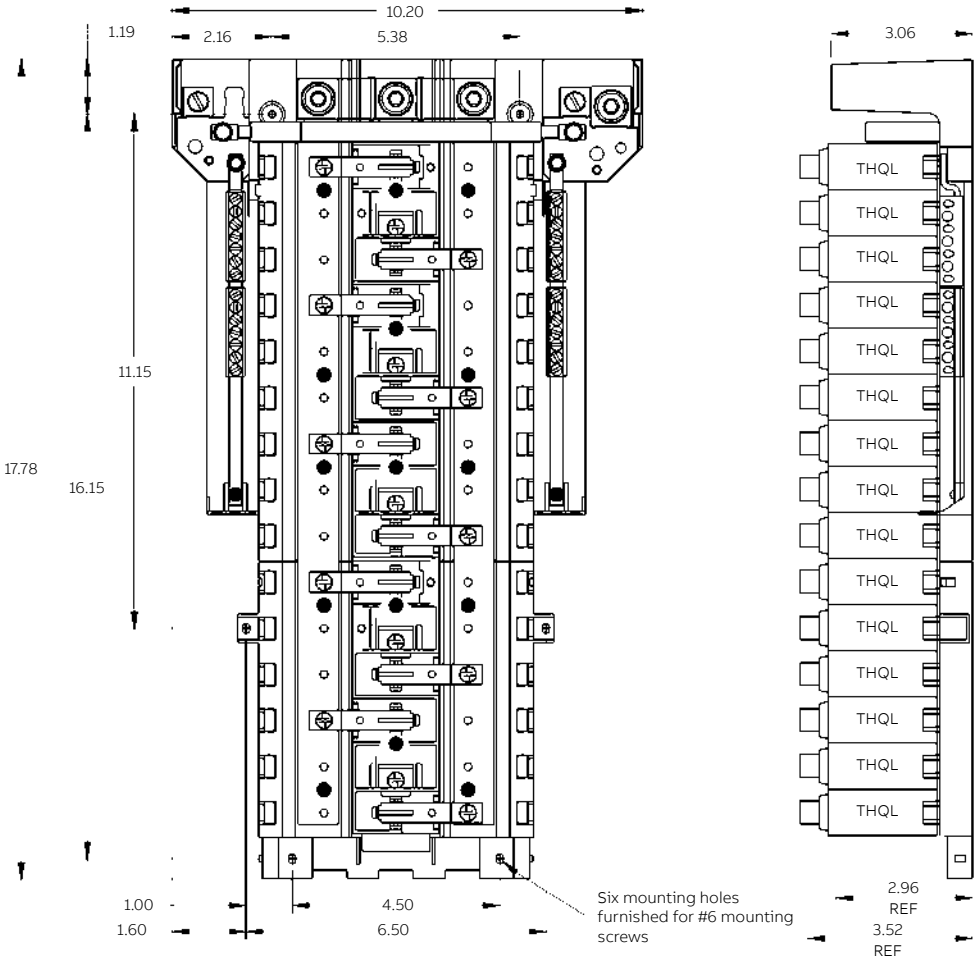

—

OEM interiors are UL-recognized components listed under UL file E21790

	Maximum spaces			
	1" THQL			
Main ampere rating	**1-pole**	**2-pole**	**3-pole**	**Total 1-pole spaces**
200	30	14	10	30

Alternate backfed main breaker rating: 100 A max.
Main breaker retainer required: THQLRK

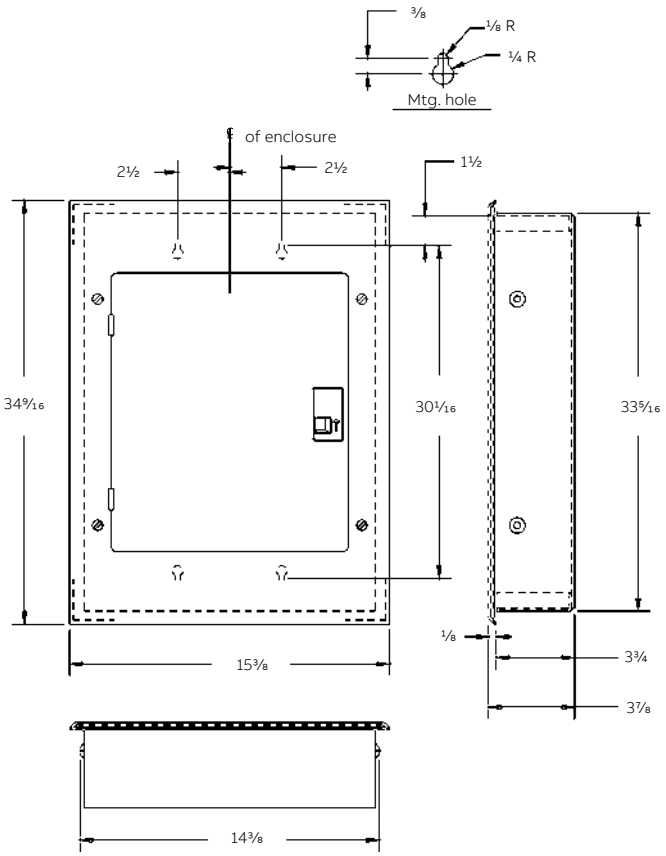

Features

- UL listed (panelboards no. 67)
- 60° C and 75° C conductor rating.
- 22,000 amperes RMS symmetrical short-circuit rating.

Equipment ground terminations

Solid, AWG	Stranded, AWG
14–4 Cu	14–4 Cu
12–10 Al	12–4 Al

Neutral terminations

Solid, AWG	Stranded, AWG
14–8 Cu	12–4 Cu
12–8 Al	12–4 Al

Wire sizes

Line	Neutral lugs
1–250 Cu	
2/0–250 Al	6–2/0 Cu-Al

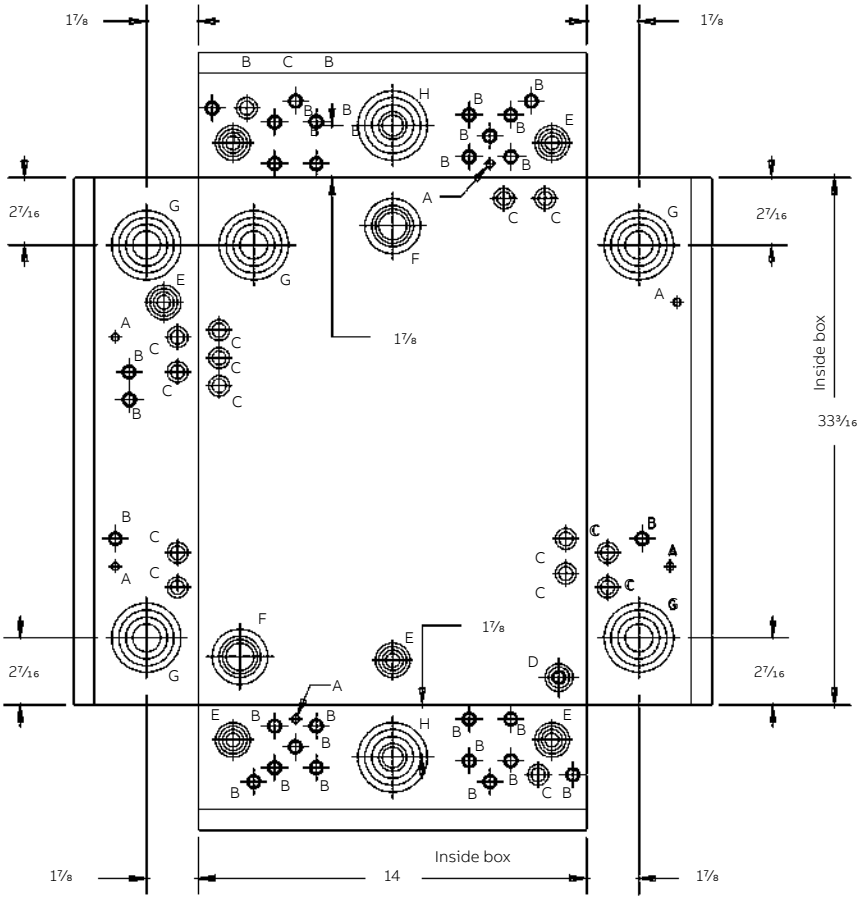

Knockout diagram

SYM	Description
A	9/32 K.O.
B	3/8 × 1/2 K.O.
C	1/2 × 3/4 K.O.
D	3/8 × 1/2 × 3/4 × 1 K.O.
E	1/2 × 3/4 × 1 × 1 1/4 K.O.
F	1× 1 1/2 × 2 × 2 1/2 K.O.
G	1 X 1 1/2 X 2 X 2 1/2 K.0.
H	3/4 X 1 X 1 X 1/4 X 1 1/2 x 2 x 2 1/2 K.O.

Note: All K.O. locating dimensions are inside of box.

TL42420U

Part number	Description	Min. qty.	Master pack qty.
Interior assembly			
TL42420U	Interior, 42 circuit, 3-phase, 200 A	1	10
THDWRKIT2	Interior mounting screw kit	10	10
Front assembly			
TL42BC3	Assembly, front and pan	1	1
139C5515P5	Door	1	1
192A6597P1	Hinge	3	1200
THDWRKIT	Front mounting screw kit	20	20
Box assembly			
LC4020BOX	Box assembly	1	24
Accessories			
TBS	Bonding screw kit	1	1
TGK42	Equipment ground kit	1	1

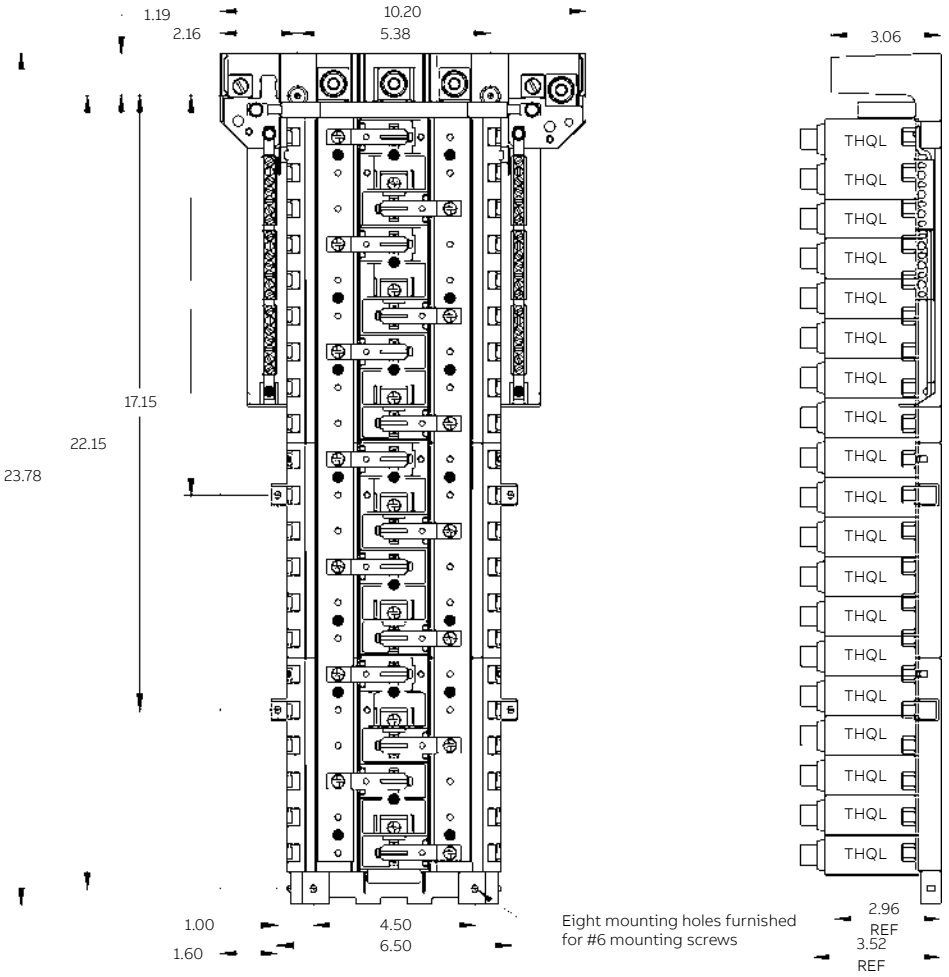

—

OEM interiors are UL-recognized components listed under UL file E21790

	Maximum spaces			
	1" THQL			
Main ampere rating	**1-pole**	**2-pole**	**3-pole**	**Total 1-pole spaces**
200	42	20	14	42

Alternate backfed main breaker rating: 100 A max.
Main breaker retainer required: THQLRK

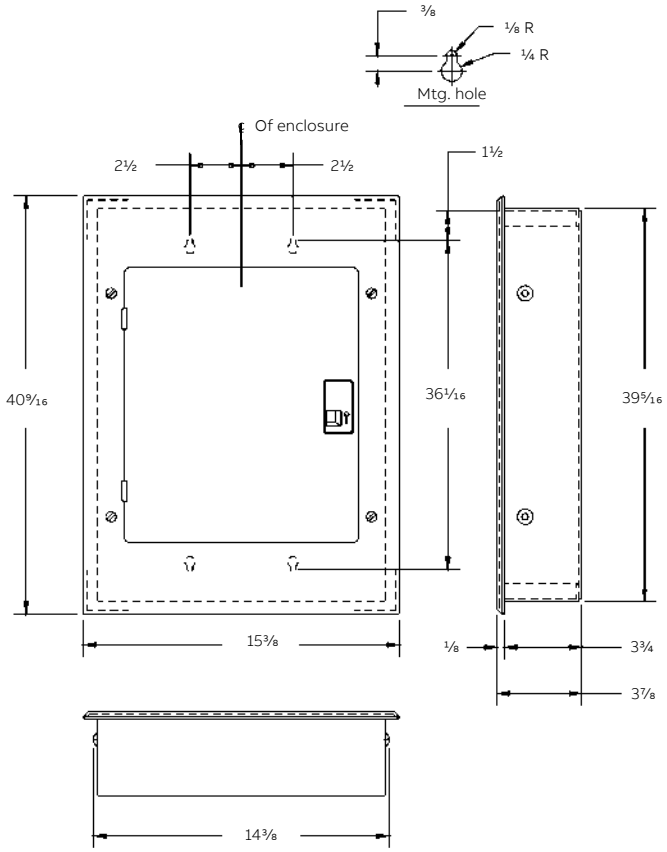

Features

- UL listed (panelboards no. 67)
- 60° C and 75° C conductor rating.
- 22,000 amperes RMS symmetrical short-circuit rating.

Equipment ground terminations

Solid, AWG	Stranded, AWG
14–4 Cu	14–4 Cu
12–10 Al	12–4 Al

Neutral terminations

Solid, AWG	Stranded, AWG
14–8 Cu	12–4 Cu
12–8 Al	12–4 Al

Wire sizes

Line	Neutral lugs
1–250 Cu	
2/0–250 Al	6–2/0 Cu-Al

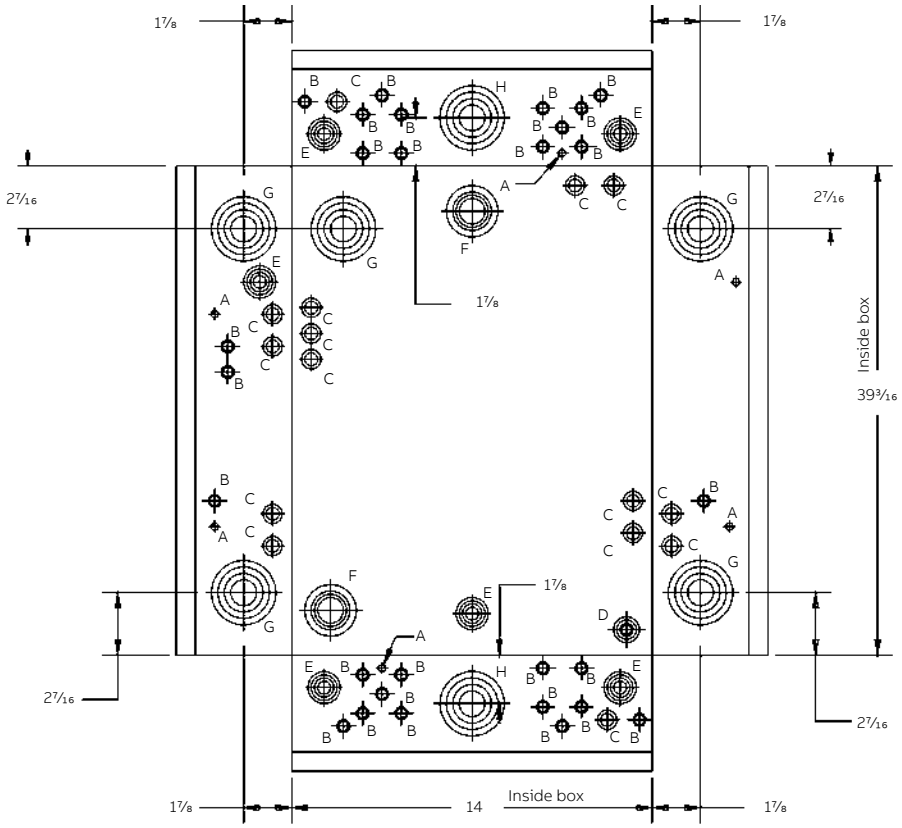

Knockout diagram	
SYM	**Description**
A	9/32 K.O.
B	3/8 × 1/2 K.O.
C	1/2 × 3/4 K.O.
D	3/8 × 1/2 × 3/4 × 1 K.O.
E	1/2 × 3/4 × 1 × 1 1/4 K.O.
F	1× 1 1/2 × 2 × 2 1/2 K.O.
G	1 X 1 1/2 X 2 X 2 1/2 K.0.
H	3/4 X 1 X 1 X 1/4 X 1 1/2 x 2 x 2 1/2 K.O.

Note: All K.O. locating dimensions are inside of box.

TL42422U

Part number	Description	Min. qty.	Master pack qty.
Interior assembly			
TL42422U	Interior, 30 circuit, 3-phase, 225 A	1	10
THDWRKIT2	Interior mounting screw kit	10	10
Front assembly			
TL42AC3	Assembly, front and pan	1	1
139C5515P4	Door	1	1
192A6597P1	Hinge	3	1200
THDWRKIT	Front mounting screw kit	20	20
Box assembly			
LC30422BOX	Box assembly	1	14
Accessories			
TBS	Bonding screw kit	1	1
TGL2 (two)	Equipment ground kit	1	1

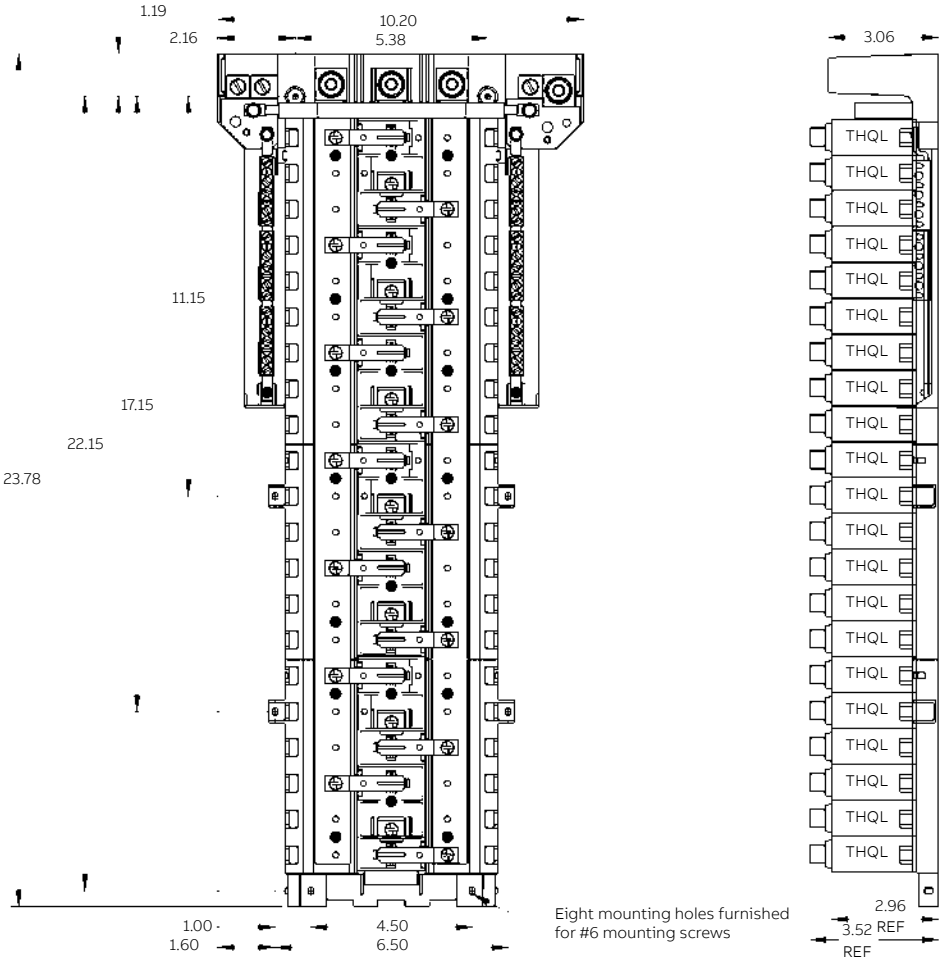

—

OEM interiors are UL-recognized components listed under UL file

	Maximum spaces			
	1" THQL			
Main ampere rating	**1-pole**	**2-pole**	**3-pole**	**Total 1-pole spaces**
225	42	20	14	42

Alternate backfed main breaker rating: 100 A max.
Main breaker retainer required: THQLRK

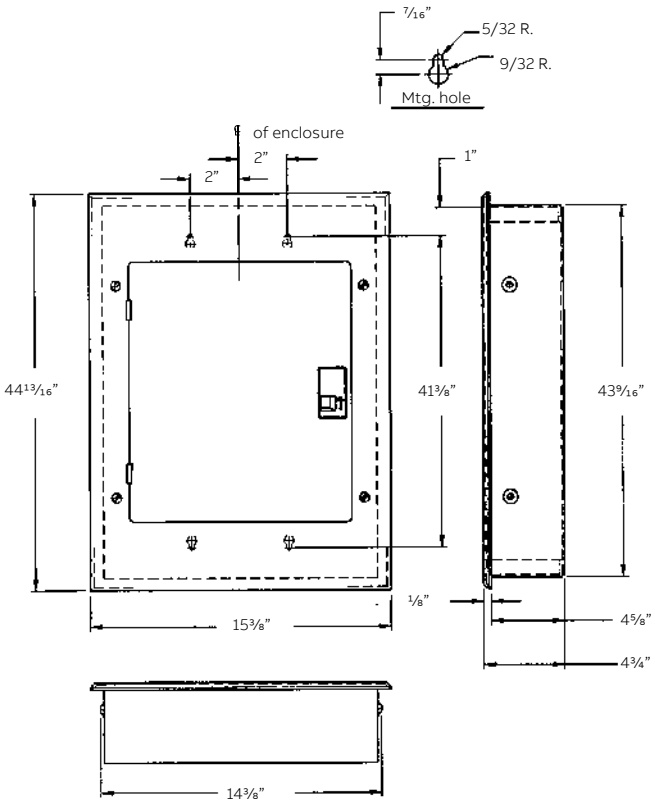

Features

- UL listed (panelboards no. 67)
- 60° C and 75° C conductor rating.
- 22,000 amperes RMS symmetrical short-circuit rating.

Equipment ground terminations

Solid, AWG	Stranded, AWG
14–4 Cu	14–4 Cu
14–4 Cu	12–4 Al

Neutral terminations

Solid, AWG	Stranded, AWG
14–8 Cu	12–4 Cu
12–8 Al	12–4 Al

Wire sizes

Line	Neutral lugs
1–300 Cu	
2/0–300 Al	6–2/0 Cu-Al

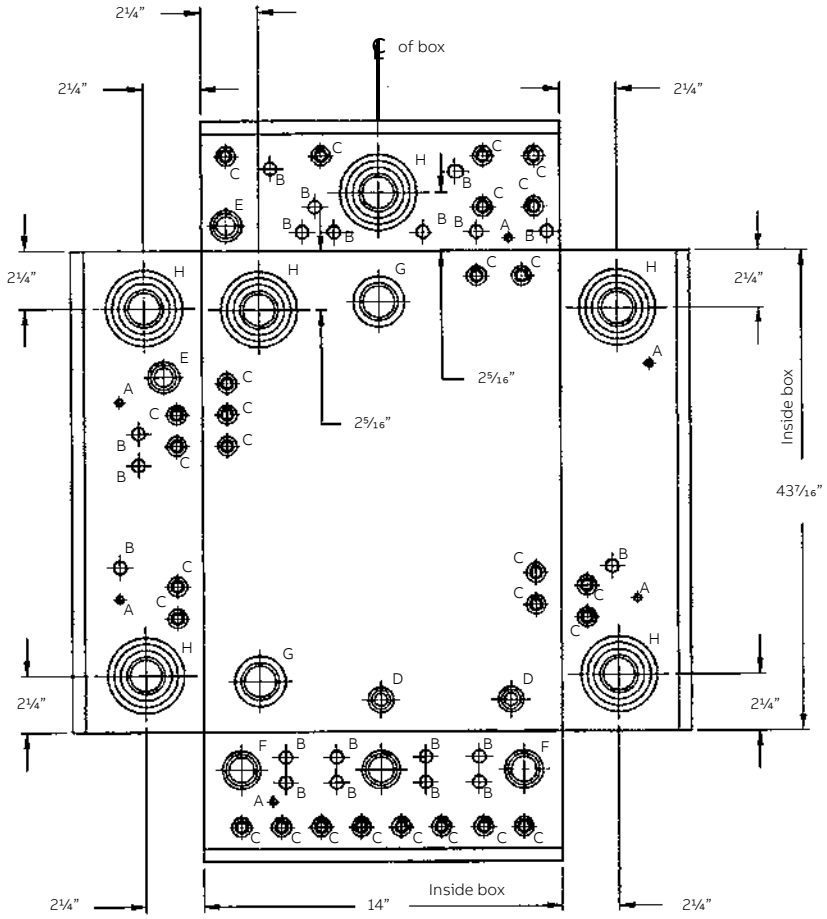

Knockout diagram	
SYM	**Description**
A	9/32 K.O.
B	1/2 K.O.
C	3/8 X 1/2 X 3/4 K.O.
D	1/2 X 3/4 X 1 K.O.
E	1/2 X 3/4 X 1 X 1 1/4 K.O.
F	3/4 X 1 X 1 1/4 X 1 1/2 K.O.
G	1 1/4 X 1 1/2 X 2 K.O.
H	1 1/4 X 1 1/2 X 2 X 2 1/2 X 3 K.O.

Note: All K.O. locating dimensions are inside of box.

TM24420U

Part number	Description	Min. qty.	Master pack qty.
Interior assembly			
TM24420U	Interior, 24 circuit, 3-phase, 200 A	1	10
THDWRKIT2	Interior mounting screw kit	10	10
Front assembly			
TM24DC3	Assembly, front and pan	1	1
139C5515P5	Door	1	1
192A6597P1	Hinge	3	1200
THDWRKIT	Front mounting screw kit	20	20
Box assembly			
LC30420BOX	Box assembly	1	24
Accessories			
TBS	Bonding screw kit	1	1
TGK32	Equipment ground kit	1	1
THQD32200X2	Circuit breaker, TQD225 style	1	1
315A7060G2	ASM, support bracket, breaker	1	200
N667CP12004B6	Screw, support bracket mounting	1	200
N37P17042B6	Screw, breaker mounting to bracket	1	200
192A6976P167	Screw, breaker load connection	3	200

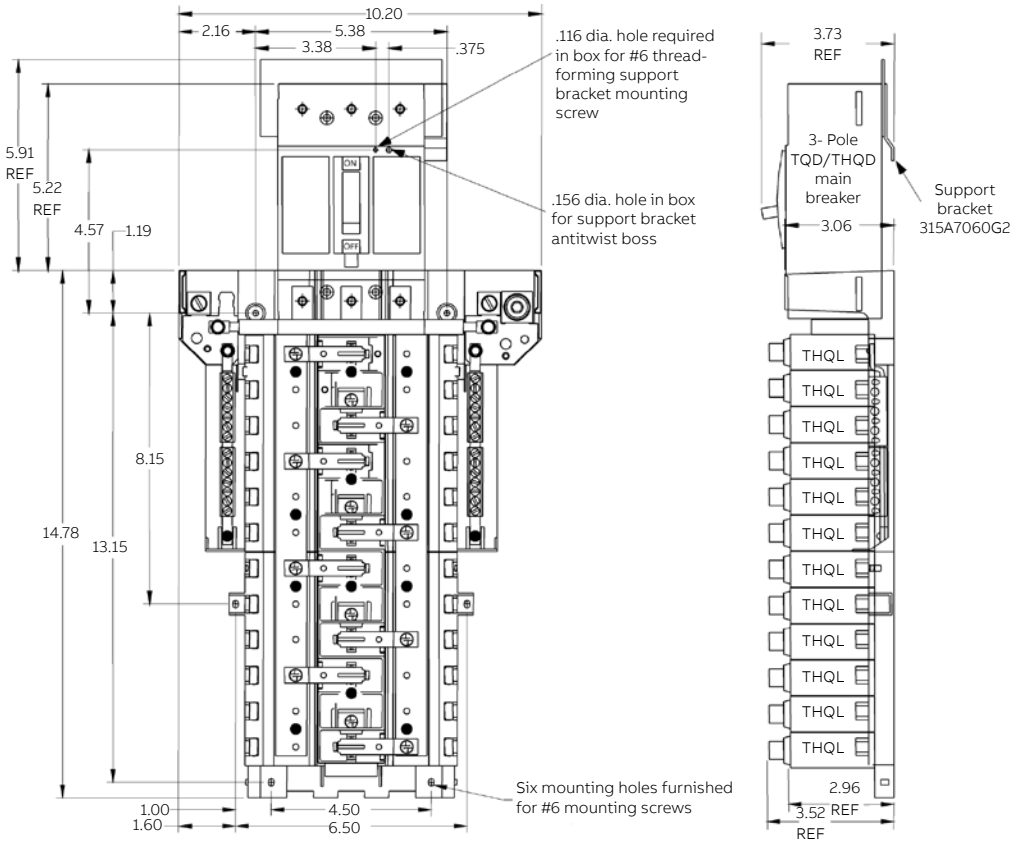

—

OEM interiors are UL-recognized components listed under UL file E21790

	Maximum spaces			
	1" THQL			
Main ampere rating	**1-pole**	**2-pole**	**3-pole**	**Total 1-pole spaces**
200	24	12	8	24

Note: Main breaker and accessories not included with OEM interior; order separately.

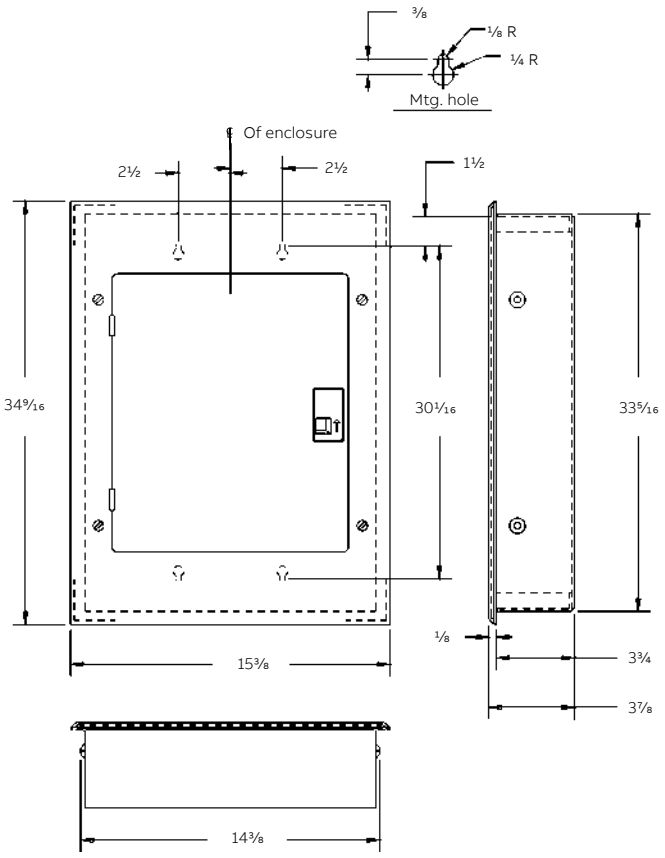

Features

- UL listed (panelboards no. 67)
- 60° C and 75° C conductor rating.
- 22,000 amperes RMS symmetrical short-circuit rating.

Equipment ground terminations

Solid, AWG	Stranded, AWG
14–4 Cu	14–4 Cu
12–10 Al	12–4 Al

Neutral terminations

Solid, AWG	Stranded, AWG
14–8 Cu	12–4 Cu
12–8 Al	12–4 Al

Wire sizes

Line	Neutral lugs
1–300 MCM Cu	
2/0–300 MCM Al	6–2/0 Cu-Al

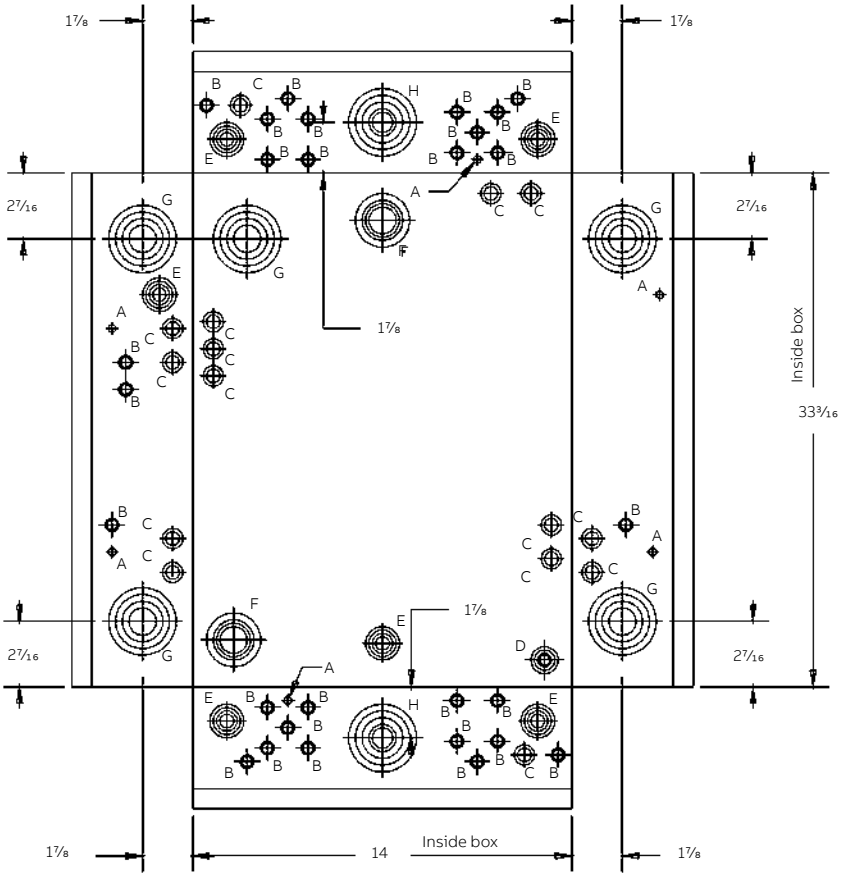

Knockout diagram	
SYM	**Description**
A	9/32 K.O.
B	3/8 × 1/2 K.O.
C	1/2 × 3/4 K.O.
D	3/8 × 1/2 × 3/4 × 1 K.O.
E	1/2 × 3/4 × 1 × 1 1/4 K.O.
F	1× 1 1/2 × 2 × 2 1/2 K.O.
G	1 X 1 1/2 X 2 X 2 1/2 K.O.
H	3/4 X 1 X 1 X 1/4 X 1 1/2 x 2 x 2 1/2 K.O.

Note: All K.O. locating dimensions are inside of box.

TM30420U

Part number	Description	Min. qty.	Master pack qty.
Interior assembly			
TM30420U	Interior, 30 circuit, 3-phase, 200 A	1	10
THDWRKIT2	Interior Mounting Screw Kit	10	10
Front assembly			
TM30DC3	Assembly, front and pan	1	1
139C5515P5	Door	1	1
192A6597P1	Hinge	3	1200
THDWRKIT	Front mounting screw kit	20	20
Box assembly			
LC3220BOX	Box assembly	1	24
Accessories			
TBS	Bonding screw kit	1	1
TGK32	Equipment ground kit	1	1
THQD32200X2	Circuit breaker, TQD225 style	1	1
315A7060G2	ASM, support bracket, breaker	1	200
N667CP12004B6	Screw, support bracket mounting	1	200
N37P17042B6	Screw, breaker mounting to bracket	1	200
192A6976P167	Screw, breaker load connection	3	200

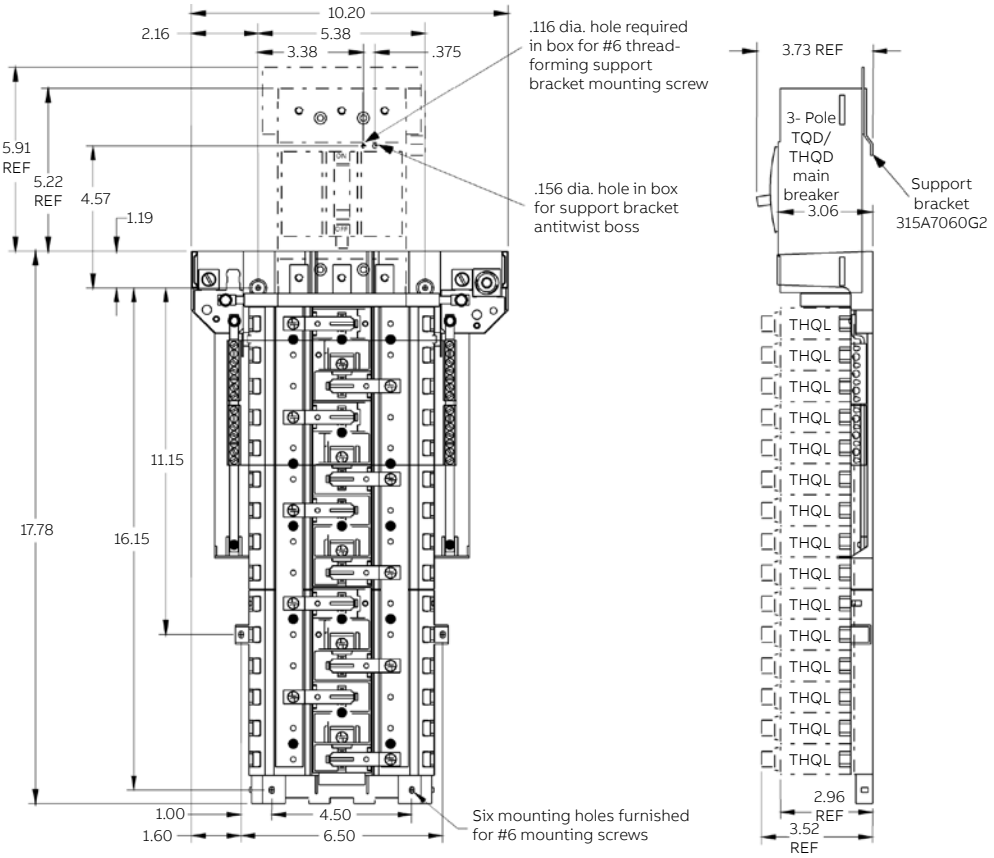

—

OEM interiors are UL-recognized components listed under UL file E21790

	Maximum spaces			
	1" THQL			
Main ampere rating	**1-pole**	**2-pole**	**3-pole**	**Total 1-pole spaces**
200	30	14	10	30

Note: Main breaker and accessories not included with OEM interior; order separately.

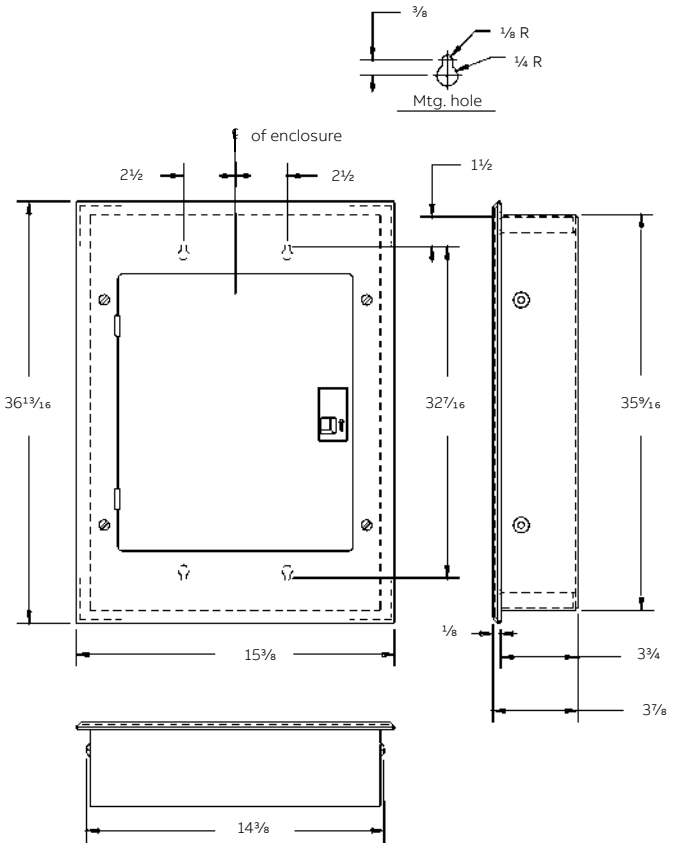

Features

- UL listed (panelboards no. 67)
- 60° C and 75° C conductor rating.
- 22,000 amperes RMS symmetrical short-circuit rating.

Equipment ground terminations

Solid, AWG	Stranded, AWG
14–4 Cu	14–4 Cu
12–10 Al	12–4 Al

Neutral terminations

Solid, AWG	Stranded, AWG
14–8 Cu	12–4 Cu
12–8 Al	12–4 Al

Wire sizes

Line	Neutral lugs
1–250 MCM Cu	
2/0–250 MCM Al	6–2/0 Cu-Al

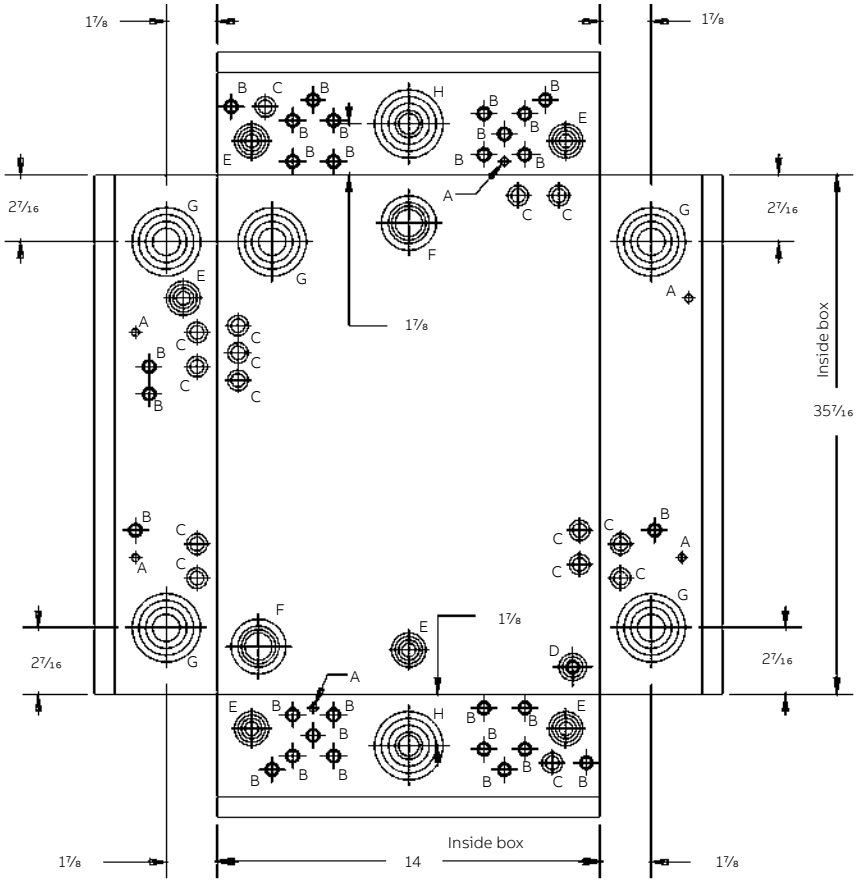

Knockout diagram	
SYM	**Description**
A	9/32 K.O.
B	3/8 × 1/2 K.O.
C	1/2 × 3/4 K.O.
D	3/8 × 1/2 × 3/4 × 1 K.O.
E	1/2 × 3/4 × 1 × 1 1/4 K.O.
F	1× 1 1/2 × 2 × 2 1/2 K.O.
G	1 X 1 1/2 X 2 X 2 1/2 K.0.
H	3/4 X 1 X 1 X 1/4 X 1 1/2 x 2 x 2 1/2 K.O.

Note: All K.O. locating dimensions are inside of box.

PowerMark Gold™ OEM specialty load center parts

TSF420U

Part number	Description	Min. qty.	Master pack qty.
Interior assembly			
TSF420U	Interior, 4 circuits 1" or 8 circuits 1/2", 1-phase, 200 A	1	10
THDWRKIT2	Interior mounting screw kit	10	10
Accessories			
TBS	Bonding screw kit	1	1
TGK12	Equipment ground kit	1	1
THQLRK1	Main breaker retaining kit	1	1

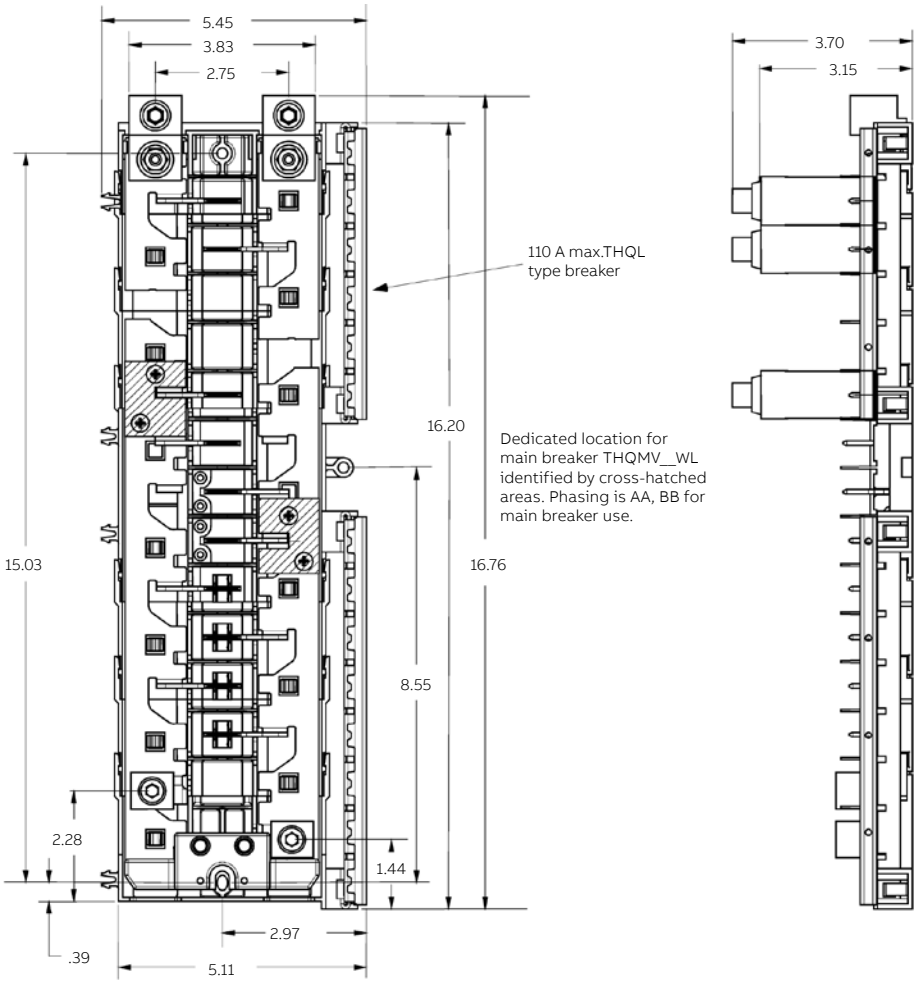

—

OEM interiors are UL-recognized components listed under UL file E21790

Main ampere rating	Maximum spaces				Total 1-pole spaces
	1" THQL		1/2" THQL		
	1-pole	2-pole	1-pole	2-pole	
200	4	2	8	3	8

TSLR420U

Part number	Description	Min. qty.	Master pack qty.
Interior assembly			
TSLR420U	Interior, 4 circuits 1" or 8 circuits 1/2", 1-phase, 200 A (125 A for TSLR412CSCU)	1	10
THDWRKIT2	Interior mounting screw kit	10	10
Accessories			
TBS	Bonding screw kit	1	1
TGK12	Equipment ground kit	1	1

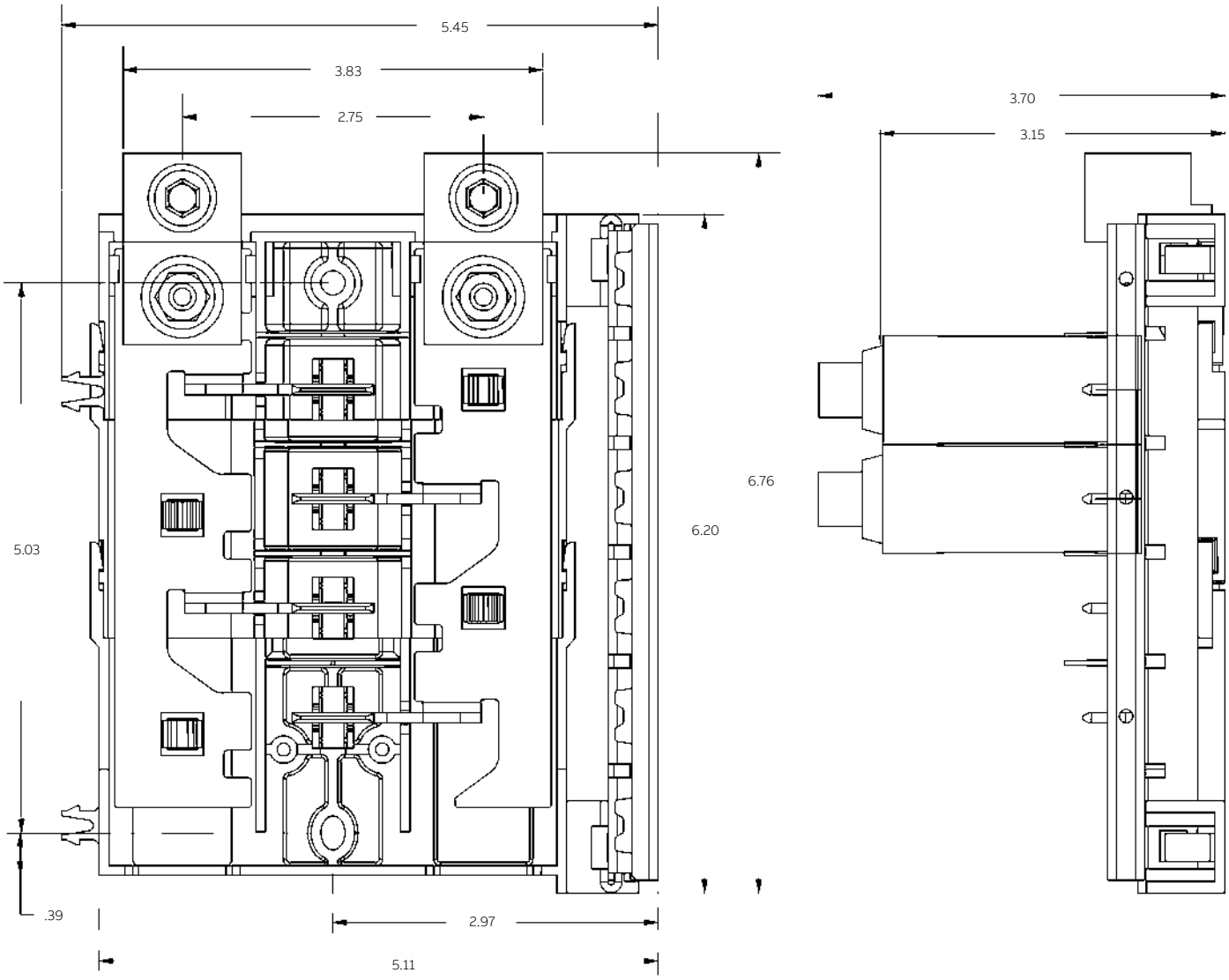

—

OEM interiors are UL-recognized components listed under UL file E21790

Main ampere rating	Maximum spaces				Total 1-pole spaces
	1" THQL		1/2" THQL		
	1-pole	2-pole	1-pole	2-pole	
200	4	2	8	3	8

TSMR1212U

Part number	Description	Min. qty.	Master pack qty.
Interior assembly			
TSMR1212U	Interior, 12 circuits 1" or 24 circuits 1/2", 1-phase, 125 A	1	10
THDWRKIT2	Interior mounting screw kit	10	10
-	Interior without neutral assembly	1	10
Accessories			
TBS	Bonding screw kit	1	1
TGK12	Equipment ground kit	1	1
TQMH000	Main breaker mounting kit	1	1
THQLKR1	Reverse-Fed Retaining Kit – Alternate	1	1

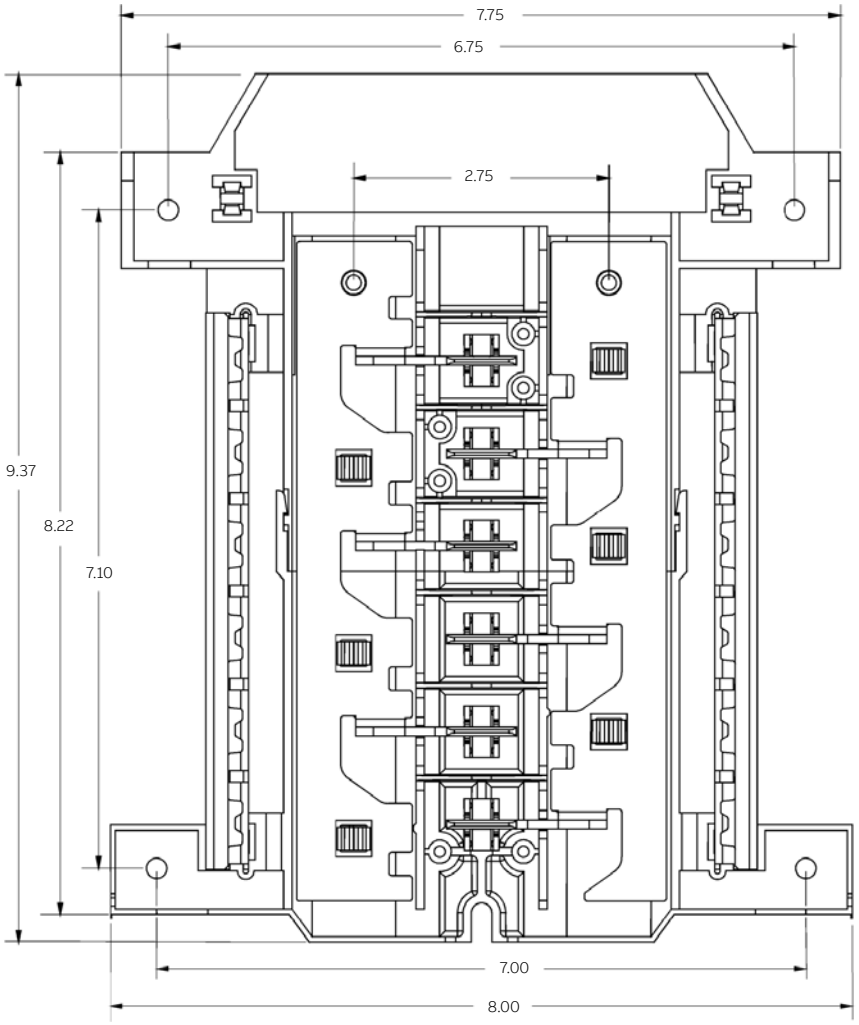

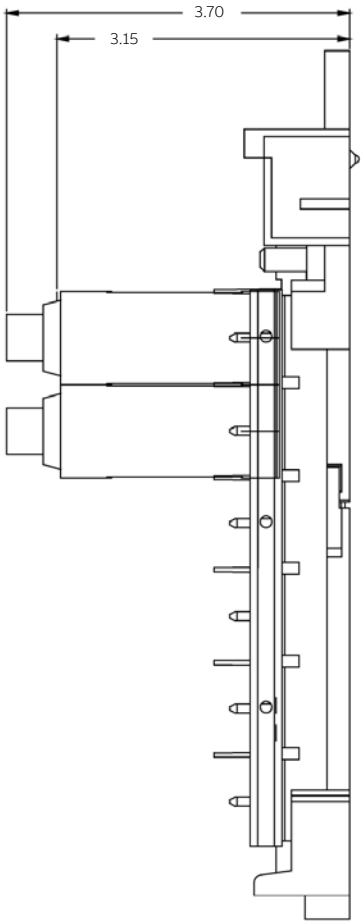

—

OEM interiors are UL-recognized components listed under UL file E21790

Main ampere rating	Maximum spaces				Total 1-pole spaces
	1" THQL		1/2" THQL		
	1-pole	2-pole	1-pole	2-pole	
125	12	6	24	10	24

For use with THQL, THHQL, or TXQL main breaker.

ABB Inc.
305 Gregson Drive
Cary, NC 27511
United States

electrification.us.abb.com

GE is a trademark of GE.
Manufactured by ABB Inc. under license from General Electric Company.

Customer Service
Phone: +1 800 431 7867

Distributors
E-mail: us-el.distributorsales@abb.com

All other customers
E-mail: us-el.oemsales@abb.com
Monday - Friday,
7:00 a.m. - 5:30p.m., Central Time

Tech Support: + 1 888-437-3765
Monday - Friday,
7:00 a.m. - 5:00 p.m., Central Time

We reserve the right to make technical changes or modify the contents of this document without prior notice. With regard to purchase orders and/or contracts, the agreed particulars shall prevail. ABB Inc. does not accept any responsibility whatsoever for potential errors or possible lack of information in this document.

We reserve all rights in this document and in the subject matter and illustrations contained therein. Any reproduction or utilization of its contents – in whole or in parts – is forbidden without prior written consent of ABB Inc.

GE is a trademark of GE. Manufactured by ABB Inc. under license from GE.

© 2023 ABB. All rights reserved.

1TQC164000E0001 REV.B MARCH 2023