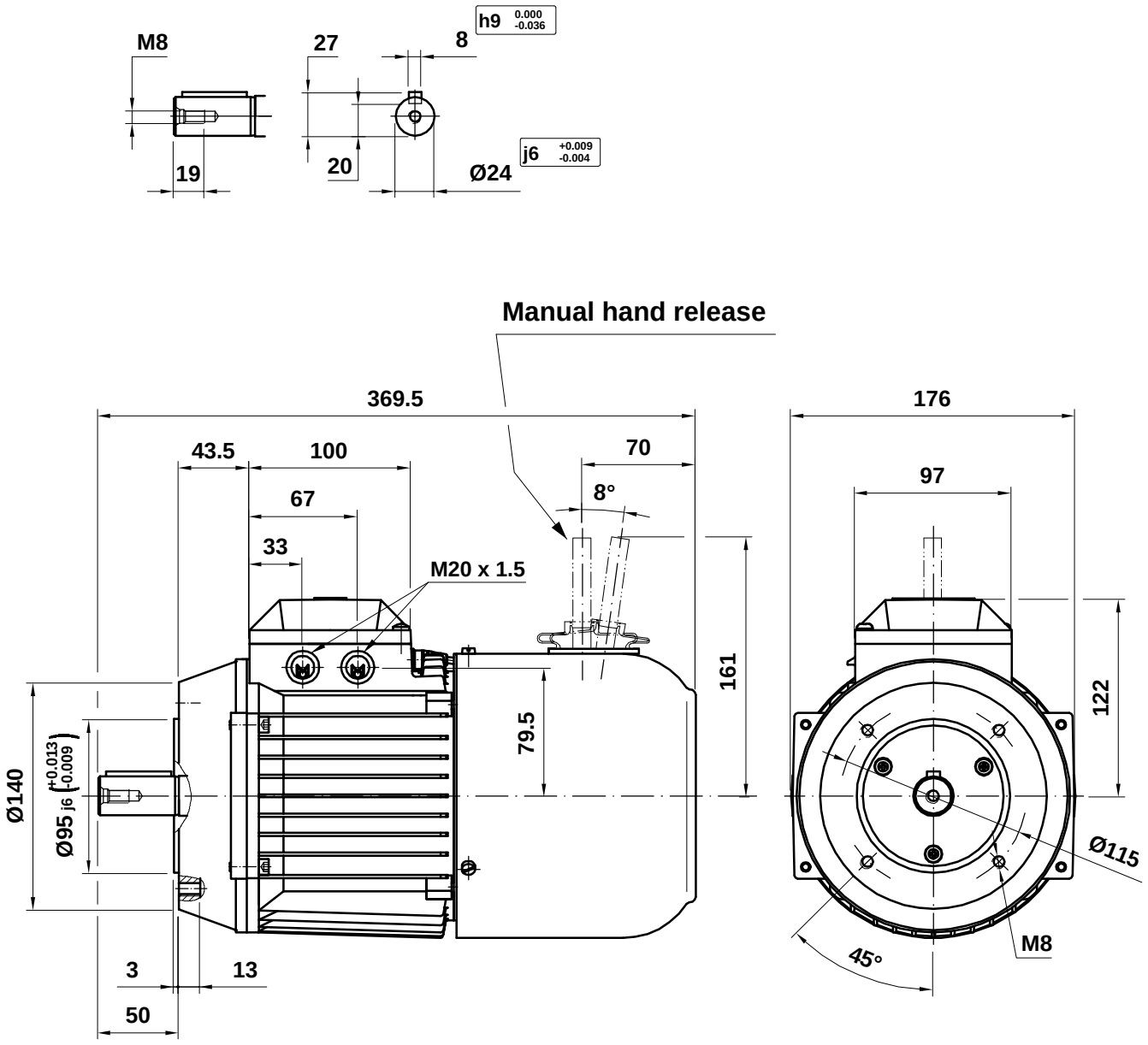

M3ARF(S) 090 S

Motor Dimension Print	Motor Type : M3ARF/S 090 S	Document Nº : A1.0705

Description :

Brake motor flange mounted IM3601

Unit : División Motores, Spain	Issued by : IKA/G.Blanes	Replaces :	
Date : 2002-01-04	Approved by : IKA/E.Sáenz	Replaced by :	
ABB Automation Products, S.A.	Customer Reference :		ABB