Doc. N.° 1SDH002011A1517 - ECN000145265 - Rev. B

SACE Tmax XT

Ekip Signalling 1K - XT5

XT5

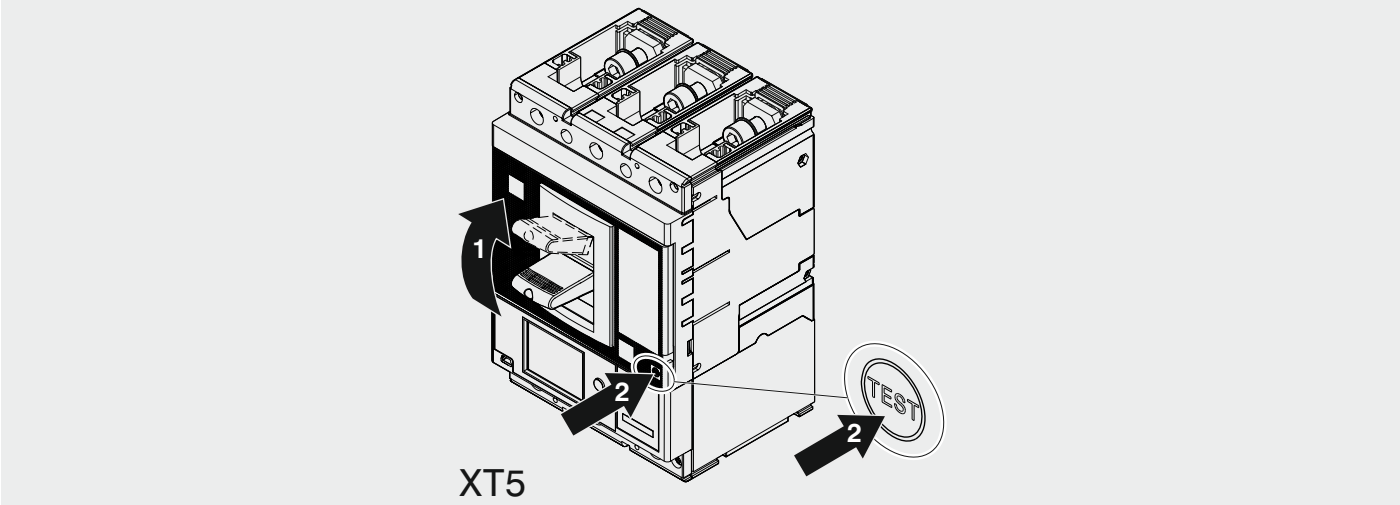

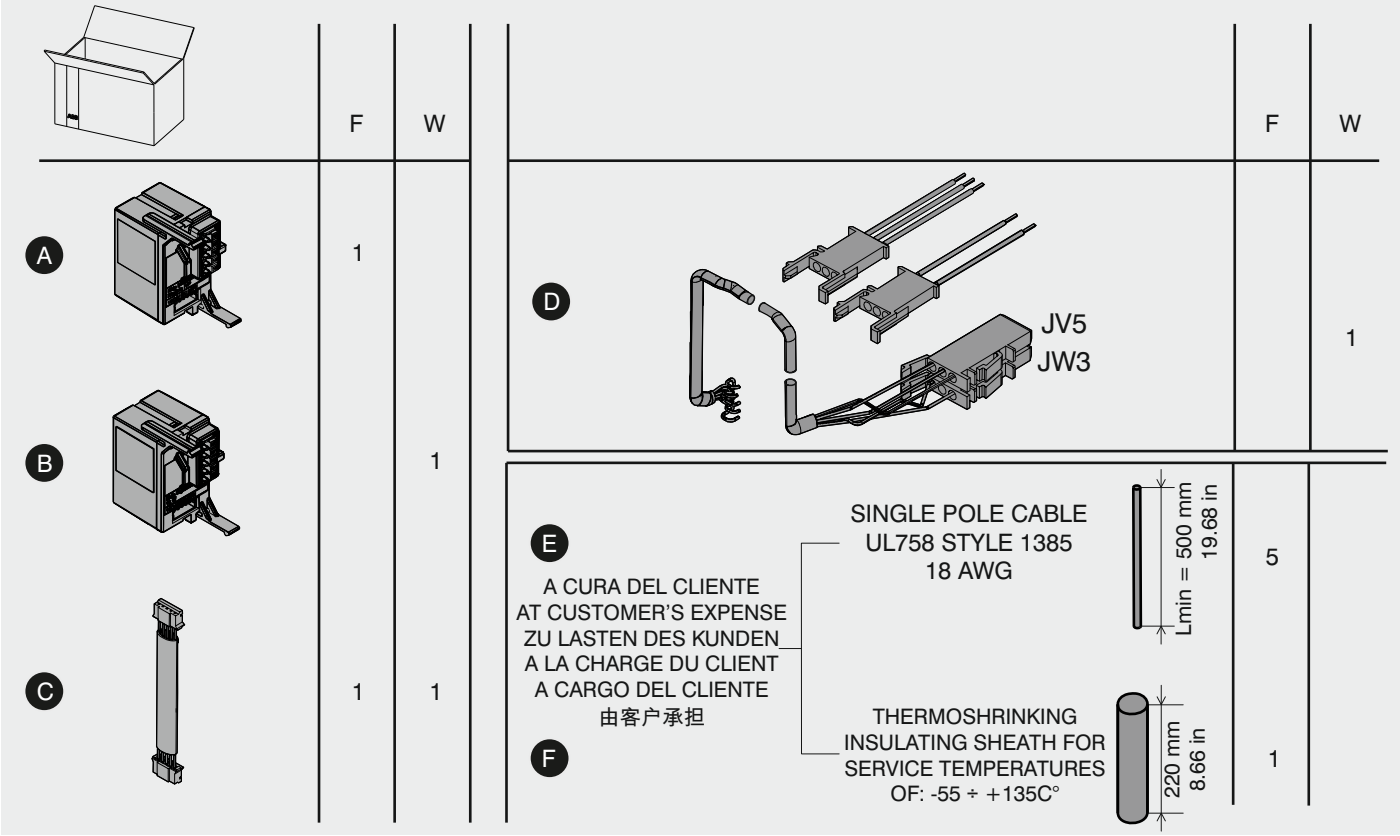

1 F

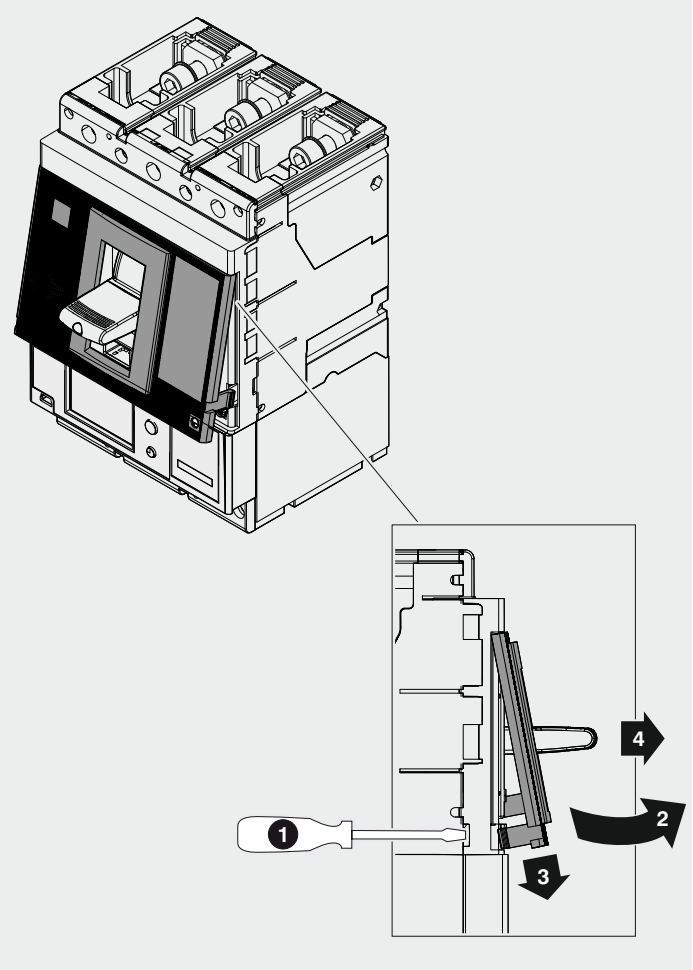

2 F

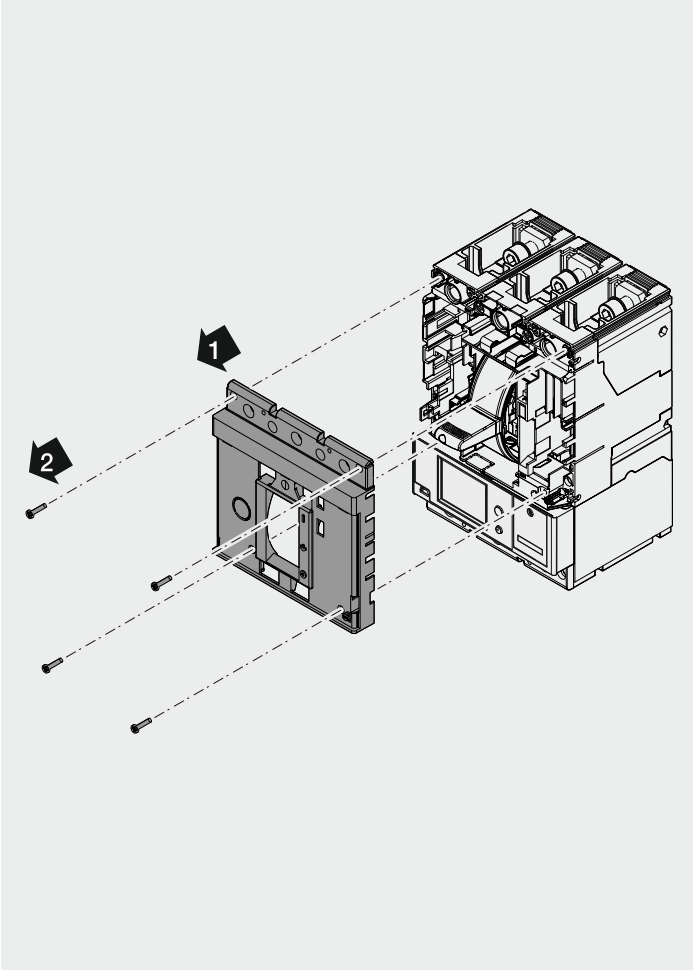

3

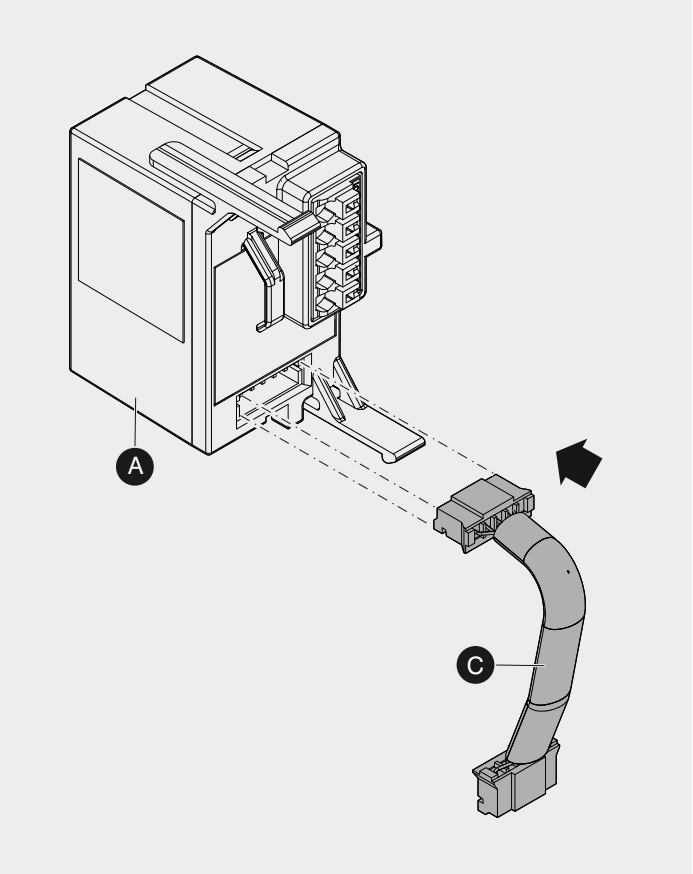

4 F

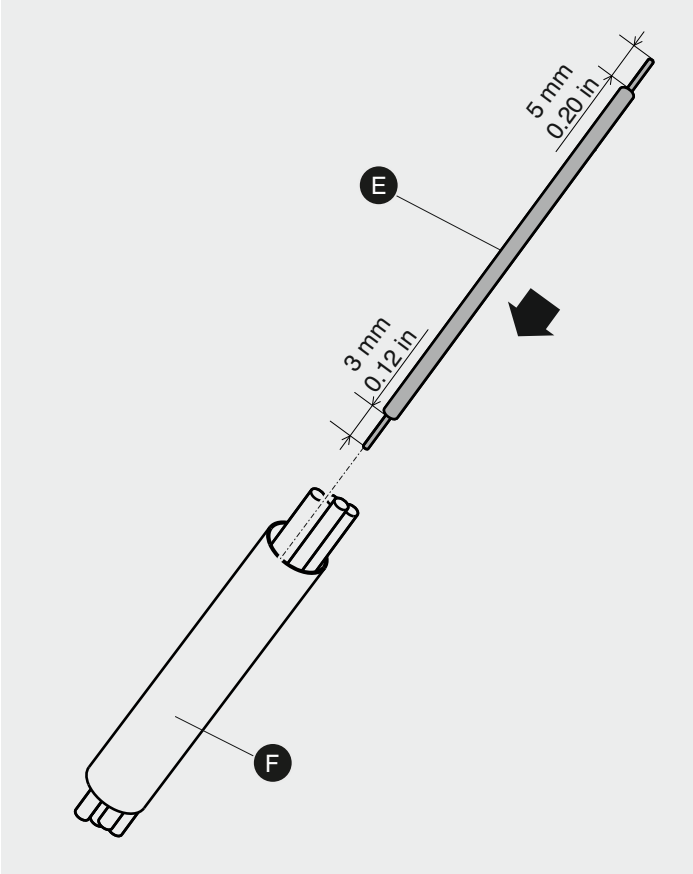

5 F

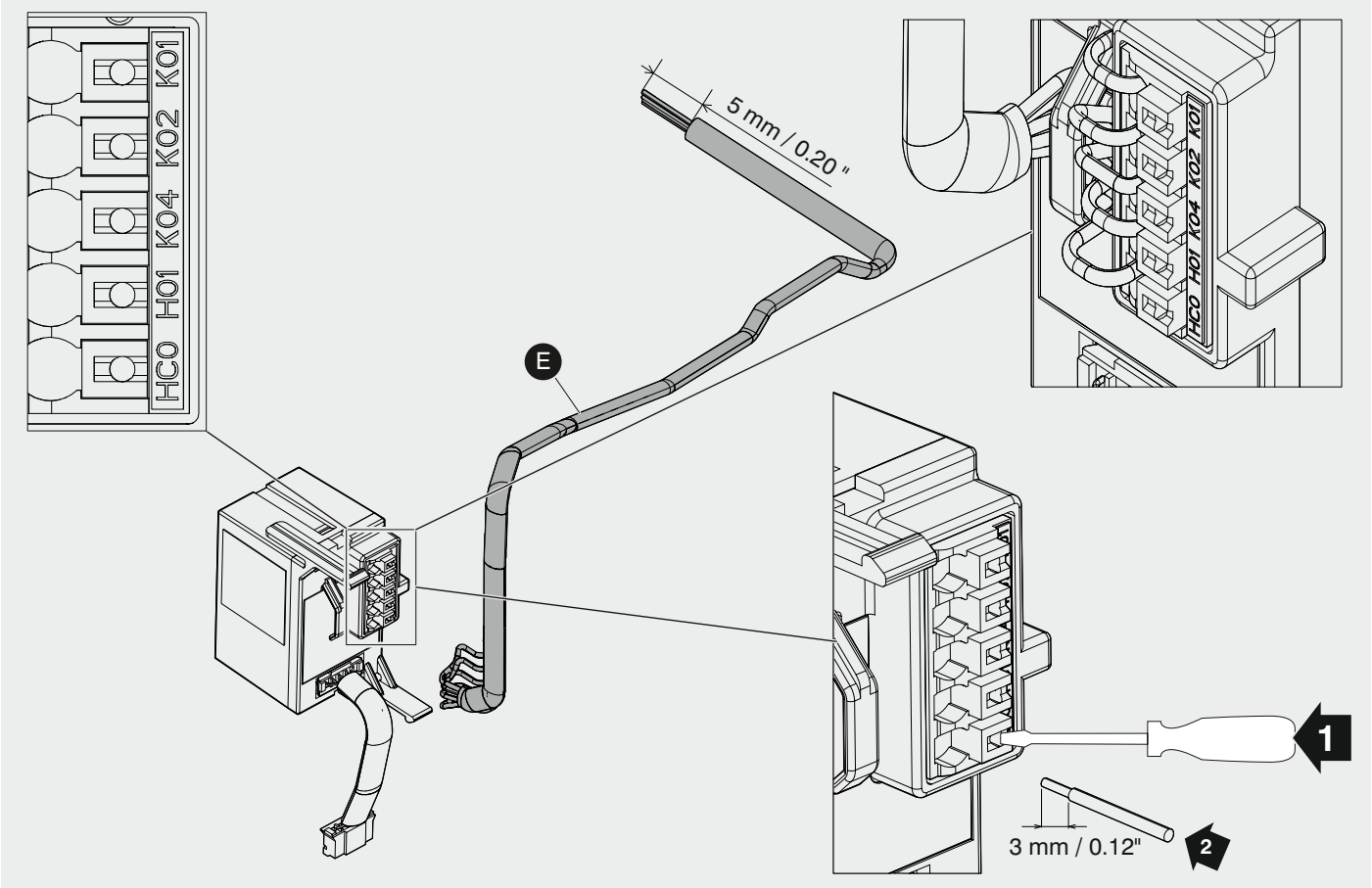

6 F

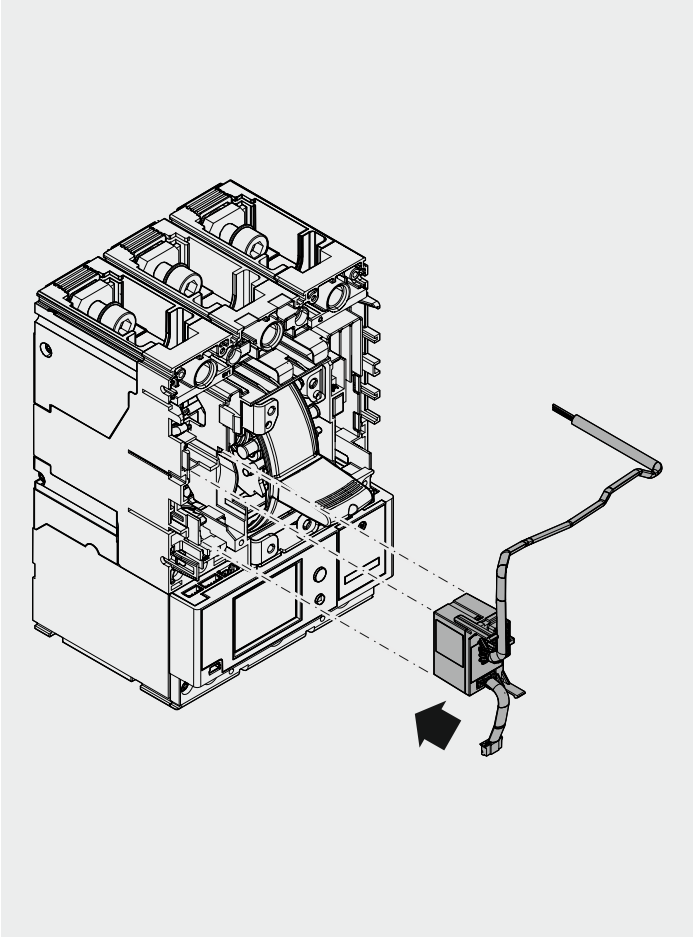

7 F

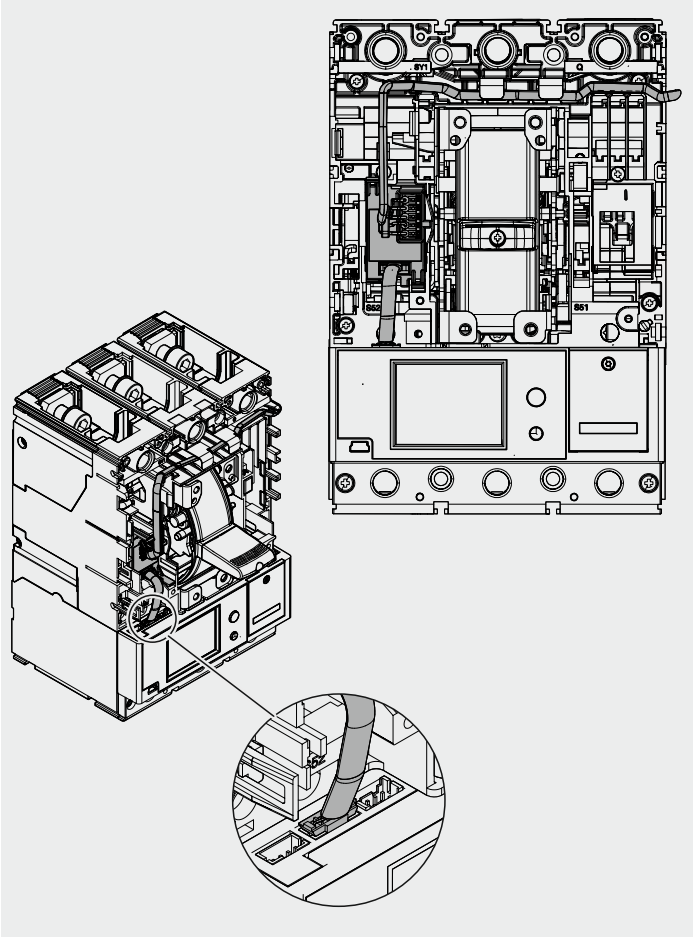

8 F

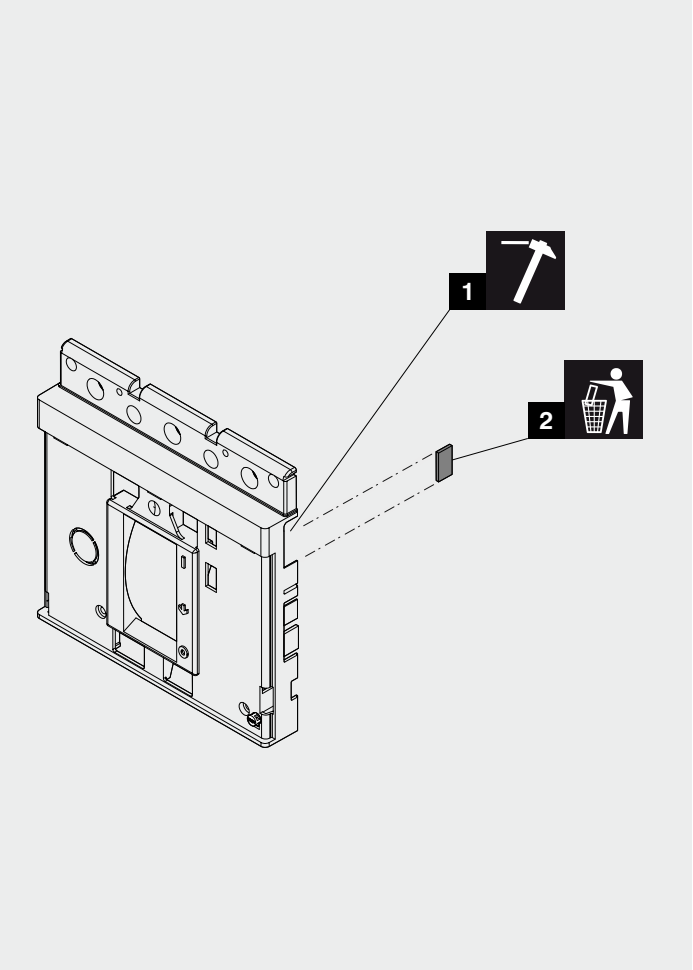

9 F

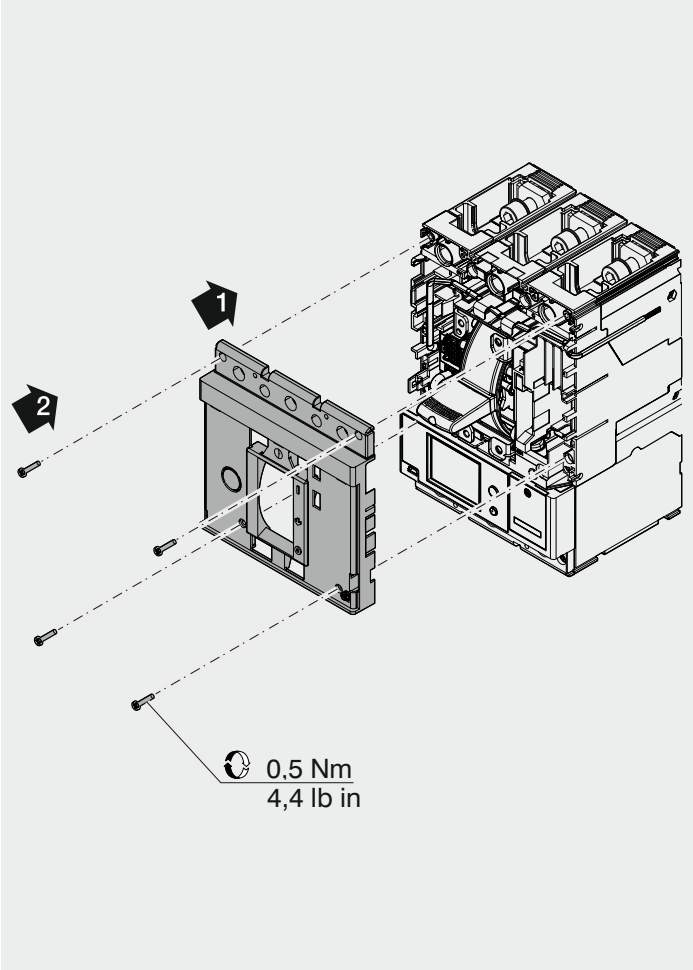

10 F

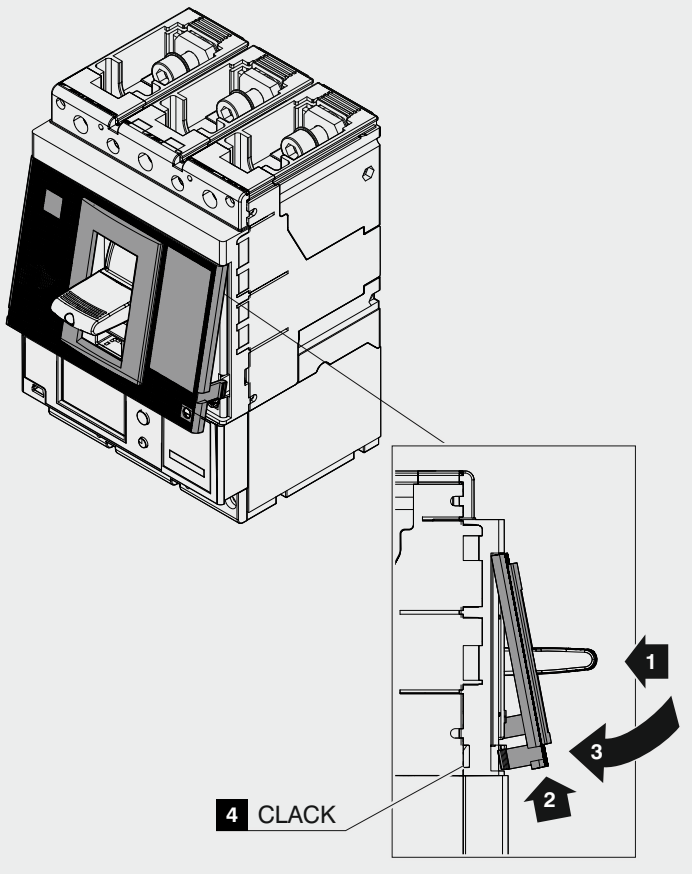

11 W

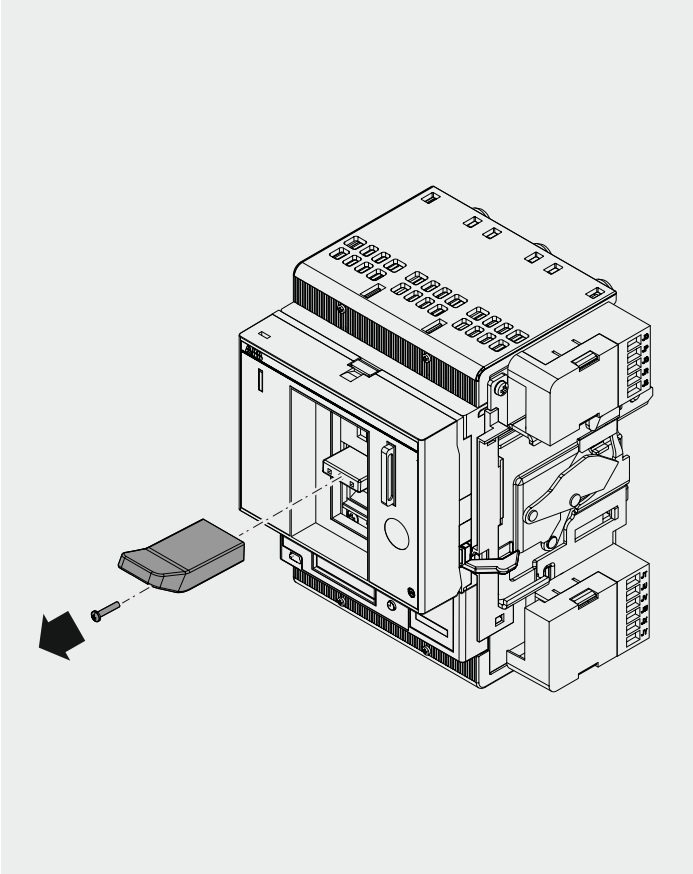

12 W

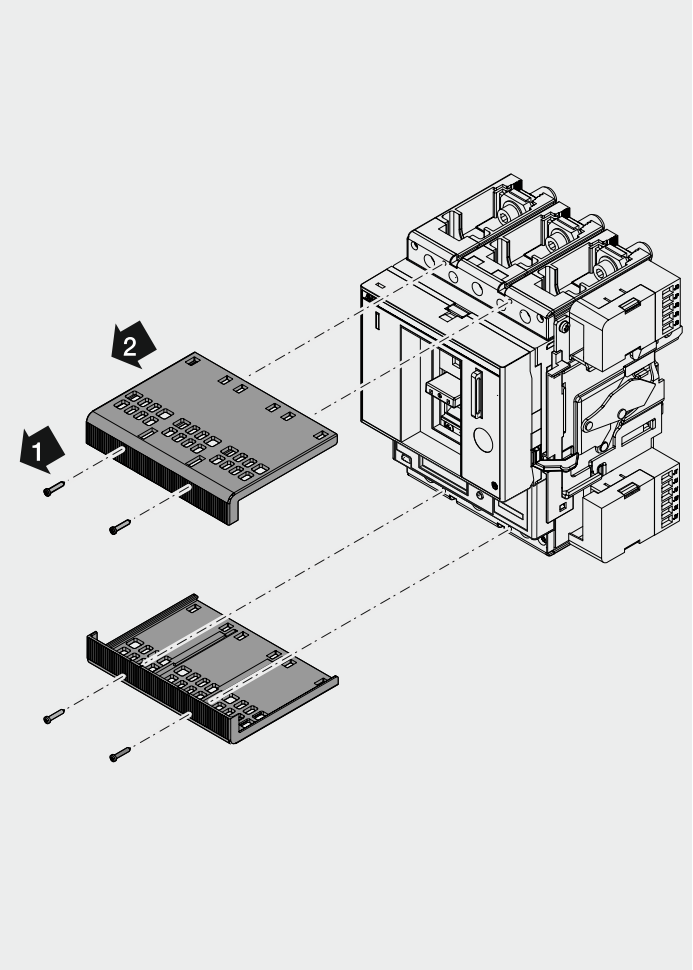

13 W

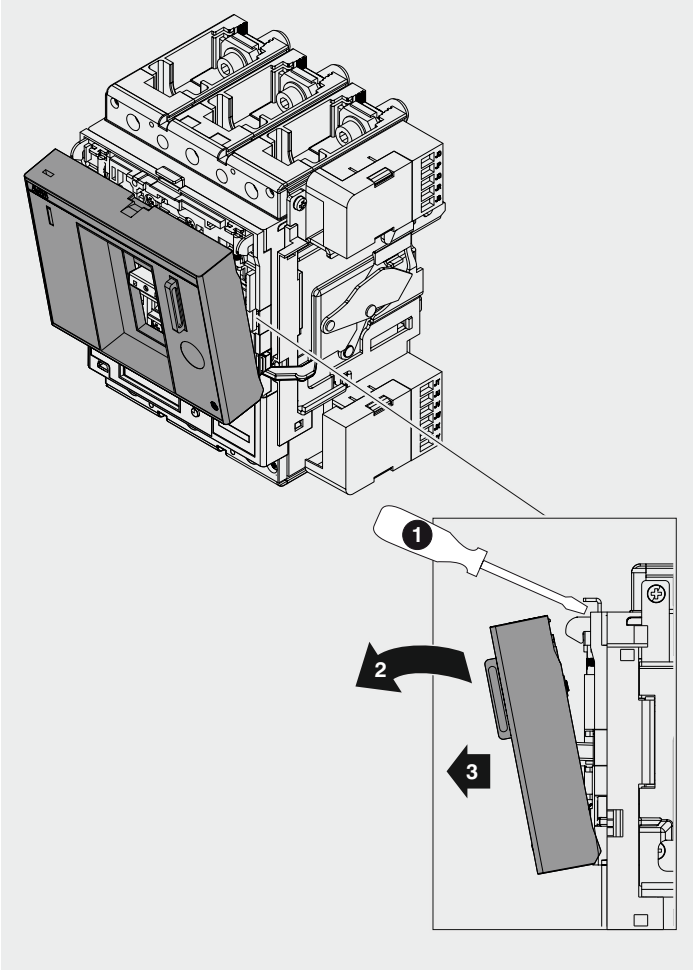

14 W

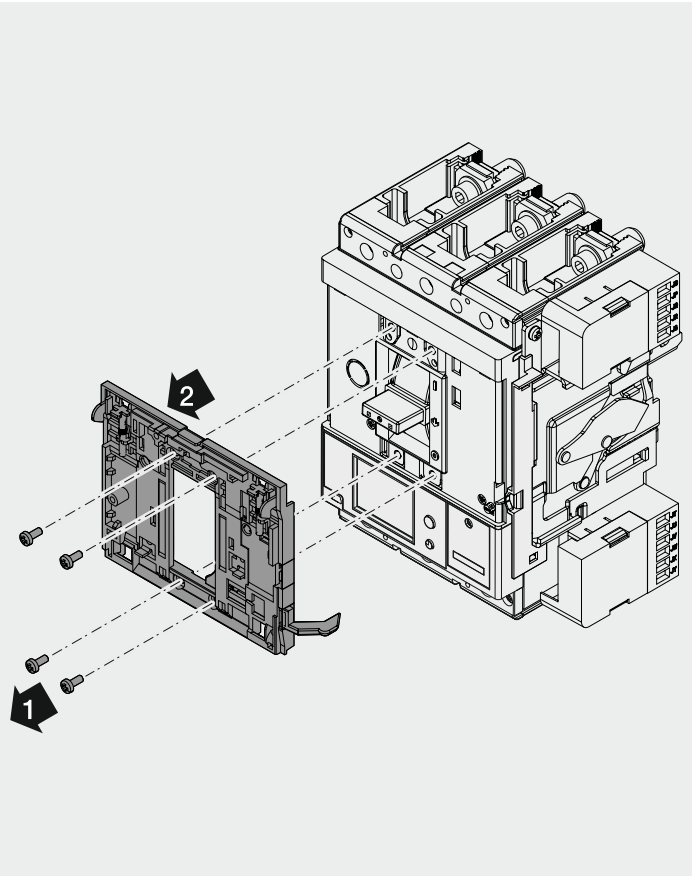

15 W

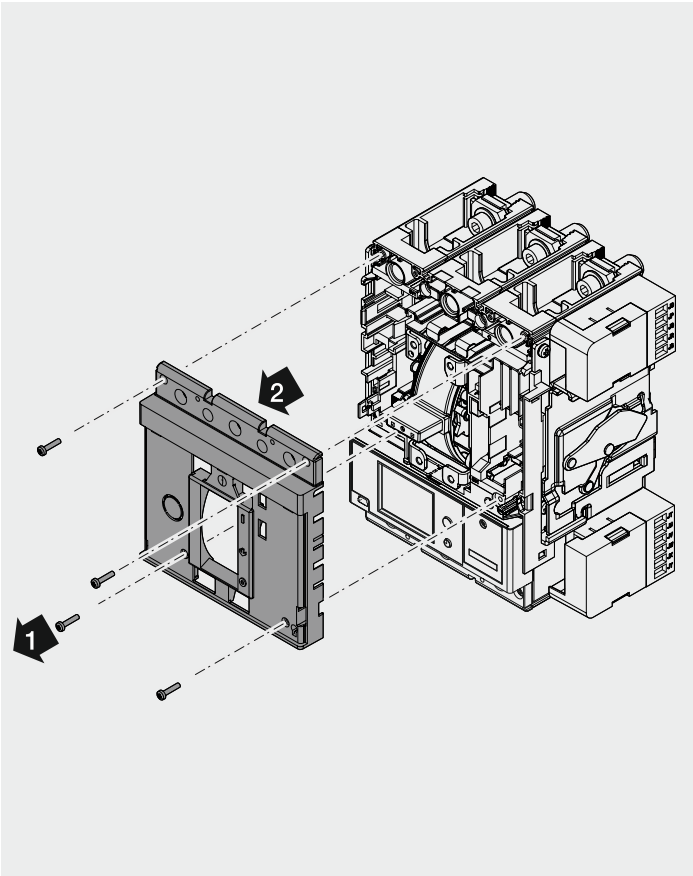

16 **W**

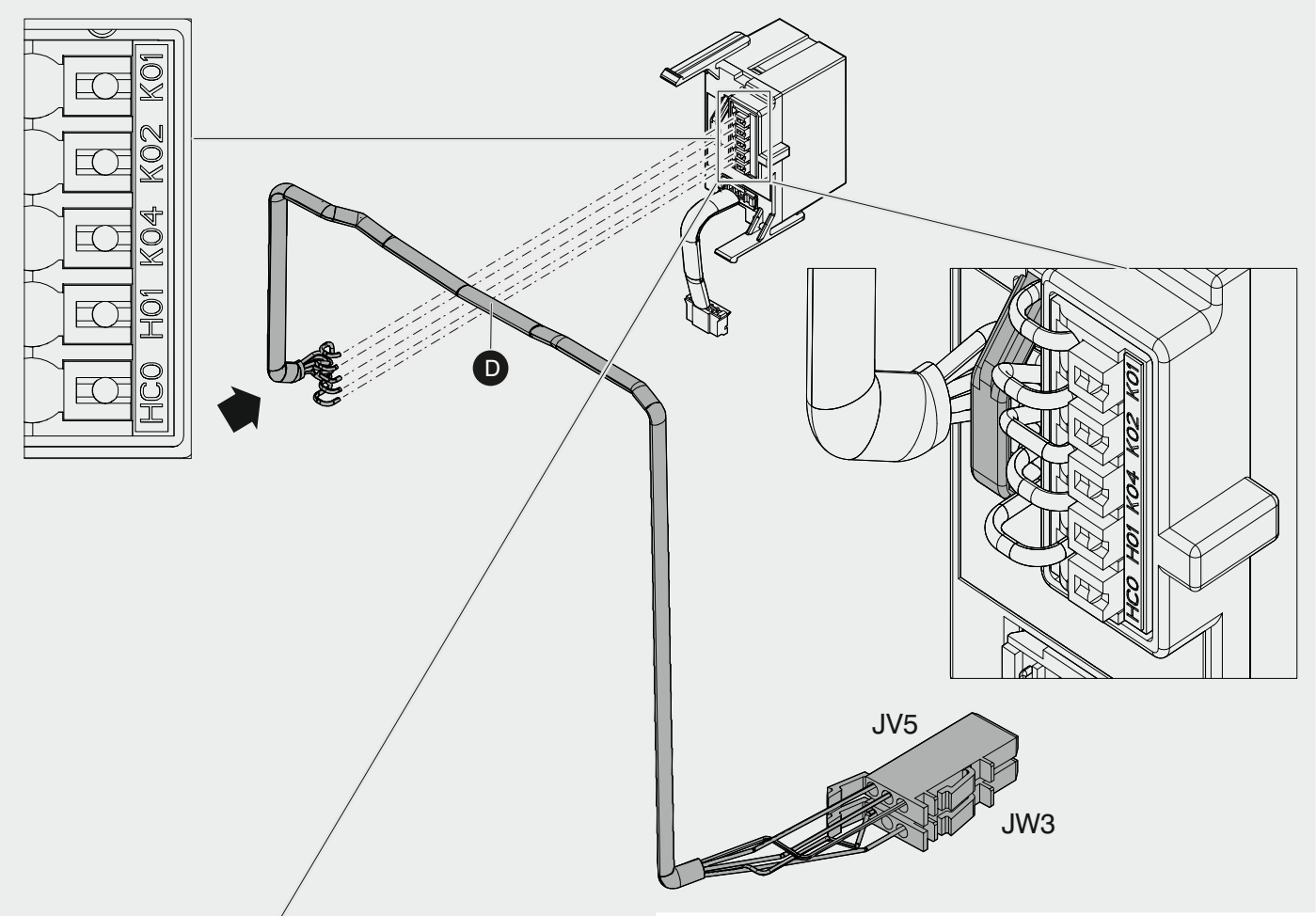

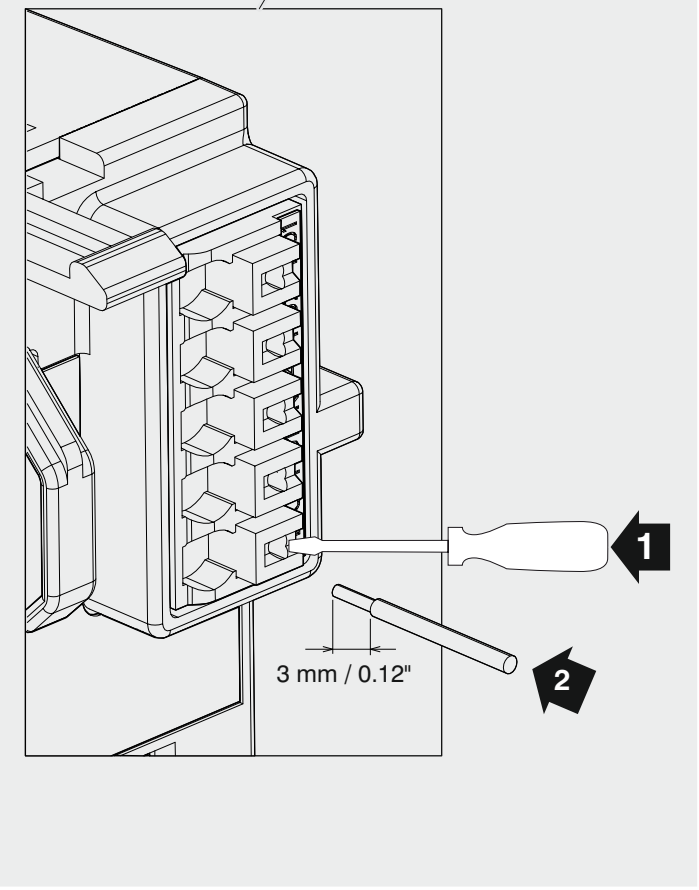

17 **W**

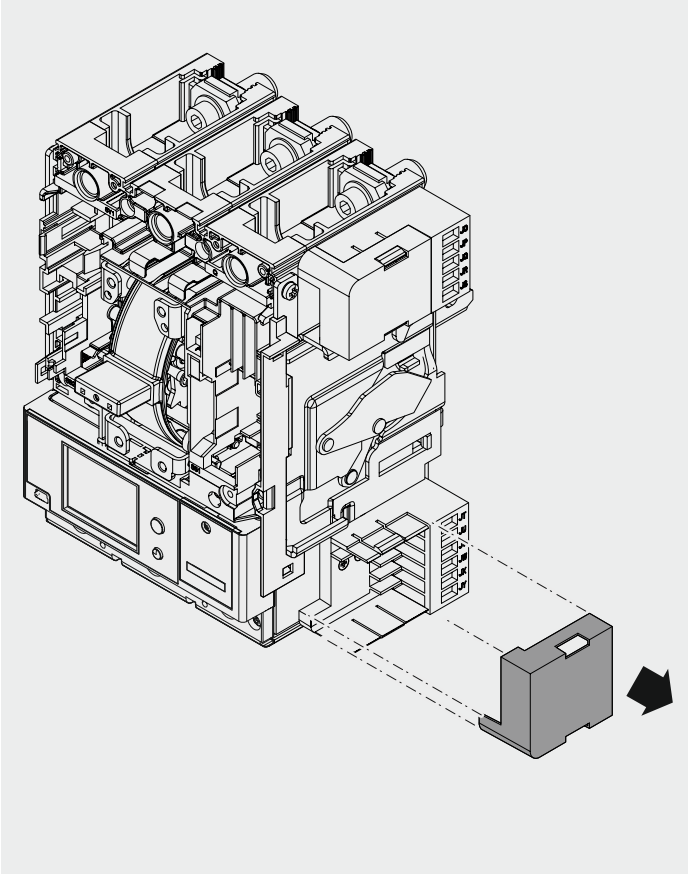

18 W

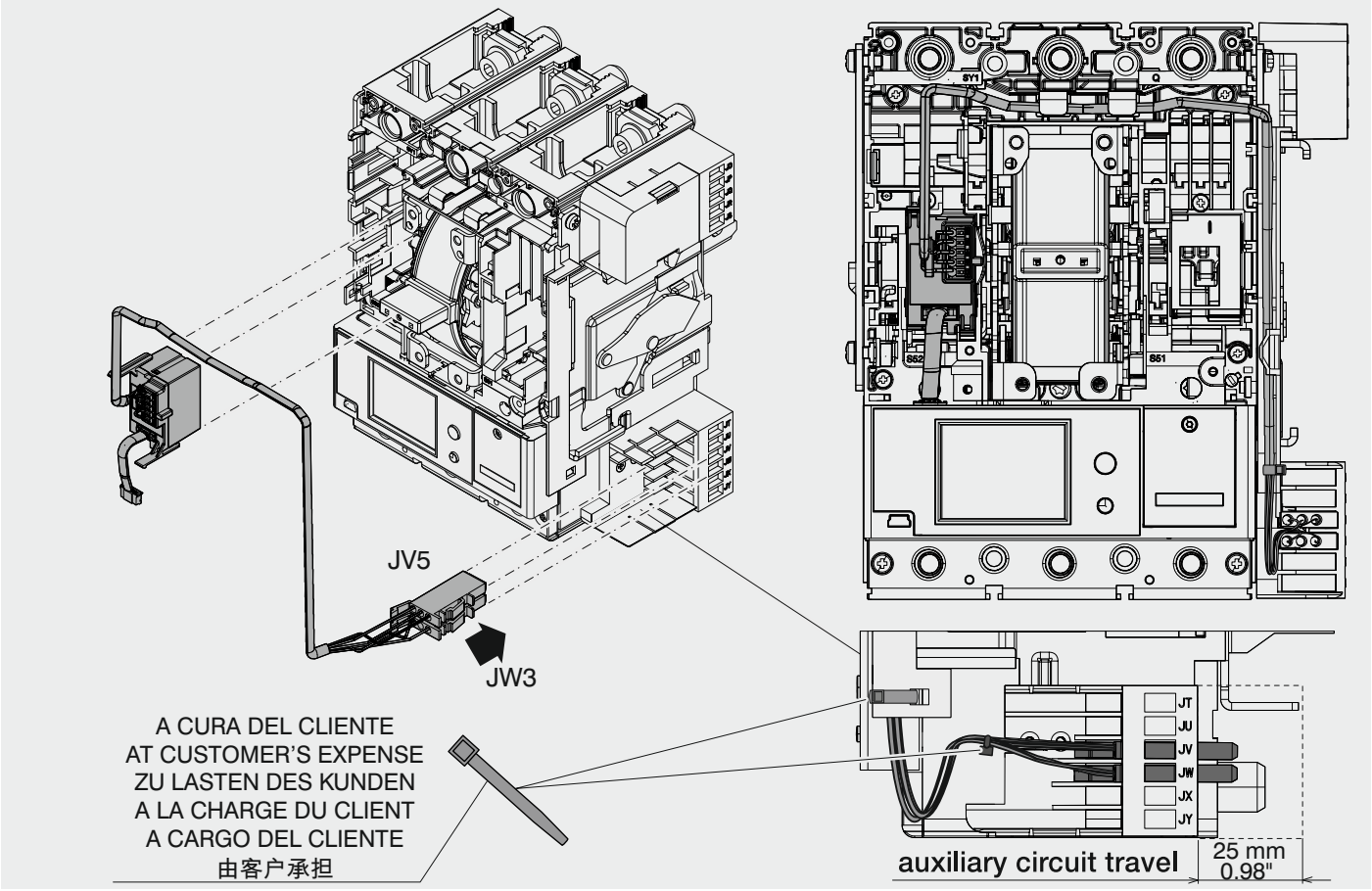
JV5
JW3
A CURA DEL CLIENTE
AT CUSTOMER'S EXPENSE
ZU LASTEN DES KUNDEN
A LA CHARGE DU CLIENT
A CARGO DEL CLIENTE
由客户承担
JT
JU
JV
JW
JX
JY
auxiliary circuit travel
25 mm
0.98"

19 W

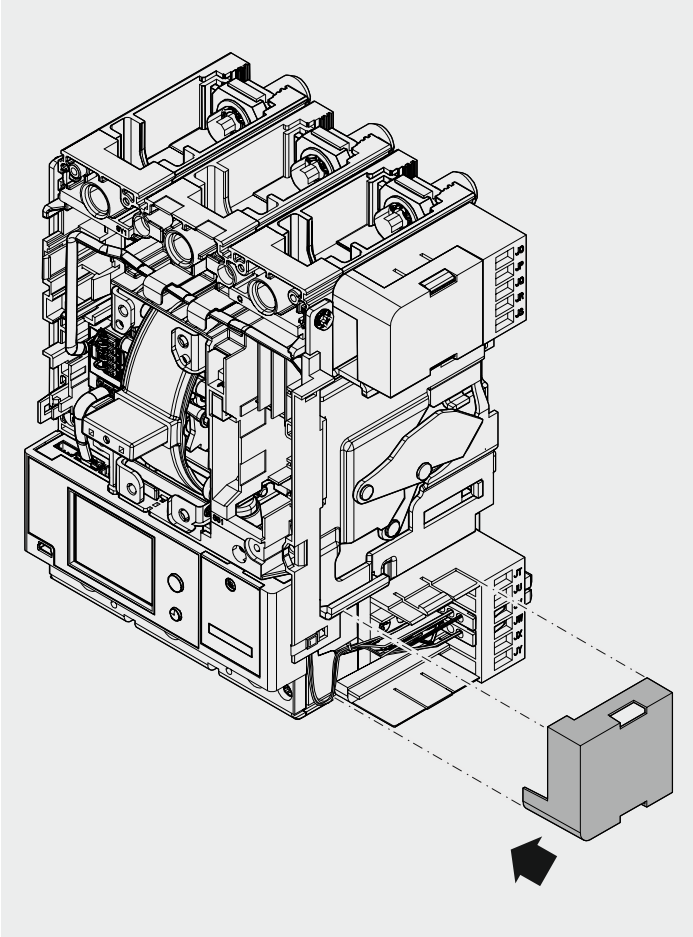

20 W

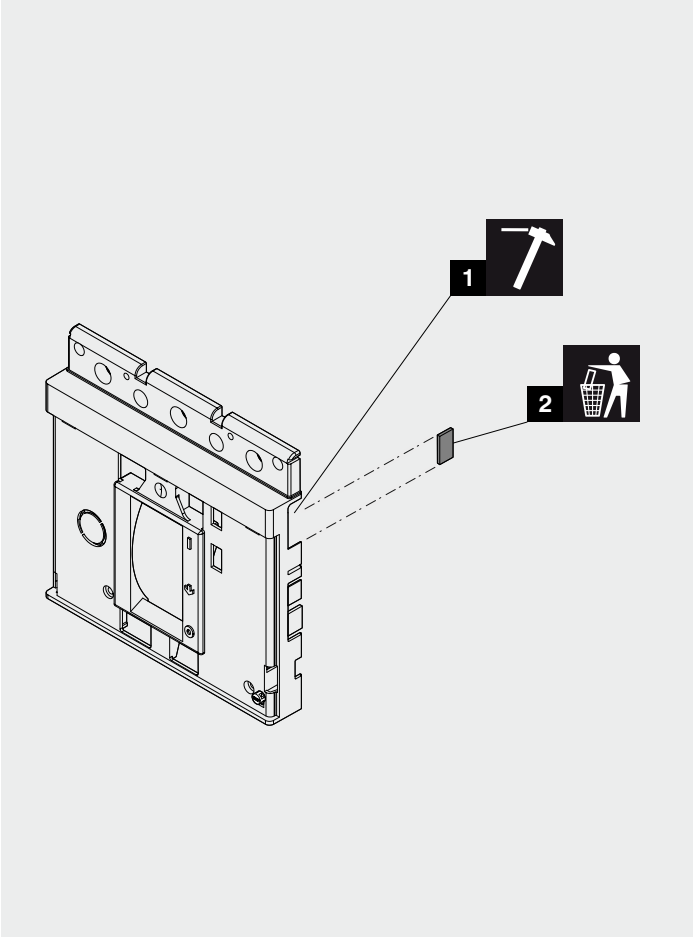
1
2

21 **W**

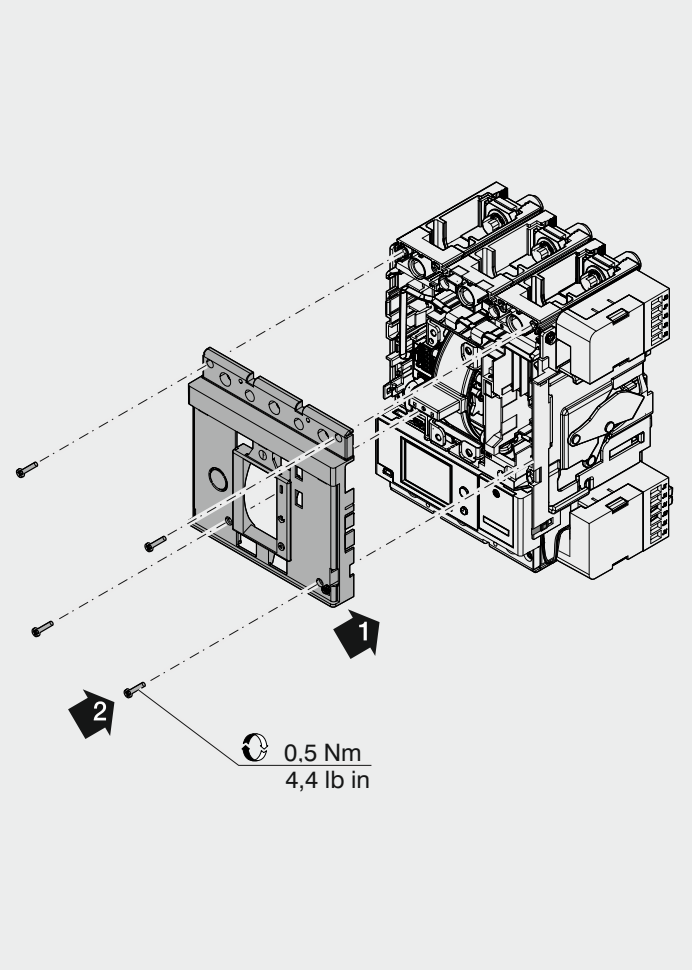

22 **W**

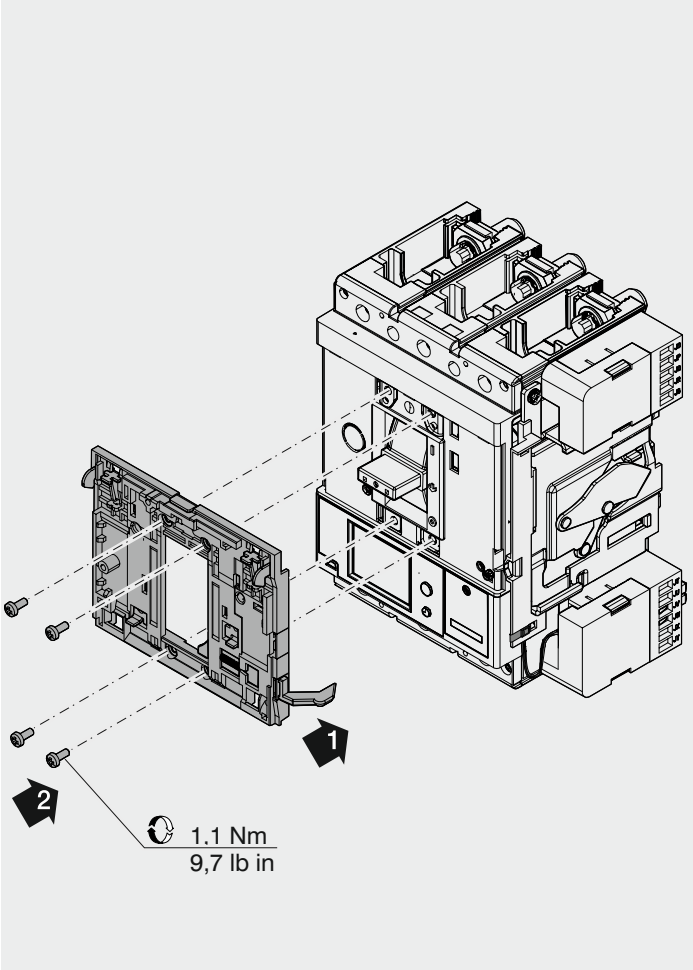

23 **W**

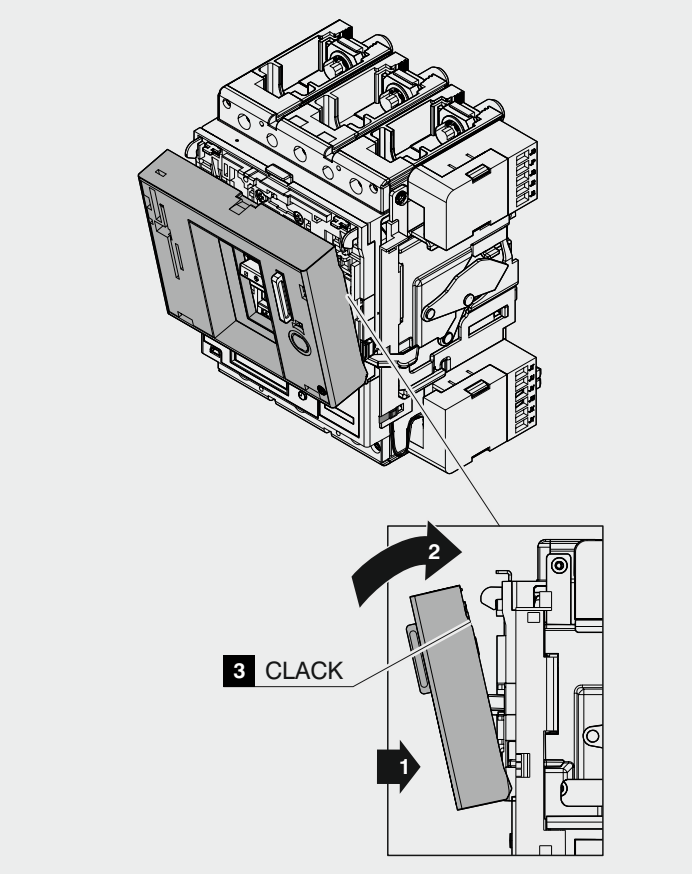

24 **W**

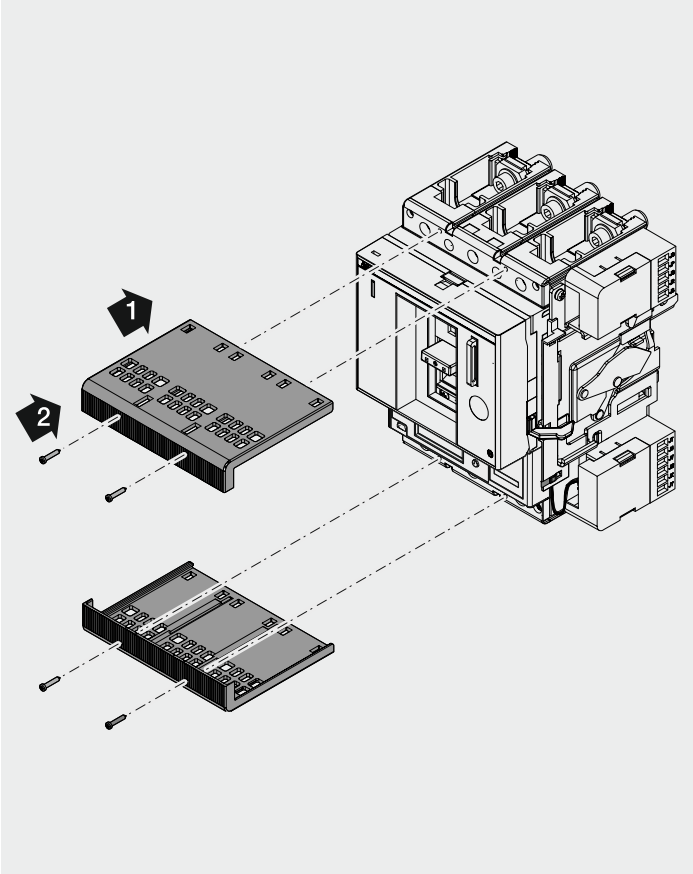

25 **W**

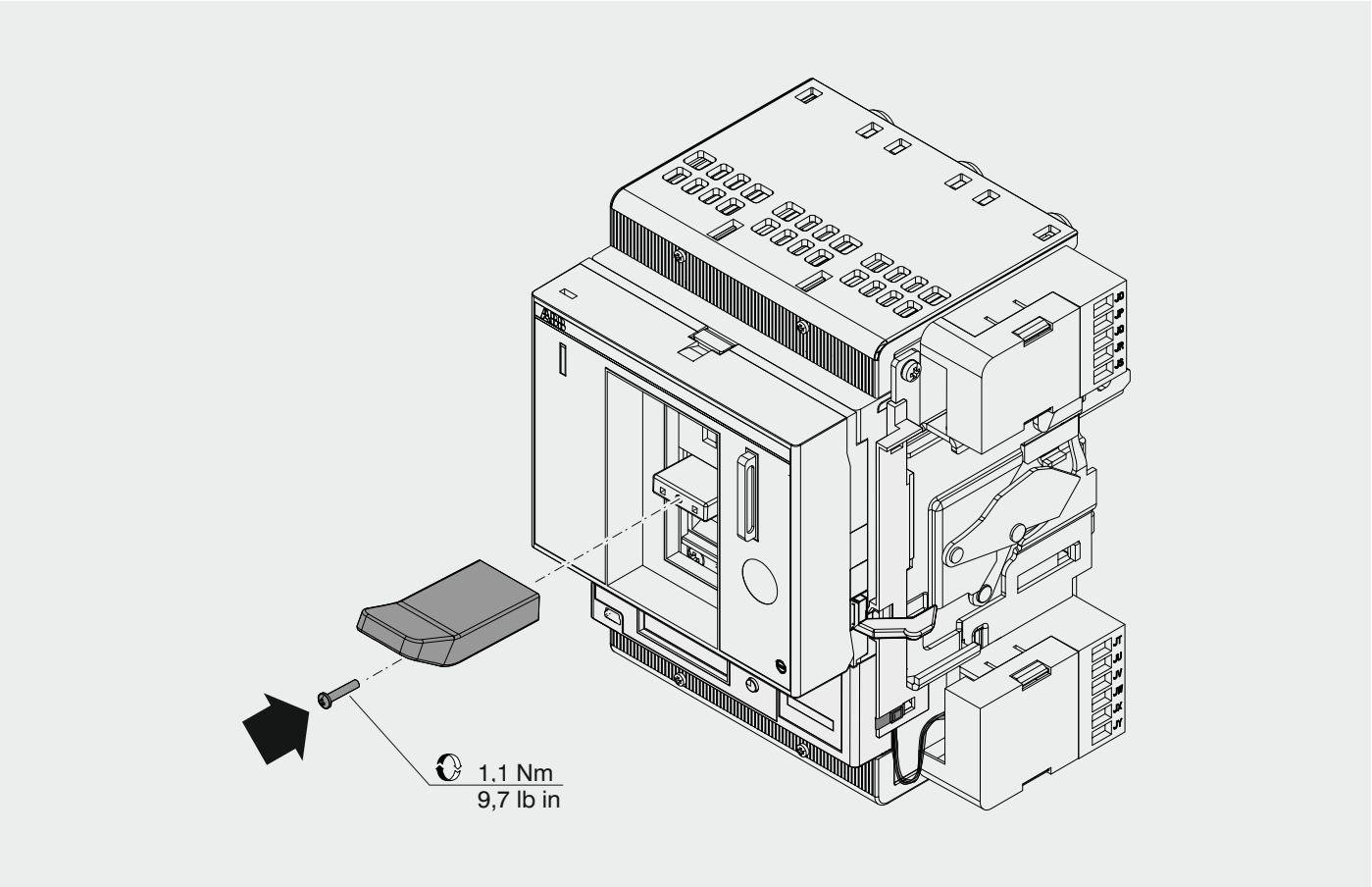

26 **W**

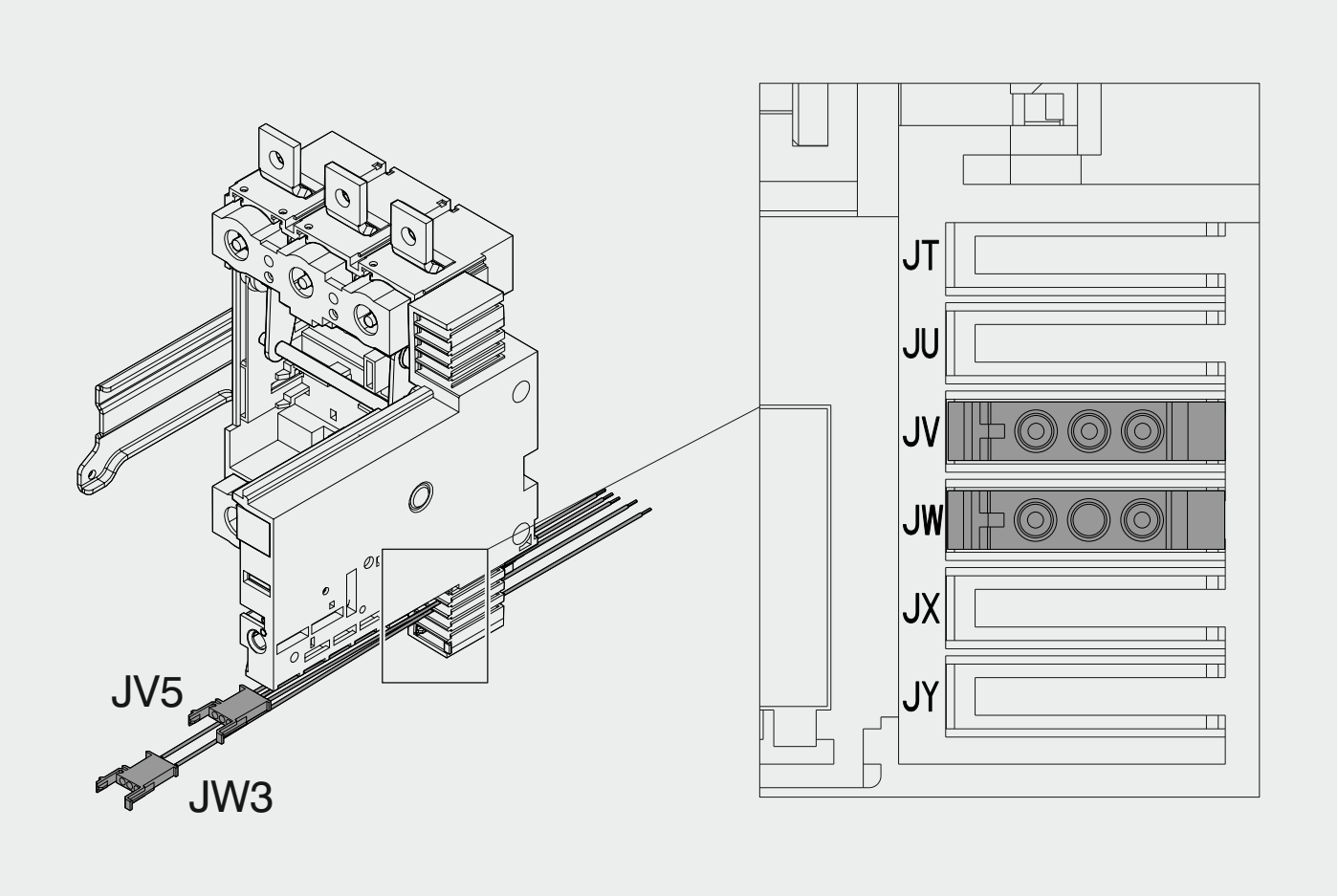

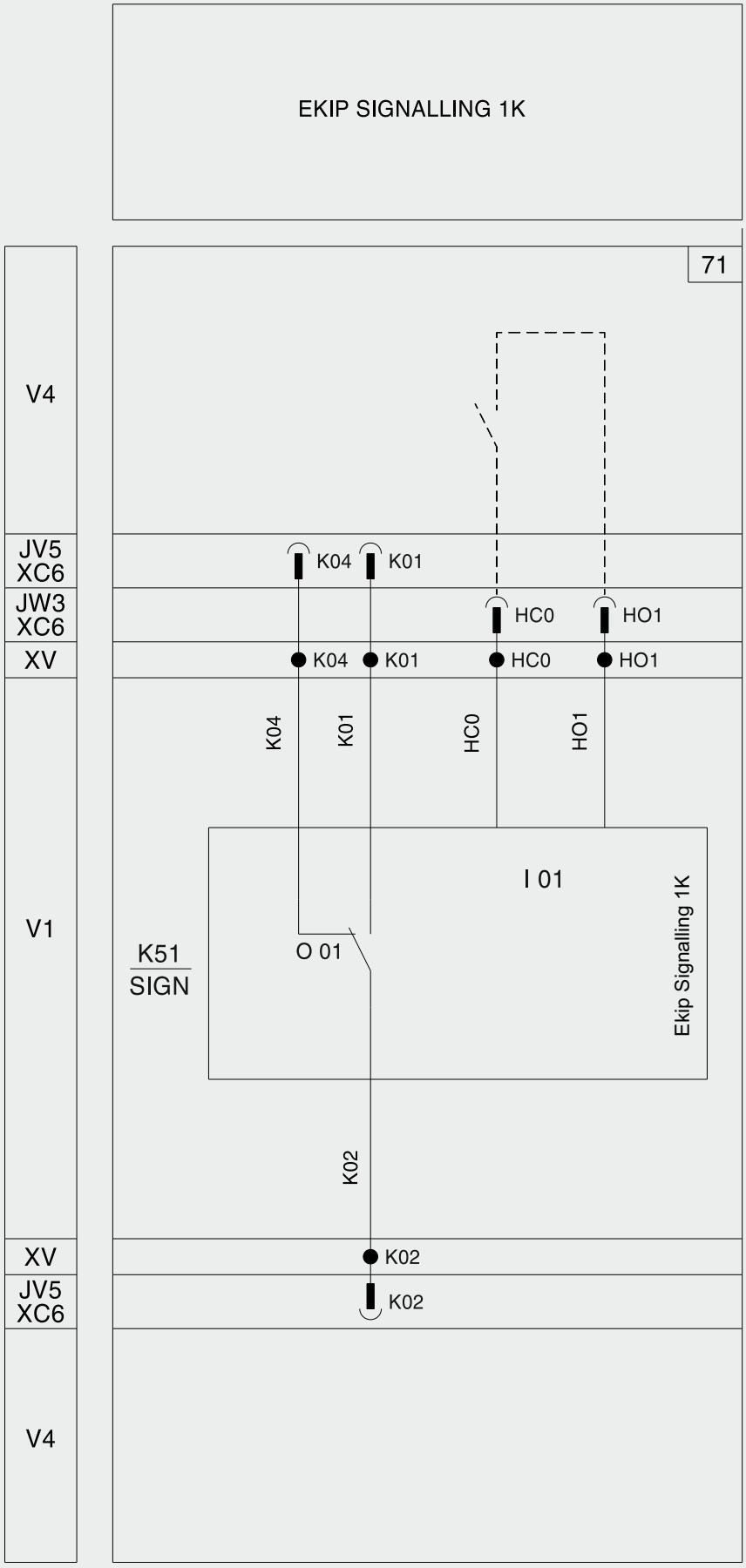

Per ulteriori informazioni vedere:
For further details consult:
Für weitere Informationen siehe:
Pour plus d'informations voir:
Para más información véase:
有关更多信息请参考:

1SDM000005A1001

© Copyright 2019-2020 ABB. All rights reserved.