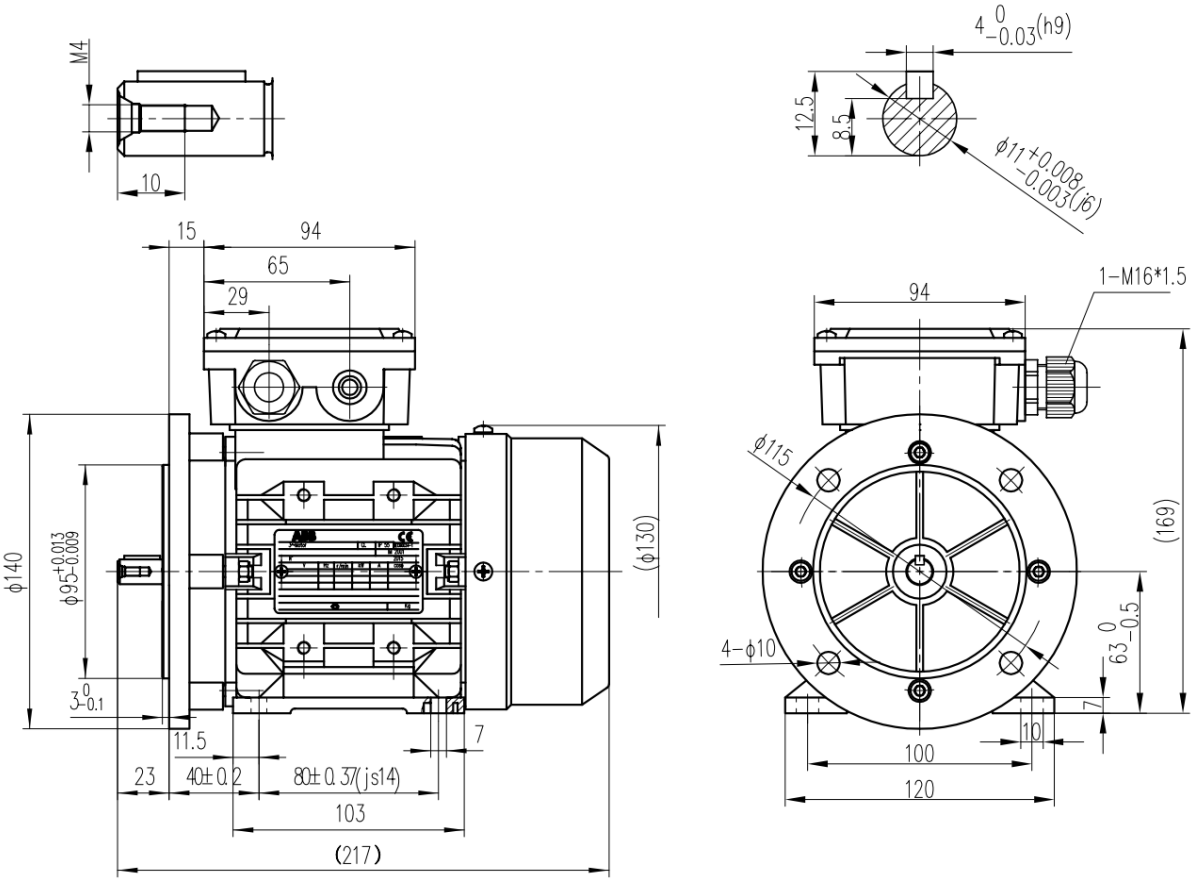

Additional information:

Dimension Print	Motor Type: M2(3)AA 063 (E) 2-6p B35, V35	Document No: 9AKK106713A0968
Description: Three phase motor		

Unit:	ABB Oy, Motors and Generators	Issued by:	J. Cieslikowski	Replaces:
Date:	31.08.2017	Approved by:	M. Kulon	Replaced by:

ABB Oy	Customer Reference:	ABB