Auxiliary unit for REG216/316*4 for 100% stator and rotor earth fault protection

REX010/011

1MRB520123-Ben
Page 1
Issued: March 2003
Changed since: June 2002

Data subject to change without notice

Features

- Compact design
- Perfectly matched for the REG216/ REG316*4
- Provides protection of the whole stator winding including the neutral point
- Continuous supervision of the injection voltage and the primary earthing system
- Suitable for two separate earthing points within the protected zone
- Continuous self-supervision of the injection signal with respect to amplitude and frequency
- Auxiliary DC power supply from station battery from 36 to 312 V DC
- Applicable for all commonly used earthing- and excitation-systems for generators
- Continuous supervision of the insulation resistance and calculation of the earth fault resistance
- The principle is based on the well-known offset method, using injection of a low frequency signal
- Suitable for updating existing plants
- Insensitive to external disturbances

Application

The unit is applied for the protection of generators in block configuration for earth faults on the generator side. For the implementation of the 100% stator and rotor earth fault protection using a REG216/316*4, an injection unit REX010 and the injection transformer REX011 are required. This injection equipment can be applied to all common generator earthing- and excitation-systems. The protection is active during all states of the machine, standstill as well as run-up and run-down.

Design

General

The earth fault protection is based on the injection of a coded signal. The resulting offset voltage is utilized to calculate the earth resistance (R_f).

The injection signal is produced in the injection unit REX010 and applied to the generator through the transformer unit REX011. For the coupling to the protected unit resistors (R_E, R_P) are used. For the rotor earth fault protection two capacitors are required in addition.

The measurement signals for earth fault protection are processed by the REG216 or the REG316*4 respectively.

The equipment described protects 100% of the generator stator winding. Two independent protection functions are applied: one for 95% and one, using a different algorithm, for 100% of the stator winding. The 100% function is calculating the earth resistance and the 95% function is measuring the neutral voltage displacement of the generator.

a) The 100% function protects 35% of the stator windings from the neutral point for $R_{f=0}$ and I_{0max} = 15 A

b) The 95% function (U>) protects 95% of the generator stator winding from the terminals. This results in an overlap (redundancy) of the two protection functions as seen in Fig. 1.

The 100% function increases in sensitivity with increasing earth fault resistance and decreasing earth fault current.

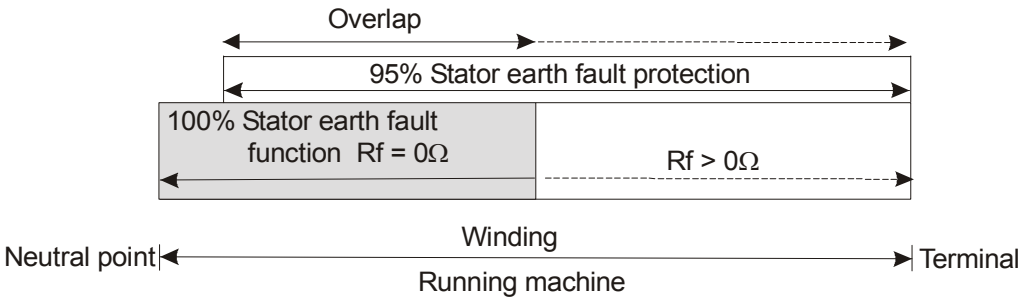

Fig. 1

At standstill the full stator winding (100%) is protected by the 100% function as seen in Fig. 2. At the same time the entire excitation winding is protected for earth faults. Because of the excellent rejection of external interferences, the REX010/011 can be applied to all types of excitation systems including thyristor type.

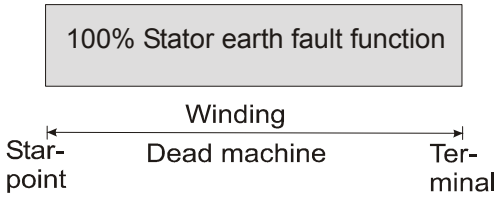

Fig. 2

Hardware

The protection equipment consists of the following units (Figures 4 – 8):

REG216/316*4: Numerical generator protection
REX010: Injection unit
REX011: Injection transformer unit with auxiliary contactor

In addition the following components are required:

- Earthing resistors in the generator neutral point (R_{Es}, R_{Ps}) and in the excitation circuit (R_{Er}, R_{Pr})
- Coupling capacitors in the excitation circuit of the rotor
- Voltage transformers

The injection unit (REX010) together with the injection transformer (REX011) produces three coded square wave signals (Uis, Uir, Ui) with a frequency $f_N/4$. These square wave signals are injected into the protected object via the coupling components. The three square waves have different amplitudes: Uis (Injection signal for the stator), Uir (Injection signal for the rotor) and Ui (reference signal for the REG216/316*4). The injection unit REX010 is connected to the station battery and the injection signal voltage is generated either by the battery or by an internal DC/DC converter.

The coding is achieved by alternating the transmission of the square wave with a quiescent period, as seen in Fig. 3.

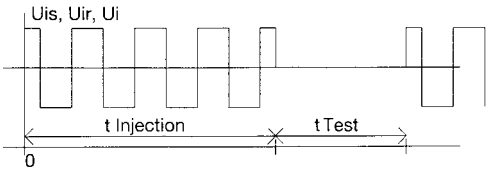

Fig. 3

The REG216/316*4 evaluates and compares the measured injected voltage with the reference voltage during the transmitting period. In the quiescent period the evaluation of possible interferences is active, ensuring the correct protection response. The injection transformer REX011 is equipped with a contactor, type P8. In the case that the earth fault current exceeds 5 A the contactor will open the input circuit to the injection unit to protect it against high voltages during earth faults near the generator terminals. The 95% function is always active and will detect any earth faults.

The resistors R_{ES}, R_{PS} are used to provide high-resistance earthing of the generator neutral point and for coupling the injection signal to R_{PS} as well as the measurement signal to R_{ES}. A similar arrangement applies for the generator rotor where coupling is made with the resistors R_{ER} and R_{PR}; however, two additional capacitors C_1 and C_2 are required.

There are three connection variants for the stator and two for the rotor earth fault protection.

Software

Three protection functions are available in the REG216/316*4 library:

- 100% Stator earth fault protection — Stator EFP
- Rotor earth fault protection — Rotor EFP
- 95% Stator earth fault protection — Overvoltage U>

During the transmitting period, the digital filter algorithms are calculating the instantaneous earth fault resistance from the input signal pairs Uis, Ui and Uir, Ui respectively.

During the quiescent period the filtered signals Uis and Uir are examined for interference from the protected object or the connected network. This examination is used to validate the previous calculation of the earth fault resistance.

The reference signal Ui is continuously supervised with respect to amplitude and frequency. This ensures that the injection signal is correct and that it has the correct frequency.

The primary earth connection of the protected machine is checked through evaluation of the capacitive component of the earth fault current during the transmitting period.

100% Stator earth fault protection function
This function consists of an alarm level and a trip level with corresponding signalling and tripping outputs.

It is possible to compensate for a second high-resistance earth to neutral point within the protected zone by including the monitoring of the generator circuit breaker status.

The function is capable of measuring the effective value of R_{ES} and of the transformation ratio of the voltage transformer while the machine is at standstill. This allows optimizing the function with the actual parameters of the protected machine.

Alarm and trip levels are entered and read out in kΩ.

Settings:

Alarm level	100 Ω to 20 kΩ
Delay	0.2 s to 60s
Trip level	100 Ω to 20 kΩ
Delay	0.2 s to 60 s
R_{ES}	250 Ω to 5 kΩ
Number of neutral points	2
R_{ES}-2. neutral point	900 Ω to 30 kΩ
Reset ratio	110% (with settings of <10 kΩ) 120% (with settings of >10 kΩ)
Accuracy	100 Ω to 10 kΩ: <±10% 0 to 100 Ω, 10 kΩ to 20 kΩ: <±20%
Operating time	1.5 s

Machine and system parameters:

- Max. earth fault current	I_0 <20 A (recommended I_0 ≤5 A)
- Stator earth capacitance	0.5 µF to 6 µF

Software (cont'd)

- Stator earth resistance R_{PS} — 75 Ω to 500 Ω
- Stator earth resistance R_{ES} — 250 Ω to 5 kΩ (≥4.5* R_{PS})
- R_{PS} // R_{ES} — >70 Ω

The effective earth resistances R_{ES}, R_{PS} and the transformation ratio of the voltage transformer must be calculated in accordance with the operating instructions.

Further details about settings of the various functions can be obtained from the REG216/316*4 data sheet.

Rotor earth fault protection
This function incorporates an alarm as well as a trip level with separate tripping and signalling outputs.

The function allows the measurement of the actual coupling capacitance while the machine is standing still. This measurement permits optimum settings with respect to the protected machine.

Alarm and trip levels are entered and read out in kΩ.

Settings:

Alarm level	100 Ω to 25 kΩ
Delay	0.2 s to 60 s
Trip level	100 Ω to 25 kΩ
Delay	0.2 s to 60 s
R_{Er}	900 Ω to 5 kΩ
Coupling capacitance	2 µF to 10µF
Reset ratio	110% (with settings of <10 kΩ) 120% (with settings of >10 kΩ)
Accuracy	100 Ω to 10 kΩ: <±10% 0 to 100 Ω, 10 kΩ to 25 kΩ: <±20%
Operating time	1.5 s

Machine and system parameters:

- Rotor earth capacitance — 200 nF to 1 µF
- Rotor earth resistance R_{Pr} — 100 Ω to 500 Ω
- Rotor earth resistance R_{Er} — 900 Ω to 5 kΩ
- Coupling capacitance — 4 µF to 10 µF
- Time constant — $T = R_{Er} \times C$ = 3 to 10 ms

The effective earth resistances R_{Er} and R_{Pr} must be calculated in accordance with the operating instructions.

Further details about settings of the various functions can be obtained from the REG216/316*4 data sheet.

Technical data

REX010 Injection unit
The injection unit REX010 is contained in a REG316*4 housing, therefore the specifications of the design details and the general data of the REG316*4 are applicable.

Supply voltage range:	36 to 312 V DC
Power consumption	<180 VA
Optocoupler inputs:	18 to 312 V DC (refer to table below)
Connection terminals:	HDFK (type Phoenix) 4 mm^2
Control and signalling devices: green LED on: red LED on: yellow LED on: ENABLE switch: DISABLE switch: RESET push button: Optocoupler input:	 Device ready Overload No injection Injection on Injection off Reset after interruption of injection Interruption of injection, reset after interruption of injection

REX011 Injection transformer

Type of auxiliary transformer	WU30Z
Primary voltage	2 x 110 V
Secondary voltage REX011 REX011-1 REX011-2	 110 V / 50 V Terminals UK5 (Phoenix) 5 mm^2 4 x 0.86 V / 50 V Terminals UHV50 (Phoenix) 50 mm^2 4 x 6.4 V / 50 V Terminals UHV50 (Phoenix) 50 mm^2
Auxiliary contactor	P8nax (8 normally open contacts)
HV test	2.5 kV common mode
Dimensions REX011 REX011-1, -2	 Mounting surface, 180 x 290 mm and 245 mm high Mounting surface, 180 x 290 mm and 275 mm high

Diagrams

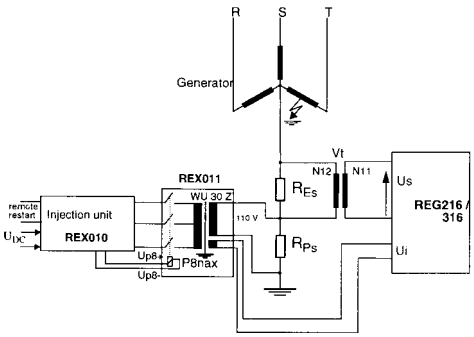

Fig. 4 Stator earth fault protection, star point

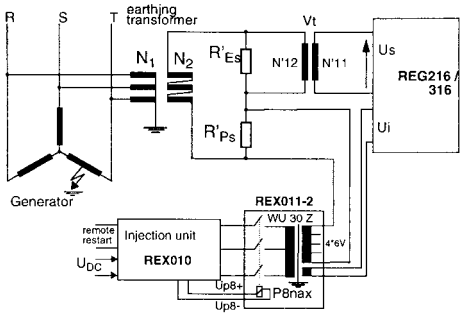

Fig. 5 Stator earth fault protection with earthing transformer on generator terminals

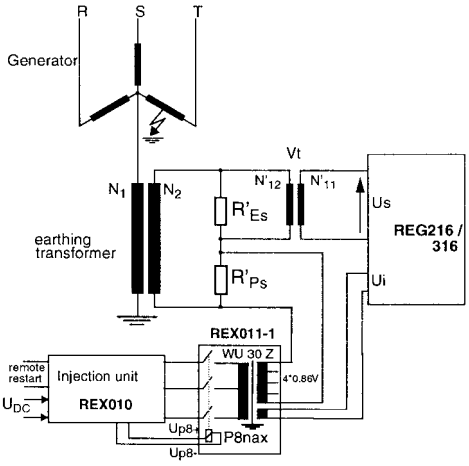

Fig. 6 Stator earth fault protection with earthing transformer on star point

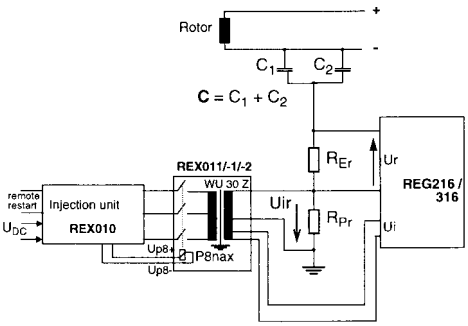

Fig. 7 Single pole rotor connection earthing with resistors

Diagrams (cont'd)

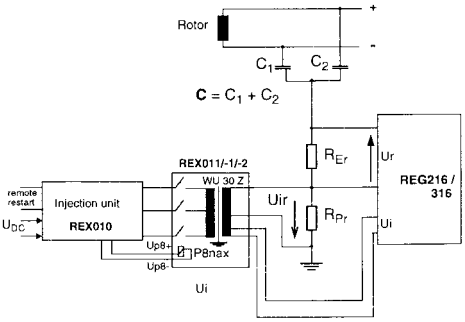

Fig. 8 Two pole rotor connection

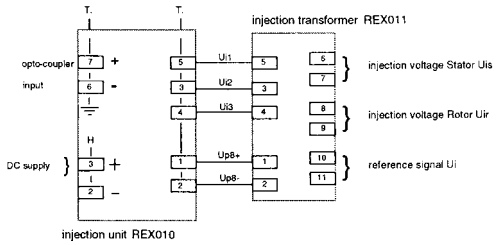

Fig. 9 Connection diagram REX010/REX011

Dimensions

All dimensions in mm

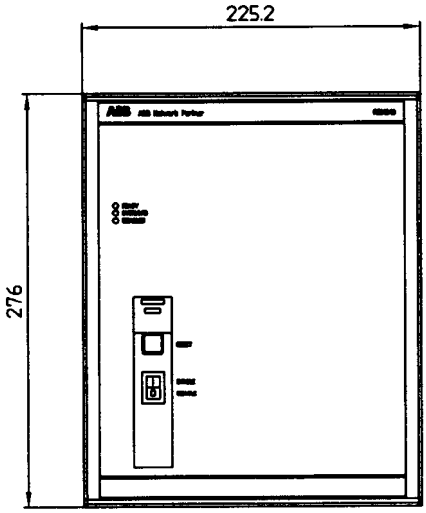

Front view

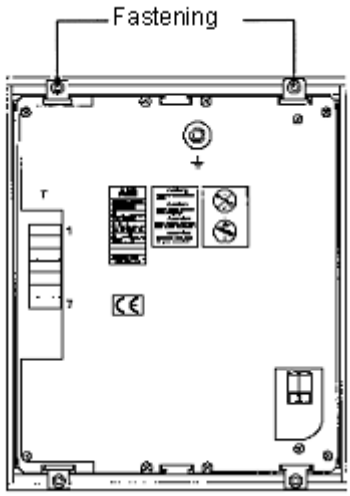

Rear view

Fig. 10 REX010 T = Input and output voltages cross-section = 4 mm^2
H = Auxiliary supply

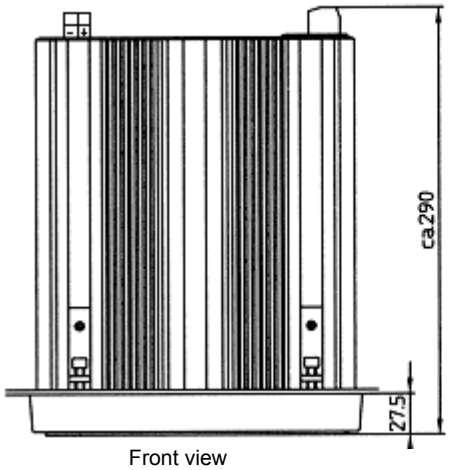

Front view

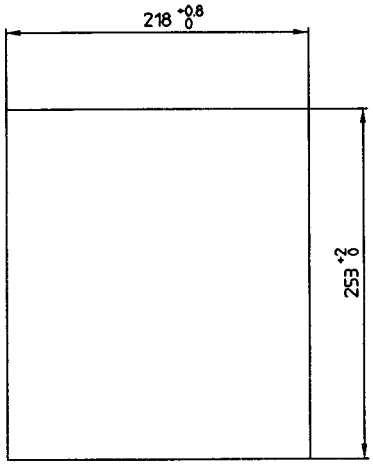

Panel cutout

Fig. 11 REX010

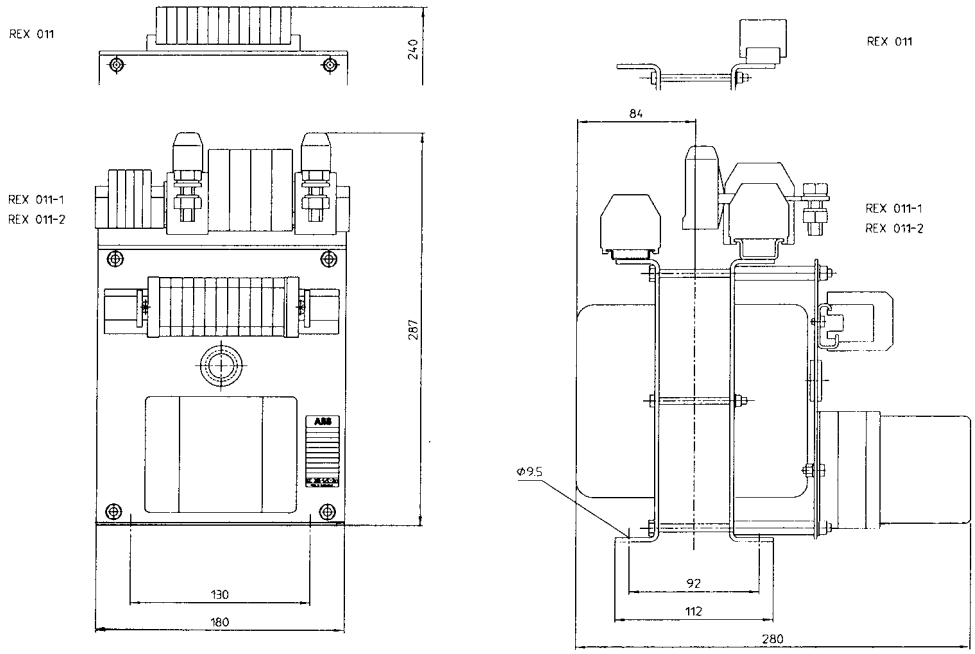

Fig. 12 Dimensions REX011, -1, -2

Ordering

Order codes for REX010/REX011

REX011 Injection transformer unit

REX011		HESG 323888 M1	Starpoint earthing with resistors	Fig. 4
REX011-1	R'_{Ps} >8 mΩ	HESG 323888 M11	Starpoint earthing with earthing transformer	Fig. 6
REX011-1	R'_{Ps} >32 mΩ	HESG 323888 M12	Starpoint earthing with earthing transformer	Fig. 6
REX011-1	R'_{Ps} >128 mΩ	HESG 323888 M13	Starpoint earthing with earthing transformer	Fig. 6
REX011-2	R'_{Ps} >0.45 Ω	HESG 323888 M21	Earthing transformer on generator terminals	Fig. 5
REX011-2	R'_{Ps} >1.8 Ω	HESG 323888 M22	Earthing transformer on generator terminals	Fig. 5
REX011-2	R'_{Ps} >7.2 Ω	HESG 323888 M23	Earthing transformer on generator terminals	Fig. 5

If R'_{Ps} is not yet known when ordering, please order M11 resp. M21. The version required later may be rewired.

REX010 Injection unit

Function	Value	Code
Battery voltage	36 to 312 V DC	U0
Frequency	50 Hz 60 Hz	F5 F6
Optocoupler voltage	82 to 312 V DC 36 to 75 V DC 18 to 36 V DC	I3 I4 I5

Order-No. HESG324426M0001 + Code
REX010 offers two options according to the available battery voltage.

Ordering (cont'd)

Ordering example

Generator with the earthing transformer at the neutral point (R'_{PS} >32 mΩ), system frequency 50 Hz, battery voltage 110 V DC, which is also used for optocoupler inputs.

Order description:

1 REX010 - HESG324426M0001
Code U0/ F5 /13
1 REX011- HESG323888M12

The associated earthing resistors as well as the coupling capacitors 2*2 µF (Leclanche MIH 800-2) for the rotor earth fault protection may be ordered through ABB Switzerland Ltd.

The associated protection package/system REG216/REG316*4 must be ordered separately, according to the appropriate Data Sheet.

References

REG 316*4 Data Sheet	1MRK502004-Ben
REG316*4 Operating Instructions (printed)	1MRB520049-Uen
REG316*4 Operating Instructions (CD)	1MRB260030M0001
REG216 Data Sheet	1MRB520004-Ben
REG216 Operating Instructions (printed)	1MRU02005-EN
REG216 Operating Instructions (CD)	1MRB260030M0001

ABB Switzerland Ltd
Utility Automation Systems
Brown-Boveri-Strasse 6
CH-5400 Baden/Switzerland
Tel. +41 58 585 77 44
Fax +41 58 585 55 77
E-mail: substation.automation@ch.abb.com

www.abb.com/substationautomation

Printed in Switzerland (0303-0000-0)