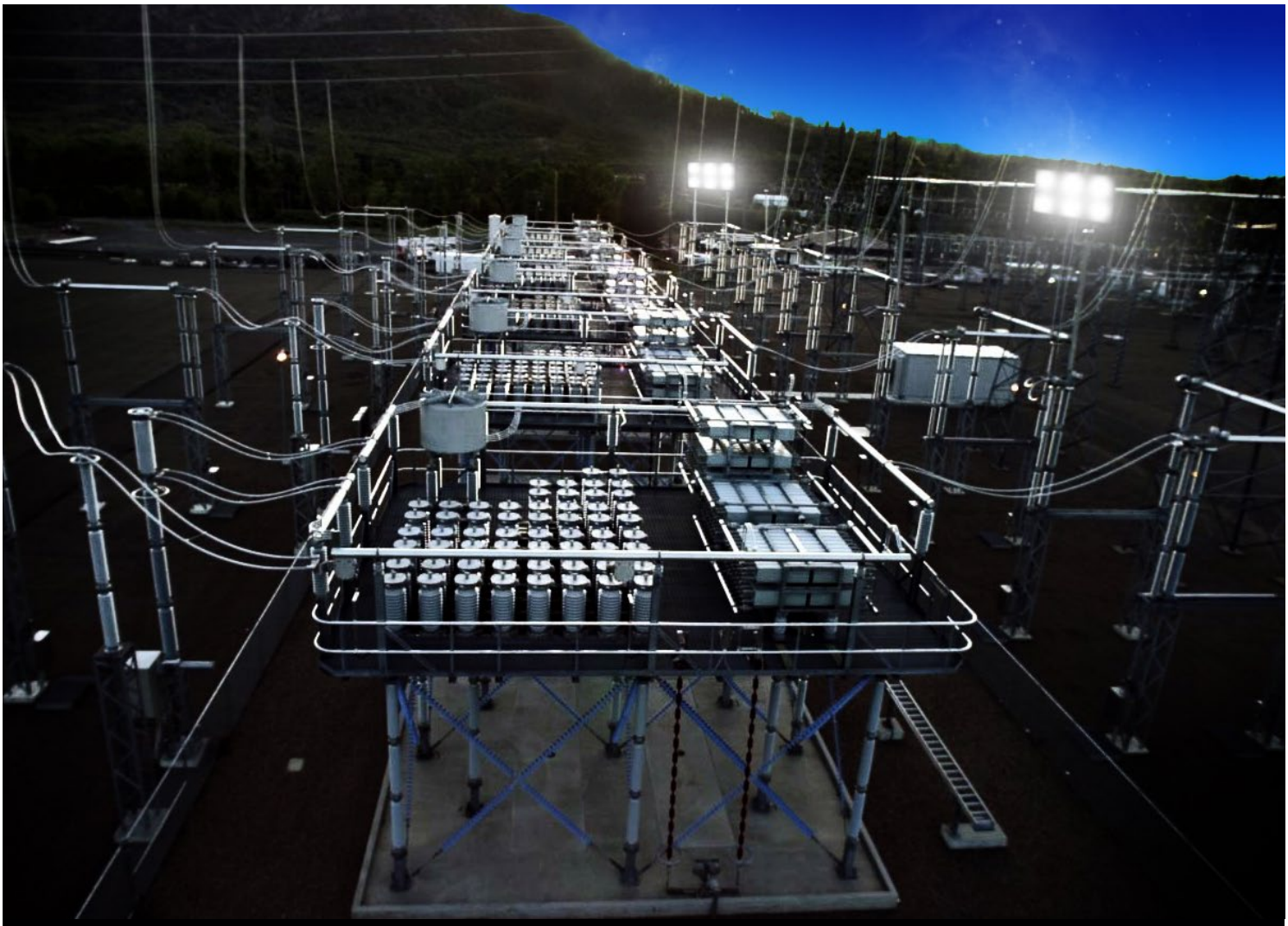

Series Compensation
Boosting transmission capacity

Power and productivity
for a better world™

Why settle for less...

Worldwide urbanization and rapid industrialization are putting utilities under increasing pressure. This fast growing demand jeopardizes reliable and high quality power supply. Yet the global trend towards deregulated power markets means any new investment must be competitive. At the same time, environmental awareness questions the construction of additional overhead transmission lines.

However, ABB can help you solve this dilemma. In many cases, cost effective series compensation enables more power to be transmitted through existing lines at a fraction of the cost and time expenditure of a new line. Likewise it makes greenfield power transmission projects more cost effective and more environmentally acceptable by reducing the number of lines required.

...when more is within reach?

ABB implemented its first series compensation solutions in the 1950s. Since then, we have continued to develop and refine this technology. Today, our know-how and problem solving capabilities help make us the world leader in effective power transmission.

Compensate the inductive reactance

Series compensation employs capacitors to compensate the inductive reactance of long lines. It is a highly effective and economical means of improving power transfer. Suitable for both new and existing lines, series compensation increases power transfer capability by raising the transient stability limit as well as improving the voltage stability. Another important benefit is reduced transmission losses by optimizing the sharing of active power between parallel lines.

Squeezing more power out of existing lines can eliminate the need to build new lines which all adds up to reduced environmental impact, and significant cost and time savings.

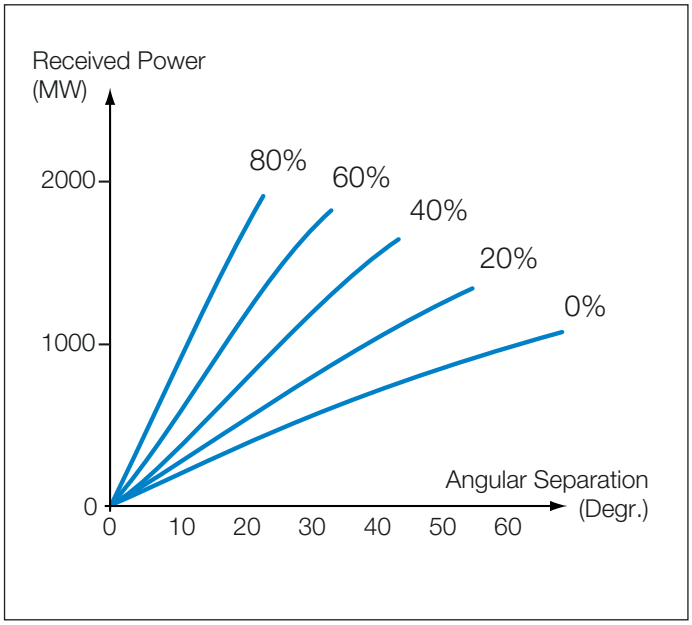

ABB Series capacitors include the following major components:

Capacitor Bank

Damping Circuit

Metal Oxide Varistor

By-Pass Switch

Fast Protective Device

Control System

Series capacitors save environment, forest and land!

Fewer lines needed with series compensation

Example of large uncompensated AC power transmission corridor

Cost effectiveness of series capacitors

Case 1

The cost advantages of ABB series capacitors can be demonstrated by a direct comparison of alternative solutions. The following two scenarios document the cost efficiency of series capacitors.

An existing 1 300 MW transmission system using two parallel 500 kV lines is to be upgraded to a 2 000 MW system. The options are to series compensate the two existing lines or build a third parallel line.

Cost Analysis

The total investment for compensating the two existing lines will be approximately 10 percent of building a third, parallel line.

Additionally, this does not take into account the substantial time savings of upgrading existing lines rather than constructing new ones. In many countries, permission to build new lines can be extremely difficult, if not impossible, to obtain today, and it is not uncommon for this process to take 5-10 years. In addition to this, several years must be added for the construction, depending on terrain and distance, and other related concerns.

Case 2

A new transmission system is to be built to transmit 2 000 MW from a power station to the load area. The investment costs for the equipment, including cost of losses, have been calculated for two alternative transmission systems – one compensated and one uncompensated.

System A. Two parallel 500 kV lines with 40 percent series compensation, divided into three line sections.

System B. Three parallel 500 kV lines without series compensation, also divided into three line sections.

Cost Analysis

The total investment cost of system B, (three uncompensated lines), will be some 35 percent more than that of the two compensated lines (system A). The series capacitors themselves constitute just 10 percent of the total investment for the compensated system.

System A

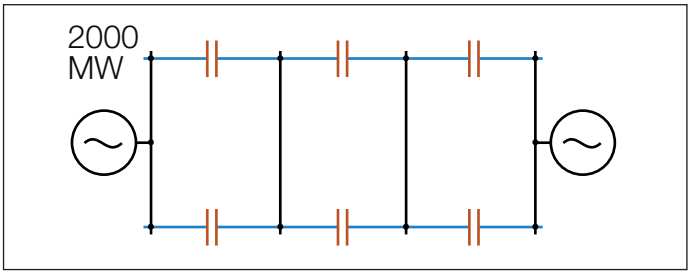

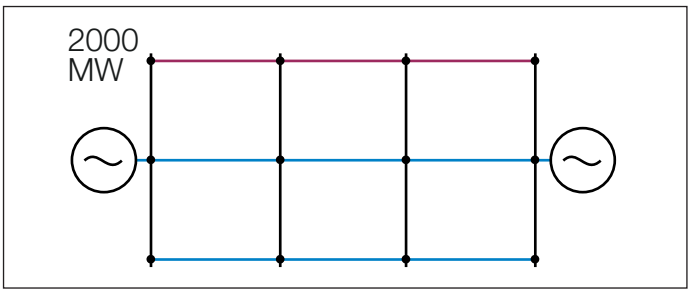

System B

Series compensation tailored to each demand

ABB's experience of planning, design, installation and commissioning enables series capacitors to be tailored to any requirements.
By adopting a standardized, modular approach to control, protection and supervision, every application is sure to be reliable and virtually maintenance free.

Optimize your power transmission

Adding series capacitors to your network will significantly boost power transmission while drastically reducing investment and maintenance costs in relation to other possible alternatives.

Long transmission distance is one of the main reasons to introduce series compensation. In Argentina for example, series capacitors have been installed to transmit vast amounts of environmentally friendly hydro power from the Comahue region in south western Argentina to Buenos Aires, a distance of over 1 000 km.

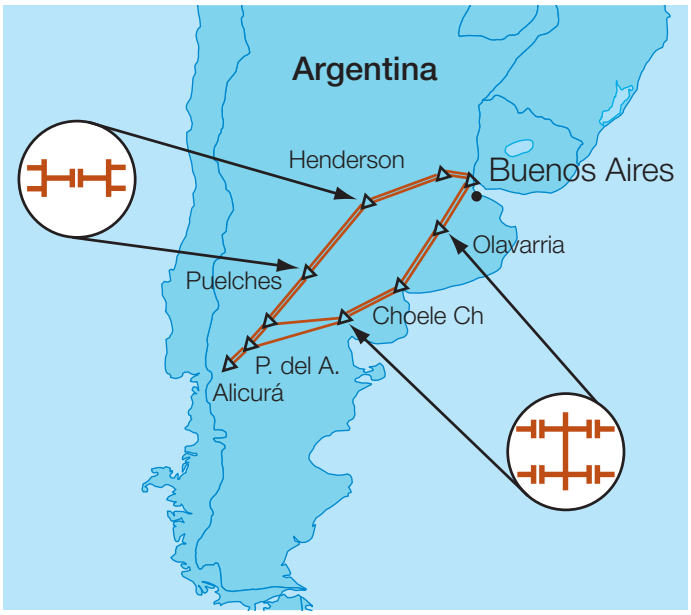

Multifunctional

Series capacitors raise the transient stability limit of the 500 kV lines, improve the reactive power balance and voltage regulation, and improve the active power sharing between the lines. Due to the prevailing circumstances, the Comahue-Buenos Aires 500 kV power corridor installation would have been both more expensive and more land and time consuming without series compensation.

With four series compensated lines in operation, the overall power transmission capacity of the power corridor reaches 4600 MW.

A similar tale can be told in British Columbia, Canada. Series capacitors were installed in a new line segment running parallel with two existing lines carrying hydro power to Vancouver, a distance of over 900 km. The series capacitors secure balanced power flow by improving load sharing between the parallel lines. A total transfer capability of 3 300 MW can be maintained even if one of the three lines is lost.

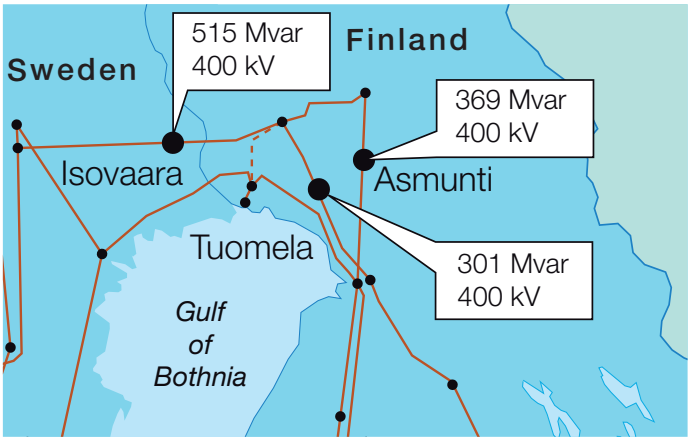

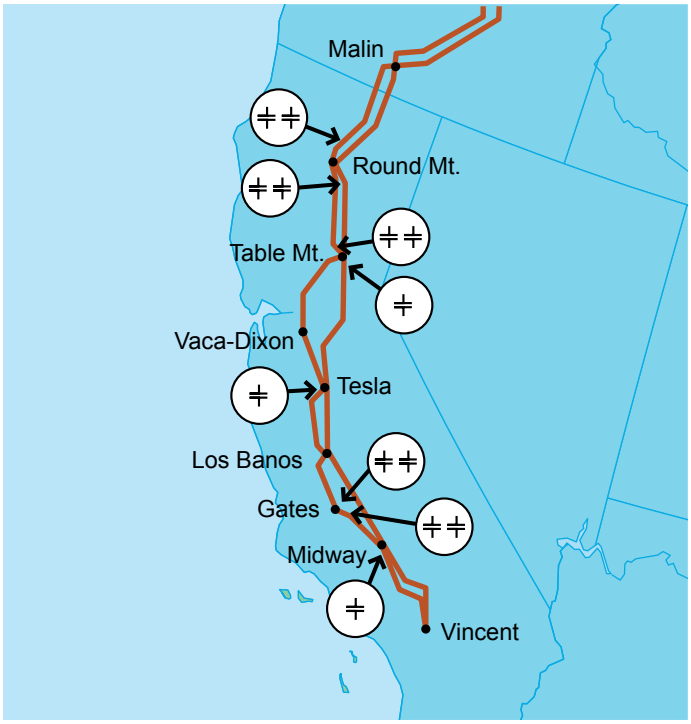

Power – When and where you want It

A key objective for every power provider is to deliver power whenever and wherever it is needed – twenty-four hours a day, 365 days a year. To do this, a reliable and stable network that performs smoothly even when power patterns change and disturbances occur, is imperative.

In the far north region of neighboring Sweden and Finland, several series capacitors are operated for increased power transmission capability under stable conditions over an existing 400 kV dual line interconnector between the two countries. As a benefit, an optimum exchange of power can be maintained between the countries at all time.

Continuous improvement process

In California, USA, on the Pacific Intertie, the benefits of series compensation were adopted early on. Heavily loaded, and with load increasing all the time, the long, double circuit 500 kV interconnector has gone through extensive and continuous upgrading of its series compensation. The gains have been continuously increasing power transmission capability on the existing lines as well as decreasing maintenance costs.

With 13 ABB series capacitors in operation, all together rated at over 5 000 Mvar, the Pacific Inertie continues to supply power in a safe way to power hungry California.

Suitable for most networks

Series capacitors are suitable for transmission and subtransmission networks alike. In Hólar, Iceland, a series capacitor compensates approximately 70 per cent of the reactance of a 132 kV network. In the harsh Icelandic environment, where there can be vast distances between the power source and end user, the series capacitor increases the power transmission capability and stability of the network.

Self-regulating

Series capacitors are self-regulating. When the transmitted power increases in the network, so does the reactive power generation of the series capacitors. This function, allied to a state of the art control and protection system that responds within milliseconds, makes series capacitors extremely reliable. It also means minimal maintenance and supervision, which all adds up to substantial cost and time savings.

Main schemes

Of course, a series capacitor is not just a capacitor in series with the line. For proper functioning, series compensation requires control, protection and supervision to enable it to perform as an integrated part of a power system. Also, since the series capacitor is working at the same voltage level as the rest of the system, it needs to be fully insulated to ground.

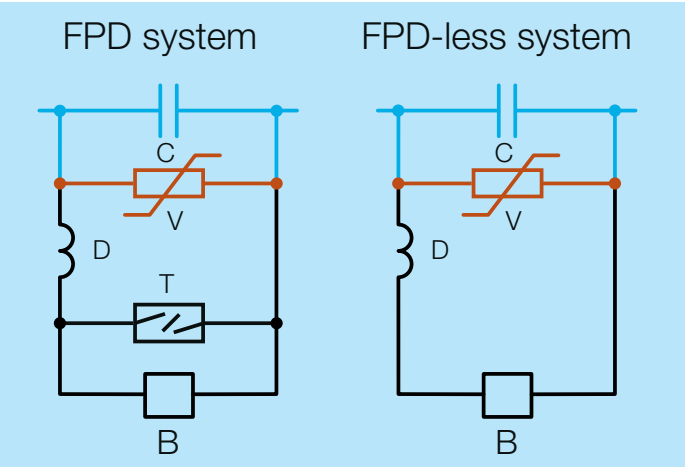

C	Capacitor	T	Fast protective device
V	MOV (ZnO varistor)	B	By-pass switch
D	Damping circuit		

To protect series capacitors against over-voltages caused by faults in the surrounding network, each installation is equipped with a scheme in which a MOV or Zinc Oxide (ZnO) Varistor constitutes the main protection.

During normal operating conditions, all power flows through the series capacitor. When a fault arises, the highly nonlinear varistor is used to limit the voltage across the series capacitor to safe values. When the fault is cleared, the varistor immediately ceases to conduct and the series capacitor instantly reverts to normal operating conditions.

Depending on the environment in which the series capacitor is to operate, a ZnO scheme with or without FPD (Fast Protective Device) will be specified.

FPD scheme

In cases where the varistor energy absorption capability would otherwise be exceeded, such as in conjunction with internal faults, or external faults of an extreme nature, a Fast Protective Device is utilized to by-pass the varistor. Closing a by-pass switch follows as the next step in order to by-pass the series capacitor. On fault clearing, the series capacitor is reinserted into operation by opening the switch.

FPD-less scheme

In situations where the the duty cycle of the ZnO varistor is less severe but might still be exceeded in conjunction with internal faults or some external faults, it is sufficient with a by-pass switch which operates to by-pass the series capacitor. Upon clearing of the fault, the by-pass switch is opened, and the series capacitor is reinserted into operation.

Capacitor Bank

The capacitor bank consists of capacitor units connected in series and parallel to obtain the required total Mvar ratings. The capacitor units consist of an all film design with a biodegradable impregnant. The capacitor units are equipped with internal discharge resistors to fulfill the discharge requirements according to applicable standards. Internally fused capacitor units are usually chosen in order to optimize the overall configuration.

Metal Oxide Varistor

The Metal Oxide Varistor (MOV) overvoltage protection is made from individual MOV blocks that are connected in series in order to achieve the desired protective level and in parallel in order to obtain the required energy absorption capability. The MOV blocks are assembled in stacks with high strength silicone rubber polymer housings or porcelain housings, according to specification.

Damping Circuit

The purpose of the current limiting damping circuit is to limit and damp the discharge current caused by spark gap operation or closing the bypass switch. The current limiting damping circuit normally consists of an air core reactor. In case high damping of the discharge current is required, a damping resistor is connected across the reactor.

By-Pass Switch

The ABB bypass switch is an Auto-Puffer type SF_6 circuit breaker. With a closing time less than half of that of other bypass switches, it is the fastest bypass switch available on the market for EHV Series Capacitor applications. This enables a great saving on MOV in the protective scheme.

Each pole is equipped with an operating mechanism to obtain sufficient stored energy without recharging in order to meet the duty cycle (O)-C-O-C.

Choosing the optimum scheme

Optimization with regard to the environment in which the series capacitor is called upon to operate is key to the scheme selected.

In a fault situation of a severity which calls for temporary by-passing the series capacitor, the FPD enables by-pass of the varistor a hundred times faster than a by-pass switch. This means that typically, the FPD scheme requires less varistor capacity in a certain operating environment of the series capacitor. The plain ZnO scheme, which relies solely on the by-pass switch for bypassing the varistor in a fault situation, will typically require a larger varistor size to make up for the slower bypass. This, however, may still be attractive if the series capacitor operates in a network where fault currents are never severe, and the required varistor rating is correspondingly limited.

The scheme which represents the highest benefit for the customer at the lowest cost will be chosen for each individual situation. This deliberation is a basic ingredient in series capacitor design.

CapThor™

CapThor is a novel protective device for Series Capacitors, replacing conventional forced triggered spark gaps in various combinations with MOVs.

CapThor is a switch consisting of two high voltage modules. The modules comprise one Arc Plasma Injector (API) and one Fast Contact (FC) respectively, enclosed in composite insulator housings. The two modules are connected in parallel and are very compact when compared with conventional spark gaps. The two high voltage modules are hermetically enclosed and filled with synthetic air at an over-pressure. The function of CapThor is independent of environmental conditions and designed for high series capacitor protection levels and fault currents.

CapThor does not need any electrode adjustments for project specific capacitor voltages or fault currents. It does not suffer from the conventional spark gap dilemma - electrodes having to be close enough for secure operation, but separated enough not to unintentionally spark over – as it does not require a high electrical field between the electrodes to operate.

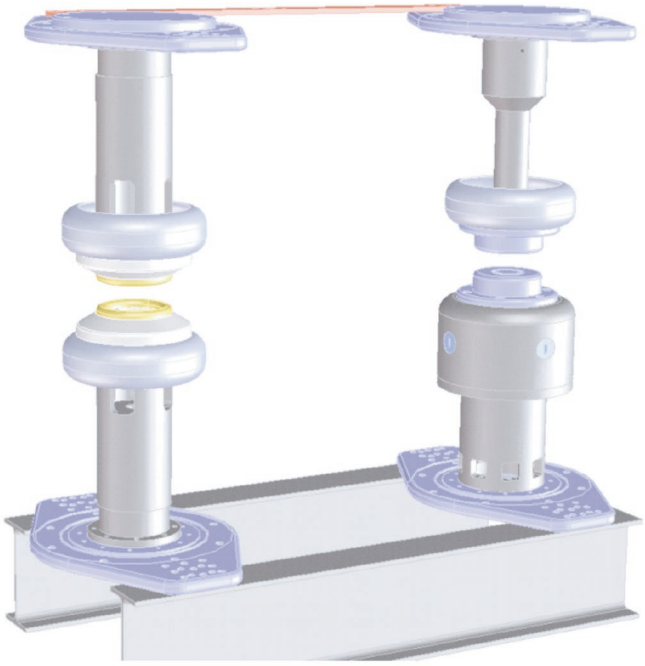

CapThor without housings: the Arc Plasma Injector to the left and the Fast Contact to the right.

Control and protection system: MACH

To meet the requirements for control and protection both today and into the future, ABB has developed a fully computerized modular control and protection system. The highly integrated concept, called MACH, is based on ABB's extensive engineering expertise to further improve the performance and efficiency of power systems.

MACH is specifically designed for FACTS applications and uses industry standard computers, microcontrollers and digital signal processors connected by high performance buses and fiber optic communication links.

Modular construction

The control and protection system supervises all functions of the series capacitor and provides protective action in the event of faults such as capacitor overload or unbalance, flashover to platform or ZnO varistor overload.

The system is duplicated to form a fully redundant protection concept.

The MACH system has a modular building block concept, based on high performance standard computers, referred to as the Main Computer. A typical Main Computer is a motherboard of PC architecture with multi-processing features. Add-in boards are available for future expansion and connection to the distributed I/O. The boards are equipped with digital signal processors (DSPs), for signal processing and fast calculation.

Station control and monitoring

The Station Control and Monitoring system including Human Machine Interface for visualization of the station, supervisory control and data acquisition, is based on one or several standard Windows NT Operator Workstations (OWS). The main OWS software is the InTouch application, specifically designed for operator control.

Control and Protection System

The MACH concept is built with open interfaces. This elegantly enables remote control and interrogation to be implemented. ABB has developed an internet-based concept for remote control and supervision of FACTS installations, we call it FACTS ON-LINE. This way we are never far away.

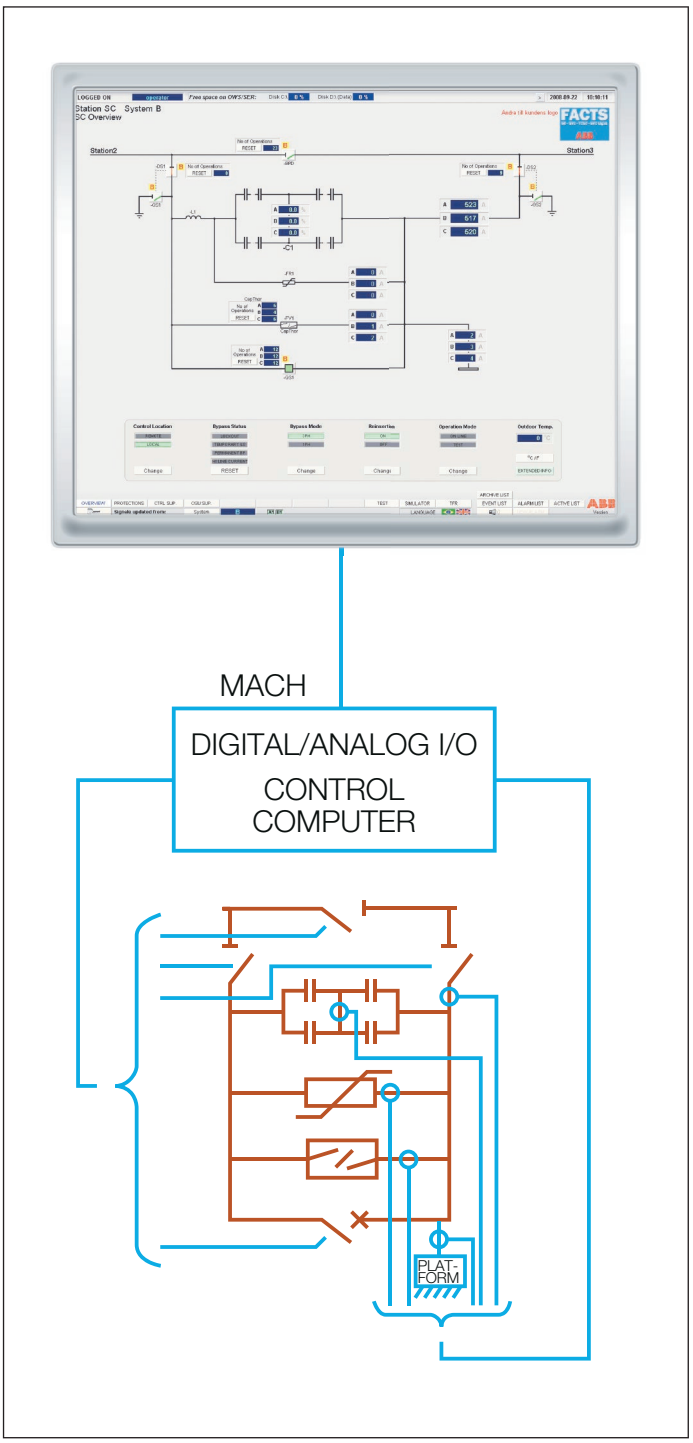

MACH features and benefits:

- High computing capacity
- Remote control
- Remote interrogation
- Minimum maintenance
- Shorter delivery times
- Easy upgrading

Main functions of the OWS:

The Operator Work Station handles the communication between the user and the control system of the series capacitor. It provides:

- Full graphic status displays of the series capacitor
- Display and control of protective settings
- Display of alarms and sequence of events lists
- Transient fault recordings (TFR)

Platform to ground communication

As the series capacitor operates in series with the line, it must have full system level insulation to ground. For transmission voltages in excess of 145 kV, this is usually solved by mounting the series capacitor on fully insulated steel platforms, one platform for each phase.

For communication between platforms and ground, fiber optic transmission links are utilized. The system employs optical current transducers for current measurements on the platforms. The measured signals are brought to the control room via optical fibers where all protection and control functions are performed.

Major benefits of system

- No control or protection equipment located on platform.
- No auxiliary power sources needed on the platforms.
- No multiplexing of measured quantities.

Optical current transformers

Current measurements are performed by means of Optical Current Transformers consisting of a Current Transducer in the high voltage busbar and an Optical Interface Board in the control room. Signal transmission between the transducer and interface is via an optical fiber system including high voltage links and fiber optic cables.

Each Optical Interface Board handles six separate current channels. It includes laser diodes to power the transducers and detector circuits to receive and decode light pulses from the transducers.

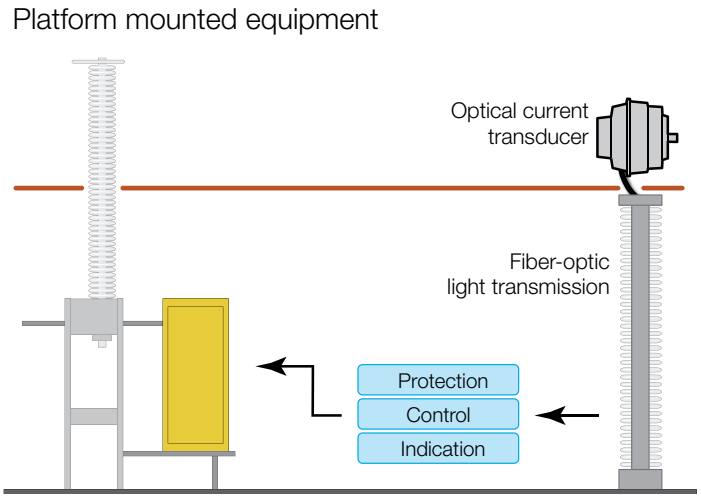

Thyristor Controlled Series Compensation

Controllable series capacitors can optimize their degree of compensation over a wide range under various network conditions. This is done partly or fully by means of thyristor control. Thyristor controlled series capacitors (TCSC) can be employed in a range of circumstances to improve power transmission performance.

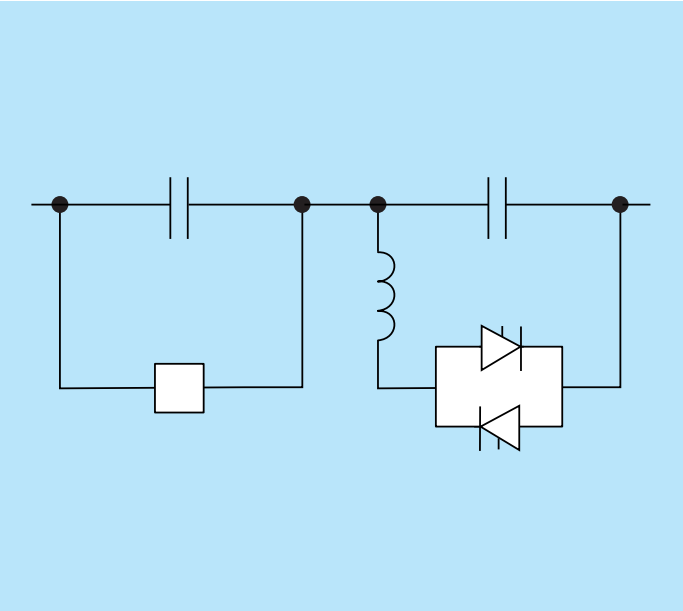

By adjusting the degree of compensation to the network operating conditions, the level of firm power delivered through a specific line can be controlled. Power flow can also be distributed through several parallel lines to secure transfer capability in the event of an outage in part of the system, or to achieve the lowest possible transmission losses.

In networks connected by weak links, TCSC can be used to damp active power oscillations caused by disturbances to the system.

Where Sub-Synchronous Resonance (SSR) is an issue, TCSC offers an effective means of mitigation.

As an example, a nuclear power station in central Sweden is connected to the north of the country via a number of 400 kV lines of varying length; all series compensated for increased power transmission capability.

One of the generator units is subject to the risk of SSR in conjunction with certain fault situations in the power grid. To counteract this, an existing series capacitor was rebuilt as a thyristor controlled series capacitor. This has eliminated the SSR risk for all possible system operating conditions and thereby increases the availability of active power over the system.

ABB developments and achievements

1954
ABB supplies the world's first 400 kV series capacitor in Sweden.

1977
ABB commissions the world's first series capacitor with a varistor protective scheme in Argentina.

1988
ABB supplies the world's largest 500 kV series capacitor with ZnO protection in USA – designed to withstand severe earthquakes.

1989
ABB commissions the world's first series capacitor for 800 kV system voltage.

1991
ABB develops the world's first full scale thyristor switch for a controllable series capacitor.

1999
ABB commissions the world's first full scale thyristor-controlled series capacitor for Sub-Synchronous Resonance mitigation in the 400 kV grid in Sweden.

1999
ABB commissions a full scale thyristor-controlled series capacitor for damping of power oscillations in a 500 kV power system interconnection in Brazil.

2004
ABB comissions two thyristor-controlled series capacitors for interconnection of two regional grids in the Indian 400 kV system.

2007
ABB supplies the world's first environmentally proof Fast Protective Device in North America, South America and Asia.

Contact us

ABB AB
FACTS
SE-721 64 Västerås,
SWEDEN
Phone: +46 (0)21 32 50 00
Fax: +46 (0)21 32 48 10

www.abb.com/FACTS

A02-0135 E, 2015-03, Elanders Sverige AB

Power and productivity
for a better world™