21, rue d'Artois, F-75008 PARIS
http : //www.cigre.org

B5-201

CIGRE 2008

EXPLOITING THE IEC 61850 POTENTIAL FOR NEW TESTING AND MAINTENANCE STRATEGIES

Walter Baass[1], Klaus-Peter Brand[1], Stephan Gerspach[1], Martin Herzig[2], Andy Kreuzer[3], Tetsuji Maeda[1]
[1]) ABB Switzerland Ltd, [2]) Atel, [3]) NOK
Switzerland

SUMMARY

The IEC 61850 standard for communication in substations not only provides interoperability between compliant IEDs and facilitates engineering with appropriate tools but also supports testing and maintenance. The complete sequence of testing from product to systems is summarized and the impact of IEC 61850 to these well-known test steps is given. The maintenance requirements of the utilities for IEC 61850 based systems are discussed and first experiences from project execution reported. The potential of IEC 61850 for testing and maintaining of Substation Automation (SA) systems are shown with some typical examples. The main result is the key role of the System Configuration Description (SCD) file. The importance of the System Integrator is shown. Since IEC 61850 is based on mainstream communication technology and any treatment needs powerful software based tools, utility maintenance staff has to possess the necessary skills and tools to exploit the potential for new maintenance strategies.

KEYWORDS

Substations, Substation Automation, IEC 61850, SCD File, Tools, Interoperability, Protection, Control, Monitoring, Distributed functions, Conformance testing, System integration, Functional testing, Maintenance tools, Testing procedures, Maintenance

tetsuji.maeda@ch.abb.com

1 Introduction

IEC 61850, the standard for communication in substations was published three years ago and is today widely used in Substation Automation projects. The goal of the standard is interoperability between devices from different manufacturers. When defining the Substation Configuration description Language (SCL) at lot of attention was paid to the engineering phase of such systems, but the standard also provides a high potential for testing and maintenance.

For substation automation, testing from device to system levels was described, analyzed and summarized in the Cigre report 236 [1] . This report was used as input for IEC 618750-10 [1] defining conformance testing, but its content covers more than what is included in the standard. Detailed conformance testing procedures are issued and test centers were qualified by UCA International Users Group - Subgroup Testing [3] . This Cigre report [1] also discusses the difference between product/device, system and project related testing.

2 From Product to Life Cycle Testing of SA Systems

Behind the life cycle of any Substation Automation System [4] are the life cycles of all integrated products. From the development and production of a device (IED) to the on-site system (project) many tests have to be passed. This **Life Cycle Testing** sequence was defined and described in the Cigre Report 236 [1] . Generally, all testing improves the quality and reduces risks both for the supplier and users. This chapter gives a short overview of the required **Testing sequence**, starting with the development of single products in R&D until a commissioned system, customized to the customer's needs and project specific requirements. The base for reliable in-house testing is the quality system of the producer and supplier according to ISO 9001/9002 as far as applicable.

The **Life Cycle Testing** sequence can be divided into two parts:

2.1 Customer project independent testing sequence handled by R&D

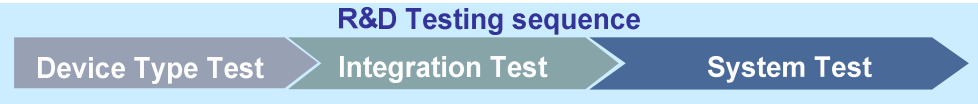

The stand-alone product (this term is used for device or IED in this paper) testing sequence starts with **Device Type Test** and ends with the **Integration Test** to confirm the proper functioning of the new product. The **Conformance Test** is the type test for standards like **IEC 61850** for communication. Successful **Type Tests** are the prerequisite to start the **Integration Test**, where the new product is tested in a small fixed test system. **Type Tests** and **Integration Tests** are performed at least by the supplier and by an independent test authority if applicable and requested. Furthermore, the device configuration tool is also tested. Normally the conformance of the IED is confirmed by a **Certificate**. In addition, **Routine Tests** or **Manufacturing Tests** in the production chain ensure a constant quality of delivered devices.

The goal of IEC 61850 is interoperability of the IEDs in Substation Automation Systems. The **System Test** should therefore also belong to the **R&D Testing sequence** and **Conformance Testing**. But both the content of IEC 61850-10 and the detailed test procedures defined by the UCA International Users Group [3] focus only on IED (single product) testing. As a result, today's **Conformance Certificates** are no guarantee for interoperability from a system perspective.

The **System Test** is testing the dynamic and interoperable interaction of the IEDs in a Substation Automation System covering as many potential configurations possible. This is especially important for the interaction of functions and for distributed functions. The performance of services including delays caused by communication equipment like switches is also verified. Whether a so-called **Integration Test** belongs to the Product Test or System Test is a matter of test granularity and definition. This test is part of the R&D Testing sequence and is project independent, thereby

substantially reducing the risks for all customer projects. As a spin-off, the system configuration tool and its interface with the product tools are also tested. The **System Test** described e.g. in [1] is not yet formally defined by IEC 61850 or by the UCA International Users Group [3] .

	Test related to	**Pre-condition**	**Executed Tests**	**Result**
Device Type Test	Product	Specification and development of new functions … … based on an existing platform … based on a new platform	- Function and Type Tests are performed continuously by the R&D of the manufacturer - The product with its functions is tested as stand-alone unit ("White box") - IEC 61850 conformance tests	Clearance for Integration Test
Integration Test	Product	Device Type tests are finalized successfully	- Tests are performed in a small, well-defined and normally fixed IEC 61850 test system - Test of IEC 61850 communication and verification of tools including application engineering and commissioning aspects - Focus on the products and its interfaces to the rest of the system ("Black box") - IED configuration tool will be tested also regarding IEC 61850 aspects like generation and exchange of SCL files	Clearance for System Test
System Test	System	Integration Tests are finalized successfully	- Tests are performed in a large evolving IEC 61850 test system - Verification of products with a clear focus on IEC 61850 system aspects - Tools and their interaction in the engineering process (exchange IEC 61850 SCL files) - Verification of the system under normal operation, avalanche and fault conditions (evaluation of IEC 61850 system performance).	Release for use in customer projects
Manu-factoring Test	Product	All tests up to System Test finalized successfully	- Dedicated Tests for hardware and software	Product available for customer projects

Table 1 - Overview on R&D Testing Sequence

2.2 *Testing of customer project specific configurations, completely handled by system supplier or system integrator in cooperation with the end-user*

The **Customer Project Testing sequence** starts with the **Factory Test**. It is a project related test to prepare the customized system for the **Factory Acceptance Test** (FAT). On site, after the installation, the **Site Tests** are carried out to prepare the system for the **Site Acceptance Test** (SAT).

The **Customer Project Testing sequence** consists of project related tests, based on the customer specification for an ordered substation automation system. They are performed by the system supplier or system integrator with the testimony of the customer. These tests confirm that the delivered individual Substation Automation System is running as specified.

	Test related to	**Pre-condition**	**Executed Tests**	**Result**
Factory Test	Customer Project	All tests up to System Test finalized successfully and products available for projects	- Configuration of the full system - Project assembled and pre-tested especially regarding project specific parts; parts not available in the factory are simulated on IEC 61850 network. - Tests performed according to the agreed test plan.	The Substation Automation System is running as specified
Factory Acceptance Test (FAT)	Customer Project	All Factory Tests are finalized successfully	- System i.e. FAT will be witnessed by the customer	Clearance for shipping, commission-ing and SAT
Site Test	Customer Project	- FAT finalized successfully - All system components are installed.	- Complete system goes into operation, fully functional including all connections e.g. to switchgear and remote systems and work places - Final adaptations if needed	The Complete Substation Automation System is running as specified
Site Acceptance Test (SAT)	Customer Project	System commissioned on-site	- Complete system i.e. SAT will be witnessed by the customer.	System handed over to the customer, incl. final SCD file!

Table 2 - Overview on Customer Project Testing Sequence

3 Maintenance requirements from Utilities

Using numerical technology and the advantages of self-supervision provided in modern IEDs, many of the described tests in the previous chapter (especially excluding R&D tests) must not be repeated as part of the periodical maintenance during the operational phase of a SA System. During the operational phase of the life cycle the focus is more on

- System fault analysis
- Periodic functional testing
- Repairs or replacement of IEDs
- Extensions

Replacement or temporary taking out of service of IEDs (e.g. for isolated testing of protection/control functions or maintenance of the switchgear itself) has to be executed in an efficient manner, minimizing disturbance to normal operation of the system as far as possible. Using IEC 61850 communication technologies for horizontal data exchange introduces new aspects and complexity for maintenance personal that can easily be underestimated. Maintenance personal is therefore dependent on the support of efficient system maintenance tools for their daily work.

Device Tools have to be provided to interrogate the IEDs at device level. The modeled data of IEDs has to be easily visible and accessible. If binary status signals are transported over a substation network according to IEC 61850, there has to be high-level i.e. data model level access provided for testing this data. Utilities should not need special expertise for using protocol analyzers. Tests are necessary during life-cycle with a simulation tool for such signals.

Over the life cycle, **Periodic testing** of the installed substation automation system (project) has to ensure constant quality. This testing is increasingly replaced by the continuous **Self-supervision** of the system, resulting in **Maintenance on demand**. Changes and extensions need an appropriate SAT-like test or some retesting of the system depending on the impact on the existing system [4] .

4 Utility experience from Project Execution

In a 61850-project it is very important that one organization has the overall responsibility as a system integrator, especially if IEDs from different vendors are used [5] . This is an important task in the project organization, having a significant impact on the project budget. Only three years after the first IEC 61850 based projects, small utilities can hardly fulfill this task. Know-how and experience has to be available and staff has to be trained first. The System Integrator must have appropriate tools, test equipment and trained staff. A factory Acceptance Test (FAT) is recommended, at least with typical IEDs as it may not be possible to test the whole system in the factory. If problems are first detected during commissioning, the situation becomes time-critical and stressful. Tedious discussions, claims, unpleasant meetings, numerous telephone calls, additional on-site manufacturer support and unexpected man-hours are the result. This can be avoided with a reasonable FAT under the lead of the system integrator. On-site, utilities want to check the correct behavior of the IEDs and the overall SA system under various application conditions.

Utilities are aware that IEC 61850 is not just plug and play but needs substantial learning experience, opening a fascinating world in protection- and substation engineering and testing.

5 Potential of 61850 for Testing and Maintenance

5.1 Usage of Substation Configuration Language (SCL)

With SCL the IEC 61850 standard has introduced an interoperable file format that is used for the exchange of configuration data between engineering tools. Based on this configuration language, several file types have been defined in the standard. The Station Configuration Description (SCD) file is one of these and can be seen as the full documentation of a complete SA System. Utilities should request one common SCD file for the complete system. Typical content of a SCD file are:

- Description of complete topology & primary equipment of the substation
- All IEDs (servers) & station level equipment (clients) including their data models
- Complete data-flow in the system
- Relationship between SA functionality and the primary equipment

From the system point of view, the interfaces for each device, client or server, connected to the system are described in this file. This type of documentation of the dataflow is only possible in a comprehensive way when using static (offline) configuration of datasets and control blocks. The IED tools can read this information out of the SCD file and download them to the IED.

The alternative method is when the datasets and control blocks are created dynamically (online) by the clients. In this case only engineering or testing tools know the data actually configured. In some cases this might ease the configuration of a SA system but leads to the loss of transparency of the overall system behavior, because the SCD file then lacks the complete dataflow configuration.

The complete SCD file is therefore the central part of the documentation and can be used for all future activities performed on the SA System e.g. maintenance, extensions and testing. Having in mind the key idea of single data entry – which also includes one system configuration tool for the overall engineering - the following examples show some selected situations, where the SCD file can be used with benefit and how it could be integrated in a common maintenance process of an IEC 61850 based SA system.

5.2 Simulation Tools

Trends in substation automation projects have shown that the most obvious and common application for using GOOSE messages is interlocking. The horizontal GOOSE service uses the publisher-subscriber communication which corresponds to the vertical server-client communication. In the situation that a specific IED that publishes data for interlocking e.g. the switch positions has failed (and must be taken out of service or disconnected from the communication bus for any other reason), the subscribers of the now missing data on the bus must be operated in an interlock-override mode. This is because the applications running on the IEDs are usually refusing operations with obsolete data not been refreshed in time by the publisher. Maintenance concepts for these situations must consider such operational aspects for the complete system as the remaining healthy part of the system shall continue working as undisturbed as possible. Similar situations can of course occur already during the testing and commissioning phase where e.g. the sequential adding of bays (including their control & protection IEDs) to an energized system should not lead to major reengineering and reloading of the configuration.

Figure 1 shows two possibilities for connecting simulation tools to the system. The starting point would be the full scope engineered SCD file with the content described earlier. The SCD file has been created and used during the engineering process of the specific SA System and is now part of the common system documentation any engineer should have available when he enters the site.

This file could be loaded into a simulation tool connected either to the bus or directly to an IED. In both cases the tool could simulate one or more user selected clients/servers based on the interface description extracted out of the SCD file. If the SCD file is missing or incomplete, then the configuration work of datasets and control blocks has to be done manually, which can be very error prone. Based on this simulation, application tests on the real system components can be performed. If the process bus or additional injection hardware is used, then closed loop testing of an IED is possible.

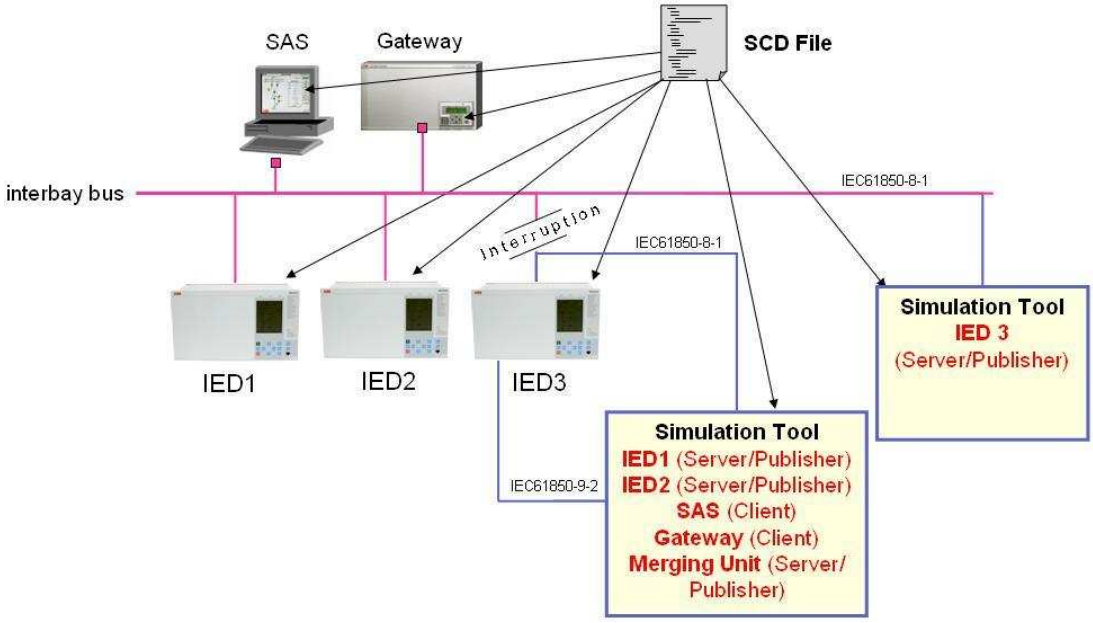

Figure 1 - Usage of Simulation Tool

Typical Features of a Simulation Tool	Usage of project specific data (SCD file) for configuration IED specific configuration can be extracted from the SCD file Consistent simulation of selected IEDs Real life simulation of communication services • Horizontal communication - repeated sending of GOOSE and cyclic sending of sampled values • Vertical communication - spontaneous sending of reports Setting of any data configured in the IEDs selected for simulation Tailored scripts for simulation of simple applications • e.g. Control applications double command blocking ➔ ***Receiving IEDs & clients cannot see any difference between simulated and real data on the bus***

Table 3 - Typical Features of a Simulation Tool

5.3 System fault analysis & periodical testing

Besides the simulation of process adaptations and updates, another very important aspect for the maintenance engineer is to get a fast overview on the health state of the SA system when he reaches the site. This can typically be the case when there is a gateway/protocol converter but no dedicated HMI on-site. The full-scope project-specific SCD file is again the basis for the diagnosis tool. With the data e.g. IEDs with names, addresses and dataflow configurations included, the engineer need not worry about error prone manual configuration of the testing and analysis tool. The focus can remain on functional diagnosis and analysis of the running applications.

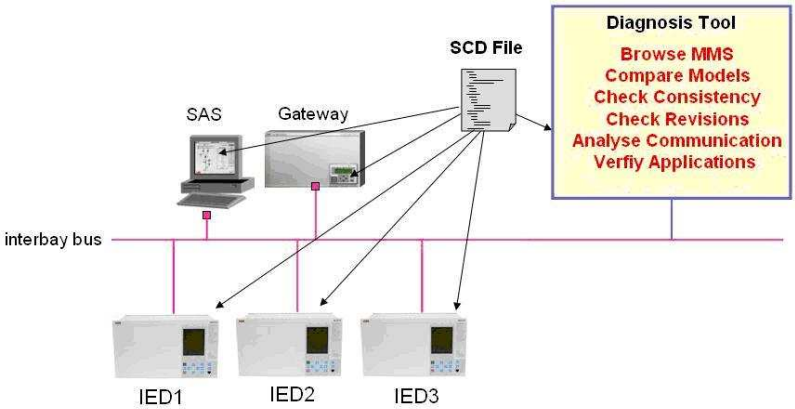

Figure 2 - Usage of Diagnosis Tools

Typical Features of a Diagnosis Tool	Usage of project specific data (SCD file) for configuration Establish online communication connection to the IEDs using either static or dynamic configured data sets and control blocks for reports Visualize the health state of the running system Check data consistency and configuration revisions against SCD file Analyze & Verify running applications Decode Ethernet traffic to SA Domain language based on SCD file Show functional (system oriented) or product oriented addressing of logged data

Table 4 - Typical Features of a Diagnosis Tool

5.4 Replacement of IEDs in a running system

IEC 61850 does not provide a definition for the interchangeability of IEDs from different vendors. Experience has shown that the replacement of an IED by a functional equivalent IED from the same or another manufacturer may have a considerable impact on the replacement process, since differences in the internal structure and naming convention - as far as allowed by the standard - are very common. These names are used during system and communication engineering, and sometimes even for the online establishment of master-client associations. Therefore, changes of names at the data source (by the new IED) might require re-engineering of all IEDs receiving data from it. Also the fact that not all IEDs have implemented all logical node classes may lead to the situation that some have to be substituted by generic logical nodes like GGIO or GAPC when replacing one IED type by another.

In former master-slave architectures where all data flowed vertically from the bay level IEDs to one central master, only the IED to be replaced and this master were concerned. In IEC 61850 based systems however, several clients might be connected to the same server. The horizontal communication services between IEDs i.e. GOOSE and Sampled Values services allow new substation functionalities or existing functionalities with both reduced engineering effort and higher reliability. However, these services introduce multiple sinks for signals which may all be affected by changes at the signal source.

To minimize the impact of maintenance activities at application level, IEC 61850 introduces function oriented data identification according to the concepts of IEC 61346 in addition to the IED related data identification. Advanced system engineering tools will offer application wizards which simplify the discussed IED exchange taking the above-mentioned constraints into account. Edition 2 of IEC 61850 currently being defined will introduce features providing the basis for such tools.

In general the exchange of IEDs in a running system has an impact on the other system components and usually needs actions involving both the IED and system configuration tools. A comprehensive article on designing IEC 61850 systems for maintenance, retrofit and extension can be found in [5] .

6 Conclusions

The key feature of IEC 61850 is its strong formal description of the substation automation system and the relationship of its functions to the single line diagram representing the primary equipment provided by SCL. The System Configuration Description (SCD) file being created in the engineering phase and describing the implemented system in a comprehensive way provides a very high potential both for testing and maintenance of the system over its complete life-cycle. It is the common data base for all testing and maintenance tools.

The long testing sequence from product to system keeping the quality high and interoperability problems low starts with devices compliant to IEC 61850 including IEC 61850 conformance and system tests. Since there is no plug and play, the responsibility for the realization of the complete ordered system (project) with all components has to be taken by the system integrator. The maintenance over the life-cycle is the responsibility of the user (utility) with or without support by the manufacturer and system integrator.

It is necessary for utilities to invest in IEC 61850 know-how and its communication technology, also in additional skills and tools needed by the maintenance staff. In general, anyone working at some phase of the system life-cycle will always need relevant tools.

BIBLIOGRAPHY

[1] Conformance testing guideline for communication in substations – Cigre Report 236 (produced by SC B5 WG B5.01) 2003

[2] IEC 618750-10 Communication networks and systems in substations – Part 10: Conformance testing

[3] UCA International Users Group - http://www.ucainternational.org

[4] K.P.Brand, V. Lohmann, W.Wimmer, Substation Automation Handbook, ISBN 3-85759-951-5, 2003, http://www.uac.ch

[5] The introduction of IEC 61850 and its impact on protection and automation within substations – Cigre Report 326 (produced by SC B5 WG B5.11) 2007

[6] W.Wimmer, Designing IEC 61850 systems for maintenance, retrofit and extension, , article to be published PACWorld Magazine, Issue Spring 2008