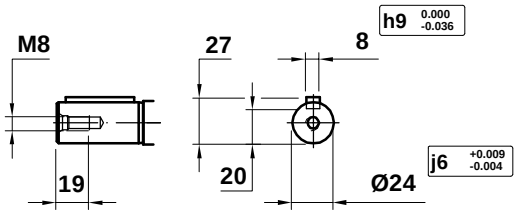

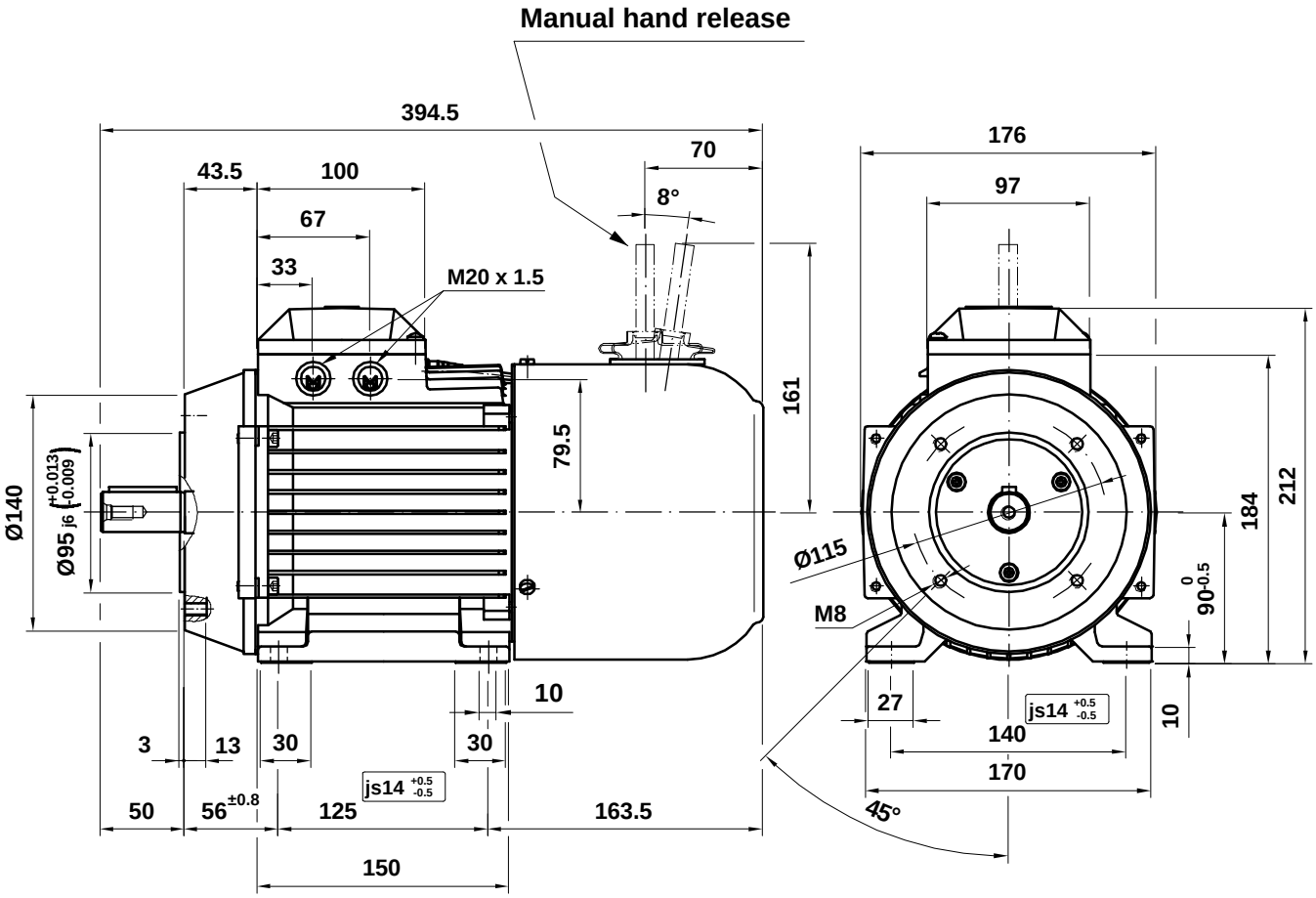

M3ARF/S 090 L

Motor Dimension Print	Motor Type : M3ARF/S 090 L	Document Nº : A1.3200

Description :
Brake motor foot and flange mounted IM2101

Unit : División Motores, Spain	Issued by : IKA/G.Blanes	Replaces :	
Date : 2002-01-03	Approved by : IKA/E.Sáenz	Replaced by :	

ABB Automation Products, S.A.

Customer Reference :

ABB