Installation and commissioning manual

REO 517*2.4

Multi-functional terminals for railway application

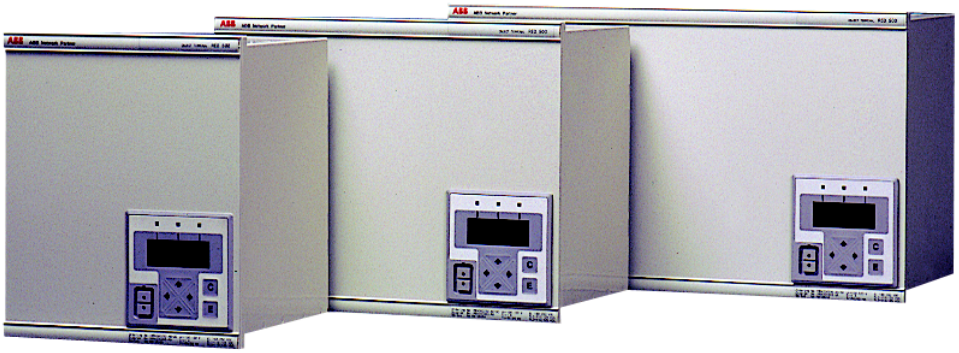

About this manual

Document No: 1MRK 506 133-UEN
Issued: October 2002
Revision: -

Manufacturer:

ABB Automation Technology Products AB
Control & Force Measurement
Substation Automation
SE-721 59 Västerås
Sweden
Telephone: +46 (0) 21 34 20 00
Facsimile: +46 (0) 21 14 69 18
Internet: www.abb.com/substationautomation

Contents

Contents

Contents

Contents

Contents

Chapter 1 Introduction

About this chapter

This chapter introduces the user to the manual as such.

1 Introduction to the installation and commissioning manual

1.1 About the complete set of manuals for a terminal

The complete package of manuals to a terminal is named users manual (UM). The *Users manual* consists of four different manuals:

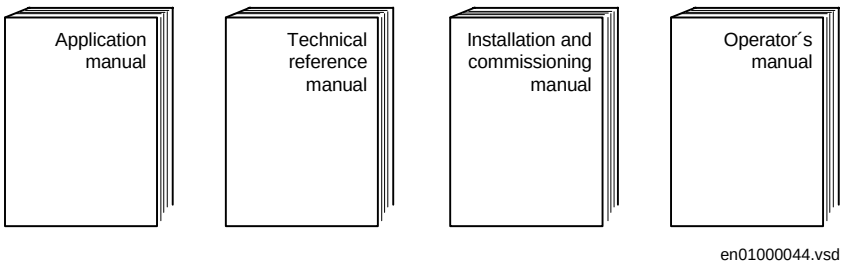

The Application Manual (AM) contains descriptions, such as application and functionality descriptions as well as setting calculation examples sorted per function. The application manual should be used when designing and engineering the protection terminal to find out when and for what a typical protection function could be used. The manual should also be used when calculating settings and creating configurations.

The Technical Reference Manual (TRM) contains technical descriptions, such as function blocks, logic diagrams, input and output signals, setting parameter tables and technical data sorted per function. The technical reference manual should be used as a technical reference during the engineering phase, installation and commissioning phase and during the normal service phase.

The Operator´s Manual (OM) contains instructions on how to operate the protection terminal during normal service (after commissioning and before periodic maintenance tests). The operator´s manual could be used to find out how to handle disturbances or how to view calculated and measured network data in order to determine the reason of a fault.

The Installation and Commissioning Manual (ICM) contains instructions on how to install and commission the protection terminal. The manual can also be used as a reference if a periodic test is performed. The manual covers procedures for mechanical and electrical installation, energising and checking of external circuitry, setting and configuration as well as verifying settings and performing a directionality test. The chapters and sections are organised in the chronological order (indicated by chapter/section numbers) the protection terminal should be installed and commissioned.

1.2 About the installation and commissioning manual

The installation and commissioning manual contains the following chapters:

- The chapter *"Safety information"* presents warning and note signs, which the user should pay attention to.
- The chapter *"Overview"* gives an overview over the major tasks when installing and commissioning the terminal.
- The chapter *"Unpacking and checking the terminal"* contains instructions on how to receive the terminal.
- The chapter *"Installing the terminal"* contains instructions on how to install the terminal.
- The chapter *"Checking the external circuitry"* contains instructions on how to check that the terminal is properly connected to the protection system.
- The chapter *"Energising the terminal"* contains instructions on how to start-up the terminal.
- The chapter *"Configuring the digital communication modules"* contains instructions on how to configure the communication modules such as modems, optical converters etc if included in the terminal.
- The chapter *"Setting and configuring the terminal"* contains instructions on how to download settings and configuration to the terminal.
- The chapter *"Establishing connection and verifying the SPA/IEC-communication"* contains instructions on how to enter SPA/IEC settings and verifying the SPA/IEC communication.
- The chapter *"Verifying settings by secondary injection"* contains instructions on how to verify that each included function operates correctly according to the set values.
- The chapter *"Verifying the internal configuration"* contains instructions on how verify that the terminal is properly configured.
- The chapter *"Testing the protection system"* contains instructions on how to test that the terminal is in contact with the primary system.
- The chapter *"Checking the directionality"* contains instructions on how to test directional dependent functions, if included in the terminal.

1.3 Intended audience

1.3.1 General

The installation and commissioning manual is addressing the installation, commissioning and maintenance personnel responsible for taking the protection into normal service and out of service.

1.3.2 Requirements

The installation personnel must have a basic knowledge in handling electronic equipment. The commissioning and maintenance personnel must be well experienced in using protection equipment, test equipment, protection functions and the configured functional logics in the protection.

1.4 Related documents

Documents related to REO 517*2.4	Identity number
Operator's manual	1MRK 506 134-UEN
Installation and commissioning manual	1MRK 506 133-UEN
Technical reference manual	1MRK 506 131-UEN
Application manual	1MRK 506 132-UEN
Technical overview brochure	1MRK 506 135-BEN

1.5 Revision notes

Revision	Description
2.4-00	First revision

1.6 Acronyms and abbreviations

CAN	Controller Area Network. ISO standard (ISO 11898) for serial communication.
CCITT	Consultative Committee for International Telegraph and Telephony. A United Nations sponsored standards body within the International Telecommunications Union.
CMPPS	Combined Mega Pulses Per Second.
Co-directional	Way of transmitting G.703 over a balanced line. Involves two twisted pairs making it possible to transmit information in both directions.
CompactPCI	An adaption of the Peripheral Component Interconnect (PCI) specification for industrial and/or embedded applications requiring a more robust mechanical form factor than desktop PCI.

Contra-directional	Way of transmitting G.703 over a balanced line. Involves four twisted pairs of with two are used for transmitting data in both directions, and two pairs for transmitting clock signals.
FOX 20	Modular 20 channel telecommunication system for speech, data and protection signals.
FOX 6Plus	Compact, time-division multiplexer for the transmission of up to seven duplex channels of digital data over optical fibers.
G.703	Electrical and functional description for digital lines used by local telephone companies. Can be transported over balanced and unbalanced lines.
G.711	Standard for pulse code modulation of analog signals on digital lines.
GIS	Gas Insulated Switchgear.
IEC 870-5-103	A serial master/slave protocol for point-to-point communication.
IEEE 802.12	A network technology standard that provides 100 Mbits/s on twisted-pair or optical fiber cable.
IEEE P1386.1	PCI Mezzanine Card (PMC) standard for local bus modules. References the CMC (IEEE P1386, also known as Common Mezzanine Card) standard for the mechanics and the PCI specifications from the PCI SIG (Special Interest Group) for the electrical.
I-GIS	Intelligent Gas Insulated Switchgear.
LAN	Local Area Network.
LCD	Liquid Chrystal Display
LED	Light Emitting Diode
LON	Local Operating Network.
MVB	Multifunction Vehicle Bus. Standardized serial bus originally developed for use in trains.
PISA	Process Interface for Sensors & Actuators.
Process bus	Bus or LAN used at the process level, that is, in near proximity to the measured and/or controlled components.
RISC	Reduced Instruction Set Computer.
RS422	A balanced serial interface for the transmission of digital data in point-to-point connections.
RS530	A generic connector specification that can be used to support RS422, V.35 and X.21 and others.
SA	Substation Automation.

SPA	Strömberg Protection Acquisition, a serial master/slave protocol for point-to-point communication.
U/I-PISA	Process interface components that delivers measured voltage and current values.
UTC	Coordinated Universal Time. A coordinated time scale, maintained by the Bureau International des Poids et Mesures (BIPM), which forms the basis of a coordinated dissemination of standard frequencies and time signals.
V.36	Same as RS449. A generic connector specification that can be used to support RS422 and others.
X.21	A digital signalling interface primarily used for telecom equipment.

Chapter 2 Safety information

About this chapter

This chapter contains safety information. Warning signs are presented which attend the user to be careful during certain operations in order to avoid human injuries or damage to equipment

1 Warning signs

Warning!

Strictly follow the company and country safety regulations. Working in a high voltage environment requires serious approach to avoid human injuries and damage to equipment.

Warning!

Do not touch circuitry during operation. Potentially lethal voltages and currents are present.

Warning!

Always avoid to touch the circuitry when the cover is removed. The product contains electronic circuitries which can be damaged if exposed to static electricity (ESD). The electronic circuitries also contain high voltage which is lethal to humans.

Warning!

Always use suitable isolated test pins when measuring signals in open circuitry. Potentially lethal voltages and currents are present.

Prohibition!

Never connect or disconnect a wire and/or a connector to or from a terminal during normal operation. Hazardous voltages and currents are present that may be lethal. Operation may be disrupted and terminal and measuring circuitry may be damaged.

Warning!

Always connect the terminal to protective ground, regardless of the operating conditions. This also applies to special occasions such as bench testing, demonstrations and off-site configuration. Operating the terminal without proper earthing may damage both terminal and measuring circuitry and may cause injuries in case of an accident.

Warning!

Never disconnect a secondary connection of current transformer circuit without short-circuiting the transformer's secondary winding. Operating a current transformer with the secondary winding open will cause a massive potential build-up that may damage the transformer and may cause injuries to humans.

Warning!

Never remove any screw from a powered terminal or from a terminal connected to powered circuitry. Potentially lethal voltages and currents are present.

2 Caution signs

Caution!

Always transport modules using certified conductive bags. Always handle modules using a conductive wrist strap connected to protective ground and on a suitable antistatic surface. Electrostatic discharge (ESD) may cause damage to the module.

Caution!

Do not connect live wires to the terminal. Internal circuitry may be damaged

Caution!

Always use a conductive wrist strap connected to protective ground when replacing modules. Electrostatic discharge (ESD) may damage the module and terminal circuitry.

Caution!

Take care to avoid electrical shock if accessing wiring and connection terminals when installing and commissioning.

Caution!

Changing the active setting group will inevitably change the terminal's operation. Be careful and check regulations before making the change.

3 Note signs

Note!

The protection assembly is designed for a maximum continuous current of four times rated value.

Note!

Activating the setting lockout function, which prevents unauthorised changes of the settings, without proper configuration may seriously affect the terminal's operation.

Chapter 3 Overview

About this chapter

This chapter introduces the user to the installation and commissioning tasks.

1 Commissioning and installation overview

The settings for each function must be calculated before the commissioning task can start. A configuration, made in the configuration and programming tool, must also be available if the terminal does not have a factory configuration downloaded.

The terminal is unpacked and visually checked. It is preferably mounted in a cubicle or on a wall. The connection to the protection system has to be checked in order to verify that the installation was successful.

The installation and commissioning task starts with configuring the digital communication modules, if included. The terminal can then be configured and set, which means that settings and a configuration has to be applied if the terminal does not have a factory configuration downloaded. Then the operation of each included function according to applied settings has to be verified by secondary injection. A complete check of the configuration can then be made. A conformity test of the secondary system has also to be done. When the primary system has been energised a directionality check should be made.

Chapter 4 Unpacking and checking the terminal

About this chapter

This chapter contains instructions on how to receive the terminal.

1 Receiving, unpacking and checking

Procedure

1. **Remove the transport casing.**
2. **Visually inspect the terminal.**
3. **Check that all items are included in accordance with the delivery documents.**

   The user is requested to check that all software functions are included according to the delivery documents after the terminal has been energised.

4. **Check for transport damages.**

   In case of transport damage appropriate action must be taken against the latest carrier and the nearest ABB office or representative should be informed. ABB should be notified immediately if there are any discrepancies in relation to the delivery documents.

   Store the terminal in the original transport casing in a dry and dust free place, if the terminal is not to be installed or commissioned immediately. Observe the environmental requirements stated in the technical data.

Chapter 5 Installing the terminal

About this chapter

This chapter describes how to install the terminal.

1 Overview

The mechanical and electrical environmental conditions at the installation site must be within permissible range according to the technical data of the terminal. Dusty, damp places, places liable to rapid temperature variations, powerful vibrations and shocks, surge voltages of high amplitude and fast rise time, strong induced magnetic fields or similar extreme conditions should be avoided.

Sufficient space must be available in front of and at rear of the terminal to allow access for maintenance and future modifications. Flush mounted terminals should be mounted so that terminal modules can be added and replaced without excessive demounting.

2 Mounting the terminal

Most of the REx 5xx terminals can be rack, flush, semi-flush or wall mounted with the use of different mounting kits. An additional box of type RHGS can be mounted to one side of a 1/2 or 3/4 terminal. The 1/1 of 19-inches wide terminal can not be semi-flush mounted due to that the mounting angles will cover the ventilating openings at the top and bottom parts.

A suitable mounting kit must be available. Mounting kits contain all parts needed including screws and assembly instructions. The following mounting kits are available:

- 19-inch rack mounting kits, 1/2, 3/4 and 1/1 terminal width variants. See section 2.1 "Mounting in a 19-inch rack".
- Side-by-side mounting kit. See section 2.2 "Mounting in a 19-inch rack with an additional box type RHGS".
- Flush mounting kit. See section 2.3 "Mounting in a flush or semi-flush installation".
- Semi-flush mounting kit. See section 2.3 "Mounting in a flush or semi-flush installation".
- Wall mounting kit. See section 2.4 "Mounting on a wall".

2.1 Mounting in a 19-inch rack

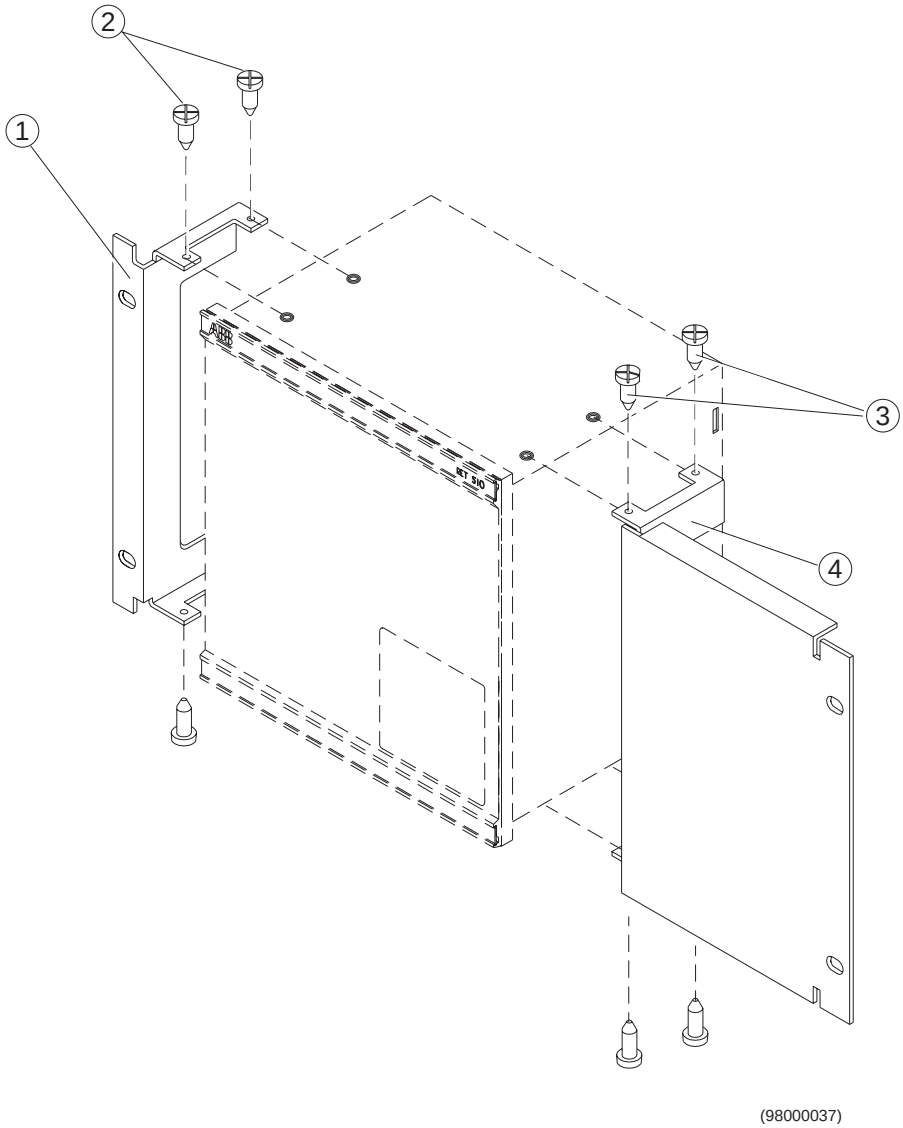

PosNo	Description
1 and 4	Mounting angle
2 and 3	TORX T20 screws

Figure 1: 19-inch rack mounting

Procedure

1. **Carefully fasten the mounting angles to the sides of the terminal.**

   Use the TORX T20 screws available in the mounting kit.

2. **Place the terminal assembly in the rack.**
3. **Fasten the mounting angles with appropriate screws.**

2.2 Mounting in a 19-inch rack with an additional box type RHGS

Make sure a side-by-side mounting kit and a suitable 19-inch rack mounting kit are available before proceeding.

Assemble the two terminals by using a side-by-side mounting kit. Then mount the brackets and install the assembled terminals in the rack as described in section 2.1 "Mounting in a 19-inch rack".

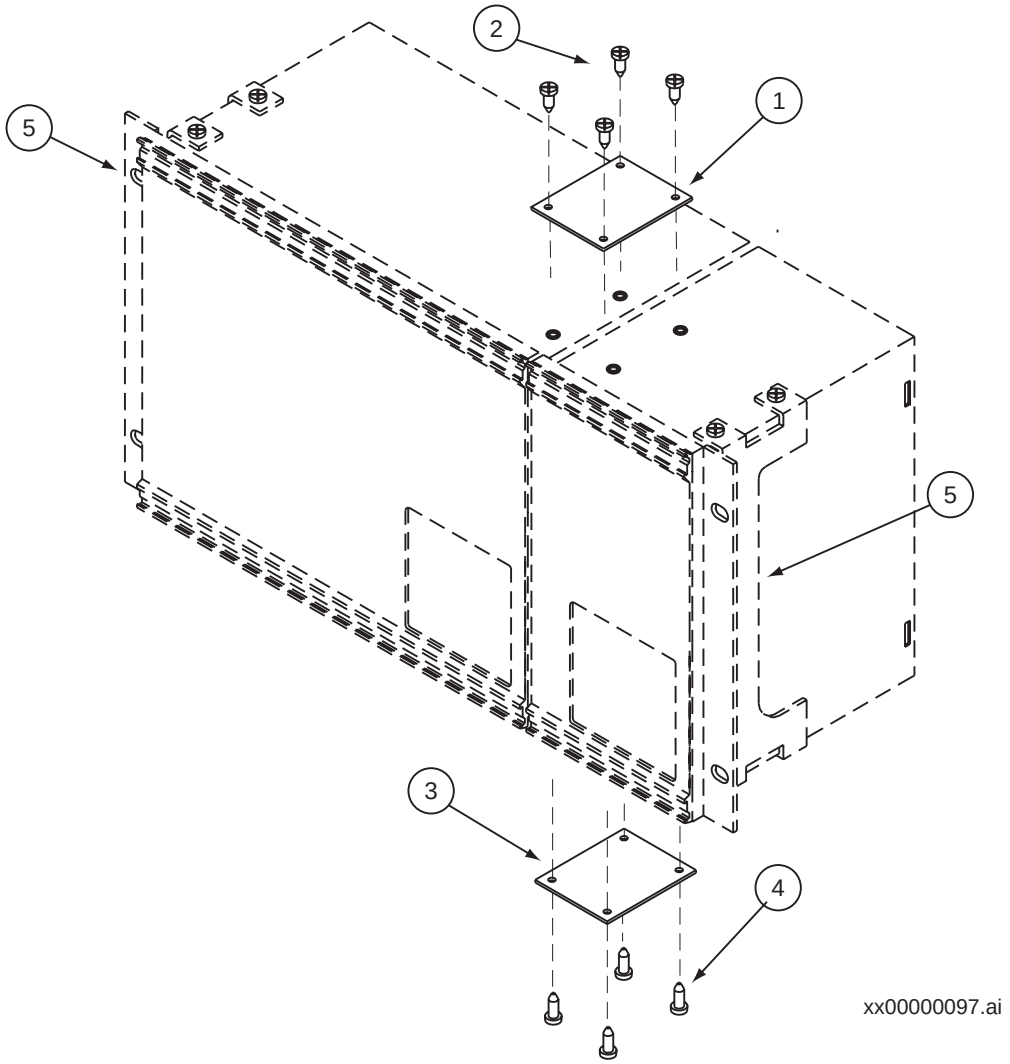

PosNo	Description
1 and 3	Side-by-side mounting plate
2 and 4	Screws (TORX T20)
5	Mounting angle

Figure 2: Side-by-side assembly

Procedure

1. **Place the two terminals next to each other on a flat surface.**
2. **Fasten a side-by-side mounting plate (PosNo 1).**

   Use four of the delivered screws.

3. **Carefully turn the two terminals up-side down.**
4. **Fasten the second side-by-side mounting plate.**

   Use the remaining four screws.

5. **Follow the instructions in section 2.1 "Mounting in a 19-inch rack" to mount the mounting angles (PosNo 5) and install the side-by-side assembly in the rack.**

2.3 Mounting in a flush or semi-flush installation

Make sure a flush or semi-flush mounting kit is available before proceeding.

The procedure for flush and semi-flush mounting is mainly the same. In semi-flush mounts a distance frame is added. The delivered mounting seal is only necessary to fulfil IP 54.

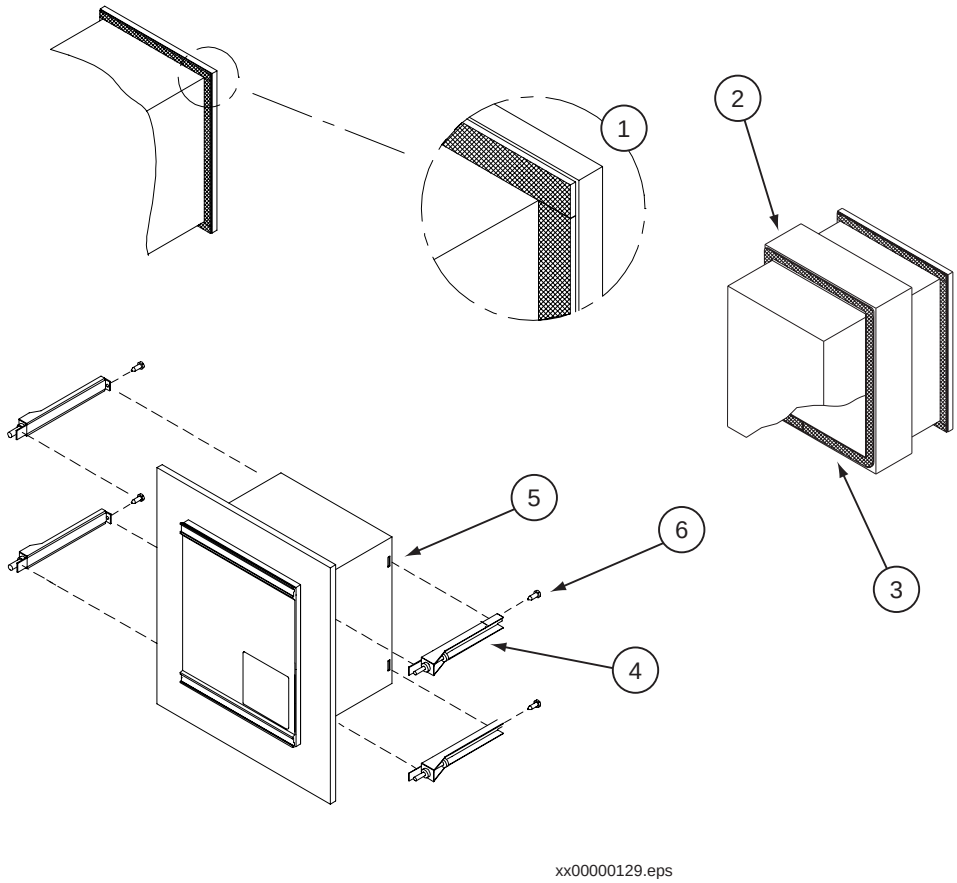

PosNo	Description
1	Sealing strip
2	Distance frame (only for semi-flush)
3	Sealing strip for distance frame (only for semi-flush)
4	Side holder
5	Groove
6	Locking screw (TORX T10)

Figure 3: Flush and semi-flash mounting

Note!

Flush or semi-flush mount cannot be used for side-by-side mounted terminals when IP 54 must be fulfilled.

Procedure

1. **Cut the sealing strip in appropriate lengths.**

   The strip is delivered with the mounting kit. In the semi-flush mounting kit two strips are delivered, one for the terminal and one self-adhering for the distance frame. The length of the strip is enough for the largest available terminal.

   Cut the strip into four, one part for each side of the terminal. When cutting, make sure no gaps will be present between each part. Preferably, seal the joints at the corners (posNo 1).

   Repeat the procedure for the self-adhering strip which are to be adhered to the distance frame.

2. **Dispose the strip remains.**

   The remains should be source separated as soft plastic.

3. **Carefully press the cut strips into the front panel groove.**
4. **Adhere the cut strips (posNo 3) to the edge of the distance frame (posNo 2).**

   semi-flush mounting only.

5. **Make a panel cut-out.**

   See the Technical reference manual for cut-out dimensions.

6. **Insert the terminal into the cut-out.**
7. **Add and lock the side holders (PosNo 4) to the terminal.**

   Thread a side holder into the groove (posNo 5) at the back end of the terminal. Insert and lightly fasten the locking screw (posNo 6). Next, thread a side holder on the other side of the terminal, and lightly fasten its locking screw.

   Repeat this with the remaining two side holders.

8. **Lock the terminal to the cut-out.**

   Firmly tighten the locking screws. It is important that all four side holder locking screws are tightened the same in order to maintain a good and even seal in IP 54 environments.

2.4 Mounting on a wall

The mounting bars are prepared for adding DIN-rails or equivalent above and below the mounted terminal. If used, make sure all necessary parts such as rails and terminal blocks are available before starting. Make sure the wall mounting kit is available.

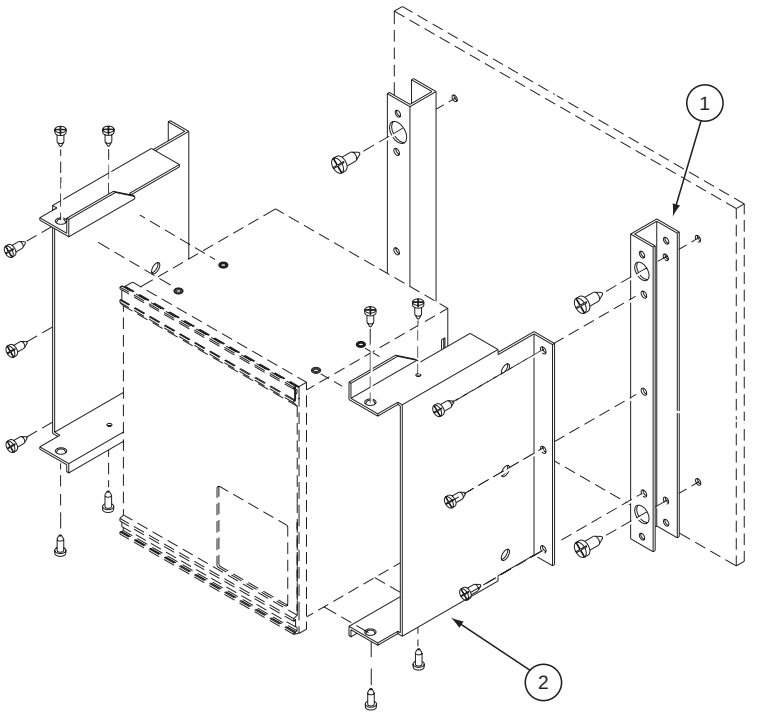

xx00000130.eps

PosNo	Description
1	Mounting bar
2	Side plate

Figure 4: Wall mounting

2.4.1 Mounting the terminal on a wall

Procedure

1. **Mount the bars (posNo 1) onto the wall.**

   See the Technical reference manual for measurements.

   Depending on the wall different preparations may be needed, like drilling and inserting plastic or expander plugs (concrete/plaster-board walls) or threading (metal sheet wall).

2. **Mount the DIN-rail(s) on the mounting bars.**
3. **Mount the terminal blocks on the DIN-rail(s).**

   It is much easier to do this without the unit in place.

4. **Make all external electrical connections to the terminal blocks.**

   It is much easier to do this without the unit in place.

5. **Mount the side plates (posNo 2) to the terminal.**
6. **Mount the terminal to the mounting bars.**

2.4.2 Preparing a wall mounted terminal for electrical installation

Procedure

1. **Remove all screws from one side plate.**
2. **Remove two screws from the other side plate.**
3. **Careful swing the terminal out from the wall.**

   See figure 5.

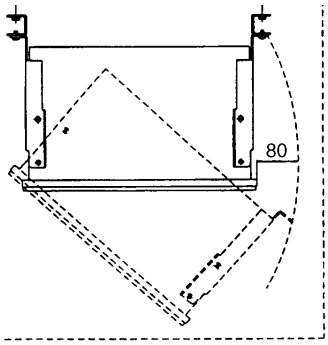

xx99000287

Figure 5: View from above over a wall mounted terminal that is prepared for electrical connection.

3 Making the electrical connections

Always make sure established guidelines for this type of terminal is followed during installation. When necessary use screened twisted-pair cables to minimize susceptibility. Otherwise use any kind of regular nonscreened tinned cable or equivalent.

When using screened cabling always use 360° full screen cable bushings to ensure screen coupling. Ensure that all signals of a single circuit are in the same single cable. Avoid mixing current and voltage measuring signals in the same cable. Also use separate cables for control and measuring circuits.

Note!

Screened and twisted pair cables are a requirement for galvanic communications in application with 56/64 kbit/s. The screen must be earthed at both sides of a cable.

3.1 Connecting the CT circuits

CTs are connected using back-side mounted screw connectors.

Use a solid conductor with a cross section area between 2.5-6 mm^2 (AWG14-10) or a stranded conductor with a cross section area between 2.5-4 mm^2.

If the terminal is equipped with a test-switch of type RTXP 24 Combiflex wires with 20 A sockets must be used to connect the CT circuits.

3.2 Connecting the auxiliary power, VT and signal connectors

Auxiliary power, VTs and signals are connected using COMBICON (Phoenix technology) plug-in screw connectors.

Procedure

1. **Connect signals to the COMBICON plug.**
2. **Plug the connector to the corresponding back-side mounted receptable.**
3. **Lock the plug to the receptable by fastening the lock screws.**

   Use a solid or stranded conductor with a cross section area between 0.5-2.5 mm^2 (AWG20-14). Use a ferrule with plastic collar to connect two conductors, cross section area between 0.5-1.5 mm^2 (AWG20-16).

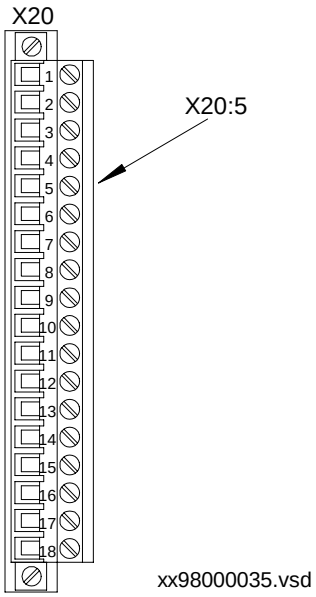

Figure 6: Voltage connector, example showing connection point X20:5

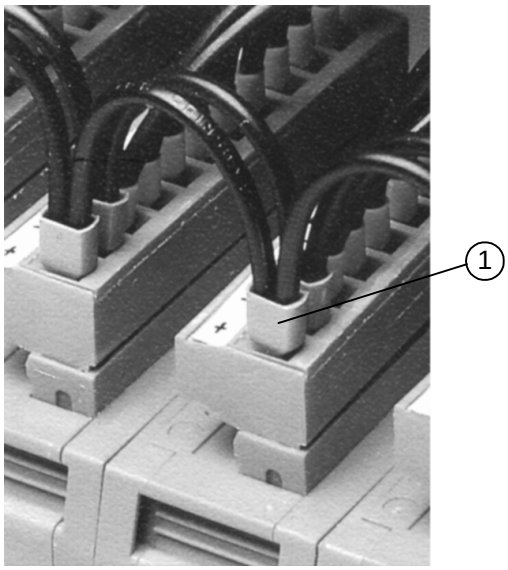

Where:

1 is ferrules

Figure 7: Connected cables with ferrules

If the terminal is equipped with a test-switch of type RTXP 24 Combiflex wires with 20 A sockets must be used to connect the VT circuits and the auxiliary power.

3.3 Connecting to protective ground

Connect the unit to the grounding bar of the cubicle with a green/yellow conductor, cross section at least 1.5 mm^2 (AWG16), connected to the protective ground connector at the back of the terminal.

3.4 Making the screen connection

When using screened cables always make sure screens are grounded and connected in according to applicable engineering methods. This may include checking for appropriate grounding points near the terminal, for instance, in the cubicle and/or near the source of measuring. Ensure that ground connections are made with short (max. 10 cm) conductors of an adequate cross section, at least 6 mm^2 (AWG10) for single screen connections.

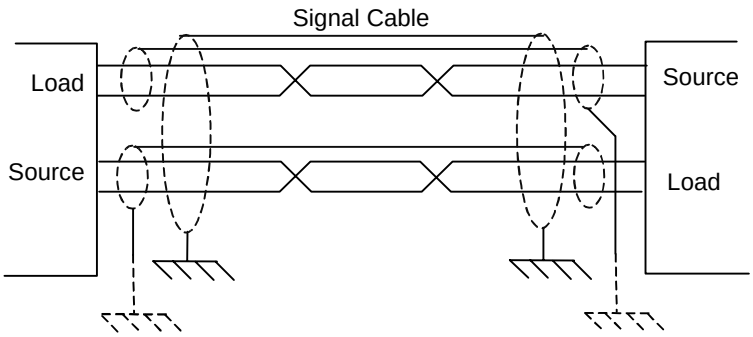

en01000189.vsd

4 Installing the optical fibres

Connectors are generally color coded; connect blue or dark grey cable connectors to blue or dark grey (receive) back-side connectors. Connect black or grey cable connectors to black or grey (transmit) back-side connectors.

Fibre optical cables are sensitive to handling. Do not bend too sharply. The minimum curvature radius is 15 cm for plastic fibres and 25 cm for glass fibres. If cable straps are used, apply with loose fit.

Caution!

Always hold the connector, never the cable, when connecting or disconnecting optical fibres. Do not twist, pull or bend the fibre. Invisible damage may increase fibre attenuation thus making communication impossible.

5 Installing the communication cables

When using galvanic connection between protection terminal and communication equipment or point to point galvanic connection between two protection terminals it is essential that the cable installation is carefully done. This is true regardless of type of module used, G.703, V.36, short range galvanic etc., only the possible length of the cable differs. The factors that must be taken into account are the susceptibility for noise disturbance, due to that the levels of the communication signal are very low.

For best result a cable with twisted pairs and double screens should be used, one screen for each twisted pair and one surrounding all pairs. Each signal shall utilizie its own twisted pair as in figure 8. The screen for each separate pair shall be connected to internal screen or ground connection of equipment, if available, or in other case connected to earth close to the equipment at the *sending* end for the signal. At *receiving* end the screen shall be left floating, that is, not connected to earth.

The outer screen surrounding all pairs shall be connected to a solid earth at *each* end close to the equipment.

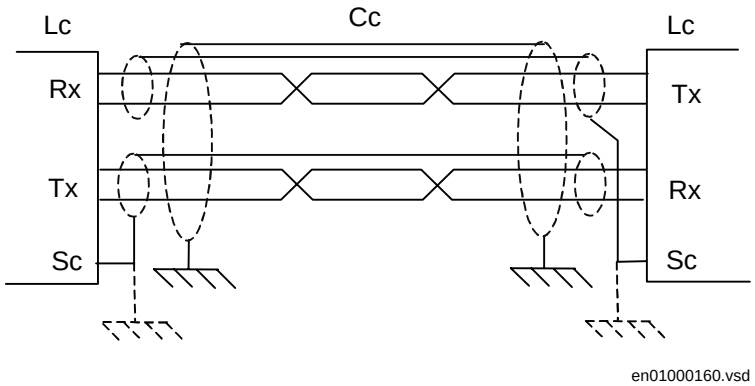

Cc	Communication cable
Lc	Line connector
Rx	Receive input
Sc	Screen (or earth/ground) connection
Tx	Transmit output

Figure 8: Communication cable installation

Note also that recommendation about cable lengths given for modules according ITU/EIA interface, not short range galvanic module, are under the assumption that the two equipment, protection terminal and communication, are within the same building and that the earthing system of the building is well carried out. It also presumes that the environment is relatively free from electromagnetic noise.

Chapter 6 Checking the external circuitry

About this chapter

This chapter describes what to check and which checks that should be made to ensure a correct connection to the external circuitry, such as auxiliary power supply, CT's and VT's. These checks must be made with the protection terminal de-energised.

1 Overview

The user must check the installation which includes verifying that the terminal is connected to the other parts of the protection system. This is done with the terminal and all connected circuits de-energised.

2 Checking the CT and VT circuits

Check that the wiring is in strict accordance with the supplied wiring diagram.

Note!

Do not continue further until any errors are corrected.

Test the circuitry. The following tests are recommended:

- Polarity check.
- CT circuit current measurement (primary injection test).
- Earthing check.

The polarity check verifies the integrity of the circuits and the phase relationship. The check should be performed as close as possible to the terminal.

The primary injection test verifies the CT ratio and the wiring all the way through from the primary system to the terminal. Injection must be performed for each phase-to-neutral circuit and each phase-to-phase pair. In each case currents in all phases and the neutral line are measured.

3 Checking the power supply

Check that the value of the auxiliary supply voltage remains within the permissible range under all operating conditions. Check that the polarity is correct.

4 Checking the binary I/O circuits

4.1 Binary input circuits

Preferably, disconnect the binary input connector from the binary input cards. Check all connected signals so that both input level and polarity are in accordance with the terminal's specifications.

4.2 Binary output circuits

Preferably, disconnect the binary output connector from the binary output cards. Check all connected signals so that both load and polarity are in accordance with the terminal's specifications.

Chapter 7 Energising the terminal

About this chapter

This chapter describes the start up sequence and what to check after the terminal has been energised.

1 Overview

Before the procedures in this chapter can be carried out the connection to external circuitry must have been checked which ensures that the installation was made correctly.

The user must energise the power supply to the terminal to start it up. This could be done in number of ways, from energising a whole cubicle to energising a single terminal. The user should reconfigure the terminal to activate the hardware modules in order to enable the self supervision function detect eventual hardware errors. Then the terminal time must be set. The self supervision function should also be checked to verify that the terminal unit operates properly. The user could also check the software version, the terminals serial number and the installed modules and their ordering number to ensure that the terminal is according to delivery and ordering specifications.

2 Energising the terminal

When the terminal is energised the window on the local HMI remains dark. After 10 seconds the green LED starts flashing and after approximately 30 seconds the window lights up. After another 10 seconds the window displays ‘Terminal Startup’ and after about 30 seconds the main menu is displayed. The upper row should indicate ‘Ready’. A steady green light indicates a successful startup.

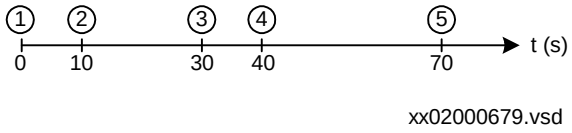

1 Terminal energised. Liquide Crystal Display (LCD) is dark.

2 Green Light Emitting Diod (LED) starts flashing

3 LCD lights up

4 "Terminal startup" is displayed

5 The main menu is displayed. A steady green light indicates a successful startup.

Figure 9: Typical terminal startup sequence

If the upper row in the window indicates ‘Fail’ instead of ‘Ready’ and the green LED is flashing an internal failure in the terminal has been detected. See the self supervision function in this chapter to investigate the fault.

After startup the appearance of the local HMI should be as shown in figure 10.

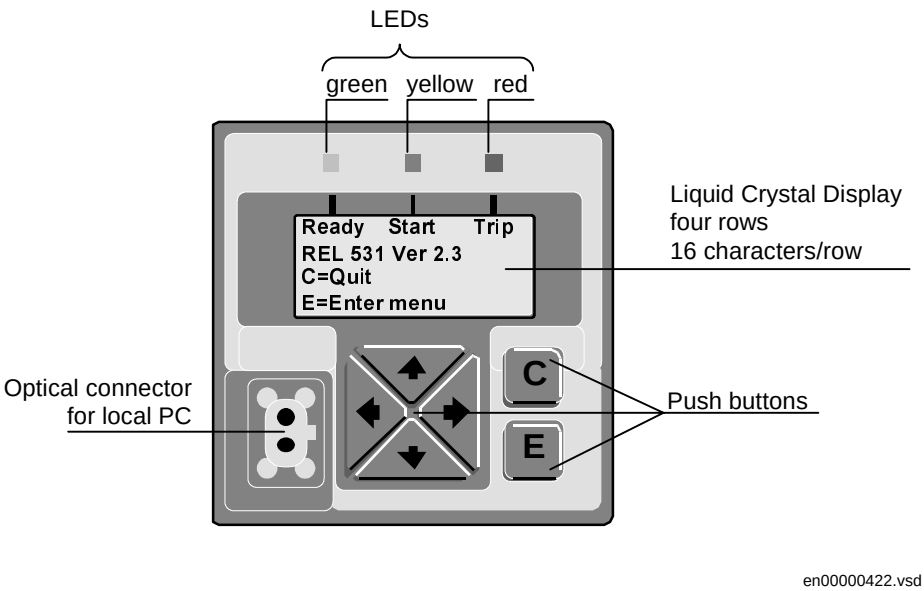

Figure 10: Example of the local HMI for, in this example, REL 531.

3 Checking the self supervision signals

3.1 Reconfiguring the terminal

I/O modules configured as logical I/O modules (BIM, BOM, IOM, DCM, IOPSM or MIM) are supervised. Not configured I/O modules are not supervised.

Each logical I/O module has an error flag that is set if anything is wrong with any signal or the whole module. The error flag is also set when there is no physical I/O module of the correct type present in the connected slot.

Procedure

1. **Browse to the 'Reconfigure' menu.**

   The Reconfigure menu is located in the local HMI under:

   Configuration/I/O-modules/Reconfigure

2. **Select 'Yes' and press 'E'.**

3.2 Setting the terminal time

This procedure describes how to set the terminal time.

1. **Display the set time dialog.**

   Navigate the menus to:

   Settings/Time

   Press the *E* button to enter the dialog.

2. **Set the date and time.**

   Use the *Left* and *Right* arrow buttons to move between the time and date values (year, month, day, hours, minutes and seconds). Use the *Up* and *Down* arrow buttons to change the value.

3. **Confirm the setting.**

   Press the *E* button to set the calendar and clock to the new values.

3.3 Checking the self supervision function

3.3.1 Navigating the menus

This procedure describes how to navigate the menus in order to find the reason of an internal failure when indicated by the flashing green LED of the HMI module.

Procedure

1. **Display the self supervision menu.**

   Navigate the menus to:

   TerminalReport
   SelfSuperv

2. **Scroll the supervision values to identify the reason of the failure.**

   Use the *Left* and/or *Right* arrow buttons to scroll between values.

3.4 Self supervision HMI data

Table 1: Output signals for the self supervision function

Indicated result	Possible reason	Proposed action
InternFail = OK	No problem detected.	None.
InternFail = Fail	A failure has occurred.	Check the rest of the indicated results to find the fault.
InternWarning = OK	No problem detected.	None.
InternWarning = Warning	A warning has been issued.	Check the rest of the indicated results to find the fault.
MPM-modFail = OK	No problem detected.	None.
MPM-modFail = Fail	The main processing module has failed.	Contact your ABB representative for service.
MPM-modWarning = OK	No problem detected.	None.
MPM-modWarning = Warning	There is a problem with: • the real time clock. • the time synchronization.	Set the clock. If the problem persists, contact your ABB representative for service.

Indicated result	**Possible reason**	**Proposed action**
ADC-module = OK	No problem detected.	None.
ADC-module = Fail	The A/D conversion module has failed.	Contact your ABB representative for service.
Slot04BIM1 = Fail (Example data, se following section for details)	I/O module has failed.	Check that the I/O module has been configured and connected to the IOP1- block. If the problem persists, contact your ABB representative for service.
RealTimeClock = OK	No problem detected.	None.
RealTimeClock = Warning	The real time clock has been reset.	Set the clock.
TimeSync = OK	No problem detected.	None.
TimeSync = Warning	No time synchronization.	Check the synchronization source for problems. If the problem persists, contact your ABB representative for service.

Chapter 8 Configuring the digital communication modules

About this chapter

This chapter contains instructions on how to configure the digital communication modules, such as galvanic and optical modems.

1 Configuring the fibre optical modem

Two different levels of optical output power can be set on the HMI under:

Configuration/TerminalCom/RemTermCom/OptoPower

For the optical module, the optical output power has to be set according to the attenuation of the fibre optic link.

For multimode fibres:

- If the attenuation is less than 6 dB, use Low setting
- If the attenuation is higher than 10 dB, use High setting
- If the attenuation is between 6 and 10 dB, use either High or Low setting

For single-mode fibres:

- If the attenuation is higher than 5 dB, use High setting
- If the attenuation is between 0 and 5 dB, use either High or Low setting

To achieve the best operation, the optical communication modules at both terminals must be synchronised. To fulfil this, one terminal acts as a Master and the other as a Slave. This is set under:

Configuration/TerminalCom/RemTermCom/CommSync

This setting should not be mixed up with the Master-Slave setting for the differential function.

When communicating with FOX20 or FOX6Plus, the setting should be Slave.

When operating over dedicated fibres the setting shall be Master at one terminal and Slave at the other.

2 Configuring the short range fibre optical modem

No setting is available for the short range fibre optical modem on the HMI. There are however some settings that can be made on a DIP-switch located behind the cover around the fibre optic connectors at the back of the terminal according to figure 11. After the fibres has been disconnected, if attached, the cover plate can be removed just by pulling at the middle of the cover plate.

Note!

If handled carefully the cover plate can be removed also with the fibres attached.

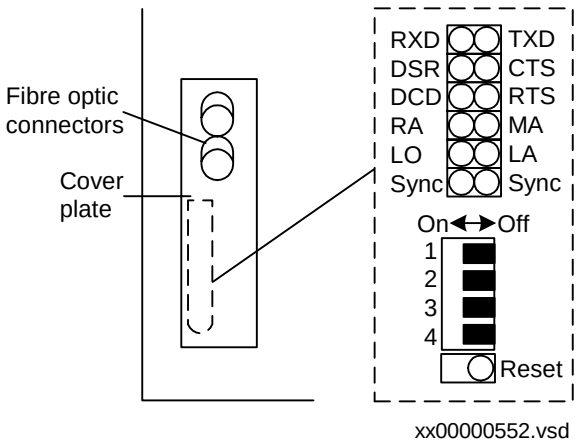

Figure 11: Setting and indications for short range optical modem

Switch 3 and 4 are used to set the source of timing. The function is according to setting of timing signal, table 2. When using the modem for optical point-to-point transmission, one modem should be set for locally created timing and the other for timing recovered from received signal. When the modems are communicating with a transceiver 21-15X or 16X the modems shall be set for timing recovered from received optical signal, see setting of timing signal.

The module can also synchronize received data with the send clock. This is not normally necessary in this application. Synchronization ON/OFF is controlled by switch 2, which shall normally be set in OFF position. When the module is set for synchronization (switch 2 = ON) switch 1 must be set in the position corresponding to the Sync LED that is brightest. If both have the same brightness the switch can be set in any position.

Note!

After any change of settings, the modem has to be reset by the Reset button located below the DIP-switch.

Table 2: Setting of timing signal

Switch no.		Function
3	**4**	
OFF	OFF	Timing created by the modem
OFF	ON	Timing recovered from received optical signal
ON	OFF	Timing created by the MPM module
ON	ON	No timing, the data transmission will not work

There are also some jumpers on the circuit board that have to be correctly set. One, S4 according to figure 13, is for changing the functionality between article number 1MRK 001 370-BA delivered with version 1.1, 1.2 and 2.0.(marked 1MRK001471-BA) and 1MRK 001 370-DA delivered with version 2.3 and higher (marked 1MRK001471-DA). The difference between these two is that the transmitted and received signal is inverted in one compared to the other.

When a terminal of version 1.1, 1.2 or 2.0 is to communicate with a terminal of version 2.3 or higher it is recommended that the jumper is changed to 1 MRK 001 370-BA in the version 2.3 terminal. This is due to that older versions of this module lacks the possibility to set article number, they are fixed set at 1 MRK 001 370-BA. If both terminals however include modules with possibility to change article number it actually doesn’t matter what article number is used as long as the same number is used in both terminals.

The other jumper is S3 that has to be in bottom position, as marked in figure 13. If it is in top position the communication will not work. (In top position the transmit clock is supposed to be created in the CPU on the MPM module which is not possible). On JTAG/ISP there shall be no jumpers inserted.

Note!

When using a set up according to figure 12 only at one end and for example a direct G.703 connection at the other end a short range fibre optical modem according to 1MRK 001 370-DA must be used.

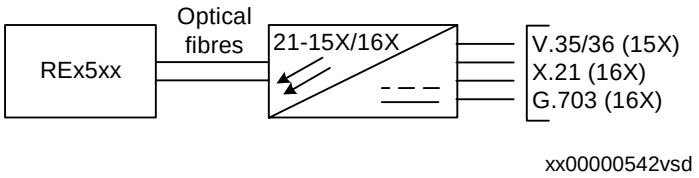

Figure 12: Multiplexed link, short range fibre optical connection

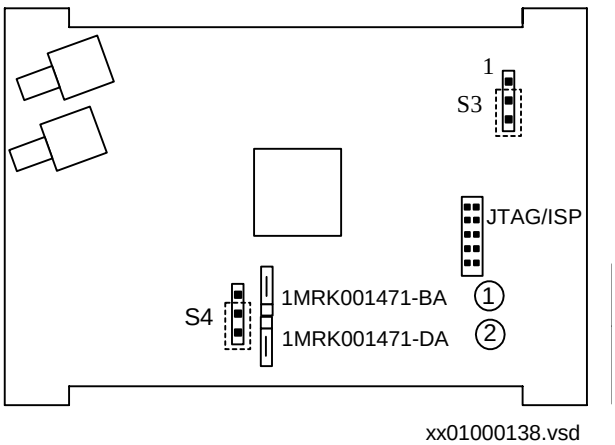

1	Delivered with version 1.1, 1.2 and 2.0
2	Delivered with version 2.3 or higher

Figure 13: Jumper location on short range optical modem

The jumpers are accessible after the modem has been pulled out. This is done by first removing all green 18-pin connectors at the back, then remove all screws holding the back plate. After the back plate has been removed the modem can be pulled out.

Note!

Only pull out the modem not the whole double size Euro-card. After the jumper settings has been changed put everything back in reverse order.

Note!

All electronic are sensitive to electrostatic discharge. Proper action must be taken at the work place to avoid electrostatic discharge! Disconnect DC.

There are also some indication for supervision of the communication channel that can be seen when the cover around the fibre optic connectors is removed. These LED's are found above the DIP-switches. The function of the LED's are explained in table 3.

Table 3: Indications

LED	Color	Explanation
RTS	Yellow	Request to send
CTS	Yellow	Clear to send
DSR	Yellow	Data communication correct
DCD	Yellow	Detection of carrier signal
TXD	Yellow	Transmitted data
RXD	Yellow	Received data
RA	Red	Remotely detected problem with link
MA	Red	Memory function for problem with link
LO	Green	Link operation correctly
LA	Red	Locally detected problem with link
Sync	Green	Used when synchronization is selected

3 Configuring the short range galvanic modem

No setting is available for the short range galvanic modem on the HMI. There are however some settings that can be made on a DIP-switch located behind the cover around the line connector at the back of the terminal according to figure 14. After the connector has been disconnected, if attached, the cover plate can be removed just by pulling at the middle of the cover plate. No settings are located on the circuit board.

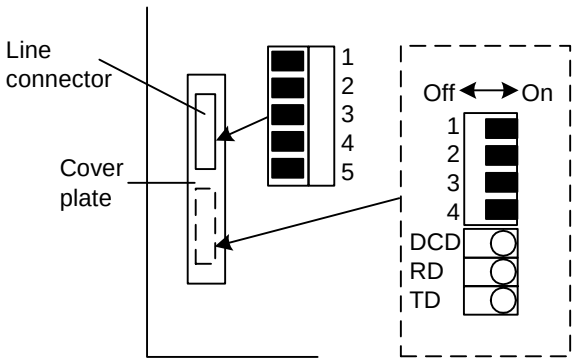

xx00000555.vsd

Figure 14: Setting and indications for short range galvanic modem

Only switch 1 and 2 are used on the DIP-switch. The function is according to the setting of timing signal, see table 4. In normal operation switch 1 is set in ON position at one end and switch 2 is set ON at the other end. The rest of the switches are set OFF.

Table 4: Setting of timing signal

Switch no.		Function
1	**2**	
OFF	OFF	Unpredictable, normally locally created timing
OFF	ON	Timing recovered from received signal
ON	OFF	Locally created timing
ON	ON	Timing recovered from received signal

There are also some indication for supervision of the communication channel that can be seen when the cover around the fibre optic connectors is removed. These LED’s are found below the DIP-switch. The function of the LED’s are explained in table 5.

Table 5: Indications

LED	Explanation
DCD	Detection of carrier signal
TD	Transmitted data
RD	Received data

4 Configure the interface modules for V.36, X.21 and RS530

The connector for X.21 is a 15 pin DSUB according to X.21 standard. For RS530 the connector is a 25 pin DSUB according to RS530 standard. The same 25 pin DSUB is also used for the V.36 connection contrary to the 37 pin DSUB listed in the standard. The pin lay-out is found in figure 15 and the explanation to designation in table 15.

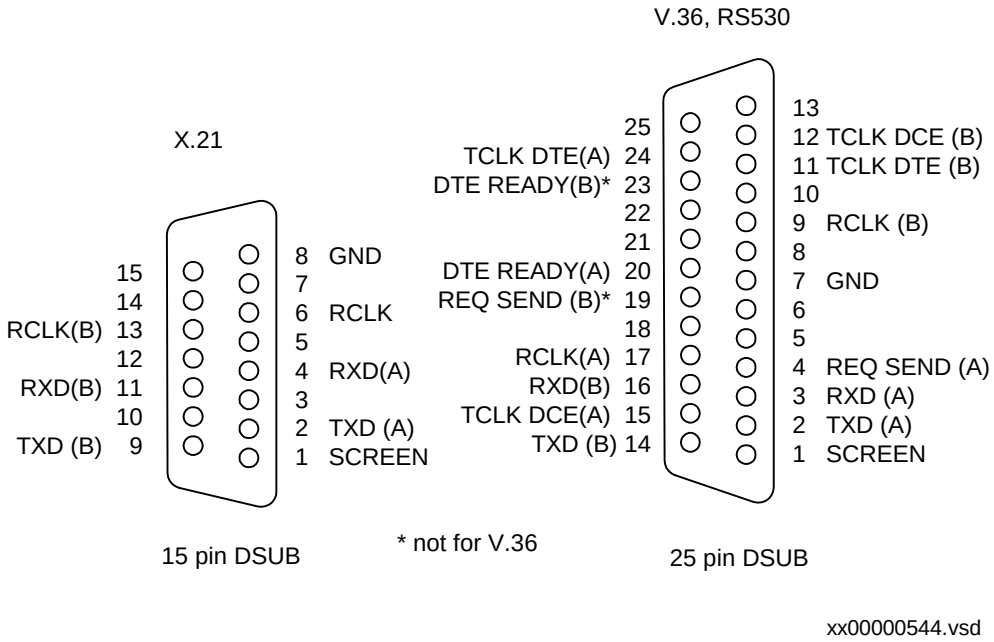

Figure 15: DSUB connectors

Table 6: DSUB connector explanation

Designation	Explanation
A	Designations of terminals according to CCITT, EIA etc.
B	Designations of terminals according to CCITT, EIA etc.
DCE	Data communication equipment (= multiplexer, etc.)
DTE	Data terminal equipment (= protection)
DTE READY	Data terminal ready (follows auxiliary voltage)
GND	Earth (reference for signals)
RCLK	Receiver signal timing

Designation	Explanation
REQ SEND	Request to send (follows auxiliary voltage)
RXD	Received data
SCREEN	Connection of cable screen
TCLK DCE	Transmitter signal timing from DCE
TCLK DTE	Transmitter signal timing from DTE
TXD	Transmitter data

For the co-directional operation the transmission rate of the transmitted signal must be set.This setting, 56 or 64 kbit/s, is done on the HMI under:

Configuration/TerminalCom/RemTermCom/BitRate

For X.21 and contra-directional operation no settings are available.

For the signals used by the protection, the communication module for V.36 also fulfils the older recommendation for V.35.

5 Configuring the interface modules for G.703 co-directional

No setting is available for the G.703 modem on the HMI. There are however some settings that can be made on a DIP-switch located behind the cover around the line connector at the back of the terminal according to figure 16. After the connector has been disconnected, if attached, the cover plate can be removed just by pulling at the middle of the cover plate. No settings are located on the circuit board.

Only switch 1 is used on the DIP-switch. In position ON the timing for transmission is created internally in the modem. In position OFF the timing for transmission is recovered from the received G.703 signal. Normally position OFF shall be used when the protection is connected to a multiplexer or other communication equipment.If used in back to back operation switch 1 is set in ON position at one end and in OFF position at the other end. The rest of the switches shall be set OFF.

There are also some indications for supervision of the communication channel that can be seen when the cover around the fibre optic connectors is removed. These LED’s are found below the DIP-switch. The function of the LED’s are explained in table 7 "Indications".

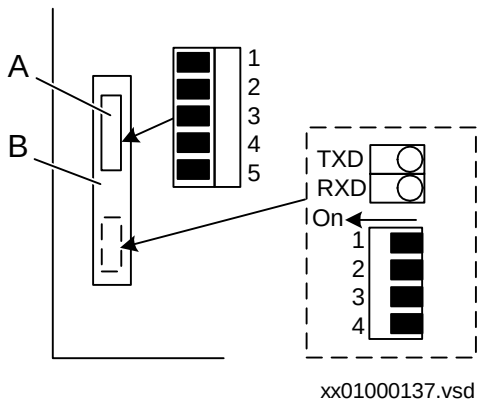

A	Line connector
B	Cover plate

Figure 16: G.703 modem, indications and settings

Table 7: Indications

LED	Explanation
TD	Transmitted data
RD	Received data

Chapter 9 Setting and configuring the terminal

About this chapter

This chapter describes how to set the terminal, either through a PC or the local HMI, and download a configuration to the terminal in order to make commissioning possible.

The chapter does not contain instructions on how to create a configuration or calculate settings. Please consult the application manual for further information about how to calculate settings.

1 Overview

The customer specific values for each setting parameter and a configuration file has to be available before the terminal can be set and configured, if the terminal is not delivered with a configuration.

Use the CAP 531 configuration tool to verify if the terminal has the expected configuration. A new configuration is performed with the CAP tool. The binary outputs can be selected from a signal list where the signals are grouped under their function names. It is also possible to specify a user-defined name for each input and output signal.

The configuration can be downloaded through the front connector on the local HMI or via the rear SPA port.

Each function included in the terminal has several setting parameters which has to be set in order to make the terminal behave as intended. A default value is provided for each parameter from factory. A setting file can be prepared using the parameter setting tool (PST), which is available in the CAP 540 package.

All settings can be:

- Entered manually through the local HMI.
- Downloaded from a PC, either locally or remotely using SMS/SCS. Front or rear port communication has to be established before the settings can be downloaded.

Note!

Be sure to configure the functional input HMI--BLOCKSET to only one of the available binary inputs before setting the parameter SettingRestrict to Block in the local HMI.

2 Entering settings through the local HMI

Each of the included functions in the terminal has to be set and this can be performed through the local HMI. The user must browse to the desired function and enter the appropriate value. The parameters for each function can be found in the local HMI. See the technical reference manual for a complete list of setting parameters for each function. Some of the included functions may not be used. In this case the user can set the parameter “Operation” to “Off” to disable the function.

Some settings can only be set through the local HMI, such as the setting access and the slave and baud rate when communicating with a PC software. The setting access can be blocked by the binary input signal HMI--BLOCKSET. When this signal is active all information, including the setting values, are still available to the user.

3 Downloading settings and configuration from a PC

3.1 Establishing front port communication

When a PC is used to download settings and configuration, you need the terminal toolbox CAP 540 (including CAP 531 and PST).

A special cable is needed when connecting a PC to the front of the REx 5xx terminal. This cable can be ordered from ABB. It must be plugged into the optical contact on the left side of the local HMI. The other end of the cable shall be plugged directly into the COM-port on the PC. The cable includes an optical contact, an opto/electrical converter and an electrical cable with a standard 9-pole D-sub contact. This ensures a disturbance-free and safe communication with the terminal.

When communicating from a PC, the slave number and baud rate (communication speed) settings must be equal in the PC-program and in the REx 5xx terminal.

Procedure

1. **Plug the cable to the optical contact on the local HMI.**
2. **Plug the other end of the cable to the COM port of the PC.**
3. **Set the slave number and baud rate in the terminal.**

   The slave number and baud rate settings in the REx 5xx terminal is done on the local HMI at:

   Configuration/TerminalCom/SPACom/Front

4. **Set the slave number and baud rate in the PC-program.**

   The slave number and baud rate must be the same as in the terminal. See the CAP 540 manual.

3.2 Establishing rear port communication

Settings can be performed via any of the optical ports at the rear of the REx 5xx terminal. When a PC is connected to the SMS system, the CAP 540 and the PST softwares are used. Settings can also be done via the SCS system, based on MicroLIBRARY.

3.2.1 Using the SPA/IEC rear port

For all settings and configuration via the SPA communication bus, the SPA/IEC 870-5-103 port on the rear, it is necessary to first deactivate the restriction for settings. Otherwise, no setting is allowed. This setting only applies for the SPA/IEC 870-5-103 port during SPA bus communication. The parameter can only be set on the local HMI, and is located at:

Configuration/TerminalCom/SPACom/Rear/SettingRestrict

It is also possible to permit changes between active setting groups with ActGrpRestrict in the same menu section.

When communicating with SMS or SCS via the SPA/IEC 870-5-103 port, the slave number and baud rate (communication speed) settings must be equal in the PC-program and in the REx 5xx terminal.

Using the SPA rear port

The slave number and baud rate settings of the rear SPA/IEC 870-5-103 port on the REx 5xx terminal, for SPA bus communication, is done on the local HMI at:

Configuration/TerminalCom/SPACom/Rear

Using IEC 870-5-103 rear port

The slave number and baud rate settings of the rear SPA/IEC 870-5-103 port on the REx 5xx terminal, for IEC 870-5-103 bus communication, is done on the local HMI at:

Configuration/TerminalCom/IECCom/Communication

3.2.2 Using LON rear port

The LON port is not affected by eventual restricted settings valid for the SPA/IEC port. When communicating via the LON port, the settings are done with the LNT, LON Network Tool. The settings are shown on the local HMI at:

Configuration/TerminalCom/LON Com

From this menu, it is also possible to send the “ServicePinMsg” to the LNT.

3.3 Downloading the configuration and setting files

When downloading a configuration to the REx 5xx terminal with the CAP 531 configuration tool, the terminal is automatically set in configuration mode. When the terminal is set in configuration mode, all functions are blocked. The red LED on the terminal flashes, and the green LED is lit while the terminal is in the configuration mode.

When the configuration is downloaded and completed, the terminal is automatically set into normal mode. For further instructions please refer to the users manuals for CAP 540 and PST.

Chapter 10 Establishing connection and verifying the SPA/IEC-communication

About this chapter

This chapter contains instructions on how to establish connection and verify that the SPA/IEC-communication operates as intended, when the terminal is connected to a monitoring or control system via the rear SPA/IEC port.

1 Entering settings

If the terminal is connected to a monitoring or control system via the rear SPA/IEC port, the SPA/IEC port has to be set either for SPA or IEC use.

1.1 Entering SPA settings

When using the IEC protocol, the rear SPA/IEC port must be set for IEC use.

The SPA/IEC port is located at terminal on the rear side of the terminal. Only optical fibres, plastic fibres with connector of type HFBR or glass fibres with connectors of type ST can be used.

Procedure

1. **Set the operation of the rear SPA/IEC port to “SPA”.**

   The operation of the rear SPA/IEC port can be found on the local HMI at:

   Configuration/TerminalCom/SPA-IECPort

   Now the SPA/IEC port operates as a SPA port.

2. **Set the slave number and baud rate for the rear SPA port**

   The slave number and baud rate can be found on the local HMI at:

   Configuration/TerminalCom/SPACom/Rear

   Set the same slave number and baud rate as set in the SMS system for the terminal.

1.2 Entering IEC settings

When using the IEC protocol, the rear SPA/IEC port must be set for IEC use.

The SPA/IEC port is located at terminal on the rear side of the terminal. Only optical fibres, plastic fibres with connector of type HFBR or glass fibres with connectors of type ST can be used.

Procedure

1. **Set the operation of the rear SPA/IEC port to “IEC”.**

   The operation of the rear SPA/IEC port can be found on the local HMI at:

   Configuration/TerminalCom/SPA-IECPort

   Now the SPA/IEC port operates as an IEC port.

2. **Set the slave number and baud rate for the rear IEC port**

   The slave number and baud rate can be found on the local HMI at:

   Configuration/TerminalCom/IECCom/Communication

   Set the same slave number and baud rate as set in the IEC master system for the terminal.

3. **Set the main function type of the terminal.**

   The main function type can be found on the local HMI at:

   Configuration/TerminalCom/IECCom/FunctionType

   The main function type can be set to values from 1 to 255 according to the standard. The value zero is default and corresponds to not used. Examples of values that can be used are:

   Table 8: Main function type examples

Value	Function type according to IEC 60870-5-103
128	Distance protection
160	Overcurrent protection
192	Line differential protection

   If the setting “OpFnType” is set to “ON” then the set value for function type will be used for all event blocks and the disturbance recorder, otherwise the setting on each event block and the disturbance recorder will decide the function type of that function block.

2 Verifying the communication

To verify that the rear SPA communication with the SMS/SCS system is working, there are some different methods. Choose one of the following.

2.1 Verifying SPA communication

Procedure

1. **Use a SPA-emulator and send “RF” to the terminal. The answer from the terminal should be “REx500 ”.**
2. **Generate one binary event by activating a function which is configured to an event block where the used input is set to generate events on SPA. The configuration must be made with the CAP5xx software. Verify that the event is presented in the SMS/SCS system.**

During the following tests of the different functions in the terminal, verify that the events and indications in the SMS/SCS system are as expected.

2.2 Verifying IEC communication

To verify that the IEC communication with the IEC master system is working, there are some different methods. Choose one of the following.

Procedure

1. **Use a protocol analyzer and record the communication between the terminal and the IEC master. Check in the protocol analyzer’s log that the terminal answers the master messages.**
2. **Generate one binary event by activating a function which is configured to an event block where the used input is set to generate events on IEC. The configuration must be made with the CAP5xx software. Verify that the event is presented in the IEC master system.**

During the following tests of the different functions in the terminal, verify that the events and indications in the IEC master system are as expected.

Chapter 11 Verifying settings by secondary injection

About this chapter

This chapter describes how to verify that the protection functions operates correctly according to the settings. Only the tested function should be in operation.

1 Overview

Required tools for testing of a terminal:

- Calculated settings
- Configuration diagram
- Terminal diagram
- Technical reference manual
- Three-phase test equipment

The terminal has to be set and configured before the testing can start.

The terminal diagram, available in the Technical reference manual, is a general diagram for the terminal. But note that the same diagram is not always applicable for each specific delivery (especially for the configuration of all the binary inputs and outputs). It is for this reason necessary to check before testing that the available terminal diagram corresponds to the terminal.

The Technical reference manual contains application and functionality summaries, function blocks, logic diagrams, input and output signals, setting parameters and technical data sorted per function.

The test equipment should be able to provide a three-phase supply of voltages and currents. The magnitude of voltage and current as well as the phase angle between voltage and current must be variable. The voltages and currents from the test equipment must be obtained from the same source and they must have a very small harmonic contents. If the test equipment cannot indicate the phase angle, a separate phase-angle meter is necessary.

Prepare the terminal for test before testing a particular function. Consider the logic diagram of the tested protection function when performing the test. All included functions in the terminal are tested according to the corresponding test instructions in this chapter. The functions can be tested in any order according to user preferences and the test instructions are therefor presented in alphabetical order. Only the functions that are used (Operation is set to On) should be tested.

The response from a test can be viewed in different ways:

- Binary outputs signals
- Service values in the local HMI (logical signal or phasors)
- A PC with CAP (configuration software) in debug mode

All used setting groups should be tested.

Note!

This terminal is designed for a maximum continuous current of four times the nominal current.

Note!

Please observe the measuring accuracy of the terminal, the test equipment and the angular accuracy for both of them.

Note!

Please consider the configured logic from the function block to the output contacts when measuring the operate time.

2 Preparing for test

2.1 Overview

This section describes how to prepare the terminal in order to verify settings.

The preparation starts with making the connections to the test switch if included. This means connecting the test equipment according to a valid terminal diagram for the specific REx 5xx terminal. The terminal can then be set in test mode in order to facilitate the test of individual functions and prevent unwanted operation from functions other than the tested. The test switch should then be connected to the terminal. The user could also verify the connection and that the analog inputs signals are measured correctly by injecting currents and voltages as required by the specific REx 5xx terminal. The tested function should then be released. The disturbance report settings could be checked to ensure that correct indications are given. The user could also identify the function to test in the technical reference manual to retrieve signals and parameters names etc.

2.2 Preparing the connection to the test equipment

The REx 5xx terminal can be equipped with a test switch of type RTXP 24. The test switch and its associated test plug handle (RTXH 24) are a part of the COMBITEST system which gives a secure and convenient testing of the terminal.

When the test-plug handle is inserted into the test switch, preparations for testing are automatically carried out in the proper sequence (i.e. blocking of tripping circuits, short circuiting of CT’s, opening of voltage circuits, making relay terminals available for secondary injection). Terminals 1 and 12 of the test switch are not disconnected as they are used for dc supply of the protection terminal.

The test-plug handle leads may be connected to any type of test equipment or instrument. When a number of protection terminals of the same type are tested, the test-plug handle need be moved only from the test switch of one protection terminal to the test switch of the other, without altering previously made connections.

To prevent unwanted tripping when the handle is withdrawn, latches on the handle secure it in the half withdrawn position. In this position, all voltages and currents are restored to the protection terminal and any reenergizing transients are given a chance to decay before the trip circuits are restored. When the latches are released, the handle can be completely withdrawn form the test switch, restoring the trip circuits to the protection terminal.

If a test switch is not used necessary actions need to be taken according to circuit diagram.

Warning!

Never disconnect a secondary connection of current transformer circuit without short-circuiting the transformer´s secondary winding. Operating a current transformer with the secondary winding open will cause a massive potential build-up that may damage the transformer and may cause injuries to humans.

2.3 Setting the terminal in test mode

The terminal can be set in test mode before test. This means that all included functions can be blocked or released as decided during the test. In this way, it is possible to test slower back-up measuring functions without the interference of faster measuring functions. Test mode is indicated when the yellow LED is flashing.

Procedure

1. **Browse to the ‘Operation’ menu and press ‘E’.**

   The Operation menu is located in the local HMI under:

   Test/TestMode/Operation

2. **Choose ‘On’ and press ‘E’.**
3. **Press ‘C’ twice to exit the menu.**

   The dialog ‘Save testGroup?’ appears.

4. **Choose ‘Yes’ and leave the menu.**

   The window repeatedly displays ‘Busy’ and after that the yellow LED starts flashing which indicates that the terminal is in test mode.

2.4 Connecting test equipment to the terminal

Before testing, connect the testing equipment according to the valid terminal diagram for each specific REx 5xx terminal. Pay special attention to the correct connection of the input and output current terminals, and to the connection of the residual current. Check that the input and output logical signals in the logic diagram for the tested function are configured to the corresponding binary inputs and outputs of the tested terminal.

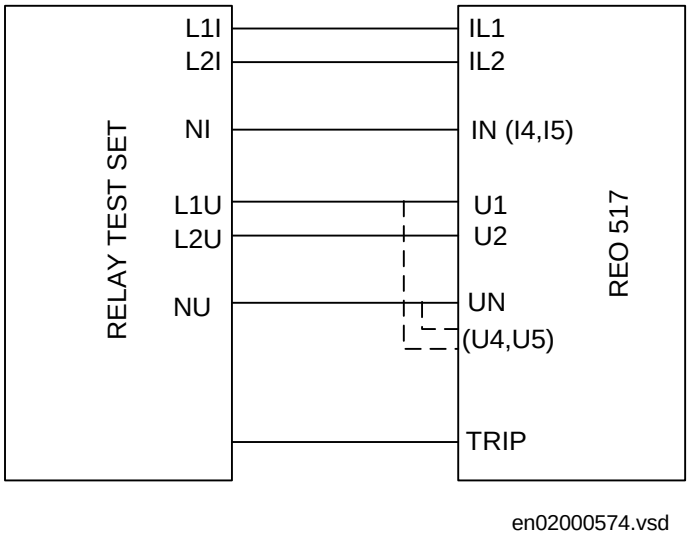

Figure 17: Connection of the test set to the REO 517 terminal

2.5 Verifying the connection and the analog inputs

The user must verify that the connection and that the analog signals are measured correctly.

Procedure

1. **Inject a through going phase-to-phase current and voltage at rated value.**
2. **Compare the injected value with the measured value.**

   The phasor menu is located in the local-HMI under:

   ServiceReport/Phasors/Primary and Secondary

   Consider set ratio factors for CT's and VT's.

3. **Compare the frequency reading with the set frequency and the direction of the power with the injected power.**

   The frequency and active power are located in the local-HMI under:

ServiceReport/ServiceValues

4. **Inject a unsymmetrical three-phase current and voltage at rated value in two phases.**
5. **Compare the injected value with the measured value.**

   The phasor menu is located in the local-HMI under:

   ServiceReport/Phasors/Primary and Secondary

2.6 Releasing the function(s) to be tested

The user can release the function(s) to be tested. This is done in order to set only the tested function(s) in operation and prevent other functions from operating. The user can release the tested function(s) by setting the corresponding parameter under BlockFunctions to NO in the local HMI. When testing a function in this blocking feature, remember that not only the actual function must be activated, but the whole sequence of interconnected functions (from measuring inputs to binary output contacts), including logic and so on. Before starting a new test mode session the user should scroll through every function to ensure that only the function to be tested (and the interconnected ones) are set to NO. A function is also blocked if the BLOCK input signal on the corresponding function block is active, which depends on the configuration. The user should therefore ensure that the logical status of the BLOCK input signal is equal to 0 for the tested function. The user could also individually block event blocks to ensure that no events are reported to remote station during the test.

Note!

The function is blocked if the corresponding setting under the BlockFunctions menu remains on and the TEST-INPUT signal remains active. All functions that where blocked or released from previous test mode session are still valid when a new test mode session is entered.

Procedure

1. **Browse to the 'BlockFunctions' menu.**

   The BlockFunctions menu is located in the local HMI under:

   Test/TestMode/BlockFunctions

2. **Browse to the function that should be released.**

   Use the left and right arrow buttons. Press 'E' when the desired function has been found.

3. **Select ‘No’.**
4. **Press ‘C’ twice to leave the menu.**

   The ‘Save TestGroup?’ dialog appears.

5. **Choose ‘Yes’ leave the menu.**

2.7 Checking the disturbance report settings

The terminal must be set in testmode (Operation=ON) to activate the disturbance report settings.

The user can select how the disturbances are indicated on the local HMI during the test. The user can for example select if the disturbance summary should be stored, scrolled on the local HMI or if LED information should be stored. Scroll to the disturbance report settings which are located in the local HMI under:

Test/TestMode/DisturbReport

Table 9: Disturbance report settings

Operation	Disturb-Summary	Then the results are...
Off	Off	• Disturbances are not stored. • LED information is not displayed on the HMI and not stored. • No disturbance summary is scrolled on the HMI.
Off	On	• Disturbances are not stored. • LED information (yellow - start, red - trip) are displayed on the local HMI but not stored in the terminal. • Disturbance summary is scrolled automatically on the local HMI for the two latest recorded disturbances, until cleared. • The information is not stored in the terminal.
On	On or Off	• The disturbance report works as in normal mode. • Disturbances are stored. Data can be read from the local HMI, a front-connected PC, or SMS.- LED information (yellow - start, red - trip) is stored. • The disturbance summary is scrolled automatically on the local HMI for the two latest recorded disturbances, until cleared. • All disturbance data that is stored during test mode remains in the terminal when changing back to normal mode.

2.8 Identifying the function to test in the technical reference manual

The user can use the technical reference manual (TRM) to identify function blocks, logic diagrams, input and output signals, setting parameters and technical data.

3 100 Hertz protection (HHZ)

Prepare the terminal for verification of settings as outlined in section “Preparing for test” in this chapter.

Ensure that the maximum continuous current of the terminal does not exceed four times its rated value.

3.1 Verifying the settings

Procedure

1. **Set the test equipment to inject a current in phase L1, with a frequence of 100 Hz.**
2. **Increase slowly the current until the output signal HHZ-TRIP activates.**
3. **Compare the measured operate value with the set value I_{100}>.**

   At low values of I_{100}> it can be preferable to fed the REO 517 with a mix of 16 Hz, 20% of I_r, + 100Hz current.

4. **Set the fault current to about 1.5 times the measured operating current.**
5. **Switch on the fault current and measure the operating time of the HHZ protection.**
6. **Switch off the fault current.**
7. **Activate the binary input HHZ-BLOCK**
8. **Switch on the fault current and check that the HHZ function is not activated.**
9. **Switch off the fault current and deactivate the binary input HHZ-BLOCK.**

3.2 Completing the test

Continue to test another function or complete the test by setting the test mode to off. Restore connections and settings to the original values, if they were changed for testing purpose.

4 Apparatus control

The apparatus control function consists of four types of function blocks, which are connected in a delivery-specific way between bays and to the station level. For that reason, test the total function in a system, that is, either in a complete delivery system as an acceptance test (FAT/SAT) or as parts of that system.

5 Automatic switch onto fault logic (SOTF)

Prepare the terminal for verification of settings as outlined in section “Preparing for test” in this chapter.

The switch-onto-fault function is checked by secondary injection tests together with the distance protection function and with the DLD function. The switch-onto-fault function is activated either by the external input SOTF-BC, or by the internal DLD function. The latter is done by a prefault condition with the phase voltages and currents at zero. At the fault an instantaneous trip shall be achieved together with the indication SOTF-TRIP. The following fault types should be tested.

For single phase systems:

- One phase-to-earth fault for loop L1 - N

For effectively earthed and isolated neutral-point and high impedance earthed two phase systems:

- Phase-to-phase fault for loop L1 - L2

5.1 External activation of SOTF function

Procedure

1. **Activate the switch-onto-fault (SOTF-BC) input.**

   During normal operating conditions, the SOTF-BC input is de-energised.

2. **Apply a fault condition with impedance at 50% of used zone setting and current greater than 30% of I_r.**
3. **Check that the correct trip outputs, external signals and indication are obtained.**

5.2 Automatic initiation of SOTF

Procedure

1. **Deactivate the switch-onto-fault (SOTF-BC) input.**
2. **Set current and voltage inputs to 0 for at least 1 second.**
3. **Apply a condition with impedance at 50% of used zone setting and current greater than 30% of I_r.**

4. **Check that the correct trip outputs, external signals and indication are obtained.**

5.3 Completing the test

Continue to test another function or complete the test by setting the test mode to off. Restore connections and settings to the original values, if they were changed for testing purpose.

6 Automatic reclosing function (AR)

Prepare the terminal for verification of settings as outlined in section “Preparing for test” in this chapter.

The test is performed together with protection and trip functions. Figure 18 illustrates a recommended testing scenario, where the circuit breaker is simulated by an external bistable relay (BR), for example an RXMVB2. The following switches are needed:

- Switch close (SC)
- Switch trip (ST)
- Switch ready (SRY).

SC and ST can be push-buttons with spring return. If no bistable relay is available, replace it with two self-reset auxiliary relays as in figure 18.

Use a secondary injection relay test set to operate the protection function. It is possible to use the BR to control the injected analogue quantities so that the fault only appears when the BR is picked up—simulating a closed breaker position.

To make the arrangement more elaborate, include the simulation of the operation gear condition, AR01-CBREADY, for the sequences Close-Open (CO) and Open-Close-Open (OCO).

The AR01-CBREADY condition at the CO sequence type is usually low for a recharging time of 5-10 s after a closing operation. Then it is high. The example shows that it is simulated with SRY, a manual switch.

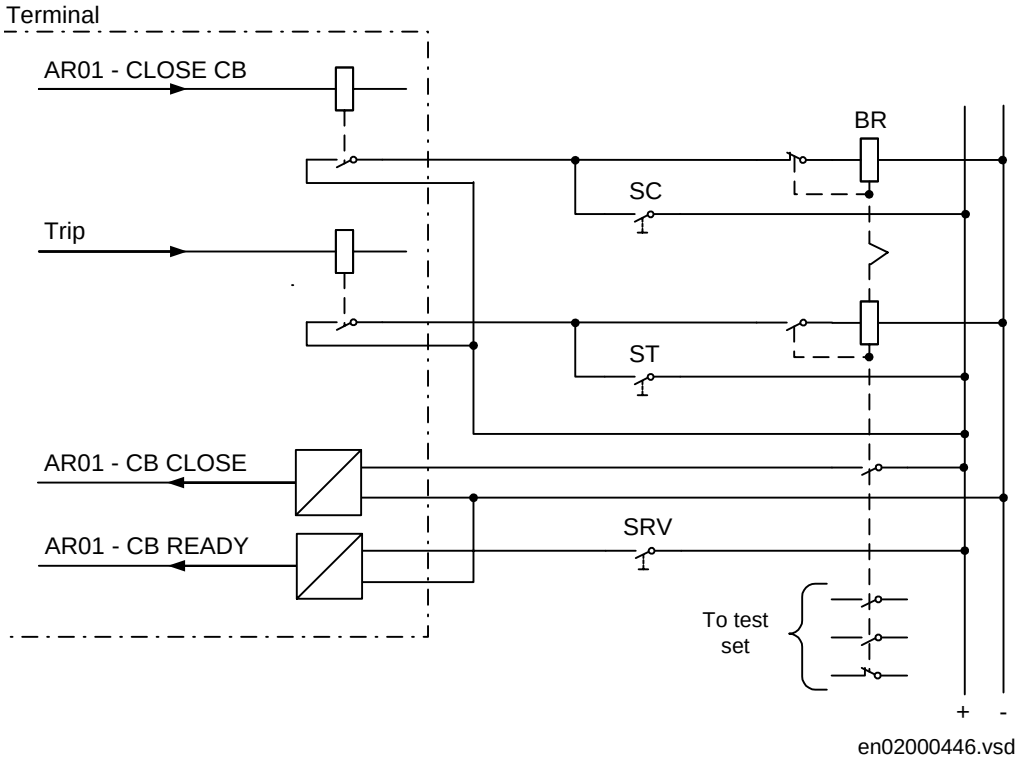

Figure 18: Simulating breaker operation with two auxiliary relays.

6.1 Preparing

1. **Check the settings of the autorecloser (AR) function.**

   The operation can be set at Stand-by (Off) in HMI tree:

   Settings/Functions/Group n/AutoRecloser/AutoRecloser n

   If any timer setting is changed so as to speed-up or facilitate the testing, they must be set to normal after the testing. A verification test has to be done afterwards.

2. **Check that the functional input signal SYNC is set to TRUE if the internal or external synchrocheck is not used.**
3. **Read and note the reclosing operate counters from the HMI tree:**

ServiceReport/Functions/AutoRecloser/AutoRecloser n/Counters

4. **Do the testing arrangements outlined above, for example as in figure 18.**
5. **The AR01-CBCLOSED breaker position, the commands Trip and Closing, AR01-CLOSECB, and other signals should preferably be arranged for event recording provided with time measurements.**

   Otherwise, a separate timer or recorder can be used to check the AR open time and other timers.

6.2 Checking the AR functionality

1. **Ensure that the voltage inputs to Synchro-check, when applied, give accepted conditions at open breaker (BR).**

   They can, for example, be Live busbar and Dead line.

2. **Set the operation at On.**
3. **Make a BR pickup by a closing pulse, the SC-pulse.**
4. **Close SRY, Breaker ready and leave it closed.**
5. **Inject AC quantities to give a trip and start AR in phase L1.**

   Observe or record the BR operation. The BR relay should trip and reclose. After the closing operation, the SRY switch could be opened for about 5 s and then closed.

   The AR open time and the operating sequence should be checked, for example, in the event recording.

   Check the operate indications and the operate counters.

   Should the operation not be as expected, the reason must be investigated. It could be due to an AR Off state or wrong program selection, or not accepted synchro-check conditions.

6. **Repeat procedure 5 for phase L2 and phase-to-phase trips, transient, and permanent fault.**

   The signal sequence diagrams in the Technical reference manual can be of guidance for the checking.

6.3 Checking the reclosing condition

The number of cases can be varied according to the application. Examples of selection cases are:

6.3.1 Checking the Inhibit signal

1. **Check that the function is operative and that the breaker conditions are okay.**
2. **Apply an AR01-INHIBIT input signal and start the reclosing function.**
3. **Check that there is no reclosing.**

6.3.2 Checking the closing onto a fault

1. **Set the breaker simulating relay, BR, in position open.**
2. **Then close it with the SC switch and start the AR within one second.**
3. **Check that there is no reclosing.**

6.3.3 Checking the breaker not ready

1. **Close the BR breaker relay and see that everything except for AR01-CBREADY is in normal condition (SRY is open).**
2. **Start the AR function.**
3. **Check that there is no reclosing.**

6.3.4 Checking the synchro-check condition

1. **Check the function at non-acceptable voltage conditions.**
2. **Wait for the time out, >5 s.**
3. **Check that there is no reclosing.**

6.3.5 Checking the operation Stand-by and Off

1. **Check that no reclosing can occur with the function in Off state.**

   Depending on the program selection and the selected fault types that start and inhibit reclosing, a check of no unwanted reclosing can be made. For example, if only single-phase reclosing is selected, a test can verify that there is no reclosing after phase-to-phase trips.

6.4 Testing the multi-breaker arrangement

If a multi-breaker arrangement is used for the application and priorities are given for the master (high) and slave (low) terminals, test that correct operation takes place and that correct signals are issued. The signals WFMASTER, UNSUC, WAIT and INHIBIT should be involved.

6.5 Completing the test

After the test, restore the equipment to normal or desired state. Especially check these items:

1. **Check and record the counter contents (Reset if it is the user's preference).**

   The counters menu is located in the local HMI under:

   ServiceReport/Functions/AutoRecloser/AutoRecloser n/Counters/Clear Counters

2. **Reset the setting parameters as required.**
3. **Disconnect the test switch or disconnected links of connection terminals.**
4. **Reset indications and events.**

   The ClearDistRep menu is located in the local HMI under:

DisturbReport/ClearDistRep

6.6 Completing the test

Continue to test another function or complete the test by setting the test mode to off. Restore connections and settings to the original values, if they were changed for testing purpose.

7 Binary signal transfer to remote end (RTC)

There are two types of internal self-supervision of the RTC.

The I/O-circuit board is supervised as an I/O module. For example it gives ‘FAIL’ if the board is not inserted. I/O-modules not configured are not supervised. When an RTC-module is configured as a logical I/O module it is also supervised.

Then there is also the communication supervision that gives ‘WARNING’ if one of the RTC-modules signals for ‘COMFAIL’. Each RTC-module has an error output (‘COM-FAIL’) which is set to a logical 1 if anything is wrong with the communication through the actual module. Status for inputs and outputs as well as self-supervision status are available from the local HMI.

Test correct functionality by simulating different kind of faults. Also check that sent and received data is correctly transmitted and read.

A test connection is shown in figure 19. A binary input (BI) is connected to a RTC function input in end1, for example RTC1-SEND01, and in the other end a binary output (BO) is connected to the received function output, for example RTC1-REC01. The binary signal is transferred to the remote end (end2) through a communication link. Check at the remote end that the corresponding signal (RTC1-REC01) has been received. Repeat the test for all the signals used by the RTC function.

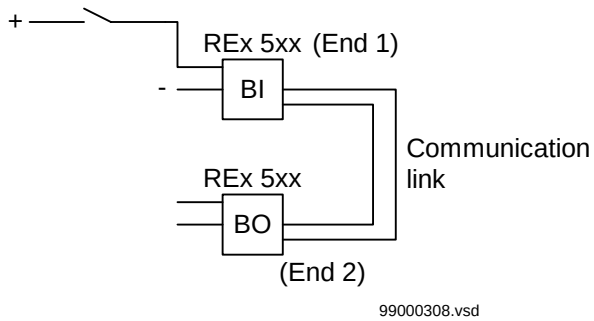

Figure 19: Test of RTC with I/O.

8 Breaker failure protection (BFP)

Prepare the terminal for verification of settings as outlined in section “Preparing for test” in this chapter.

Consider to release used start criteria. The trip is a pulse with a length of 150 ms. Fault condition: the current in a phase must exceed the set IP> as latest within the set t1 time after the BFP-START/BFP-STLn input is activated.

To verify the settings the following fault type should be tested:

- One for a phase-to-earth fault

The breaker-failure protection should be tested in co-operation with some other functions, and in particular with the protection and trip functions or via external start.

8.1 Verifying the settings

Procedure

1. **Apply the fault condition with a current below set IP>.**
2. **Repeat the fault condition and increase the current in step until trip appears.**
3. **Compare the result with the set IP>.**

   Note: If no I> check is set only back-up trip operate at set IP>.

8.2 Verifying the retrip setting

Choose one of the test cases in 8.2 "Verifying the retrip setting" according to valid setting.

8.2.1 Checking the retrip function with retrip set to off

Procedure

1. **Set RetripType = Retrip Off.**
2. **Apply the fault condition with current over the set value.**
3. **Verify that retrip in phase L1 is not achieved.**

8.2.2 Checking the retrip function with current check

Procedure

1. **Set RetripType = I> check.**

2. **Apply the fault condition with current over the set value.**
3. **Verify that retrip is achieved after t1 that back-up trip is achieved after t2.**

8.2.3 Checking the retrip function without current check

Procedure

1. **Set RetripType = No I> check.**
2. **Apply the fault condition with current below the set value.**
3. **Verify that retrip is achieved after t1.**
4. **Apply the fault condition with current over the set value.**
5. **Verify that back-up trip is achieved after t2.**

8.3 Completing the test

Continue to test another function or complete the test by setting the test mode to off. Restore connections and settings to the original values, if they were changed for testing purpose.

9 Dead line detection (DLD)

Prepare the terminal for verification of settings as outlined in section “Peparing for test” in this chapter.

Measure the set operate values for currents and voltages. Observe the functional output signals on the local HMI under the menu:

ServiceReport/Functions/DeadLineDet/FuncOutputs

It is also possible to configure the output signals to the binary outputs for testing purposes.

9.1 Verifying the settings

Procedure

1. **Set the phase L1 current to the rated value.**
2. **Decrease the phase current slowly, until the DLD--START signal changes to a logical 1.**

   Observe the functional output signal DLD-START on the HMI.
3. **Record the value and compare it with the set value IminOp.**

   IminOp is a parameter from the 3 zone impedance protection function, Z(n)RW.
4. **Set the phase current to 0.**
5. **Repeat steps 2 to 4 for phases L2.**
6. **Set the phase L1 voltage to the rated value.**
7. **Decrease the voltage slowly, until the DLD--START signal changes to a logical 1.**

   Observe the functional output signal DLD-START on the HMI.
8. **Record the value and compare it with the set value UPE<.**

   UPE< is a parameter from the Time delayed undervoltage protection function, TUV
9. **Set the voltage to 0.**
10. **Repeat steps 7 to 9 for phases L2.**
11. **Make sure that all signals are reconfigured to their initial state.**

9.2 Completing the test

Continue to test another function or complete the test by setting the test mode to off. Restore connections and settings to the original values, if they were changed for testing purpose.

10 Distance protection (Z(n)RW)

Prepare the terminal for verification of settings as outlined in section “Preparing for test” in this chapter. Consider to release one zone at the time and the TRIP-logic.

Measure operating characteristics during constant current conditions. Keep the measured current as close as possible to its rated value or lower. But ensure that it is higher than 30% of the rated current.

Ensure that the maximum continuous current of a terminal does not exceed four times its rated value, if the measurement of the operating characteristics runs under constant voltage conditions.

To verify the settings for the operating points according to figure 20, 21 and 22 (and table 10 "Test points for phase-to-phase loops (Ohm/Loop)" and table 11 "Test points for phase-to-earth (Ohm/Loop)") the following fault types should be tested.

For single phase systems:

- One phase-to-earth fault for loop L1 - N

For effectively earthed two phase systems:

- Phase-to-phase fault for loop L1 - L2
- Phase-to-earth fault for loop L1 - N and L2 - N

For isolated neutral-point and high impedance earthed systems:

- Phase-to-phase fault for loop L1 - L2

The shape of the operating characteristic depends on the values of the setting parameters.

Normaly, testpoints P1, P5 and P7 can be excluded from the tests. In order to verify the complete characteristic these testpoints can be used. Refer to figures 20, 21 and 22.

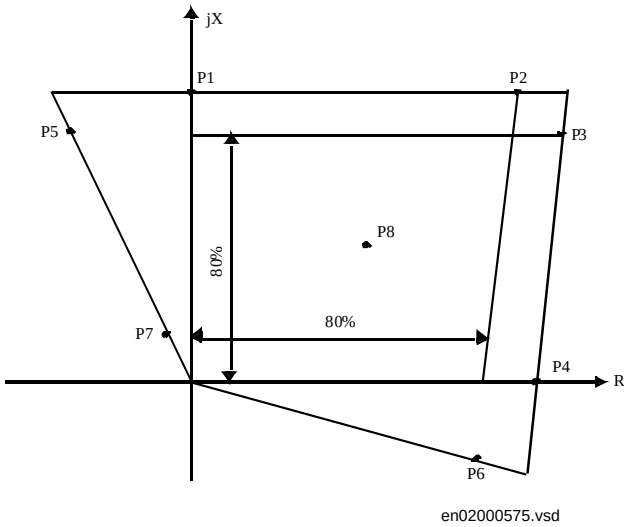

Figure 20: Test points for the distance protection (ZMn), operating characteristic case 1

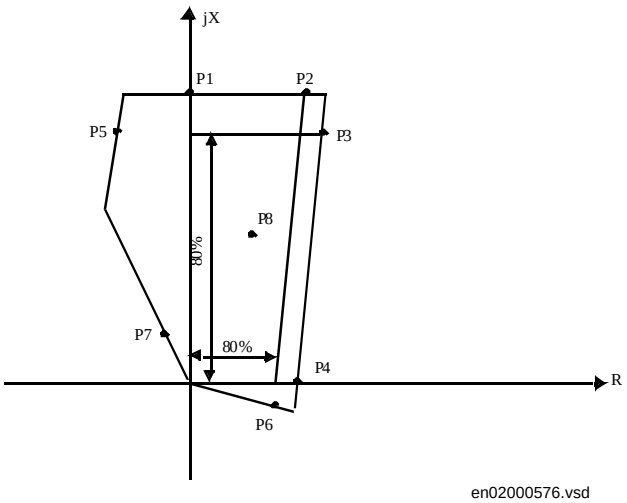

Figure 21: Test points for the distance protection (ZMn), operating characteristic case 2

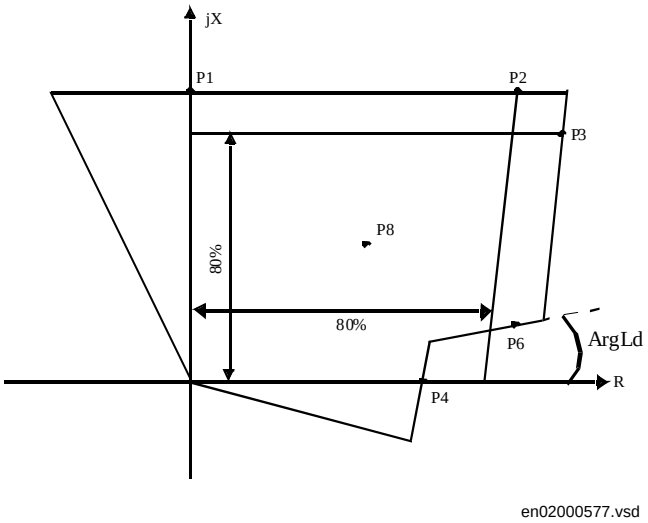

Figure 22: Test points for the distance protection (ZM2 and 3) with the LoadDiscr = On, operating characteristic case 3

Table 10: Test points for phase-to-phase loops (Ohm/Loop)

Test point	Reach	Set value	According to figure
P1	X	$2 \cdot X_{set}$	20 and 21
	R	0	
P2	X	$2 \cdot X_{set}$	20 and 21
	R	$0.8 \cdot RFPP_{set}$	
P3	X	$0.8 \cdot 2 \cdot X_{set}$	20 and 21
	R	$RFPP_{set} + 1.6 \cdot X_{set} \cdot \tan 9°$	
P4	X	0	20 and 21
	R	$RFPP_{set}$	
	R	$RFPP_{set\ zone\ 1}$ (for LoadDiscr = On)	22
P5	X	$P3_X$	20
	arg	115°	
P5	X	$P3_X$	21
	R	$RFPP_{set} + 1.6 \cdot X_{set} \cdot \tan 9°$	

Test point	Reach	Set value	According to figure
P6	arg	$ArgDir_{set}$ (for directional zone 1)	20 and 21
	arg	$ArgLd_{set}$ (for directional zone 2 and 3 at LoadDiscr = On)	22
P7	X	$0.1 \cdot P1_X$	20 and 21
	arg	115°	
P8	X	$0.5 \cdot 2 \cdot X_{set}$	20 and 21
	R	$0.5 \cdot RFPP_{set}$	

Table 11: Test points for phase-to-earth (Ohm/Loop)

Test point	Reach	Set value	According to figure
P1	X	Xset · (1 + KN)	20 and 21
	R	0	
P2	X	$X_{set} \cdot (1 + KN)$	20 and 21
	R	$0.8 \cdot RFPE_{set}$	
P3	X	$0.8 \cdot X_{set} \cdot (1 + KN)$	20 and 21
	R	$RFPP_{set} + 0.8 \cdot X_{set} \cdot (1 + KN) \cdot \tan 9°$	
P4	X	0	20 and 21
	R	$RFPE_{set}$	
	R	$RFPP_{set\ zone\ 1}$ (for LoadDiscr = On)	3
P5	X	$P3_X$	20
	arg	115°	
P5	X	P3X	21
	R	$RFPE_{set} + 0.8 \cdot X_{set} \cdot (1 + KN) \cdot \tan 9°$	
P6	arg	$ArgDir_{set}$ (for directional zone 1)	20 and 21
	arg	$ArgLd_{set}$ (for directional zone 2 and 3 at LoadDiscr = On)	22
P7	X	$0.1 \cdot P1_X$	20 and 21
	arg	115°	
P8	X	$0.5 \cdot X_{set} \cdot (1 + KN)$	20 and 21
	R	$0.5 \cdot RFPE_{set}$	

10.1 Verifying the settings

Procedure

1. **Supply the terminal with healthy conditions for at least two seconds.**
2. **Apply the fault condition and slowly decrease the measured impedance to find the operating value for the phase-to-phase loop for zone 1 according to test point P1 in table 10 "Test points for phase-to-phase loops (Ohm/Loop)" Compare the result of the measurement with the set value.**
3. **Repeat steps 1 to 2 to find the operating value for test point P2, P3 and P4 in table 10 "Test points for phase-to-phase loops (Ohm/Loop)" and the operating value for the phase-to-earth loop according to test point P1, P2, P3 and P4 in table 11 "Test points for phase-to-earth (Ohm/Loop)".**
4. **Supply the terminal with healthy conditions for at least two seconds.**
5. **Apply the fault condition and slowly increase the measured resistance to find the operating value for test point P5 in table 10 "Test points for phase-to-phase loops (Ohm/Loop)". Compare the result of the measurement with the set value.**
6. **Repeat steps 4 to 5 to find the operating value for test point P7 in table 10 "Test points for phase-to-phase loops (Ohm/Loop)" and P5 and P7 in table 11 "Test points for phase-to-earth (Ohm/Loop)".**
7. **Supply the terminal with healthy conditions for at least two seconds.**
8. **Apply the fault condition and slowly increase the measured reactance to find the operating value for test point P6 in table 10 "Test points for phase-to-phase loops (Ohm/Loop)". Compare the result of the measurement with the set value.**
9. **Repeat steps 7 to 8 to find the operating value for test point P6 in table 11 "Test points for phase-to-earth (Ohm/Loop)".**
10. **Repeat steps 1 to 3 and 8 for all other used measuring zones.**

Note!

The zones that are not tested have to be blocked and the zone that is tested has to be released.

10.2 Measuring the operate time of distance protection zones

Procedure

1. **Supply the terminal with healthy conditions for at least two seconds.**
2. **Apply the fault condition to find the operating time for the phase-to-phase loop according to test point P8 in table 10 "Test points for phase-to-phase loops (Ohm/Loop)" for zone 1. Compare the result of the measurement with the setting t1.**
3. **Repeat steps 1 to 2 to find the operating time for the phase-to-earth loop according to test point P4 in table 11 "Test points for phase-to-earth (Ohm/Loop)". Compare the result of the measurement with the setting t1.**
4. **Repeat steps 1 to 3 to find the operating time for all other used measuring zones.**

Note!

The zones that are not tested have to be blocked and the zone that is tested has to be released.

10.3 Completing the test

Continue to test another function or complete the test by setting the test mode to off. Restore connections and settings to the original values, if they were changed for testing purpose.

11 Disturbance recorder (DRP)

Evaluation of the results from the disturbance recording function requires access to a workstation either permanently connected to the terminal or temporarily connected to the serial port on the front. The CAP tool software package must be installed in the workstation.

It could be useful to have a printer for hard copies. The behavior of the disturbance recording function can be checked when protective functions of the terminal are tested. When the terminal is set to operate in test mode, there is a separate setting for operation of the disturbance report, which also affects the disturbance recorder.

A manual trig can be started any time. This results in a snap-shot of the actual values of all recorded channels.

12 Event counter (CN)

The function can be tested by connecting a binary input to the counter under test and from outside apply pulses to the counter. The speed of pulses must not exceed 10 per second. Normally the counter will be tested in connection with tests on the function that the counter is connected to, such as trip logic. When configured, test it together with the function which operates it. Trig the function and check that the counter has followed the number of operations.

13 Event function (EV)

During testing, the terminal can be set in test mode from the PST. The functionality of the event reporting during test mode is set from the PST as follows:

- Use event masks
- Report no events
- Report all events

In Test Mode, individual event blocks can be blocked from the PST.

Individually event blocks can also be blocked from the local HMI under the menu:

Test/TestMode/BlockEventFunc

14 Event recorder

During testing, the event recorder can be switched off if desired. This is found in the SMS or Substation Control System (SCS).

15 Fault locator (FLOC)

Prepare the terminal for verification of settings as outlined in section “Preparing for test” in this chapter.

The distance to fault, as calculated for each fault separately, will automatically be displayed on the local HMI for each fault that also causes the non-delayed tripping operation and has been detected by the built-in, phase-selection function. The FLOC-function will not calculate the distance to the fault if faults are repeated in periods shorter than 10 seconds. The values of the currents and voltages are stored in the terminal memory as new disturbances. Start of the calculation of a distance to fault can always be manually initiated.

Distances to faults for the last 10 recorded disturbances can be found on the local HMI under the menu:

DisturbReport/Disturbances/Disturbance n (n=1-10)/FaultLocator

Table 12: Test settings

Parameter:	Condition
I	Higher than 30% I_r
Healthy conditions	U =110 V, I = 0 A & ZF = 0°
Impedance |Z|	Test point Note: • $Z_X \leq$ (X0 + X1)/2 For single-phase faults in two-phase effectively earthed systems • $Z_X \leq$ X1 For single phase systems and for phase-to-phase faults in two-phase systems
Impedance angle ZΦ	Test angle • ZΦ arctan[(X0 + X1) / (R0 + R1)] For single-phase faults • ZΦ arctan(X1/R1) For two-phase faults

15.1 Measuring the operate limit

Procedure

1. **Set the test point (|Z| fault impedance and ZΦ impedance phase angle) for a condition that meets the requirements in table .**

2. **Supply the relay with healthy conditions for at least two seconds.**
3. **Apply a fault condition.**

   Check that the distance-to-fault value displayed on the HMI complies with the following equations (the error should be less than five percent):

$$p = \frac{Z_x}{X1} \cdot 100$$

(Equation 1)

in % for single phase systems and for phase-to-phase faults in two-phase systems

$$p = \frac{2 \cdot Z_x}{X0 + X1} \cdot 100$$

(Equation 2)

in % for single-phase-to-earth faults in two-phase effectively earthed systems

Where:

p = the expected value of a distance to fault in percent

Z_x = set test point on the test set

X0 = set zero-sequence reactance of a line

X1 = set positive-sequence reactance of a line

15.2 Completing the test

Continue to test another function or complete the test by setting the test mode to off. Restore connections and settings to the original values, if they were changed for testing purpose.

16 Fuse failure supervision (FFRW)

Prepare the terminal for verification of settings as outlined in section “Preparing for test” in this chapter.

The verification is divided in two main parts. The first part checks that binary inputs and outputs operate as expected according to actual configuration. In the second part the relevant set operate values are measured.

The corresponding binary signals that inform the operator about the operation of the FFRW function are available on the local human-machine interface (HMI) unit under the menu:

Service Report/Functions/FuseFailure/FuncOutputs

16.1 Checking that the binary inputs and outputs operate as expected

Procedure

1. **Simulate normal operating conditions with the phase currents in phase with their corresponding phase voltages and with all of them equal to their rated values.**
2. **Connect the nominal dc voltage to the FFRW-DISC binary input.**
   - The signal FFRW-VTSU should appear with almost no time delay.
   - No signals FFRW-VTSZ should appear on the terminal.
   - Only the distance protection function operates.
   - No other undervoltage-dependent functions must operate.
3. **Disconnect the dc voltage from the FFRW-DISC binary input terminal.**
4. **Connect the nominal dc voltage to the FFRW-MCB binary input.**
   - The FFRW-VTSU and FFRW-VTSZ signals should appear without any time delay.
   - No undervoltage-dependent functions must operate.
5. **Disconnect the dc voltage from the FFRW-MCB binary input terminal.**

16.2 Checking the operation of the du/dt, di/dt based function

Procedure

1. **Simulate normal operating conditions with the phase currents in phase with their corresponding phase voltages and with all of them equal to their rated values.**
2. **Disconnect one of the phase voltages and observe the logical output signals on the terminal binary outputs.**

   FFRW-VTSU and FFRW-VTSZ signals should simultaneously appear.

3. **After more than 5 seconds disconnect the remaining phase voltage and both currents.**
4. **Simultaneously establish normal voltage and current operating conditions and observe the corresponding output signals.**

   They should change to the logical 0 as follows:

   - Signal FFRW-VTSU after about 50 ms
   - Signal FFRW-VTSZ after about 200 ms

5. **Connect the nominal dc voltage to the FFRW-CBCLOSED binary input.**
6. **Change the voltages and currents in both phases simultanously.**

   The voltage change should be greater then set DU> and the current change should be less than the set DI<.

   - The FFRW-VTSU and FFRW-VTSZ signals appear without any time delay. If the remaining voltage levels are higher than the set U< of the DLD function, only a pulse is achieved.

7. **Apply normal conditions as in step 1.**

   The FFRW-VTSU and FFRW-VTSZ signals should reset, if activated. See step 6.

8. **Disconnect the dc voltage to the FFRW-CBCLOSED binary input.**
9. **Repeat step 6.**
10. **Connect the nominal voltages in both phases and feed a current below the operate level in both phases.**

11. **Keep the current constant. Disconnect the voltage in both phases simultaneously.**

    The FFRW-VTSU and FFRW-VTSZ signals should not appear.

16.3 Completing the test

Continue to test another function or complete the test by setting the test mode to off. Restore connections and settings to the original values, if they were changed for testing purpose.

17 High speed and instanteaneous phase overcurrent protection (HSOC, IOC)

Prepare the terminal for verification of settings as outlined in section “Preparing for test” in this chapter.

To verify the settings the following fault type should be tested:

- A phase-to-earth fault

Ensure that the maximum continuous current of the terminal does not exceed four times its rated value.

17.1 Verifying the settings

Phase overcurrent protection

Procedure

1. **Inject a phase current in the terminal with start below the setting value.**
2. **Increase the injected current in the L*n* phase until the IOC--TRL*n* (*n*=1, 2) signal appears.**
3. **Switch off the fault current.**

   Observe the maximum permitted overloading of the current circuits in the terminal.

4. **Compare the measured operating current with the set value.**
5. **Actvate the input signal IOC-BLOCK. Increase the injected current quickly in the L*n* phase until the HSOC--TRL*n* (*n*=1, 2) signal appears.**
6. **Switch off the fault current.**

   Observe the maximum permitted overloading of the current circuits in the terminal.

7. **Compare the measured operating current with the set value.**
8. **Also activate the input signal HSOC-BLOCK. Check that both overcurrent functions are blocked. Deactivate the input signals.**
9. **Check that the protection functions are blocked using the setting Operation = Off and with BlockIOC = Yes and BlockHSOC = Yes.**

10. Repeate the tests 1 - 9 for the second phase

17.2 Completing the test

Continue to test another function or complete the test by setting the test mode to off. Restore connections and settings to the original values, if they were changed for testing purpose.

18 Intercircuit bridging protection (TOVI)

Prepare the terminal for verification of settings as outlined in section “Preparing for test” in this chapter. For 16 2/3 Hz relays, use input (U1) and inject 50 Hz fault voltage and for 50 Hz relays, use input (U4) and inject 16 2/3 Hz fault voltage.

18.1 Verifying the settings

Procedure

1. **Check that the input logical signal TOVI--BLOCK is logical zero and note on the local HMI that the TOVI--TRIP logical signal are equal to the logical 0.**

   Logical signals for intercircuit bridging protection are available under menu tree:

   Service Report/Functions/IntCircBridge/FuncOutputs

2. **Quickly set the measured voltage (fault voltage) to about 110% of the setting (U>, phase-neutral) operating voltage, and switch off the voltage with the switch.**
3. **Switch on the fault voltage and measure the operating time of the TOVI protection.**

   Use the TOVI--TRIP signal from the configured binary output to stop the timer.

4. **Compare the measured time with the set value t.**
5. **Activate the TOVI--BLOCK binary input.**
6. **Switch on the fault voltage (110% of the setting) and wait longer than the set value t.**

   No TOVI--TRIP signal should appear.

7. **Switch off the fault voltage.**
8. **Reset the TOVI--BLOCK binary input.**
9. **Quickly set the measured voltage (fault voltage) in same phase to about 90% of the setting (U>) operating voltage, and switch off the voltage with the switch.**
10. **Switch on the fault voltage and wait longer than the set value t.**

    No TOVI--TRIP signal should appear.

11. **Switch off the fault voltage.**

18.2 Completing the test

Continue to test another function or complete the test by setting the test mode to off. Restore connections and settings to the original values, if they were changed for testing purpose.

19 Interlocking

The interlocking function consists of a bay-level part and a station-level part. The interlocking is delivery specific and is realised by bay-to-bay communication over the station bus. For that reason, test the function in a system, that is, either in a complete delivery system as an acceptance test (FAT/SAT) or as parts of that system.

20 Inverse time delayed undervoltage protection (TUV2)

Prepare the terminal for verification of settings as outlined in section “Preparing for test” in this chapter.

To verify the settings the following fault type should be tested:

- Decrease of voltage in applicable phases.

20.1 Verifying the settings

Procedure

1. **Supply the terminal with phase-to-neutral voltages to the rated values.**
2. **Decrease the voltage until trip occurs.**

   Values of the logical signals belonging to the time delayed residual overcurrent protection are available under menu tree:

   ServiceReport/Functions/InvTimeDelayUV/FuncOutputs

3. **Note the operate value and compare it with the set value U<.**
4. **Measure the operate time for the output signal TUV2-TRIP when the voltage is instantaneously reduced from rated value to 0,8 · U<.**

   The operate time should be 9,5 · K.

5. **Increase the measured voltage to the set operate value U<.**
6. **Instantaneously decrease the voltage to zero.**
7. **Check that the operate time correspond with the set value for K.**
8. **Increase the measured voltage to the set operate value U<.**
9. **Repeate the measurements 2 - 8, for the other phase, if aplicable.**
10. **Connect the rated DC voltage to the TUV2-BLOCK configured binary input and disconnect one of the phase voltages from the terminal.**

    No TUV2-START nor TUV2-TRIP should appear.

20.2 Completing the test

Continue to test another function or complete the test by setting the test mode to off. Restore connections and settings to the original values, if they were changed for testing purpose.

21 Line test function (LITE)

Prepare the terminal for verification of settings as outlined in section “Preparing for test” in this chapter.

Check the operation of the LITE function by using a testing equipment that can give two independent, variable voltages and has an integrated timer.

Connect the testequipment to REO 517 in accordance with the applicable circuit and output diagrams.

The setting for the time delay t should temporarily be set to zero.:

21.1 Verifying the settings for Operation=Linetest

Procedure

1. **Activate the input signals LITE-TESTON and LITE-TROPEN. Check that the output signal LITE-INTEST is activated and the output signal LITE-NOTEST is deactivated.**
2. **Actvate the inputsignals LITE-START and LITE-CLOSECB and check that the output signal LITE-CLOSECB is activated for 200 ms.**
3. **Deactivate the input signal LITE-TESTON and activate the input signal LITE-CBCLOSED. Also activate the input signal LITE-TESTOFF and check that the output signal LITE-OPENCB and LITE-STARTAR are activated for 200 ms.**

   LITE-NOTEST should appear and LITE-INTEST should disapear.

4. **Activate the input signal LITE-START and LITE-TBCLOSED.**
5. **Slowly increase the line voltage until function on the output signal LITE-CLOSECB.**
6. **Compare the measured voltage with set value ULTest>.**
7. **Switch on a line voltage of 1,5 times the operate value ULTest> and check that the delay of the operate for the signal LITE-CLOSECB corresponds with the set time t.**
8. **Switch off the voltage and check that the signal reset after 200 ms.**

21.2 Verifying the settings for Operation=Voltagecheck

Procedure

1. **Repeate the test procedure according to point 4 - 8 under Operation=Linetest above.**
2. **Deactivate the signal LITE-TBCLOSED. Connect a busbar voltage of 1,5 times the operate value UBNormal> and slowly increase the injected line voltage until the output signals LITE-CLOSESCB and LITE-BLKTB operates.**
3. **Compare the measured voltage with set value ULNormal>.**
4. **Connect a line voltage of 1,5 times the operate value ULNormal> and slowly increase the injected busbar voltage until the output signals LITE-CLOSESCB and LITE-BLKTB operates.**
5. **Compare the measured voltage with set value UBNormal>.**
6. **Deactivate the signal LITE-START and check that the output signal LITE-CLOSECB not activates.**
7. **Connect a busbar voltage of 1,5 times the operate value UBNormal> and a line voltage of 1,5 times the operate value ULNormal> and switch in both voltages at the same time and check that the sinal LITE-BLKTB is activated after a delay of 100 ms.**
8. **Activate the binary input LITE-BLOCK and check that all the output operations are blocked.**
9. **Deactivate the signal LITE-BLOCK.**

21.3 Completing the test

Continue to test another function or complete the test by setting the test mode to off. Restore connections and settings to the original values, if they were changed for testing purpose.

22 Monitoring of AC analogue measurements

Stabilized ac current and voltage generators and corresponding current, voltage, power and frequency meters with very high accuracy are necessary for testing the alternating quantity measuring function. The operating ranges of the generators must correspond to the rated alternate current and voltage of each terminal.

Prepare the terminal for verification of settings as outlined in section “Preparing for test” in this chapter. Connect the generators and instruments to the corresponding input terminals of a unit under test.

22.1 Verifying the settings

Procedure

1. **Supply the terminal with voltages and currents.**

   Check that the values presented on the HMI unit correspond to the magnitude of input measured quantities within the limits of declared accuracy. The mean service values are available under the submenu:

   Service Report/ServiceValues

   The phasors of up to five input currents and voltages are available under the submenu:

   Service Report/Phasors/Primary

2. **Check the operation of ADBS or IDBS when applicable. Compare with the expected values.**

   The operation of ADBS or IDBS function can be checked separately with the RepInt = 0 setting. The value on the HMI follows the changes in the input measuring quantity continuously.

3. **Check the set operate levels of the monitoring function by changing the magnitude of input quantities and observing the operation of the corresponding output relays.**

   The output contact changes its state when the changes in the input measuring quantity are higher than the set values HIWARN, HIALARM, or lower than the set values LOWWARN, LOWALARM.

22.2 Completing the test

Continue to test another function or complete the test by setting the test mode to off. Restore connections and settings to the original values, if they were changed for testing purpose.

23 Monitoring of DC analogue measurements

A stabilized direct current generator and mA meter with very high accuracy for measurement of direct current is needed in order to test the dc measuring module. The generator operating range and the measuring range of the mA meter must be at least between -25 and 25 mA.

Prepare the terminal for verification of settings as outlined in section “Preparing for test” in this chapter. Connect the current generator and mA meter to the direct current input channels to be tested.

23.1 Verifying the settings

Procedure

1. **Consider the need to block output signals.**
2. **Check that the values presented on the HMI module corresponds to the magnitude of input direct current within the limits of declared accuracy.**

   The service value is available under the submenu:

   Service Report/I/O/Slotnm-MIMx/MIxy-Value

where:

nm represents the serial number of a slot with tested mA input module

x represents the serial number of a mA input module in a terminal

y represents the serial number of a measuring channel on module x.

3. **Check the operation of ADBS or IDBS function when applicable. Compare with the expected values.**

   The operation of ADBS or IDBS function can be checked separately with the setting of RepInt = 0. The value on the HMI must change only when the changes in input current (compared to the present value) are higher than the set value for the selected dead band.

4. **Check the operating monitoring levels by changing the magnitude of input current and observing the operation of the corresponding output relays.**

   The output contact changes its state when the changes in the input measuring quantity are higher than the set values RMAXAL, HIWARN, HIALARM, or lower than the set values LOWWARN, LOWALARM, RMINAL.

23.2 Completing the test

Continue to test another function or complete the test by setting the test mode to off. Restore connections and settings to the original values, if they were changed for testing purpose.

24 Multiple command (CM)

Test of the multiple command function block is recommended to be performed in a system, that is, either in a complete delivery system as an acceptance test (FAT/SAT) or as parts of that system, because the command function blocks are connected in a delivery-specific way between bays and the station level.

Command function blocks included in the operation of different built-in functions must be tested at the same time as their corresponding functions.

25 Pulse counter logic (PC)

The test of the pulse counter function requires at least the PST Parameter Setting Tool or SPA (or LON) connection to a station HMI including corresponding functionality. A known number of pulses are with different frequency connected to the pulse counter input. The test should be performed for the settings operation = Off/On and for blocked/deblocked function. The pulse counter value is then read by the PST or station HMI.

26 Scheme communication logic for residual overcurrent protection (EFC)

Prepare the terminal for verification of settings as outlined in section “Preparing for test” in this chapter. Before testing the communication logic for residual overcurrent protection, the time delayed residual overcurrent protection has to be tested according to the corresponding instruction. Then continue with the instructions below.

26.1 Verifying the settings

26.1.1 Blocking scheme

Procedure

1. **Set the angle of UL1 to 0° and the angle of UL2 to 180°. Set the amplitude of UL1 to be <2% of Ub, and set the amplitude for UL2 equal to Ub.**
2. **Set angle of IL1 to -65° (+295°). Set the amplitude IL2 to 0 A and the angle to 0 . Increase the current IL1 to about 110% of the set operate current, in order to get a signal by TEFn-STFW.**
3. **Switch off the fault current.**
4. **Switch on the fault current and measure the operating time of the EFC logic.**

   Use the EFC-TRIP signal from the configured binary output to stop the timer.

5. **Compare the measured time with the set value tCoord.**
6. **Activate the EFC-CR binary input.**
7. **Check that the EFC-CRL output is activated when EFC-CR input is activated.**
8. **Switch on the fault current (110% of the setting) and wait longer than the set value tCoord.**

   No EFC-TRIP signal should appear.

9. **Switch off the fault current.**
10. **Reset the EFC-CR binary input.**
11. **Activate the EFC-BLOCK digital input.**
12. **Switch on the fault current (110% of the setting) and wait longer than the set value tCoord.**

    No EFC-TRIP signal should appear.

13. **Switch off the fault current and the polarising voltage.**
14. **Reset the EFC-BLOCK digital input.**

26.1.2 Permissive scheme

Procedure

1. **Set the angle of UL1 to 0° and the angle of UL2 to 180°. Set the amplitude of UL1 to be <2% of Ub, and set the amplitude for UL2 equal to Ub.**
2. **Set angle of IL1 to -65° (+295°). Set the amplitude IL2 to 0 A and the angle to 0 . Increase the current IL1 to about 110% of the setting operating current, in order to get a signal by TEFn-STFW.**
3. **Switch off the current with the switch.**
4. **Switch on the fault current (110% of the setting).**

   No EFC-TRIP signal should appear, and the EFC-CS binary output should be activated.

5. **Switch off the fault current.**
6. **Activate the EFC-CR binary input.**
7. **Switch on the fault current (110% of the setting) and measure the operating time of the EFC logic.**

   Use the EFC-TRIP signal from the configured binary output to stop the timer. The signal should not have any delay time.

8. **Activate the EFC-BLOCK digital input.**
9. **Switch on the fault current (110% of the setting).**

   No EFC-TRIP signal should appear.

10. **Switch off the fault current and the polarising voltage.**
11. **Reset the EFC-CR binary input and the EFC-BLOCK digital input.**

26.2 Completing the test

Continue to test another function or complete the test by setting the test mode to off. Restore connections and settings to the original values, if they were changed for testing purpose.

27 Setting lockout (HMI)

27.1 Verifying the settings

Prepare the terminal for verification of settings as outlined in section “Preparing for test” in this chapter.

Procedure

1. **Configure the HMI--BLOCKSET functional input to the binary input, which is determined by the engineering or the input that is not used by any other function.**
2. **Set the setting restriction to SettingRestrict = Block.**
3. **Connect rated DC voltage to the selected binary input.**
4. **Try to change the setting of any parameter for one of the functions.**

   Reading of the values must be possible.

   The terminal must not respond to any attempt to change the setting value or configuration.

5. **Disconnect the control DC voltage from the selected binary input.**
6. **Repeat the attempt under step 4 "Try to change the setting of any parameter for one of the functions.".**

   The terminal must accept the changed setting value or configuration.

7. **Depending on the requested design for a complete REx 5xx terminal, leave the function active or reconfigure the function into the default configuration and set the setting restriction function out of operation to SettingRestrict = Open.**

27.2 Completing the test

Continue to test another function or complete the test by setting the test mode to off. Restore connections and settings to the original values, if they were changed for testing purpose.

28 Scheme communication logic for distance protection functions (ZCOM)

Prepare the terminal for verification of settings as outlined in section “Preparing for test” in this chapter.

Check the scheme logic during the secondary injection test of the impedance-measuring zones and the high-speed complementary zones. For details see the ordering sheets for each particular REO 517 terminal.

Activating the different zones verifies that the ZCOM-CS signal is issued from the intended zones. The ZCOM-CS signal from the independent tripping zone must have a tSendMin minimum time if permissive or blocking scheme logic are used.

Check the tripping function by activating the ZCOM-CR and ZCOM-CRG inputs with the overreaching zone used to achieve the ZCOM-CACC signal.

It is sufficient to activate the zones with only one type of fault with the secondary injection.

28.1 Testing permissive underreach

Procedure

1. **Activate carrier receive (ZCOM-CR) signal of the terminal.**
2. **Supply the relay with healthy conditions for at least two seconds.**
3. **Apply a fault condition within the permissive zone.**
4. **Check that correct trip outputs, external signals, and indication are obtained for the actual type of fault generated.**
5. **Check that other zones operate according to their zone timer and that the carrier send (ZCOM-CS) signal is obtained only for the zone configured to give the actual signal.**
6. **Deactivate the carrier receive (ZCOM-CR) signal of the terminal.**
7. **Check that the trip time complies with the zone timers and that correct trip outputs, external signals, and indication are obtained for the actual type of fault generated.**
8. **Activate carrier receive (ZCOM-CR) signal without any fault conditions and check that no trip is obtained.**

28.2 Testing permissive overreach

Procedure

1. **Activate the carrier receive (ZCOM-CR) signal of the terminal.**
2. **Supply the relay with healthy conditions for at least two seconds.**
3. **Apply a fault condition within the permissive zone.**
4. **Check that correct trip outputs, external signals, and indication are obtained for the actual type of fault generated.**
5. **Check that the other zones operate according to their zone timer and that the carrier send (ZCOM-CS) signal is obtained only for the zones that are configured to give the actual signal.**
6. **Deactivate the carrier receive (ZCOM-CR) signal of the terminal.**
7. **Supply the relay with healthy conditions for at least two seconds.**
8. **Apply a fault condition within the permissive zone.**
9. **Check that trip time complies with the zone timers and that correct trip outputs, external signals, and indication are obtained for the actual type of fault generated.**
10. **Activate carrier receive (ZCOM-CR) signal without any fault conditions and check that no trip is obtained.**

28.3 Testing blocking scheme

Procedure

1. **Deactivate the carrier receive (ZCOM-CR) signal of the terminal.**
2. **Supply the relay with healthy conditions for at least two seconds.**
3. **Apply a fault condition within the forward directed zone used for scheme communication tripping.**
4. **Check that correct trip outputs and external signals are obtained for the type of fault generated and that the operate time complies with the tCoord timer (plus relay-measuring time).**
5. **Check that the other zones operate according to their zone times and that a carrier send (ZCOM-CS) signal is only obtained for the reverse zone.**
6. **Activate the carrier receive (ZCOM-CR) signal of the terminal.**

7. **Apply a fault condition in the forward directed zone used for scheme communication tripping.**
8. **Check that the no trip from scheme communication occurs.**
9. **Check that trip time from the forward directed zone used for scheme communication tripping complies with the zone timer and that correct trip outputs, external signals, and indication are obtained for the actual type of fault generated.**

28.4 Completing the test

Continue to test another function or complete the test by setting the test mode to off. Restore connections and settings to the original values, if they were changed for testing purpose.

29 Setting group selector (GRP)

29.1 Verifying the settings

Prepare the terminal for verification of settings as outlined in section “Preparing for test” in this chapter.

Procedure

1. **Check the configuration of binary inputs that control the selection of active setting group.**
2. **Browse the ‘ActiveGroup’ menu to achieve information about the active setting group.**

   The ActiveGroup menu is located in the local HMI under:

   ServiceReport/ActiveGroup

3. **Connect the appropriate dc voltage to the corresponding binary input of the terminal and observe the information presented on the HMI display.**

   The displayed information must always correspond to the activated input.

4. **Check that corresponding output indicates the active group.**
5. **Continue to test another function or complete the test by setting the test mode to off.**

30 Single command (CD)

For the single command function block, it is necessary to configure the output signal to corresponding binary output of the terminal. The operation of the function is then checked from the local HMI by applying the commands with the MODE Off, Steady, or Pulse and by observing the logic statuses of the corresponding binary output.

Command control functions included in the operation of different built-in functions must be tested at the same time as their corresponding functions.

31 Sudden current change function (SCC)

Prepare the terminal for verification of settings as outlined in section “Preparing for test” in this chapter.

Ensure that the maximum continuous current of the terminal does not exceed four times its rated value.

31.1 Verifying the settings

Procedure

1. **Set Operation=Normal.**
2. **Set the test equipment to inject a phase to neutral current in the terminal with a value of 1,05 times the set value di/dt.**
3. **Inject the current check that the start signal SCC-START appears and the signal SCC-TRIP does not appear.**
4. **Measure the pulse length of the start signal SCC-START.**
5. **Compare the measured pulse length with the set value of the hold time t.**
6. **Reduce the current in increments of 2% and repeat current pick-up until operation is not obtained.**
7. **Compare the measured current with set value di/dt.**
8. **Switch off the fault current.**
9. **Set Operation=Backup**
10. **Repeat 2 and 3 and check that both the start signal SCC-START and the signal SCC-TRIP appears.**
11. **Switch off the fault current and set “Operation mode” in its normal operate position.**

31.2 Completing the test

Continue to test another function or complete the test by setting the test mode to off. Restore connections and settings to the original values, if they were changed for testing purpose.

32 Sudden voltage change function (SVC)

Prepare the terminal for verification of settings as outlined in section “Preparing for test” in this chapter.

32.1 Verifying the settings

Procedure

1. **Inject a voltage of 1,5 times the set operate value du/dt.**
2. **Switch off the voltage and check that the output signal SVC-START is activated.**
3. **Measure the pulse lenght of the start signal SVC-START.**
4. **Compare the measured pulse length with the set value of the hold time t.**
5. **Reduce the voltage drop in increments of 2% and repeat until operation is not obtained.**
6. **Compare the measured voltage drop with set value du/dt.**
7. **Activate the input signal SVC-VTSZ and check that the function is blocked.**
8. **Deactivate the input SVC-VTSZ and activate the signal SVC-BLOCK.**

   No SVC-START should appear.

32.2 Completing the test

Continue to test another function or complete the test by setting the test mode to off. Restore connections and settings to the original values, if they were changed for testing purpose.

33 Synchro-check and energising-check (SYRW)

This section contains instructions on how to test the synchro-check and energizing check.

Prepare the terminal for verification of settings as outlined in section “Preparing for test” in this chapter.

At periodical checks, the functions should preferably be tested with the used settings. To test a specific function, it might be necessary to change some setting parameters, for example:

- AutoEnerg = On/Off/DLLB/DBLL/Both
- ManEnerg = Off
- Operation = Off, On

The tests explained in the test procedures below describe the settings, which can be used as references during testing before the final settings are specified. After testing, restore the equipment to the normal or desired settings.

A secondary injection test set with the possibility to alter the phase angle by regulation of the resistive and reactive components is needed. Here, the phase angle meter is also needed. To perform an accurate test of the frequency difference, a frequency generator at one of the input voltages is needed.

Figure 23 shows the general test connection principle, which can be used during testing.

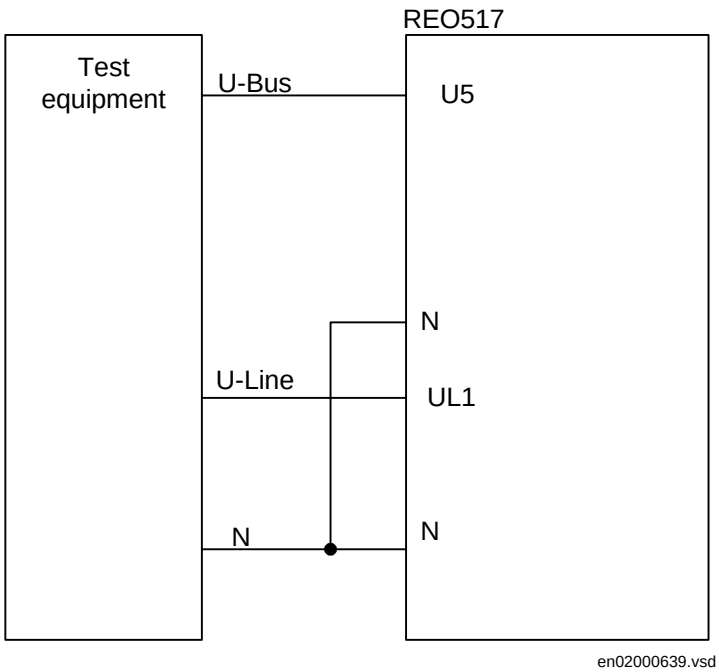

Figure 23: General test connection

33.1 Testing the synchrocheck

During test of the synchrocheck function, these voltage inputs are used:

U-line	UL1 voltage input on the terminal.
U-bus	U5 voltage input on the terminal

33.1.1 Testing the voltage difference

Set the voltage difference at 30% U1b on the HMI, and the test should check that operation is achieved when the voltage difference UDiff is lower than 30% U1b.

Table 13: Test settings for voltage difference

Parameter	Setting
Operation	On
PhaseShift	0 deg
URatio	1.00
AutoEnerg	Off
ManEnerg	Off
ManDBDL	Off
ULHigh	70% U1b
UBHigh	70% U1b
ULow	40% U1b
FreqDiff	0,05 Hz
PhaseDiff	45°
UDiff	30% U1b
tAutoEnerg	0.5 s
tManEnerg	0.5 s

The settings are located in the local HMI under:

Settings/Functions/Group n (n=1-4)/SynchroCheck

Test with UDiff = 0%

1. **Apply voltages U-line (UL1) = 80% U1b and U-Bus (U5) = 80% U1b, without any frequency or phase difference.**
2. **Check that the SYRW-AUTOOK and SYRW-MANOK outputs are activated.**
3. **The test can be repeated with different voltage values to verify that the function operates within UDiff <30%.**

Test with UDiff = 40%

1. **Increase the U-bus (U5) to 120% U1b, and the U-line (UL1) = 80% U1b.**
2. **Check that the two outputs are *NOT* activated.**

Test with UDiff = 20%, Uline < ULHigh

1. **Decrease the U-line (UL1) to 60% U1b and the U-bus (U5) to be equal to 80% U1b.**
2. **Check that the two outputs are *NOT* activated.**

Test with URatio=0.20

1. **Run the tests under procedures "Test with UDiff = 0%" on page 137, "Test with UDiff = 40%" on page 137 and "Test with UDiff = 20%, Uline < ULHigh" on page 138 but with U-bus voltages 5 times lower.**

Test with URatio=5.00

1. **Run the tests under procedures "Test with UDiff = 0%" on page 137, "Test with UDiff = 40%" on page 137 and "Test with UDiff = 20%, Uline < ULHigh" on page 138 but with U-line voltages 5 times lower.**

33.1.2 Testing the phase difference

The phase difference is set at 45° on the HMI, and the test should verify that operation is achieved when the PhaseDiff (phase difference) is lower than 45°.

Set these HMI settings:

Table 14: Test settings for phase difference

Parameter	Setting
Operation	On
PhaseShift	0 deg
URatio	1.00
AutoEnerg	Off
ManEnerg	Off
ManDBDL	Off
ULHigh	70% U1b
UBHigh	70% U1b
ULow	40% U1b
FreqDiff	0,05 Hz
PhaseDiff	45°

Parameter	Setting
UDiff	15% U1b
tAutoEnerg	0.5 s
tManEnerg	0.5 s

Test with PhaseDiff = 0°

1. **Apply voltages U-line (UL1) = 100% U1b and U-bus (U5) = 100% U1b, with a phase difference equal to 0° and a frequency difference that is lower than 50 mHz.**
2. **Check that the SYRW-AUTOOK and SYRW-MANOK outputs are activated.**

   The test can be repeated with other PhaseDiff values to verify that the function operates for values lower than the set ones. By changing the phase angle on U5 connected to U-bus, between +/- 45°. The user can check that the two outputs are activated for a PhaseDiff lower than 45°. It should not operate for other values. See Figure 24.

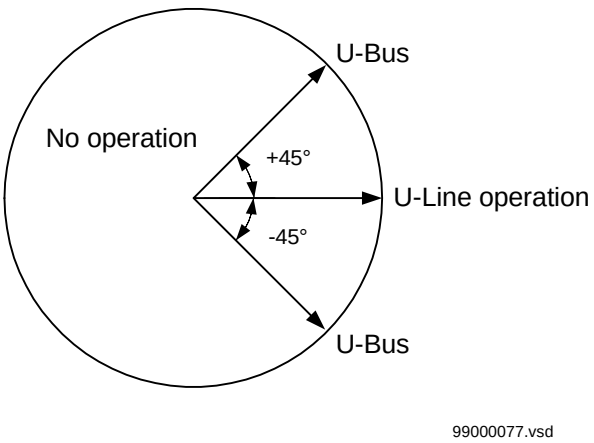

Figure 24: Test of phase difference.

3. **Apply a PhaseShift setting of 10 deg.**
4. **Change the phase angle between +55 and -35 and verify that the two outputs are activated for phase differences between these values but not for phase differences outside. See Figure 25.**

5. **Change the PhaseShift setting to 350 deg. Change the phase angle between +35 and -55 and verify as above.**

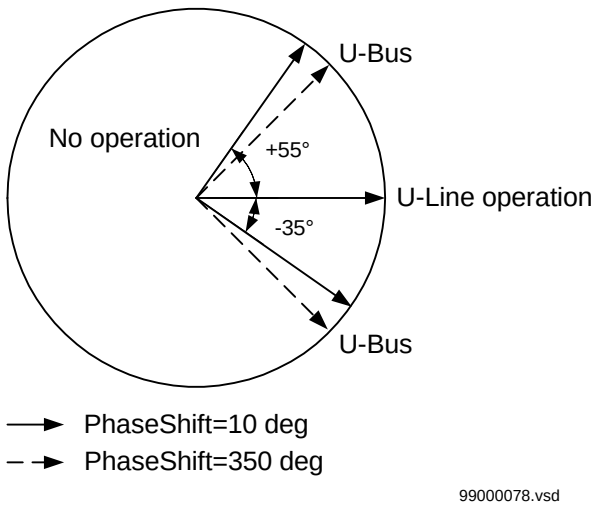

Figure 25: Test of phase difference.

33.1.3 Testing the frequency difference

The frequency difference is set at 50 mHz on the HMI, and the test should verify that operation is achieved when the FreqDiff frequency difference is lower than 50 mHz.

Use the same HMI setting as in section 33.1.2 "Testing the phase difference" on page 138.

Test with FreqDiff = 0 mHz

1. **Apply voltages U-Line (UL1) equal to 100% U1b and U-Bus (U5) equal to 100% U1b, with a frequency difference equal to 0 mHz and a phase difference lower than 45°.**
2. **Check that the SYRW-AUTOOK and SYRW-MANOK outputs are activated.**

Test with FreqDiff = 1Hz

1. **Apply voltage to the U-line (UL1) equal to 100% U1b with a frequency equal to 50 Hz and voltage U-bus (U5) equal to 100% U1b, with a frequency equal to 49 Hz.**

2. **Check that the two outputs are *NOT* activated.**

   The test can be repeated with different frequency values to verify that the function operates for values lower than the set ones. If the FREJA program, *Test of synchronizing relay*, is used the frequency can be changed continuously.

Note!

A frequency difference also implies a floating mutual-phase difference. So the SYRW-AUTOOK and SYRW-MANOK outputs might NOT be stable, even though the frequency difference is within set limits, because the phase difference is not stable!

33.2 Testing the energizing check

During test of the energizing check function, these voltage inputs are used:

U-line	UL1 voltage input on the terminal.
U-bus	U5 voltage input on the terminal

33.2.1 Testing the dead line live bus (DLLB)

The test should verify that the energizing function operates for a low voltage on the U-Line and for a high voltage on the U-bus. This corresponds to an energizing of a dead line to a live bus.

The settings in table 15 "Test settings for DLLB" can be used during the test if the final setting is not determined.

Table 15: Test settings for DLLB

Parameter	Setting
Operation	On
PhaseShift	0 deg
URatio	1.00
AutoEnerg	DLLB
ManEnerg	DLLB
ManDBDL	Off
ULHigh	80% U1b

Parameter	Setting
UBHigh	80% U1b
ULow	40% U1b
FreqDiff	0,05 Hz
PhaseDiff	45°
UDiff	15% U1b
tAutoEnerg	0.5 s
tManEnerg	0.5 s

1. **Apply a single-phase voltage 100% U1b to the U-bus (U5), and a single-phase voltage 30% U1b to the U-line (UL1).**
2. **Check that the SYRW-AUTOOK and SYRW-MANOK outputs are activated.**
3. **Increase the U-Line (UL1) to 60% U1b and U-Bus(U5) to be equal to 100% U1b. The outputs should *NOT* be activated.**

   The outputs should *NOT* be activated.

4. **The test can be repeated with different values on the U-Bus and the U-Line.**

33.2.2 Testing the dead bus live line (DBLL)

The test should verify that the energizing function operates for a low voltage on the U-bus and for a high one on the U-line. This corresponds to an energizing of a dead bus from a live line.

1. **Change the HMI settings AutoEnerg and ManEnerg to DBLL.**
2. **Apply a single-phase voltage of 30% U1b to the U-bus (U5) and a single-phase voltage of 100% U1b to the U-line (UL1).**
3. **Check that the SYRW-AUTOOK and SYRW-MANOK outputs are activated.**
4. **Decrease the U-line to 60% U1b and keep the U-bus equal to 30% U1b.**

   The outputs should *NOT* be activated.

5. **The test can be repeated with different values on the U-bus and the U-line.**

33.2.3 Testing both directions (DLLB or DBLL)

1. **Change the HMI settings AutoEnerg and ManEnerg to Both.**
2. **Apply a single-phase voltage of 30% U1b to the U-line (UL1) and a single-phase voltage of 100% U1b to the U-bus (U5).**
3. **Check that the “SYRW-AUTOOK” and “SYRW-MANOK” outputs are activated.**
4. **Change the connection so that the U-line (UL1) is equal to100% U1b and the U-bus (U5) is equal to 30% U1b.**

   The outputs should still be activated.

5. **The test can be repeated with different values on the U-bus and the U-line.**
6. **Restore the equipment to normal or desired settings.**

33.2.4 Testing the dead bus dead line (DBDL)

The test should verify that the energizing function operates for a low voltage on both the U-bus the U-line, i.e closing of the breaker in a non energised system.

1. **Set AutoEnerg to Off and ManEnerg to DBLL.**
2. **Set ManDBDL to On.**
3. **Apply a single-phase voltage of 30% U1b to the U-bus (U5) and a single-phase voltage of 30% U1b to the U-line (UL1).**
4. **Check that the SYRW-MANOK output is activated.**
5. **Increase the U-bus to 80% U1b and keep the U-line equal to 30% U1b.**

   The outputs should *NOT* be activated.

6. **Repeat the test with ManEnerg set to DLLB and Both, and different values on the U-bus and the U-line.**

33.3 Completing the test

Continue to test another function or complete the test by setting the test mode to off. Restore connections and settings to the original values, if they were changed for testing purpose.

34 Thermal phase overload protection (THOL)

Prepare the terminal for verification of settings as outlined in section “Preparing for test” in this chapter.

Check that the input logical signal THOL-BLOCK is logical zero and note on the local HMI that the logical signal THOL-TRIP, THOL-START and THOL-ALARM are equal to the logical 0. Logical signals for thermal overload protection are available under menu tree:

ServiceReport/Functions/ThermOverLoad/FuncOutputs

34.1 Verifying the settings

34.1.1 Testing the protection without external temperature compensation (NonComp)

Procedure

1. **Quickly set the measured current (fault current) in one phase to about 300% of I1b (to minimise the trip time), and switch off the current with the switch.**
2. **Reset the thermal memory under menu tree:**

   Test/ThermReset

3. **Switch on the fault current and read the presented temperature:**

   ServiceReport/Functions/ThermOverload/ThermOverload/T Line

4. **Check the Alarm limit during injection.**

   Measure the signal THOL-ALARM until it appears on the corresponding binary output or on the local HMI unit.

5. **Compare the measured “T Line” readings with the setting of TAlarm.**
6. **Check the Trip limit during injection.**

   Measure the signal THOL-TRIP until it appears on the corresponding binary output or on the local HMI unit. Note, the signal is a puls of 150 ms.

7. **Compare the measured “T Line” readings with the setting of TTrip.**

8. **Measure the trip time of the THOL protection.**

   Use the THOL-TRIP signal from the configured binary output to stop the timer.

9. **Compare the measured trip time with the setting according to the formula.**
10. **Activate the THOL-BLOCK binary input.**

    The signals THOL-ALARM, THOL-START and THOL-TRIP should disappear.

11. **Reset the THOL-BLOCK binary input.**
12. **Switch off the fault current.**
13. **Check the reset limit (TdReset).**

    Measure the signal THOL-START until it disappears on the corresponding binary output or on the local HMI unit, take the “T Line” readings and compare with the setting of TTrip - TdReset.

14. **Reset the thermal memory.**

34.1.2 Testing the protection with external temperature compensation (Comp)

Procedure

1. **Feed the mA-Input with a current corresponding to the ambient temperature 10C°.**
2. **Follow the testing procedure as for the protection without external temperature compensation point 1 to 14 above.**
3. **Repeat test 2 with the mA-Input current corresponding to the ambient temperature 30C°.**

34.2 Completing the test

Continue to test another function or complete the test by setting the test mode to off. Restore connections and settings to the original values, if they were changed for testing purpose.

35 Time delayed phase and residual overcurrent protection (TOC1)

Prepare the terminal for verification of settings as outlined in section “Preparing for test” in this chapter.

To verify the settings the following fault types should be tested:

- One for a phase to phase fault
- One for a phase-to-earth fault

Ensure that the maximum continuous current of the terminal does not exceed four times its rated value.

35.1 Verifying the settings

35.1.1 Time delayed phase overcurrent

Procedure

1. **Temporarily set tP to zero.**
2. **Inject a phase current in the terminal with start below the setting value.**
3. **Slowly increase the injected current (measured current) in the phase until the trip signal TOC1-TRP appears.**
4. **Switch off the fault current.**

   Observe the maximum permitted overloading of the current circuits in the terminal.

5. **Compare the measured operating current with the set value IP>.**
6. **Restore the tP setting.**
7. **Set the fault current to about 1.5 times the measured operating current.**
8. **Switch on the fault current and measure the operating time of the TOC1 protection.**
9. **Compare the measured time with the set value tP.**

35.1.2 Time delayed residual overcurrent (non-dir.)

Procedure

1. **Temporarily set tN to zero.**
2. **Inject a phase current in the terminal with start below the setting value.**
3. **Increase the injected residual current (measured current) in the L*n* phase (n=1, 2) until the trip signal TOC1-TRN appears.**
4. **Switch off the fault current.**

   Observe the maximum permitted overloading of the current circuits in the terminal.

5. **Compare the measured operating current with the set value IN>.**
6. **Restore the tN setting.**
7. **Set the fault current to about 1.5 times the measured operating current.**
8. **Switch on the fault current and measure the operating time of the TOC1 protection.**
9. **Compare the measured time with the set value tN.**

35.2 Completing the test

Continue to test another function or complete the test by setting the test mode to off. Restore connections and settings to the original values, if they were changed for testing purpose.

36 Time delayed overvoltage protection (TOV)

Prepare the terminal for verification of settings as outlined in section “Preparing for test” in this chapter.

To verify the settings the following fault types should be tested:

- One for a single-phase voltage feeding.

36.1 Verifying the settings

36.1.1 Time delayed phase overvoltage protection

Procedure

1. **Apply the single phase voltage with start below the setting value.**
2. **Slowly increase the voltage until the TOV--STPE signal appears.**
3. **Note the operate value and compare it with the set value.**
4. **Switch off the applied voltage.**
5. **Set and apply about 20% higher voltage than the measured operate value for one-phase.**
6. **Measure the time delay for the TOV--TRPE signal and compare it with the set value.**
7. **Repeat point 1 to 6 for the other phase, if applicable.**

36.2 Completing the test

Continue to test another function or complete the test by setting the test mode to off. Restore connections and settings to the original values, if they were changed for testing purpose.

37 Time delayed undervoltage protection (TUV) for two sections (TUV1)

Prepare the terminal for verification of settings as outlined in section “Preparing for test” in this chapter.

To verify the settings the following fault type should be tested:

- Decrease of voltage in one phase

37.1 Verifying the settings

Procedure

1. **Supply the terminal with three-phase voltages to their rated values.**
2. **Slowly decrease the voltage in one of the phases, until the TUV-START signal appears.**
3. **Note the operate value and compare it with the set value.**
4. **Increase the measured voltage to rated operate conditions.**
5. **Instantaneously decrease the voltage in one-phase to a value about 20% lower than the measured operate value.**
6. **Measure the time delay for the TUV-TRIP signal, and compare it with the set value.**
7. **Repeate the measurements 2 to 6 for the other phase if apli-cable.**

37.2 Completing the test

Continue to test another function or complete the test by setting the test mode to off. Restore connections and settings to the original values, if they were changed for testing purpose.

38 Trip logic (TR)

Prepare the terminal for verification of settings as outlined in section “Preparing for test” in this chapter.

The function is tested functionally together with other protection functions (distance protection ZnRW, overcurrent protection HSOC/IOC or TOC--, etc.) within the REx 5xx terminals. It is recommended to test the function together with the autoreclosing function, when built into the terminal or when a separate external unit is used for the reclosing purposes.

38.1 Completing the test

Continue to test another function or complete the test by setting the test mode to off. Restore connections and settings to the original values, if they were changed for testing purpose.

39 Two step definite and inverse time-delayed residual overcurrent protection (TEF1 and TEF2)

Prepare the terminal for verification of settings as outlined in section “Preparing for test” in this chapter.

Normally, the test of the earth-fault overcurrent protection is made in conjunction with the testing of the distance protection functions, using the same multiphase test-set.

It might be necessary to block the impedance measuring zones, depending on the zone settings, to prevent operation of the impedance function when checking the earth-fault protection.

39.1 Verifying the settings of the directional earth-fault overcurrent protection

Procedure

1. **Set the logical input signals to logical 0 and note on the local HMI that the TEFn-TRIP and the TEFn-TRSOTF signal is not activated (= logical 0).**

   Values of the logical signals belonging to the time delayed residual overcurrent protection are available under menu tree:

   ServiceReport/Functions/EarthFault/TEFn

2. **Set the angle of UL1 to 0 and the angle of UL2 to 180. Set the amplitude of UL1 to be <2% of Ub, less than the amplitude of UL2.**
3. **Set the angle of IL1 to -65 (+295). Set the amplitude IL2 to 0 A and the angle to 0. Increase the current IL1 until operation is obtained on TEFn-STFW.**
4. **Check that the operate current of the forward directional element is equal to the IN> Dir setting.**

   The IN> Dir function activates the TEFn-STFW output.

5. **Check with angles j = 20° and 110° that the measuring element operates when IN · cos (65° - j) >= IN> Dir.**
6. **Reverse the polarising voltage (j = 115°) and check that the operate current of the reverse directional element is 0.6 · IN> Dir.**

   The function activates the TEFn-STRV output.

7. **When independent time delay (definite) is selected, check the operate time of the tLow timer by injecting a current two times the set IN>Low operate value.**

   When inverse time delay is selected, check the operate time at three points of the inverse characteristic. The formulas for operate time for different types of inverse time delay curves are shown in table 16.Operate time formulas

Table 16: Operate time formulas

Characteristics	Operate time (s)
Normal inverse	$t = \frac{0.14}{I^{0.02} - 1} \cdot k$ (Equation 3)
Very inverse	$t = \frac{13.5}{I - 1} \cdot k$ (Equation 4)
Extremely inverse	$t = \frac{80}{I^{2} - 1} \cdot k$ (Equation 5)
RI inverse	$t = \frac{1}{0,339 - ((0,236)/I)} \cdot k$ (Equation 6)

Where:

I	is the quota of actual current / I>Inv
k	is a time multiplying factor, settable in the range of 0.05 to 1.10

8. **Activate the TEFn-BC input to check the function of the switch-onto-fault logic.**
9. **Check that the TEFn-TRSOTF output is activated with a 300 ms time delay when injecting a current two times the set IMin operate value in forward direction.**
10. **Set the phase angle of the polarising voltage to j =115° and check that the directional current function and the switch-onto-fault logic gives no operation when the current is in the reverse direction.**

11. **Connect the rated DC voltage to the TEFn-BLKTRLS configured binary input and switch on the fault current.**

    No TEFn-TRSOTF nor TEFn-TRLS signal should appear. But the output TEFn-STLS shall be activated.

12. **Switch off the fault current.**
13. **Connect the rated DC voltage to the TEFn-BLOCK configured binary input and switch on the fault current.**

    No TEFn-STLS, TEFn-STFW nor TEFn-STRV should appear.

14. **Switch off the fault current.**
15. **Check the operate current for the high current step IN>High by injecting a current in the forward direction.**

    Operation activates the TEFn-STHS signal.

16. **When the independent time-delay is selected, check the operate time on TEFn-TRHS for the timer tHigh by injecting a current value of two times the set value of IN>High.**
17. **Connect the rated DC voltage to the TEFn-BLKTRHS configured binary input and switch on the fault current.**

    No TEFn-TRHS should appear.

18. **Switch off the fault current.**

39.2 Verifying the settings of the nondirectional earth-fault overcurrent protection

Procedure

1. **The nondirectional current step and the SOTF-function are tested in principle as set out in points1 - 6 and 7 - 14 above without applaying the polarising voltage.**

39.3 Completing the test

Continue to test another function or complete the test by setting the test mode to off. Restore connections and settings to the original values, if they were changed for testing purpose.

40 Two step time delayed phase overcurrent protection (TOC2)

Prepare the terminal for test as outlined in section “Preparing for test” in this chapter.

Ensure that the maximum continuos current of a terminal does not exceed four times its rated value, if the measurement od the operating characteristics runs under constant voltage conditions.

To verify the settings the following fault type should be tested:

- One for a phase-to-earth fault

40.1 Measuring the operate and time limit for set values

40.1.1 Measuring the operate limit of the low step overcurrent protection

Procedure

1. **Inject a phase current slightly smaller than the functional value I>Low.**
2. **Increase the current slowly and check the function value by observing when the signal TOC2-STLS appears.**
3. **Compare the result of the measurement with the set value.**

40.1.2 Measuring the definite time delay of the low set stage

1. **Set a current 1.5 times I>Low on the injection test equipment.**
2. **Switch the current on and compare the operation time on TOC2-TRLS with the set value tLow.**

   The operate time shall be tRelay+tLow.

40.1.3 Measuring the inverse time delay of the low set stage

1. **Set temporarily tLow = 0.000 s.**

   If I>Low is set higher than I>Inv, check that there is no trip signal TOC2-TRLS when the current is less than I>Low.

2. **Check the time delay at two points of the inverse time curve.**

   Check with the current I>Low or 2·I>Inv (the highest value of these two) and the current that according to the inverse time curve corresponds to tMin.

3. **Increase the current 10% and check that the operation time is equal to tMin.**
4. **Set tLow to the correct value and check with a high current that the operation time is equal to tMin+tLow.**

40.1.4 Measuring the operate limit of the high step overcurrent protection

1. **Set temporarily tHigh=0.000 s.**
2. **Inject a phase current slightly smaller than the operation value I>High.**
3. **Increase the current slowly and check the operation value by observing when the signal TOC2-TRHS appears.**
4. **Compare the result of the measurement with the set value.**
5. **Set tHigh to the correct value.**
6. **Set a current 1.5 times I>High on the injection test equipment**
7. **Switch the current on and compare the operation time with the set value tHigh.**

40.2 Completing the test

Continue to test another function or complete the test by setting the test mode to off. Restore connections and settings to the original values, if they were changed for testing purpose.

41 Unbalance protection for capacitor banks (TOCC)

Prepare the terminal for verification of settings as outlined in section “Preparing for test” in this chapter.

41.1 Verifying the settings

Procedure

1. **Check that the input logical signal TOCC-BLOCK is logical zero and note on the local HMI that the TOCC--TRLS and TOCC-TRHS logical signal are equal to the logical 0.**

   Logical signals for unbalance protection for capacitor banks are available under menu tree:

   Service Report/Functions/CapUnbalance/FuncOutputs

2. **Quickly set the measured current (fault current) connected to I5 to about 110% of the setting (I>Low) operating current, and switch off the current with the switch.**

   Observe the maximum permitted overloading of the current circuits in the terminal.

3. **Switch on the fault current and measure the operating time of the TOCC protection.**

   Use the TOCC-TRLS signal from the configured binary output to stop the timer.

4. **Compare the measured time with the set value tLow.**
5. **Activate the TOCC-BLOCK binary input.**
6. **Switch on the fault current (110% of the setting) and wait longer than the set value tLow.**

   No TOCC-TRLS signal should appear.

7. **Switch off the fault current.**
8. **Reset the TOCC-BLOCK binary input.**
9. **Quickly set the measured current (fault current) in same phase to about 90% of the setting (I>Low) operating current, and switch off the current with the switch.**

10. **Switch on the fault current and wait longer than the set value tLow.**

    No TOCC-TRLS signal should appear.

11. **Switch off the fault current.**
12. **Check the (I>High) and (tHigh) in the same way as Low stage above, and use TOCC-TRHS signal to stop the timer.**

41.2 Completing the test

Continue to test another function or complete the test by setting the test mode to off. Restore connections and settings to the original values, if they were changed for testing purpose.

Chapter 12 Verifying the internal configuration

About this chapter

The aim of this chapter is to verify that the internal communications and output signals are according to the specification and normal protection praxis. This means that all included protection functions must be in operation.

1 Overview

Before start of this process, all individual devices that are involved in the fault clearance process must have been tested as individuals and set in operation. The breaker must be ready for an open-close-open cycle.

The shaping of the test process is dependent on the complexity of the design of the switchyard. Hereby follows some items which could be used as guidelines.

2 Testing the interaction of the distance protection

This procedure describes how to test the interaction of the distance protection zone 1 at phase L1-earth fault in forward direction. It is recommended that all other distance protection zones and other protection functions are tested in a similar way. The test must be done without the test switch in order to verify the interaction between the terminal and surrounding equipment. Make sure that all personnel is informed, also in remote station.

Procedure

1. **Make sure that the protection terminal and fitting breaker(s) to be tested are in service.**
2. **Connect the test equipment to the terminal.**
3. **Set the test equipment so that the impedance present to the relay is half the set value.**
4. **Energise the protection terminal and evaluate the result i.e.**
   - Check that correct trip has been accomplished according to configuration and philosophy.
   - Check that all binary output signals that should be activated have been activated.
   - Check that all other protection functions that should be activated by this type of fault have been activated.
   - Check that no other protection functions that should not be activated have not been activated.
   - Check whenever applicable that the disturbance report, event list and disturbance recorder have been activated and performed correct information.

Chapter 13 Testing the protection system

About this chapter

This chapter describes how to verify the conformity of the protection system without the protected object energised.

1 Overview

Before start of this process, all individual devices that are involved in the fault clearance process of the protected object must have been tested as individuals and set in operation. The breaker must be ready for an open-close-open cycle.

Scheme performance test is the final test that should be carried out before the protected object is taken into service.

Due to the complexity in combination with already performed tests, it is not necessary to test all protection functions and all fault types in this process. The most important protection functions in the terminal for single line to earth fault and phase-phase fault could be used for the test.

The shaping of the test process is dependent on the complexity of the design of the switchyard. Hereby follows some items which could be used as guidelines.

2 Testing the interaction of the distance protection

This procedure describes how to test the interaction of distance protection zone 1 at a transient phase L1-L2 fault in forward direction. The test must be done without the test switch in order to verify the interaction between the terminal and surrounding equipment. Make sure that involved personnel is informed also in remote station.

Procedure

1. **Make sure that the protection terminal and related breaker(s) to be tested are in service.**
2. **Connect the test equipment to the terminal.**
3. **Set the test equipment so that the impedance present to the relay is half the set value of zone 1.**
4. **Prepare a transient fault sequence.**
5. **Simulate the condition for the synchro-check as for live bus and dead line.**
6. **Energise the protection terminal and evaluate the result i.e.**
   - Check that correct trip has been accomplished according to configuration and philosophy.
   - Check that the autoreclosure have made an reclosing of the protected object.
   - Check that activation of all other external devices have been accomplished according to configuration and protection philosophy.
     - Check, whenever applicable, that carrier receive signal has arrived at remote end.
     - Check, whenever applicable, that start of external disturbance recorder has been accomplished.
     - Check that event and alarm signals has been given etc.
   - Check that no abnormal events have occurred.
   - Notice the AR dead time and do corrections if needed.
7. **Make a new fault case for permanent fault and repeat the steps 1 - 6 above.**

   Specially note that a permanent trip should occur after the last attempt according to the programming of the AR.

   It is recommended to repeat the procedure 1 - 6 for a protection function which detects earth-faults i.e. residual overcurrent protection.

Chapter 14 Checking the directionality

About this chapter

This chapter describes how to check that the directionality is correct for each directional dependent functions. The scope is also to verify that all analogue values are correct. This must be done with the protection system in operation, the protected object energised and the load current above the min operation current of the terminal.

1 Overview

Before start of this process, all individual devices that are involved in the fault clearance process of the protected object must have been tested as individuals and set in operation. The breaker must be ready for an open-close-open cycle.

As a condition for the test, the following must be fulfilled:

- The magnitude of the load current must be more than 20% of the terminal nominal rate current.
- The load impedance must have an angle $-15° < \varphi < 115°$ or $165° < \varphi < 295°$.

The directionality test is performed when the protected object is energized and certain minimum load current with known direction is floating through the protected object.

Since the same directional element is used for both distance protection and phase overcurrent protection it is not necessary to test the direction of the phase overcurrent function if the distance function is tested and contra wise.

The design of the test procedure depends on type of protection function to be tested. Here follows some items which could be used as guidelines.

2 Testing the directionality

A directional test must always be carried out before the terminal is put into service. Information on the power direction is obtained from the menu:

Service Report/Functions/Impedance/General/ImpDirection

Procedure

1. **Make sure that all control and protection functions that are belonging to the object that are going to be energised are tested and set in operation**
2. **Check that the load current will be more than 20% of the terminal nominal rate current.**

   After energizing the line, the local HMI displays if the current direction in each phase-to-phase measuring loop is in forward or reverse direction, relative to the direction of zone 1. For forward direction the display indicates:

   - L1-L2 = Forward

   For reverse direction of the measuring loop, the display shows:

   - L1-L2 = Reverse

   The actual values of the current and voltage phasors, as seen by the distance protection function, are available when the optional fault location function is included in the terminal. Phasors, which also can be used for the directional test, are available on the HMI under the menu:

   Service Report/Phasors/Primary (Secondary)

Chapter 15 Fault tracing and repair

About this chapter

This chapter describes how to carry out fault tracing and eventually, a change of circuit board.

1 Fault tracing

1.1 Using information on the local HMI

If an internal fault has occurred, the local HMI displays information under:

TerminalReport
SelfSuperv

Under these menus the indications of eventual internal failure (serious fault) or internal warning (minor problem) are listed.

Shown as well, are the indications regarding the faulty unit according to table 17.

Table 17: HMI information

HMI information	Signal name	Activates summary signal	Description
InternFail	INT--FAIL		Internal fail summary
Intern Warning	INT--WARNING		Internal warning summary
CPU-modFail	INT--CPUFAIL	INT--FAIL	Main processing module failed
CPU-modWarning	INT--CPUWARN	INT--WARNING	Main processing module warning (failure of clock, time synch., fault locator or disturbance recorder)
ADC-module	INT--ADC	INT--FAIL	A/D conversion module failed
Slotnn-XXXyy	INT--IOyy	INT--FAIL	I/O module yy failed
Real Time Clock	INT--RTC	INT--WARNING	Internal clock is reset - Set the clock
Time Sync	INT--TSYNC	INT--WARNING	No time synchronisation

Also the internal signals, such as INT--FAIL and INT--WARNING can be connected to binary output contacts for signalling to a control room.

In the Terminal Status - Information, the present information from the self-supervision function can be viewed. Indications of failure or warnings for each hardware module are provided, as well as information about the external time synchronisation and the internal clock. All according to table 18. Loss of time synchronisation can be considered as a warning only. The REx 5xx terminal has full functionality without time synchronisation.

1.2 Using front-connected PC or SMS

- Self-supervision summary = INT--FAIL and INT--WARNING
- CPU-module status summary = INT--CPUFAIL and INT--CPUWARN

When an internal fault has occurred, extensive information can be retrieved about the fault from the list of internal events. The list is available in the TERM-STS Terminal Status part of the CAP tool. This time-tagged list has information with the date and time of the last 40 internal events.

The internal events in the list do not only refer to faults in the terminal, but also to other activities, such as change of settings, clearing of disturbance reports and loss of external time synchronisation

The following events are logged as Internal events:

Table 18: Internal events

Event message	Description	Set/reset event
INT--FAILOff	Internal fail status	Reset event
INT--FAILOn		Set event
INT--WARNINGOff	Internal warning status	Reset event
INT--WARNINGOn		Set event
INT--CPUFAILOff	Main processing module fatal error status	Reset event
INT--CPUFAILOn		Set event
INT--CPUWARNOff	Main processing module non-fatal error status	Reset event
INT--CPUWARNOn		Set event
INT--ADCOff	A/D conversion module status	Reset event

Event message	Description	Set/reset event
INT--ADCOn		Set event
INT--IOnOff	In/Out module No. n status	Reset event
INT--IOn On		Set event
INT--RTC Off	Real Time Clock (RTC) status	Reset event
INT--RTC On		Set event
INT--TSYNC Off	External time synchronisa-tion status	Reset event
INT--TSYNC On		Set event
DREP-MEMUSED On	>80% of the disturbance recording memory used	Set event
SETTING CHANGED	Any settings in terminal changed	
DISTREP CLEARED	All disturbances in Distur-bance report cleared	

The events in the internal event list are time tagged with a resolution of 1 ms.

This means that when using the PC for fault tracing, it provides information on the:

- Module that should be changed.
- Sequence of faults, if more than one unit is faulty.
- Exact time when the fault occurred.

2 Repair instruction

If a module in any REx 5xx terminal needs to be repaired, the whole terminal can be removed and sent to ABB.

Warning!

Never disconnect a secondary connection of current transformer circuit without short-circuiting the transformer's secondary winding. Operating a current transformer with the secondary winding open will cause a massive potential build-up that may damage the transformer and may cause injuries to humans.

Warning!

Never connect or disconnect a wire and/or a connector to or from a terminal during normal service. Hazardous voltages and currents are present that may be lethal. Operation may be disrupted and terminal and measuring circuitry may be damaged.

An alternative is to open the terminal and send only the faulty circuit board to ABB for repair. When a printed circuit board is sent to ABB, it must always be placed in a metallic, ESD-proof, protection bag. The user can also purchase separate modules for replacement.

Note!

Strictly follow the company and country safety regulations.

Caution!

Always use a conductive wrist strap connected to protective earth when replacing modules. Electrostatic discharge (ESD) may damage the module and terminal circuitry.

Most electronic components are sensitive to electrostatic discharge and latent damage may occur. Please observe usual procedures for handling electronics and also use an ESD wrist strap. A semi-conducting layer must be placed on the workbench and connected to earth.

Disassemble and reassemble the REx 5xx terminal accordingly:

1. Switch off the dc supply.
2. Short-circuit the current transformers and disconnect all current and voltage connections from the terminal.
3. Disconnect all signal wires by removing the female connectors.
4. Disconnect the optical fibres.
5. Unscrew the main back plate of the terminal.
6. If the transformer module is to be changed — unscrew the small back plate of the terminal.
7. Pull out the faulty module.
8. Check that the new module has correct identity number.
9. Check that the springs on the card rail have connection to the corresponding metallic area on the circuit board when the new module is inserted.
10. Reassemble the terminal.

If the REx 5xx terminal has the optional increased measuring accuracy, a file with unique calibration data for the transformer module is stored in the Main processing module. Therefore it is not possible to change only one of these modules with maintained accuracy.

3 Maintenance

The REx 5xx terminal is self-supervised. No special maintenance is required.

Instructions from the power network company and other maintenance directives valid for maintenance of the power system must be followed.