Application manual

Protect^{IT} Breaker control terminal
REB 551-C2*2.5

Application manual

Breaker control terminal
REB 551-C2*2.5

About this manual

Document No: 1MRK 505 112-UEN
Issued: December 2006
Revision: B

© Copyright 2006 ABB. All rights reserved.

COPYRIGHT

WE RESERVE ALL RIGHTS TO THIS DOCUMENT, EVEN IN THE EVENT THAT A PATENT IS ISSUED AND A DIFFERENT COMMERCIAL PROPRIETARY RIGHT IS REGISTERED. IMPROPER USE, IN PARTICULAR REPRODUCTION AND DISSEMINATION TO THIRD PARTIES, IS NOT PERMITTED.

THIS DOCUMENT HAS BEEN CAREFULLY CHECKED. HOWEVER, IN CASE ANY ERRORS ARE DETECTED, THE READER IS KINDLY REQUESTED TO NOTIFY THE MANUFACTURER AT THE ADDRESS BELOW.

THE DATA CONTAINED IN THIS MANUAL IS INTENDED SOLELY FOR THE CONCEPT OR PRODUCT DESCRIPTION AND IS NOT TO BE DEEMED TO BE A STATEMENT OF GUARANTEED PROPERTIES. IN THE INTERESTS OF OUR CUSTOMERS, WE CONSTANTLY SEEK TO ENSURE THAT OUR PRODUCTS ARE DEVELOPED TO THE LATEST TECHNOLOGICAL STANDARDS. AS A RESULT, IT IS POSSIBLE THAT THERE MAY BE SOME DIFFERENCES BETWEEN THE HW/SW PRODUCT AND THIS INFORMATION PRODUCT.

Manufacturer:

ABB Power Technologies AB
Substation Automation Products
SE-721 59 Västerås
Sweden
Telephone: +46 (0) 21 34 20 00
Facsimile: +46 (0) 21 14 69 18
www.abb.com/substationautomation

Contents

Chapter Page

Chapter 1 Introduction 1

Introduction to the application manual 2
About the complete set of manuals for a terminal 2
About the application manual 2
Intended audience 3
General 3
Requirements 3
Related documents 3
Revision notes 3
Glossary 4

Chapter 2 General 11

Features 12
Functions 13
Application 14
Design 15
Requirements 16
General 16
Voltage transformers 16
Current transformers 16
Classification 16
Conditions 17
Fault current 17
Cable resistance and additional load 17
Current transformer requirements for CTs according to other standards 18
Serial communication 20
SPA 20
LON 20
IEC 870-5-103 20
Terminal identification and base values 21
Application 21
Calculations 21
Example 1 22
Example 2 24

Chapter 3 Common functions 27

Real-time clock with external time synchronzation (TIME) 28
Application 28
Functionality 28
Calculations 28
Four parameter setting groups (GRP) 30

Contents

Application 30
Functionality 30
Design 31
Setting restriction of HMI (SRH) 32
Application 32
Functionality 32
I/O system configurator (IOP) 34
Application 34
Functionality 34
I/O position 34
Configuration 35
Configurable logic blocks (CL1) 36
Application 36
Application 36
Functionality 36
Inverter (INV) 36
Controllable gate (GT) 37
OR 37
AND 38
Timer 39
Timer settable through HMI/SMS/PST 42
Pulse 43
Exclusive OR (XOR) 44
Set-Reset (SR) 45
Set-Reset with/without memory (SM) 46
Calculations 47
Self supervision with internal event recorder (INT) 49
Application 49
Functionality 49
Blocking of signals during test (BST) 53
Functionality 53

Chapter 4 Power system supervision 55

Dead line detection (DLD) 56
Application 56
Design 56
Calculations 57
Setting instructions 57

Chapter 5 Secondary system supervision 59

Fuse failure supervision (FUSE) 60
Application 60
Functionality 60
Zero sequence 60
Logic 62
Calculations 63
Zero sequence function 63
Setting of zero sequence voltage 3U0> 63

Contents

Setting of zero sequence current 3I0< 63

Chapter 6 Control 65

Synchrocheck and energizing check (SYN) 66
Application 66
Synchrocheck, general 66
Synchrocheck, single circuit breaker 67
Energizing check, general 68
Voltage selection, single circuit breaker 69
Voltage connection for a single bus and single bay 70
Voltage selection for a double bus and single bay 71
Functionality 72
Single circuit breaker 72
Synchrocheck 72
Voltage selection 75
Calculations 76
Settings for single circuit breaker 76
Operation 76
Input phase 76
UMeasure 76
PhaseShift 77
URatio 77
USelection 77
AutoEnerg and ManEnerg 77
ManDBDL 77
UHigh and ULow 77
FreqDiff, PhaseDiff and UDiff 77
VTConnection 77
tSync 78
Autorecloser (AR) 79
Application 79
Functionality 81
AR operation 81
Start and control of the auto-reclosing 81
Extended AR open time, shot 1 81
Long trip signal 82
Reclosing programs 82
Blocking of a new reclosing cycle 84
Reclosing checks and Reclaim timer 84
Pulsing of CB closing command 85
Transient fault 85
Unsuccessful signal 85
Permanent fault 85
Automatic confirmation of programmed reclosing attempts 85
Calculations 86
Configuration and setting 86
Recommendations for input signals 86
Recommendations for output signals 87
Settings 88

Contents

Chapter 7 Logic 91

Tripping logic (TR) 92
Application 92
Functionality 93
Design 93
Three-phase front logic 94
Phase segregated front logic 94
Additional logic for 1ph/3ph operating mode 95
Additional logic for 1ph/2ph/3ph operating mode 96
Final tripping circuits 97
Calculations 98
Event function (EV) 99
Application 99
Functionality 99
Design 99
General 99
Double indication 100
Communication between terminals 100
Calculations 101

Chapter 8 Monitoring 103

Disturbance report 104
Application 104
Requirement of trig condition for disturbance report 104
Functionality 104
Disturbance information 105
Indications 106
Event recorder 106
Fault locator 106
Trip values 106
Disturbance recorder 106
Recording times 106
Analog signals 107
Binary signals 108
Trigger signals 108
Calculations 109
Settings during normal conditions 109
Operation 110
Sequence number 110
Recording times 111
Binary signals 111
Analog signals 111
Behavior during test mode 111
Indications 113
Application 113
Functionality 113
Calculations 114
Supervision of AC input quantities (DA) 115
Application 115

Contents

Functionality 115
User-defined measuring ranges 116
Continuous monitoring of the measured quantity 116
Continuous supervision of the measured quantity 117
Design 122
Calculations 123

Chapter 9 Data communication 127

Serial communication 128
Serial communication, SPA 128
Application 128
Functionality 129
Design 129
Calculations 130
Serial communication, IEC (IEC 60870-5-103 protocol) 130
Application 130
Functionality 132
Design 132
Calculation 134
Serial communication, LON 136
Application 136
Functionality 136
Design 136
Calculations 137
Serial communication modules 137
SPA/IEC 137
LON 138

Chapter 10 Hardware modules 139

Platform 140
General 140
Platform configuration 140
1/2x19" platform 141
Transformer module (TRM) 142
A/D module (ADM) 145
Main processing module (MPM) 147
Input/Output modules 149
General 149
Binary I/O module (IOM) 150
Power supply module (PSM) 152
Local LCD human machine interface (LCD-HMI) 153
Application 153
Serial communication modules (SCM) 155
Design, SPA/IEC 155
Design, LON 155

Contents

Chapter 1 Introduction

About this chapter

This chapter introduces you to the manual as such.

1 Introduction to the application manual

1.1 About the complete set of manuals for a terminal

The users manual (UM) is a complete set of four different manuals:

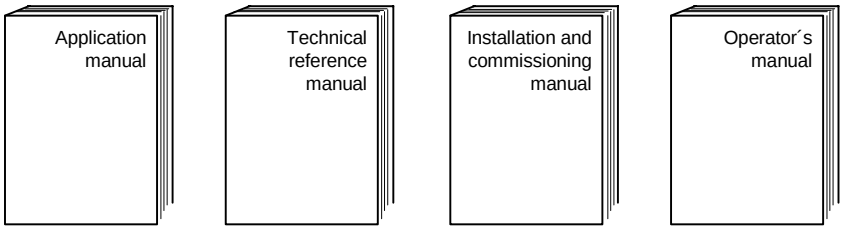

The Application Manual (AM) contains descriptions, such as application and functionality descriptions as well as setting calculation examples sorted per function. The application manual should be used when designing and engineering the protection terminal to find out when and for what a typical protection function could be used. The manual should also be used when calculating settings and creating configurations.

The Technical Reference Manual (TRM) contains technical descriptions, such as function blocks, logic diagrams, input and output signals, setting parameter tables and technical data sorted per function. The technical reference manual should be used as a technical reference during the engineering phase, installation and commissioning phase, and during the normal service phase.

The Operator's Manual (OM) contains instructions on how to operate the protection terminal during normal service (after commissioning and before periodic maintenance tests). The operator's manual can be used to find out how to handle disturbances or how to view calculated and measured network data in order to determine the cause of a fault.

The Installation and Commissioning Manual (ICM) contains instructions on how to install and commission the protection terminal. The manual can also be used as a reference if a periodic test is performed. The manual covers procedures for mechanical and electrical installation, energizing and checking of external circuitry, setting and configuration as well as verifying settings and performing a directional test. The chapters and sections are organized in the chronological order (indicated by chapter/section numbers) in which the protection terminal should be installed and commissioned.

1.2 About the application manual

The application manual contains the following chapters:

- The chapter *"General"* describes the terminal in general.
- The chapter *"Common functions"* describes the common functions in the terminal.
- The chapter *"Line distance"* describes the line distance functions in the terminal.

- The chapter *"Current"* describes the current protection functions.
- The chapter *"Voltage"* describes the voltage protection functions.
- The chapter *"Power system supervision"* describes the power system supervision functions.
- The chapter *"Monitoring"* describes the monitoring functions.
- The chapter *"Metering"* describes the metering functions.
- The chapter *"System protection and control functions"*describes the system protection and control functions.
- The chapter *"Data communication"* describes the data communication and the associated hardware.
- The chapter *"Hardware modules"* describes the different hardware modules.

1.3 Intended audience

1.3.1 General

The application manual is addressing the system engineer/technical responsible who is responsible for specifying the application of the terminal.

1.3.2 Requirements

The system engineer/technical responsible must have a good knowledge about protection systems, protection equipment, protection functions and the configured functional logics in the protection.

1.4 Related documents

Documents related to REB 551-C2*2.5	Identity number
Operator's manual	1MRK 505 109-UEN
Installation and commissioning manual	1MRK 505 111-UEN
Technical reference manual	1MRK 505 110-UEN
Application manual	1MRK 505 112-UEN
Buyer's guide	1MRK 505 108-BEN

1.5 Revision notes

Revision	Description
B	Minor updates in chapter: • Common functions/Configurable logic blocks (CL1) • Line differential/Line differential protection, phase segregated (DIFL) • Hardware/ Main processing module (MPM)

1.6 Glossary

AC	Alternating Current
ACrv2	Setting A for programmable overvoltage IDMT curve, step 2
A/D converter	Analog to Digital converter
ADBS	Amplitude dead-band supervision
AIM	Analog input module
ANSI	American National Standards Institute
ASCT	Auxiliary summation current transformer
ASD	Adaptive Signal Detection
AWG	American Wire Gauge standard
BIM	Binary input module
BLKDEL	Block of delayed fault clearing
BOM	Binary output module
BR	Binary transfer receive over LDCM
BS	British Standard
BSR	Binary Signal Receive (SMT) over LDCM
BST	Binary Signal Transmit (SMT) over LDCM
BT	Binary Transfer Transmit over LDCM
C34.97	
CAN	Controller Area Network. ISO standard (ISO 11898) for serial communication
CAP 531	Configuration and programming tool
CB	Circuit breaker
CBM	Combined backplane module
CCITT	Consultative Committee for International Telegraph and Telephony. A United Nations sponsored standards body within the International Telecommunications Union.
CCS	Current circuit supervision
CEM	Controller area network emulation module
CIM	Communication interface module
CMPPS	Combined Mega Pulses Per Second
CO cycle	Close-Open cycle
Co-directional	Way of transmitting G.703 over a balanced line. Involves two twisted pairs making it possible to transmit information in both directions
Contra-directional	Way of transmitting G.703 over a balanced line. Involves four twisted pairs of with two are used for transmitting data in both directions, and two pairs for transmitting clock signals

CPU	Central Processor Unit
CR	Carrier Receive
CRC	Cyclic Redundancy Check
CRL	POR carrier for WEI logic
CS	Carrier send
CT	Current transformer
CT1L1	Input to be used for transmit CT group 1line L1 in signal matrix tool
CT1L1NAM	Signal name for CT-group 1line L1 in signal matrix tool
CT2L3	Input to be used for transmission of CT-group 2 line L3 to remote end
CT2N	Input to be used for transmission of CT-group 2 neutral N to remote end.
CVT	Capacitive voltage transformer
DAR	Delayed auto-reclosing
db	dead band
DBDL	Dead bus dead line
DBLL	Dead bus live line
DC	Direct Current
DIN-rail	Rail conforming to DIN standard
DIP-switch	Small switch mounted on a printed circuit board
DLLB	Dead line live bus
DSP	Digital signal processor
DTT	Direct transfer trip scheme
EHV network	Extra high voltage network
EIA	Electronic Industries Association
EMC	Electro magnetic compatibility
ENGV1	Enable execution of step one
ENMULT	Current multiplier used when THOL is used for two or more lines
EMI	Electro magnetic interference
ESD	Electrostatic discharge
FOX 20	Modular 20 channel telecommunication system for speech, data and protection signals
FOX 512/515	Access multiplexer
FOX 6Plus	Compact, time-division multiplexer for the transmission of up to seven duplex channels of digital data over optical fibers
FPGA	Field Programmable Gate Array
FRRATED	Rated system frequency
FSMPL	Physical channel number for frequency calculation

G.703	Electrical and functional description for digital lines used by local telephone companies. Can be transported over balanced and unbalanced lines
G.711	Standard for pulse code modulation of analog signals on digital lines
GCM	Communication interface module with carrier of GPS receiver module
GI	General interrogation command
GIS	Gas insulated switchgear.
GOOSE	Generic Object Orientated Substation Event
GPS	Global positioning system
GR	GOOSE Receive (interlock)
HDLC protocol	High level data link control, protocol based on the HDLC standard
HFBR connector type	Fibre connector receiver
HMI	Human-Machine Interface
HSAR	High-Speed Auto-Reclosing
HV	High voltage
HVDC	High voltage direct current
HysAbsFreq	Absolute hysteresis for over and under frequency operation
HysAbsMagn	Absolute hysteresis for signal magnitude in percentage of Ubase
HysRelMagn	Relative hysteresis for signal magnitude
HystAbs	Overexcitation level of absolute hysteresis as a percentage
HystRel	Overexcitation level of relative hysteresis as a percentage
IBIAS	Magnitude of the bias current common to L1, L2 and L3
IDBS	Integrating dead-band supervision
IDMT	Minimum inverse delay time
IDMTtmin	Inverse delay minimum time in seconds
IdMin	Operational restrictive characteristic, section 1 sensitivity, multiple Ibase
IDNSMAG	Magnitude of negative sequence differential current
Idunre	Unrestrained prot. limit multiple of winding1 rated current
ICHARGE	Amount of compensated charging current
IEC	International Electrical Committee
IEC 186A	
IEC 60044-6	IEC Standard, Instrument transformers – Part 6: Requirements for protective current transformers for transient performance
IEC 60870-5-103	Communication standard for protective equipment. A serial master/slave protocol for point-to-point communication
IEEE	Institute of Electrical and Electronics Engineers
IEEE 802.12	A network technology standard that provides 100 Mbits/s on twisted-pair or optical fiber cable

IEEE P1386.1	PCI Mezzanine Card (PMC) standard for local bus modules. References the CMC (IEEE P1386, also known as Common Mezzanine Card) standard for the mechanics and the PCI specifications from the PCI SIG (Special Interest Group) for the electrical
EMF	Electro magnetic force
IED	Intelligent electronic device
I-GIS	Intelligent gas insulated switchgear
IL1RE	Real current component, phase L1
IL1IM	Imaginary current component, phase L1
IminNegSeq	Negative sequence current must be higher than this to be used
INAMPL	Present magnitude of residual current
INSTMAGN	Magnitude of instantaneous value
INSTNAME	Instance name in signal matrix tool
IOM	Binary Input/Output module
IPOSIM	Imaginary part of positive sequence current
IPOSRE	Real component of positve sequence current
IP 20	Enclosure protects against solid foreign objects 12.5mm in diameter and larger but no protection against ingression of liquid according to IEC60529. Equivalent to NEMA type 1.
IP 40	Enclosure protects against solid foreign objects 1.0mm in diameter or larger but no protection against ingression of liquid according to IEC60529.
IP 54	Degrees of protection provided by enclosures (IP code) according to IEC 60529. Dust protected. Protected against splashing water. Equivalent to NEMA type 12.
Ip>block	Block of the function at high phase current in percentage of base
IRVBLK	Block of current reversal function
IRV	Activation of current reversal logic
ITU	International Telecommunications Union
k2	Time multiplier in IDMT mode
kForIEEE	Time multiplier for IEEE inverse type curve
LAN	Local area network
LIB 520	
LCD	Liquid chrystal display
LDCM	Line differential communication module
LDD	Local detection device
LED	Light emitting diode
LNT	LON network tool
LON	Local operating network

MAGN	Magnitude of deadband value
MCB	Miniature circuit breaker
MCM	Mezzanine carrier module
MIM	Milliampere Input Module
MIP	
MPPS	
MPM	Main processing module
MV	Medium voltage
MVB	Multifunction vehicle bus. Standardized serial bus originally developed for use in trains
MVsubEna	Enable substitution
NegSeqROA	Operate angle for internal/external negative sequence fault discriminator.
NSANGLE	Angle between local and remote negative sequence currents
NUMSTEP	Number of steps that shall be activated
NX	
OCO cycle	Open-Close-Open cycle
PCI	Peripheral Component Interconnect
PCM	Pulse code modulation
PISA	Process interface for sensors & actuators
PLD	Programmable Logic Device
PMC	
POTT	Permissive overreach transfer trip
PPS	Precise Positioning System
Process bus	Bus or LAN used at the process level, that is, in near proximity to the measured and/or controlled components
PSM	Power supply module
PST	Parameter setting tool
PT ratio	Potential transformer or voltage transformer ratio
PUTT	Permissive underreach transfer trip
R1A	Source resistance A (near end)
R1B	Source resistance B (far end)
RADSS	Resource Allocation Decision Support System
RASC	Synchrocheck relay, from COMBIFLEX range.
RCA	Functionality characteristic angle
REVAL	Evaluation software
RFPP	Resistance of phase-to-phase faults

RFPE	Resistance of phase-to-earth faults
RISC	Reduced instruction set computer
RMS value	Root mean square value
RS422	A balanced serial interface for the transmission of digital data in point-to-point connections
RS485	Serial link according to EIA standard RS485
RS530	A generic connector specification that can be used to support RS422, V.35 and X.21 and others
RTU	Remote Terminal Unit
RTC	Real Time Clock
SA	Substation Automation
SC	Switch or push-button to close
SCS	Station control system
SLM	Serial communication module. Used for SPA/LON/IEC communication
SMA connector	Sub Miniature version A connector
SMS	Station monitoring system
SPA	Strömberg Protection Acquisition, a serial master/slave protocol for point-to-point communication
SPGGIO	Single Point Gxxxxx Generic Input/Output
SRY	Switch for CB ready condition
ST3UO	RMS voltage at neutral point
STL1	Start signal from phase L1
ST	Switch or push-button to trip
SVC	Static VAr compensation
t1 1Ph	Open time for shot 1, single phase
t1 3PhHS	Open time for shot 1, high speed reclosing three phase
tAutoContWait	Wait period after close command before next shot
tCBCLosedMin	Minimum time that the circuit breaker must be closed before new sequence is permitted
tExtended t1	Open time extended by this value if Extended t1 is true
THL	Thermal Overload Line cable
THOL	Thermal overload
tInhibit	Reset reclosing time for inhibit
tPulse	Pulse length for single command outputs
TP	Logic Pulse Timer
tReporting	Cycle time for reporting of counter value
tRestore	Restore time delay

TCS	Trip circuit supervision
TNC connector	Type of bayonet connector, like BNC connector
TPZ, TPY, TPX, TPS	Current transformer class according to IEC
tReclaim	Duration of the reclaim time
TRIPENHA	Trip by enhanced restrained differential protection
TRIPRES	Trip by restrained differential protection
TRL1	Trip signal from phase 1
truck	Isolator with wheeled mechanism
tSync	Maximum wait time for synchrocheck OK
TTRIP	Estimated time to trip (in minutes)
UBase	Base setting for phase-phase voltage in kilovolts
U/I-PISA	Process interface components that delivers measured voltage and current values
UNom	Nominal voltage in % of UBase for voltage based timer
UPS	Measured signal magnitude (voltage protection)
UTC	Coordinated Universal Time. A coordinated time scale, maintained by the Bureau International des Poids et Mesures (BIPM), which forms the basis of a coordinated dissemination of standard frequencies and time signals
V.36	Same as RS449. A generic connector specification that can be used to support RS422 and others
VDC	Volts Direct Current
WEI	Week-end infeed logic
VT	Voltage transformer
VTSZ	Block of trip from weak-end infeed logic by an open breaker
X1A	Source reactance A (near end)
X1B	Source reactance B (far end)
X1L	Positive sequence line reactance
X.21	A digital signalling interface primarily used for telecom equipment
XLeak	Winding reactance in primary ohms
XOL	Zero sequence line reactance
ZCOM-CACC	Forward overreaching zone used in the communication scheme
ZCOM-CR	Carrier Receive Signal
ZCOM-TRIP	Trip from the communication scheme
ZCOM-LCG	Alarm Signal LIne-check Guard

Chapter 2 General

About this chapter

This chapter describes the terminal in general.

1 Features

- Versatile local human-machine interface (HMI)
- Simultaneous dual protocol serial communication facilities
- Extensive self-supervision with internal event recorder
- Time synchronization with 1 ms resolution
- Four independent groups of complete setting parameters
- Powerful software ‘tool-box’ for monitoring, evaluation and user configuration
- Pre-configured protection terminal for cost-effective engineering and commissioning
- Compact half 19" case size
- One- and three-pole automatic reclosing
- Synchro- and energizing check for single circuit breaker arrangements

2 Functions

- Secondary system supervision
  - Fuse failure supervision, zero sequence (FUSEzs)
- Control
  - Synchro-check and energizing-check, single circuit breaker (SYN1)
  - Autorecloser - 1- and/or 3-phase, single circuit breaker (AR1-1/3)
- Logic
  - Three pole tripping logic (TR01-3)
  - Single, two or three pole tripping logic (TR01-1/2/3)

3 Application

The main purpose of the REB 551-C2 terminal is to provide a standalone automatic reclosing function with synchrocheck and energizing check. It is intended for use in applications where controlled closing of the circuit breaker is required, but where integrating the automatic reclosing function into the protection terminals is not preferred or suitable. This terminal is also eminently suited for use in refurbishment applications where old electromechanical relays are to be replaced.

4 Design

Type tested software and hardware that comply with international standards and ABBÃÂ´s internal design rules together with extensive self monitoring functionality, ensure high reliability of the complete terminal.

The terminal’s closed and partly welded steel case makes it possible to fulfill the stringent EMC requirements.

All serial data communcation is via optical connections to ensure immunity against disturbances.

A fully functional terminal comprising compact hardware and pre-selected control and monitoring functions that were carefully chosen, configured and tested to meet a broad range of application requirements. This ready to connect and commission feature makes this product a cost effective solution for both new installations and the refurbishment of existing installations.

5 Requirements

5.1 General

The operation of a protection measuring function is influenced by distortion, and measures need to be taken in the protection to handle this phenomenon. One source of distortion is current transformer saturation. In this protection terminal, measures are taken to allow for a certain amount of CT saturation with maintained correct operation. This protection terminal can allow relatively heavy current transformer saturation.

Protection functions are also affected by transients caused by capacitive voltage transformers (CVTs) but as this protection terminal has a very effective filter for these transients, the operation is hardly affected at all.

5.2 Voltage transformers

Magnetic or capacitive voltage transformers can be used.

Capacitive voltage transformers (CVTs) should fulfil the requirements according to IEC 186A, Section 20, regarding transients. According to the standard, at a primary voltage drop down to zero, the secondary voltage should drop to less than 10% of the peak pre-fault value before the short circuit within one cycle.

The protection terminal has an effective filter for this transient, which gives secure and correct operation with CVTs.

5.3 Current transformers

5.3.1 Classification

The performance of the REx 5xx terminal depends on the conditions and the quality of the current signals fed to it. The protection terminal REx 5xx has been designed to permit relatively heavy current transformer saturation with maintained correct operation. To guarantee correct operation, the CTs must be able to correctly reproduce the current for a minimum time before the CT will begin to saturate. To fulfil the requirement on a specified time to saturation the CTs must fulfil the requirements of a minimum secondary e.m.f. that is specified below.

There are several different ways to specify CTs. Conventional magnetic core CTs are usually specified and manufactured according to some international or national standards, which specify different protection classes as well. However, generally there are three different types of current transformers:

- high remanence type CT
- low remanence type CT
- non remanence type CT

The high remanence type has no limit for the remanent flux. This CT has a magnetic core without any airgap and a remanent flux might remain for almost infinite time. In this type of transformers the remanence can be up to 70-80% of the saturation flux. Typical examples of high remanence type CT are class P, PX,TPS, TPX according to IEC, class P, X according to BS (old British Standard) and nongapped class C, K according to ANSI/IEEE.

The low remanence type has a specified limit for the remanent flux. This CT is made with a small airgap to reduce the remanence to a level that does not exceed 10% of the saturation flux. The small airgap has only very limited influence on the other properties of the CT. Class PR, TPY according to IEC is low remanence type CTs.

The non remanence type CT has practically negligible level of remanent flux. This type of CT has relatively big airgaps in order to reduce the remanence to practically zero level. At the same time, these airgaps minimize the influence of the DC-component from the primary fault current. The airgaps will also reduce the measuring accuracy in the non-saturated region of operation. Class TPZ according to IEC is a non remanence type CT.

The rated equivalent limiting secondary e.m.f. E_{al} according to the IEC 60044-6 standard is used to specify the CT requirements for REx 5xx. The requirements are also specified according to other standards.

5.3.2 Conditions

The performances of the protection functions were checked at both symmetrical and fully asymmetrical fault currents. A source with a time constant of about 120 ms was used in the tests. The current requirements below are thus applicable both for symmetrical and asymmetrical fault currents.

When current transformers of low remanence type (e.g. TPY, PR) are used, practically no additional margin is needed.

For current transformers of high remanence type (e.g. TPX), the small probability of a fully asymmetrical fault, together with maximum remanence in the same direction as the flux generated by the fault, has to be kept in mind at the decision of an additional margin. Fully asymmetrical fault current will be achieved when the fault occurs at zero voltage (0°). Investigations have proved that 95% of the faults in the network will occur when the voltage is between 40° and 90°.

5.3.3 Fault current

The current transformer requirements are based on the maximum fault current for faults in different positions. Maximum fault current will occur for three-phase faults or single-phase-to-earth faults. The current for a single phase-to-earth fault will exceed the current for a three-phase fault when the zero sequence impedance in the total fault loop is less than the positive sequence impedance.

When calculating the current transformer requirements, maximum fault current should be used and therefore both fault types have to be considered.

5.3.4 Cable resistance and additional load

The current transformer saturation is directly affected by the voltage at the current transformer secondary terminals. This voltage, for an earth fault, is developed in a loop containing the phase and neutral conductor, and relay load. For three-phase faults, the neutral current is zero, and only the phase conductor and relay phase load have to be considered.

In the calculation, the loop resistance should be used for phase-to-earth faults and the phase resistance for three-phase faults.

5.3.5 Current transformer requirements for CTs according to other standards

All kinds of conventional magnetic core CTs are possible to be used with REx 5xx terminals if they fulfil the requirements that correspond to the above specified according to the IEC60044-6 standard. From the different standards and available data for relaying applications it is possible to approximately calculate a secondary e.m.f. of the CT. It is then possible to compare this to the required secondary e.m.f. E_{alreq} and judge if the CT fulfils the requirements. The requirements according to some other standards are specified below.

Current transformer according to IEC 60044-1, class P, PR

A CT according to IEC60044-1 is specified by the secondary limiting e.m.f. E_{2max}. The value of the E_{2max} is approximately equal to E_{al} according to IEC60044-6.

$$E_{al} \approx E_{2max}$$

The current transformers must have a secondary limiting e.m.f. E_{2max} that fulfills the following:

$$E_{2max} > \text{maximum of } E_{alreq}$$

Current transformer according to IEC 60044-1, class PX, IEC 60044-6, class TPS (and old British standard, class X)

CTs according to these classes are specified by the rated knee-point e.m.f. E_{knee} (or limiting secondary voltage U_{al} for TPS). The value of the E_{knee} is lower than E_{al} according to IEC60044-6. It is not possible to give a general relation between the E_{knee} and the E_{al} but normally the E_{knee} is 80 to 85% of the E_{al} value. Therefore, the rated equivalent limiting secondary e.m.f. E_{alreq} for a CT specified according to these classes can be estimated to:

$$E_{alreq} \approx 1.2 \times E_{knee}$$

The current transformer must have a rated knee-point e.m.f. E_{knee} that fulfills the following:

$$1.2 \times E_{knee} > \text{maximum of } E_{alreq}$$

Current transformer according to ANSI/IEEE

A CT according to ANSI/IEEE is specified in a little different way. For example a CT of class C has a specified secondary terminal voltage U_{ANSI}. There is a few standardized value of U_{ANSI} (e.g. for a C400 the U_{ANSI} is 400V). The rated equivalent limiting secondary e.m.f. E_{alANSI} for a CT specified according to ANSI/IEEE can be estimated as follows:

$$E_{alANSI} = | 20 \times I_{sn} \times R_{CT} + U_{ANSI} | = | 20 \times I_{sn} \times R_{CT} + 20 \times I_{sn} \times Z_{bANSI} |$$

where

Z_{bANSI}	The impedance (i.e. complex quantity) of the standard ANSI burden for the specific C class (Ω)
U_{ANSI}	The secondary terminal voltage for the specific C class (V)

The CT requirements are fulfilled if:

E_{alANSI} > maximum of E_{alreq}

Often an ANSI/IEEE CT also has a specified knee-point voltage $U_{kneeANSI}$. This is graphically defined from the excitation curve. The knee-point according to ANSI/IEEE has normally a lower value than the knee-point according to BS. The rated equivalent limiting secondary e.m.f. E_{alANSI} for a CT specified according to ANSI/IEEE can be estimated to:

$E_{alANSI} \approx 1.3 \times U_{kneeANSI}$

The current transformers must have a knee-point voltage $U_{kneeANSI}$ that fulfills the following:

$1.3 \times U_{kneeANSI}$ > maximum of E_{alreq}

6 Serial communication

6.1 SPA

Both plastic fibres and glass fibres can be used for the communication in the station. For distances up to 30 m, plastic fibres and for distances up to 500 m, glass fibres are suitable. Glass and plastic fibres can be mixed in the same loop. The transmitter and reciever connectors at the bus connection unit has to be of corresponding types, i.e. glass or plastic connector. See also “Hardware modules” in the Technical reference manual for technical data on the fibres.

For communication on longer distances, telephone modems are used. The modems must be Hayes-compatible ones using “AT” commands with automatic answering (AA) capability. The telephone network must comply with the ITU (CCITT) standards.

For connection of the optical fibre loop to a PC or a telephone modem, an opto/electrical converter is required. The converter is supplied by ABB.

6.2 LON

The protection terminal can be used in a substation control system (SCS). For that purpose, connect the LON communication link to a LON Star Coupler via optical fibres. The optical fibres are either glass or plastic with specification according to “Hardware modules” in the Technical reference manual.

A PC can be used as a station HMI. The PC must be equipped with a communication card for LON (e.g. Echelon PCLTA card).

To configure the nodes in a SCS, the LON Network Tool is needed.

6.3 IEC 870-5-103

As an alternative to SPA communication, the terminals can use the IEC 870–5–103 standard protocol for protection functions. The terminals communicate with a primary station level system. In IEC terminology a primary station is a master and a secondary station is a slave. The communication is based on a point to point principle, where the terminal is a slave. The master must have a program that can interpret the IEC 870–5–103 communication messages. The IEC communication link is connected via optical fibres. The optical fibres are either glass or plastic with specification according to “Hardware modules” in the Technical reference manual.

For more detailed requirements refer to the IEC 870–5–103 standard.

7 Terminal identification and base values

7.1 Application

Serial number and software version are stored in the terminal. The identification names and numbers for the station, the object and the terminal (unit) itself can be entered into the terminal by the customer. Also the ordering numbers of included modules are stored in the terminal. This information can be read on the local HMI or when communicating with the terminal through a PC or with SMS/SCS.

The base currents, voltages and rated frequency must be set since the values affect many functions. The input transformers ratio must be set as well. The ratio for the current and the voltage transformer automatically affects the measuring functions in the terminal.

The internal clock is used for time tagging of:

- Internal events
- Disturbance reports
- Events in a disturbance report
- Events transmitted to the SCS substation control system

This implies that the internal clock is very important. The clock can be synchronized (see Time synchronization) to achieve higher accuracy of the time tagging. Without synchronization, the internal clock is useful for comparisons among events within the REx 5xx terminal.

7.2 Calculations

Most commonly the setting values of the high voltage power objects are calculated in primary values. This is based on the fact that all power system data like voltages, currents and impedances are given in primary values.

In the terminal, the settings are made with reference to secondary values i.e. the values as seen by the terminal on the secondary side of the main voltage- and current transformers.

Uxr and Ixr (x = 1-5) are the rated voltage and current values for the five voltage and five current input transformers within the REx 5xx terminal. The values of Uxr and Ixr are factory preset and should normally not be changed by the user since they are related to the delivered hardware. They are used only if the transformer input module (TRM) is replaced with a module that have different rated values than the one originally delivered in the terminal.

Example: The terminal is delivered with 1A current transformers, but later changed to 5A current transformers. In this case it is necessary to change all the relevant input rated quantities for currents from 1A to 5A. This can only be done from the local HMI.

The UxScale and IxScale are the actual ratio for the main measuring transformers for the protected object. The terminal only uses these settings to calculate the primary quantities and to show these quantities as service values, e.g. primary phasors in the local HMI or thru CAP 540 or SMS 510. They are also used by CAP 540 to visualize voltage and current waveforms in primary values.They do not affect the operation (trip or start) of any protection function.

Uxb and Ixb define the secondary base voltage and current values, used to define the per-unit base of the terminal. The settings are made in percent of the Uxb and Ixb values.

The only recommended way to use the base value settings Uxb and Ixb is to harmonize the per-unit base values of the terminal with the actual secondary rated values of the primary measuring transformers.

The base values only affect the settings of current functions and voltage functions, not impedance based functions e.g. ZM, PHS and GFC. The impedance-based functions are set in secondary ohms. For more details on the setting calculations, see each function.

7.2.1 Example 1

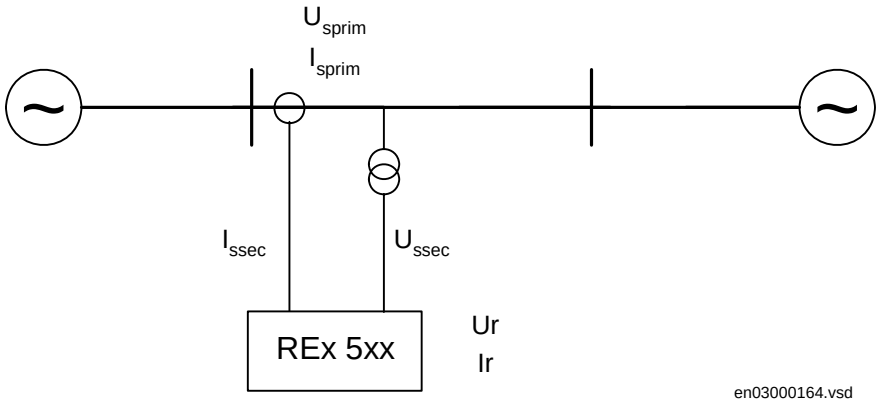

where:

U_{sprim}	is primary setting value of the voltage
I_{sprim}	is primary setting value of the current
U_{ssec}	is secondary setting value of the voltage
I_{ssec}	is secondary setting value of the current
Ur	is rated voltage of the terminal
Ir	is rated current of the terminal

Figure 1: Example system

Assume the following values:

Ur = 110V, Ir = 1A, U_{sprim} = 60kV phase to earth, I_{sprim} = 1500A

CT-ratio = $\frac{1000A}{1A}$ and VT-ratio = $\frac{110kV}{110V}$

Current settings

Ixscale = CT-ratio = 1000/1 = 1000

In this case the rated current of the terminal and the rated secondary current of the main CT match. The base value is set equal to the rated value.

Ixb = 1A

$$I_{ssec} = \frac{I_{sprim}}{Ixscale}$$

(Equation 1)

$$I_{ssec} = \frac{1500A}{1000} = 1.5A$$

(Equation 2)

A current setting value, e.g. IP>>, is given in percentage of the secondary base current value,Ixb, associated with the current transformer input Ix:

$$IP>> = 100 \cdot \frac{I_{ssec}}{Ixb}\%$$

(Equation 3)

$$IP>> = 100 \cdot \frac{1.5}{1}\% = 150\%$$

(Equation 4)

Voltage settings

Uxscale = VT-ratio = 110 kV/110 V = 1000

The voltage levels are normally given as system (phase to phase) voltage, while the input transformers of the terminal are connected phase to earth. A Ur of 110V corresponds to a Uxr of $110/\sqrt{3} \approx 63.5$V. In this case the rated voltage of the terminal and the rated secondary voltage of the main VT match. The base value is set equal to the rated values.

Uxb= 63.5V

$$U_{ssec} = \frac{U_{sprim}}{Uxscale}$$

(Equation 5)

$$U_{ssec} = \frac{60kV}{1000} = 60V$$

(Equation 6)

A voltage setting value, e.g. UPE<, is given in percentage of the secondary base voltage value,Uxb, associated with the voltage transformer input Ux:

$$UP< = 100 \cdot \frac{U_{ssec}}{Uxb}\%$$

(Equation 7)

$$UP< = 100 \cdot \frac{60}{63.5}\%$$

(Equation 8)

7.2.2 Example 2

Assume the following values:

Ur = 110V, Ir = 1A U_{sprim} = 60kV phase to earth, I_{sprim} = 1500A

CT-ratio = $\frac{1000A}{2A}$ and VT-ratio = $\frac{110kV}{100V}$

Current settings

Ixscale = CT-ratio = 1000/2 = 500

In this case the rated current of the terminal and the secondary rated current of the main CT do not match. This will have some implications on the setting procedure.

Not using base values

The base value is set equal to the rated value of the terminal.

Ixb = 1A

$$I_{ssec} = \frac{1500A}{500} = 3A$$ according to equation 1.

This corresponds to 150% of the rated CT secondary current and 300% of the terminal rated current.

A current setting value, e.g. IP>>, is given in percentage of Ixb.

$$IP>> = 100 \cdot \frac{3}{1}\% = 300\%$$ according to equation 3.

Using base values

The base value is set equal to the rated secondary value of the main CT.

Ixb = 2A

$$I_{ssec} = \frac{1500A}{500} = 3A$$ according to equation 1

This corresponds to 150% of the rated CT secondary current. As Ixb is selected equal to the rated CT secondary current, the value (150%) can be directly entered as setting, see below.

$$IP>> = 100 \cdot \frac{3}{2}\% = 150\%$$ according to equation 3

Voltage settings

Uxscale = VT-ratio = 110 kV/100 V = 1100

An Ur of 110 V corresponds to an Uxr of $110/\sqrt{3} \approx 63.5$V. The rated secondary voltage of the VT corresponds to $100/\sqrt{3} \approx 57.7$V. In this case the rated voltage of the terminal and the secondary rated voltage of the main VT do not match. This will have some implications on the setting procedure.

Not using base values

The base value is set equal to the rated value of the terminal.

Uxb = 63.5V

$$U_{ssec} = \frac{60kV}{1100} = 54.5V$$ according to equation 5.

This corresponds to 94% of the rated VT secondary voltage and 86% of the terminal rated voltage.

A voltage setting value, e.g. UPE<, is given in percentage of Uxb:

$$UP< = 100 \cdot \frac{54.5}{63.5}\% = 86\%$$

according to equation 7.

Using base values

The base value is set equal to the rated secondary value of the main VT.

Uxb = 57.7V

$$U_{ssec} = \frac{60kV}{1100} = 54.5V$$

according to equation 5.

This corresponds to 94% of the rated VT secondary voltage. As Uxb is selected equal to the rated VT secondary voltage, the value (94%) can be directly entered as setting, see below.

$$UP< = 100 \cdot \frac{54.5}{57.7}\% = 94\%$$

according to equation 7.

Chapter 3 Common functions

About this chapter

This chapter presents the common functions in the terminal.

1 Real-time clock with external time synchronzation (TIME)

1.1 Application

Use time synchronisation to achieve a common time base for the terminals in a protection and control system. This makes comparision of events and disturbance data between all terminals in the system possible.

Time-tagging of internal events and disturbances is an excellent help when evaluating faults. Without time synchronisation, only the events within the terminal can be compared to one another. With time synchronisation, events and disturbances within the entire station, and even between line ends, can be compared during an evaluation.

1.2 Functionality

Two main alternatives of external time synchronization are available. Either the synchronization message is applied via any of the communication ports of the terminal as a telegram message including date and time, or as a minute pulse, connected to a binary input. The minute pulse is used to fine tune already existing time in the terminals.

The REx 5xx terminal has its own internal clock with date, hour, minute, second and millisecond. It has a resolution of 1 ms.

The clock has a built-in calendar that handles leap years through 2098. Any change between summer and winter time must be handled manually or through external time synchronization. The clock is powered by a capacitor, to bridge interruptions in power supply without malfunction.

The internal clock is used for time-tagging disturbances, events in Substation monitoring system (SMS) and Substation control system (SCS), and internal events.

1.3 Calculations

The time is set with year, month, day and time. Refer to the *Installation and commissioning manual* for information on the setting procedure.

When the source of time synchronization is selected on the local HMI, the parameter is called TimeSyncSource. The time synchronisation source can also be set from the CAP tool. The setting parameter is then called SYNCSCR. The setting alternatives are:

- None (no synchronisation)
- LON
- SPA
- IEC
- Minute pulse positive flank
- Minute pulse negative flank

The function input to be used for minute-pulse synchronisation is called TIME-MINSYNC.

The internal time can be set manually down to the minute level, either via the local HMI or via any of the communication ports. The time synchronisation fine tunes the clock (seconds and milliseconds). If no clock synchronisation is active, the time can be set down to milliseconds.

2 Four parameter setting groups (GRP)

2.1 Application

Different conditions in networks of different voltage levels require high adaptability of the used protection and control units to best provide for dependability, security and selectivity requirements. Protection units operate with higher degree of availability, especially, if the setting values of their parameters are continuously optimised regarding the conditions in power system.

The operational departments can plan different operating conditions for the primary equipment. The protection engineer can prepare in advance for the necessary optimised and pre-tested settings for different protection functions. Four different groups of setting parameters are available in the REx 5xx terminals. Any of them can be activated automatically through up to four different programmable binary inputs by means of external control signals.

2.2 Functionality

Select a setting group by using the local HMI, from a front connected personal computer, remotely from the station control or station monitoring system or by activating the corresponding input to the GRP function block.

Each input of the function block is configurable to any of the binary inputs in the terminal. Configuration must be performed by using the CAP configuration tool.

Use external control signals to activate a suitable setting group when adaptive functionality is necessary. Input signals that should activate setting groups must be either permanent or a pulse longer than 200 ms.

More than one input may be activated simultaneously. In such cases the lower order setting group has priority. This means that if for example both group four and group two are set to activate, group two will be the one activated.

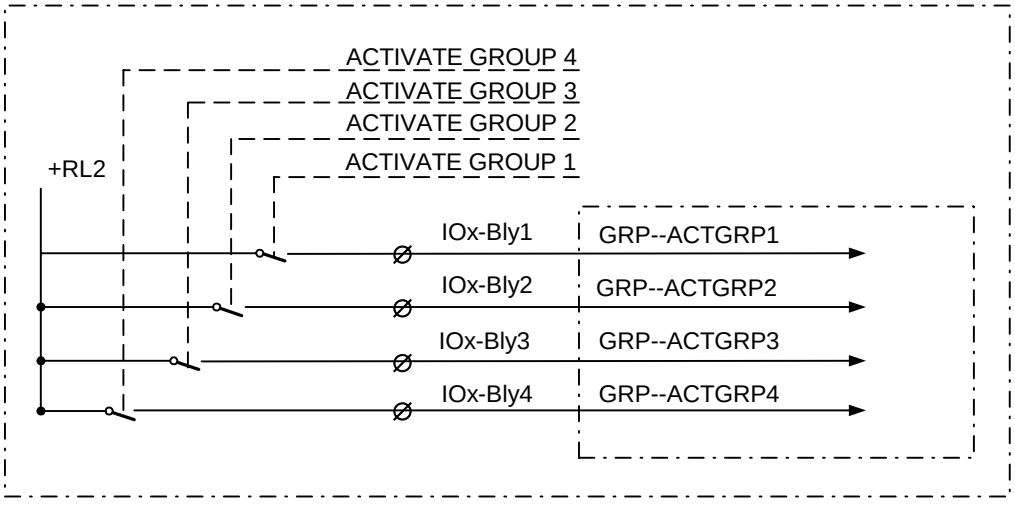

2.3 Design

The GRP function block has four functional inputs, each corresponding to one of the setting groups stored within the terminal. Activation of any of these inputs changes the active setting group. Four functional output signals are available for configuration purposes, so that continuous information on active setting group is available.

3 Setting restriction of HMI (SRH)

Note!

The HMI--BLOCKSET functional input must be configured to the selected binary input before setting the setting restriction function in operation. Carefully read the instructions.

3.1 Application

Use the setting restriction function to prevent unauthorized setting changes and to control when setting changes are allowed. Unpermitted or uncoordinated changes by unauthorized personnel may influence the security of people and cause severe damage to primary and secondary power circuits.

By adding a key switch connected to a binary input a simple setting change control circuit can be built simply allowing only authorized keyholders to make setting changes from the local HMI.

3.2 Functionality

The restriction of setting via the local HMI can be activated from the local HMI only. Activating the local HMI setting restriction prevent unauthorized changes of the terminal settings or configuration.

The HMI-BLOCKSET functional input can be configured only to one of the available binary inputs of the terminal. The terminal is delivered with the default configuration HMI--BLOCKSET connected to NONE-NOSIGNAL. The configuration can be made from the local HMI only, see the Installation and comissioning manual.

The function permits remote changes of settings and reconfiguration through the serial communication ports. The restriction of setting from remote can be activated from the local HMI only. Refer to the Technical reference manual for SPA serial communication parameters.

All other functions of the local human-machine communication remain intact. This means that an operator can read disturbance reports, setting values, the configuration of different logic circuits and other available information.

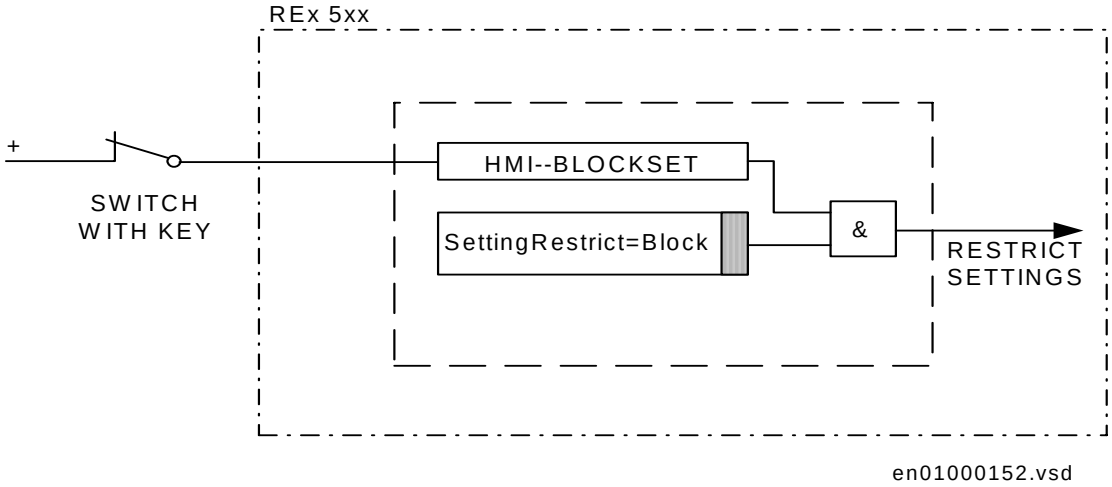

Figure 2: Connection and logic diagram for the BLOCKSET function

4 I/O system configurator (IOP)

4.1 Application

The I/O system configurator must be used in order to recognize included modules and to create internal adress mappings between modules and protections and other functions.

4.2 Functionality

The I/O system configurator is used to add, remove or move I/O modules in the REx 5xx terminals. To configure means to connect the function blocks that represent each I/O module (BIM, BOM, IOM, DCM and MIM) to a function block for the I/O positions (IOP1) that represent the physical slot in the rack.

Available I/O modules are:

- BIM, *B*inary *I*nput *M*odule with 16 binary input channels.
- BOM, *B*inary *O*utput *M*odule with 24 binary output channels.
- IOM, *I*nput/*O*utput *M*odule with 8 binary input and 12 binary output channels.
- MIM, *m*A *I*nput *M*odule with six analog input channels.
- DCM, *D*ata *C*ommunication *M*odule. The only software configuration for this module is the I/O Position input.

An REx 5xx terminal houses different numbers of modules depending which kind of modules chosen.

- The 1/1 of 19-inch size casing houses a maximum of modules. But when Input/Output- or Output modules are included, the maximum of these modules are. The maximum number of mA Input modules are also limited to .

It is possible to fit modules of different types in any combination in a terminal, but the total maximum numbers of modules must be considered.

Each I/O-module can be placed in any CAN-I/O slot in the casing with one exception. The DCM-module has a fixed slot position that depends on the size of the casing.

To add, remove or move modules in the terminal, the reconfiguration of the terminal must be done from the graphical configuration CAP tool.

Users refer to the CAN-I/O slots by the physical slot numbers, which also appear in the terminal drawings.

If the user-entered configuration does not match the actual configuration in the terminal, an error output is activated on the function block, which can be treated as an event or alarm.

4.2.1 I/O position

All necessary configuration is done in the configuration CAP tool.

The Snn outputs are connected to the POSITION inputs of the I/O Modules and MIMs.

4.2.2 Configuration

The I/O-configuration can only be performed from CAP tool, the graphical configuration tool.

To configure from the graphical tool:

- First, set the function selector for the logical I/O module to the type of I/O module that is used, BIM, BOM, IOM, MIM, IOPSM or DCM.
- Secondly, connect the POSITION input of the logical I/O module to a slot output of the IOP function block.

5 Configurable logic blocks (CL1)

5.1 Application

5.1.1 Application

Different protection, control, and monitoring functions within the REx 5xx terminals are quite independent as far as their configuration in the terminal is concerned. The user cannot enter and change the basic algorithms for different functions, because they are located in the digital signal processors and extensively type tested. The user can configure different functions in the terminals to suit special requirements for different applications.

For this purpose, additional logic circuits are needed to configure the terminals to meet user needs and also to build in some special logic circuits, which use different logic gates and timers.

Logical function blocks are executed according to their execution serial numbers. To get an optimal solution select their execution serial numbers in consequtive sequence.

5.2 Functionality

5.2.1 Inverter (INV)

The INV function block is used to invert the input boolean variable. The function block (figure 3) has one input designated IVnn-INPUT where nn presents the serial number of the block. Each INV circuit has one output IVnn-OUT.

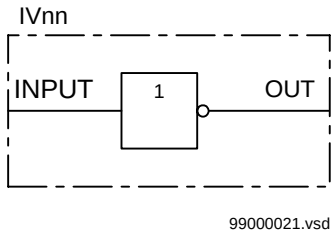

Figure 3: Function block diagram of the inverter (INV) function

Table 1: Truth table for the INV function block

INPUT	OUT
1	0
0	1

5.2.2 Controllable gate (GT)

The GT function block is used for controlling if a signal should be able to pass or not depending on a setting. The function block (figure 4) has one input, designated GTnn-INPUT, where nn presents the serial number of the block. Each GT circuit has one output, GTnn-OUT. Each gate further has a Operation On/Off which controls if the INPUT is passed to the OUT or not.

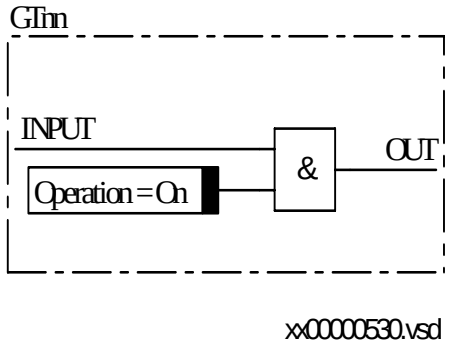

Figure 4: Function block diagram of the controllable gate (GT) function

The output signal from the GT function block is set to 1 if the input signal is 1 and Operation = On elsewhere it is set to 0. See truth table below.

Table 2: Truth table for the GT function block

INPUT	Operation	OUT
0	Off	0
1	Off	0
0	On	0
1	On	1

5.2.3 OR

OR function blocks are used to form general combinatory expressions with boolean variables. The function block (figure 5) has six inputs, designated Onnn-INPUTm, where nnn presents the serial number of the block, and m presents the serial number of the inputs in the block. Each OR circuit has two outputs, Onnn-OUT and Onnn-NOUT (inverted).

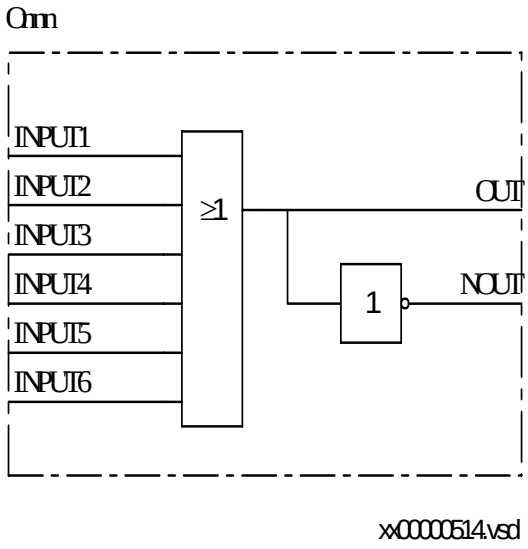

Figure 5: Function block diagram of the OR function

The output signal (OUT) is set to 1 if any of the inputs (INPUT1-6) is 1. See truth table below.

Table 3: Truth table for the OR function block

INPUT1	INPUT2	INPUT3	INPUT4	INPUT5	INPUT6	OUT	NOUT
0	0	0	0	0	0	0	1
0	0	0	0	0	1	1	0
0	0	0	0	1	0	1	0
...	...	...	...	...	...	1	0
1	1	1	1	1	0	1	0
1	1	1	1	1	1	1	0

5.2.4 AND

AND function blocks are used to form general combinatory expressions with boolean variables. The function block (figure 6) has four inputs (one of them inverted), designated Annn-INPUTm (Annn-INPUT4N is inverted), where nnn presents the serial number of the block, and m presents the serial number of the inputs in the block. Each AND circuit has two outputs, Annn-OUT and Annn-NOUT (inverted).

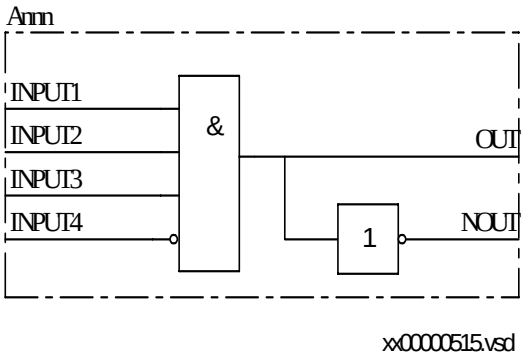

Figure 6: Function block diagram of the AND function

The output signal (OUT) is set to 1 if the inputs INPUT1-3 are 1 and INPUT4N is 0. See truth table below.

Table 4: Truth table for the AND function block

INPUT1	INPUT2	INPUT3	INPUT4N	OUT	NOUT
0	0	0	1	0	1
0	0	1	1	0	1
0	1	0	1	0	1
0	1	1	1	0	1
1	0	0	1	0	1
1	0	1	1	0	1
1	1	0	1	0	1
1	1	1	1	0	1
0	0	0	0	0	1
0	0	1	0	0	1
0	1	0	0	0	1
0	1	1	0	0	1
1	0	0	0	0	1
1	0	1	0	0	1
1	1	0	0	0	1
1	1	1	0	1	0

5.2.5 Timer

The function block TM timer has outputs for delayed input signal at drop-out and at pick-up. The timer (figure 7) has a settable time delay TMnn-T between 0.00 and 60.00 s in steps of 0.01 s. The input signal for each time delay block has the designation TMnn-INPUT, where nn

presents the serial number of the logic block. The output signals of each time delay block are TMnn-ON and TMnn-OFF. The first one belongs to the timer delayed on pick-up and the second one to the timer delayed on drop-out. Both timers within one block always have the same setting.

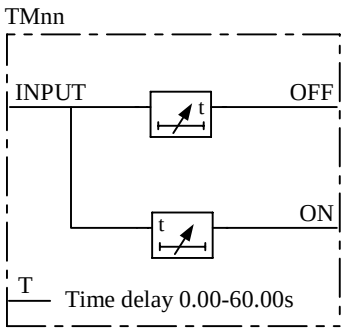

Figure 7: Function block diagram of the Timer function

The function block TL timer (figure 8) with extended maximum time delay at pick-up and at drop-out, is identical with the TM timer. The difference is the longer time delay TLnn-T, settable between 0.0 and 90000.0 s in steps of 0.1 s.

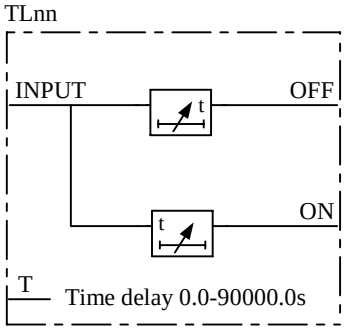

Figure 8: Function block diagram of the TimerLong function

The input variable to INPUT is obtained delayed a settable time T at output OFF when the input variable changes from 1 to 0 in accordance with the time pulse diagram, figure 9. The output OFF signal is set to 1 immediately when the input variable changes from 0 to 1.

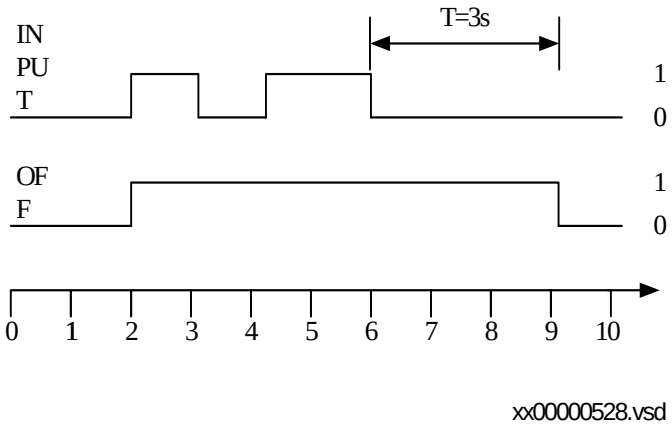

Figure 9: Example of time diagram for a timer delayed on drop-out with preset time T = 3 s

The input variable to INPUT is obtained delayed a settable time T at output ON when the input variable changes from 0 to 1 in accordance with the time pulse diagram, figure 10. The output ON signal returns immediately when the input variable changes from 1 to 0.

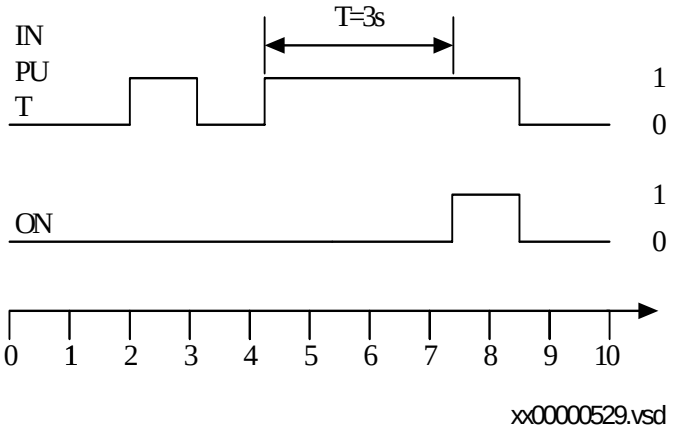

Figure 10: Example of time diagram for a timer delayed on pick-up with preset time T = 3 s

If more timers than available in the terminal are needed, it is possible to use pulse timers with AND or OR logics. Figure 11 shows an application example of how to realize a timer delayed on pick-up. Figure 12 shows the realization of a timer delayed on drop-out. Note that the resolution of the set time must be 0.2 s, if the connected logic has a cycle time of 200 ms.

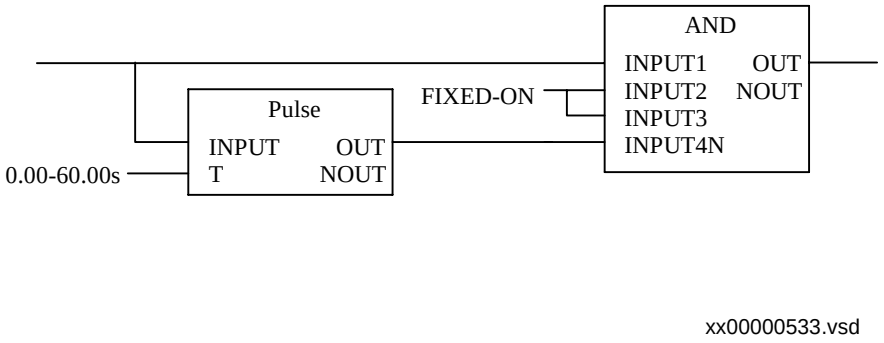

Figure 11: Realization example of a timer delayed on pick-up

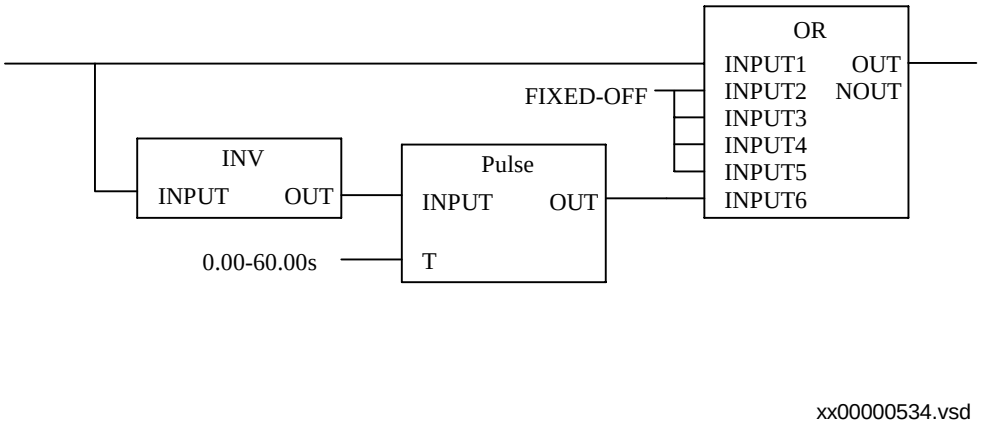

Figure 12: Realization example of a timer delayed on drop-out

5.2.6 Timer settable through HMI/SMS/PST

The function block TS timer has outputs for delayed input signal at drop-out and at pick-up. The timer (figure 13) has a settable time delay TSnn-T between 0.00 and 60.00 s in steps of 0.01 s. It also has an Operation setting On, Off which controls the operation of the timer.The input signal for each time delay block has the designation TSnn-INPUT, where nn presents the serial number of the logic block. The output signals of each time delay block are TSnn-ON and TSnn-OFF. The first one belongs to the timer delayed on pick-up and the second one to the timer delayed on drop-out. Both timers within one block always have the same setting.

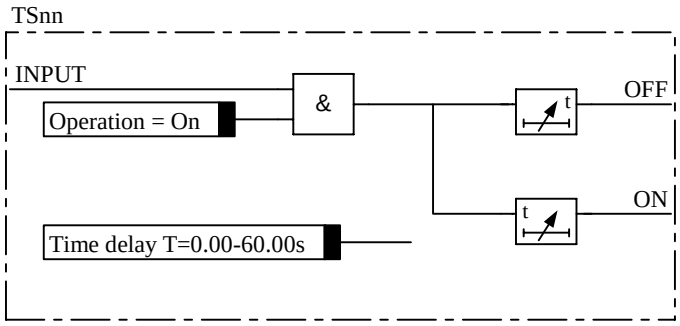

Figure 13: Function block diagram of the Settable timer function

For details about the function see the description of TM Timer.

5.2.7 Pulse

The pulse function can be used, for example, for pulse extensions or limiting of operation of outputs. The pulse timer TP (figure 14) has a settable length of a pulse between 0.00 s and 60.00 s in steps of 0.01 s. The input signal for each pulse timer has the designation TPnn-INPUT, where nn presents the serial number of the logic block. Each pulse timer has one output, designated by TPnn-OUT. The pulse timer is not retriggable, that is, it can be restarted first after that the time T has elapsed.

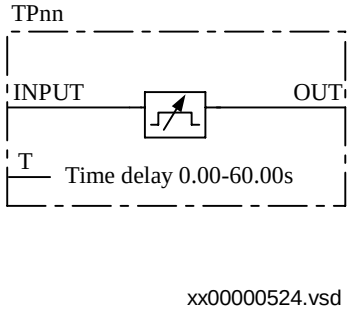

Figure 14: Function block diagram of the Pulse function

The function block TQ pulse timer (figure 15) with extended maximum pulse length, is identical with the TP pulse timer. The difference is the longer pulse length TQnn-T, settable between 0.0 and 90000.0 s in steps of 0.1 s.

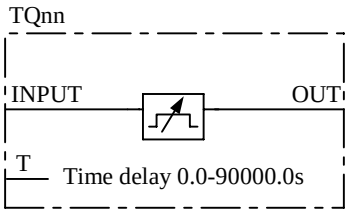

Figure 15: Function block diagram of the PulseLong function, TQ

A memory is set when the input INPUT is set to 1. The output OUT then goes to 1. When the time set T has elapsed, the memory is cleared and the output OUT goes to 0. If a new pulse is obtained at the input INPUT before the time set T has elapsed, it does not affect the timer. Only when the time set has elapsed and the output OUT is set to 0, the pulse function can be restarted by the input INPUT going from 0 to 1. See time pulse diagram, figure 16.

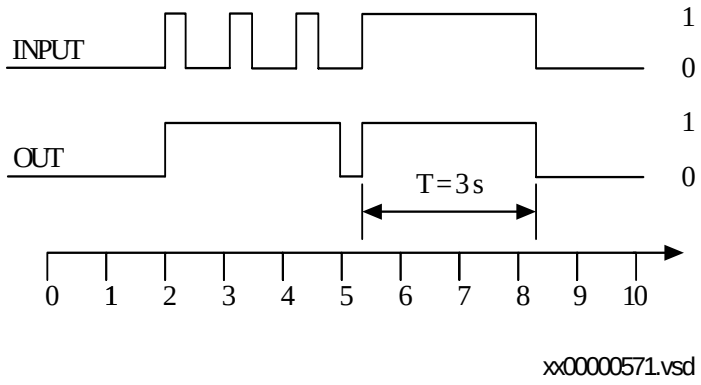

Figure 16: Example of time diagram for the pulse function with preset pulse length T = 3 s

5.2.8 Exclusive OR (XOR)

The function block exclusive OR (XOR) is used to generate combinatory expressions with boolean variables. XOR (figure 17) has two inputs, designated XOnn-INPUTm, where nn presents the serial number of the block, and m presents the serial number of the inputs in the block. Each XOR circuit has two outputs, XOnn-OUT and XOnn-NOUT (inverted). The output signal (OUT) is 1 if the input signals are different and 0 if they are equal.

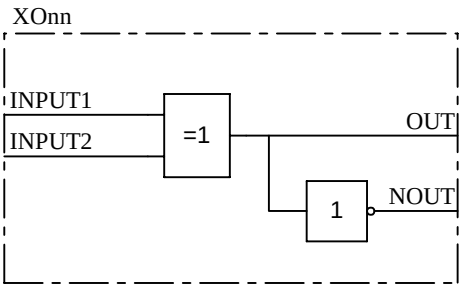

Figure 17: Function block diagram of the XOR function

The output signal (OUT) is set to 1 if the input signals are different and to 0 if they are equal. See truth table below.

Table 5: Truth table for the XOR function block

INPUT1	INPUT2	OUT	NOUT
0	0	0	1
0	1	1	0
1	0	1	0
1	1	0	1

5.2.9 Set-Reset (SR)

The function block Set-Reset (SR) (figure 18) has two inputs, designated SRnn-SET and SRnn-RESET, where nn presents the serial number of the block. Each SR circuit has two outputs, SRnn-OUT and SRnn-NOUT (inverted). The output (OUT) is set to 1 if the input (SET) is set to 1 and if the input (RESET) is 0. If the reset input is set to 1, the output is unconditionally reset to 0.

Table 6: Truth table for the Set-Reset (SR) function block

S	R	OUT	NOUT
1	0	1	0
0	1	0	1
1	1	0	1
0	0	0	1

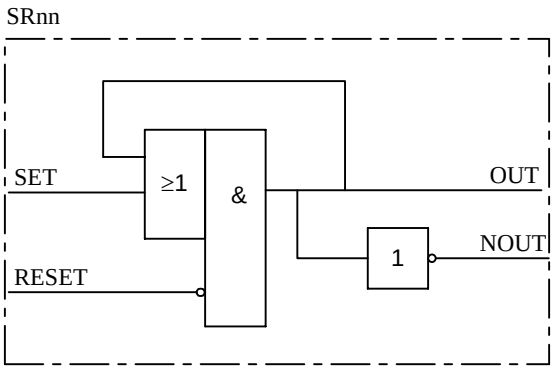

Figure 18: Function block diagram of the Set-Reset function

5.2.10 Set-Reset with/without memory (SM)

The function block Set-Reset (SM) (figure 19) with/without memory has two inputs, designated SMnn-SET and SMnn-RESET, where nn presents the serial number of the block. Each SM circuit has two outputs, SMnn-OUT and SMnn-NOUT (inverted). The output (OUT) is set to 1 if the input (SET) is set to 1 and if the input (RESET) is 0. If the reset input is set to 1, the output is unconditionally reset to 0. The memory setting controls if the flip-flop after a power interruption will return to the state it had before or if it will be reset.

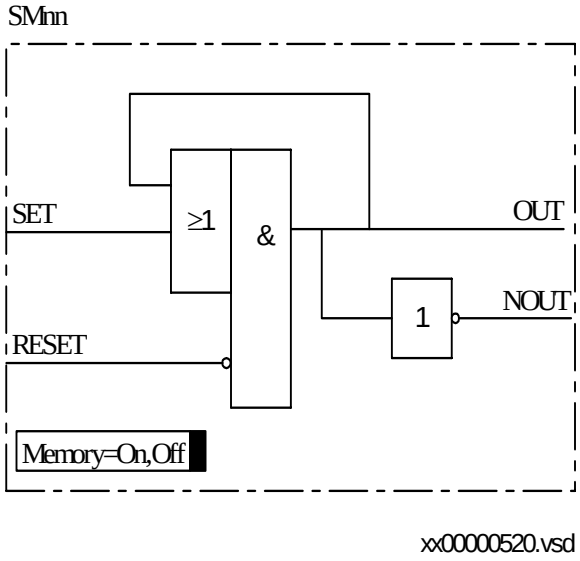

Figure 19: Function block diagram of the Set-Reset with/without memory function

5.3 Calculations

For the AND gates, OR gates, inverters, normal SR (Set-Reset) flip-flops, XOR gates and MOVE elements no settings exist.

For the normal On/Off delay timers and pulse timers the time delays and pulse lengths are set from the CAP configuration tool.

Both timers in the same logic block (the one delayed on pick-up and the one delayed on drop-out) always have a common setting value. Setting values of the pulse length are independent of one another for all pulse circuits.

For the controllable gates, settable timers, SR flip-flops with/without memory the setting parameters are accessible through the HMI and SMS.

Configuration

The configuration of the logics is performed from the CAP configuration tool.

Execution of functions as defined by the configurable logic blocks runs in a fixed sequence in two different cycle times, typical 6 ms and 200 ms.

For each cycle time, the function block is given an execution serial number. This is shown when using the CAP configuration tool with the designation of the function block and the cycle time, for example, TMnn-(1044, 6). TMnn is the designation of the function block, 1044 is the execution serial number and 6 is the cycle time.

Execution of different function blocks within the same cycle follows the same order as their execution serial numbers. Always remember this when connecting in series two or more logical function blocks. When connecting function blocks with different cycle times, the MOVE function blocks can be used. These function blocks synchronize boolean signals sent between logics with slow execution time and logics with fast execution time. The MOVE functions are available as additional configurable logic circuits.

Note!

Always be careful when connecting function blocks with a fast cycle time to function blocks with a slow cycle time.

So design the logic circuits carefully and check always the execution sequence for different functions. In other cases, additional time delays must be introduced into the logic schemes to prevent errors, for example, race between functions.

6 Self supervision with internal event recorder (INT)

6.1 Application

The REx 5xx protection and control terminals have a complex design with many included functions. The included self-supervision function and the INTernal signals function block provide good supervision of the terminal. The different safety measures and fault signals makes it easier to analyze and locate a fault.

Both hardware and software supervision is included and it is also possible to indicate possible faults through a hardware contact on the PSM and/or through the software communication.

Internal events are generated by the built-in supervisory functions. The supervisory functions supervise the status of the various modules in the terminal and, in case of failure, a corresponding event is generated. Similarly, when the failure is corrected, a corresponding event is generated.

Apart from the built-in supervision of the various modules, events are also generated when the status changes for the:

- built-in real time clock (in operation/out of order).
- external time synchronization (in operation/out of order).

Events are also generated:

- whenever any setting in the terminal is changed.
- when the content of the Disturbance report is erased.

The internal events are time tagged with a resolution of 1 ms and stored in a list. The list can store up to 40 events. The list is based on the FIFO principle, that is, when it is full, the oldest event is overwritten. The list cannot be cleared and its content cannot be modified.

The list of internal events provides valuable information, which can be used during commissioning and fault tracing.

The information can only be retrieved with the aid of the SMS. The PC can be connected either to the port at the front or at the rear of the terminal.

6.2 Functionality

The self-supervision status can be monitored from the local HMI or via the PST Parameter Setting Tool or a SMS/SCS system.

Under the Terminal Report menu in the local HMI the present information from the self-supervision function can be viewed. A detailed list of supervision signals that can be generated and displayed in the local HMI is found in the Installation and Commissioning Manual.

In the PST under Terminal Report these summary signals are available:

- InternalStatus
- CPU-Status

When an internal fault has occurred, extensive information about the fault from the list of internal events can be retrieved from the PST under the menu Terminal Report - Internal Events.

A self-supervision summary can be obtained by means of the potential free alarm contact located on the power supply module. The function of this output relay is an OR-function between the INT--FAIL signal (figure 22) and a couple of more severe faults that can happen in the terminal (figure 21).

Some signals are available from the function block InternSignals (INT), see figure 20. The signals from this function block can be connected to an Event function block, which generates and sends these signals as events to the station level of the control system. The signals from the INT-function block can also be connected to binary outputs for signalization via output relays or they can be used as conditions for other functions if required/desired.

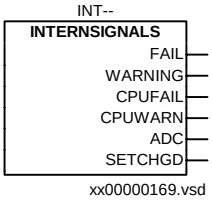

Figure 20: Function block INTernal signals.

Individual error signals from I/O modules and time synchronization can be obtained from respective function block of IOM-, BIM-, BOM-, MIM-, IOPSM-modules and from the time synchronization block TIME.

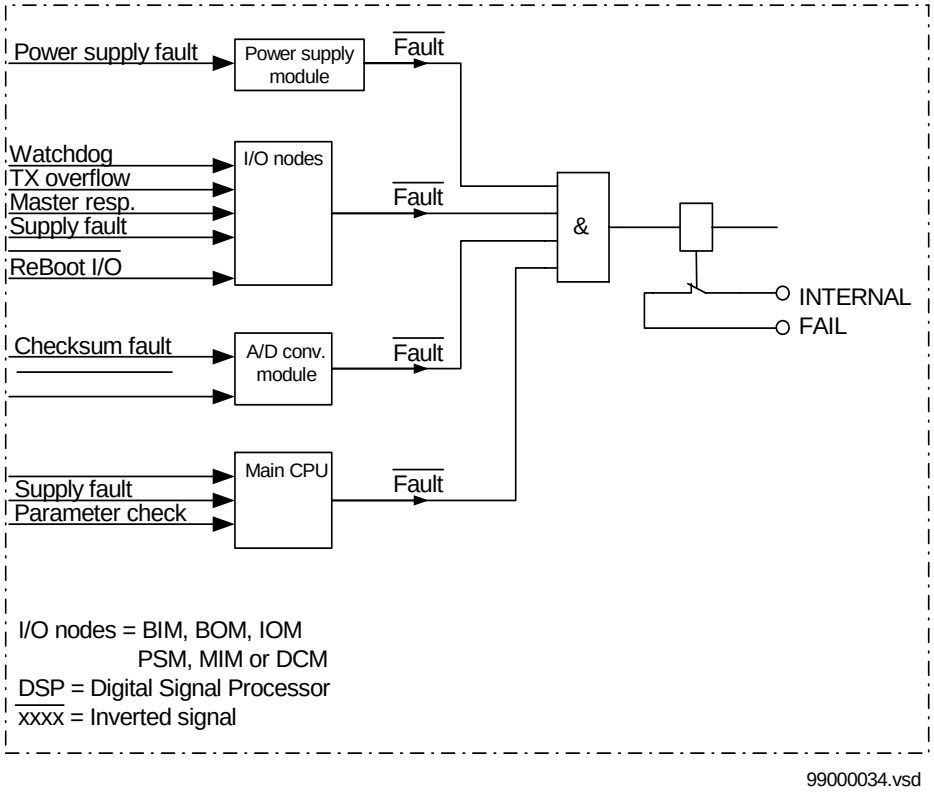

Figure 21: Hardware self-supervision, potential-free alarm contact.

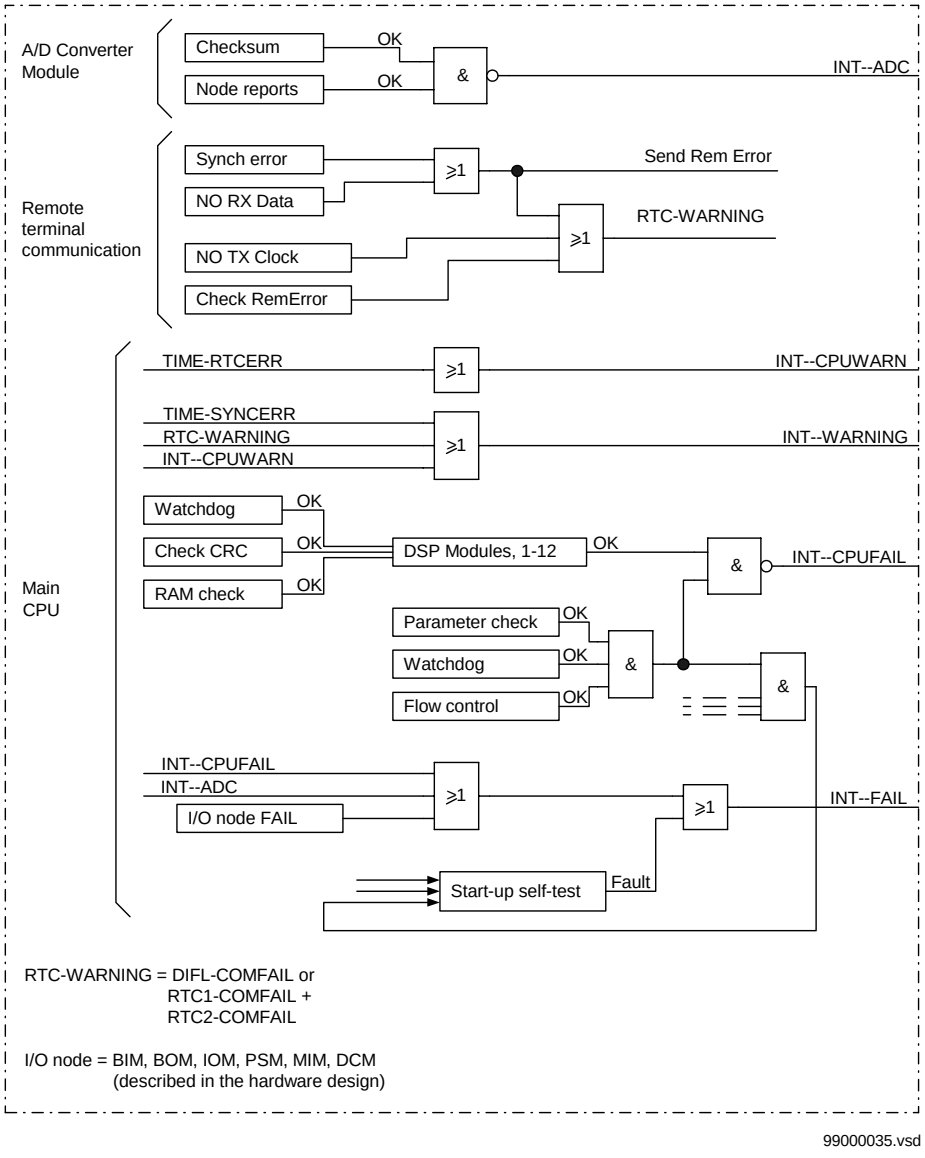

Figure 22: Software self-supervision, function block INTernal signals.

7 Blocking of signals during test (BST)

7.1 Functionality

This blocking function is only active during operation in the test mode, see example in figure 23. When exiting the test mode, entering normal mode, this blocking is disabled and everything is set to normal operation. All testing will be done with actually set and configured values within the terminal. No settings etc. will be changed. Thus no mistakes are possible.

The blocked functions will still be blocked next time entering the test mode, if the blockings were not reset.

The blocking of a function concerns all output signals from the actual function, so no outputs will be activated.

Each of the terminal related functions is described in detail in the documentation for the actual unit. The description of each function follows the same structure (where applicable).

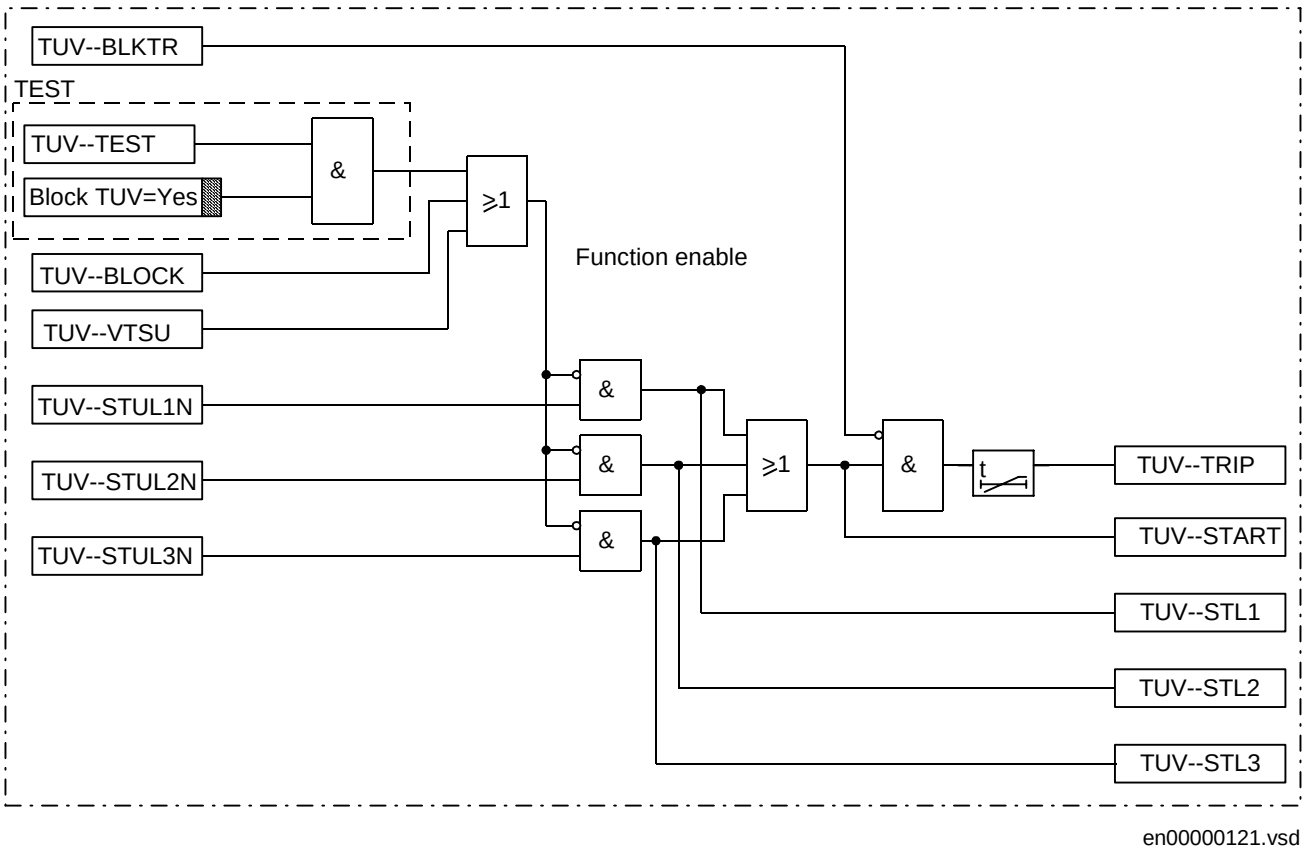

Figure 23: Example of blocking the Time delayed Under-Voltage function.

Chapter 4 Power system supervision

About this chapter

This chapter describes the power system supervision functions.

1 Dead line detection (DLD)

1.1 Application

The dead-line detection function (DLD) detects the disconnected phase(s) of a protected object. The output information serves as an input condition for some other measuring functions within the REx 5xx terminals. Typical examples of such functions are:

- Fuse failure supervision function (FUSE)
- Switch-onto-fault function (SOTF)

For this reason, always configure the DLD--START output signal to the corresponding inputs of the above functions.

1.2 Design

Figure 24 presents a simplified logic diagram of the function. Phase L1, L2 and L3 currents and voltages are measured by one of the built-in digital signal processors. Logical signals STMILn become logical one, if the measured current in the corresponding phase (n = 1..3) decreases under the set operating level.

Logical signals STULnN become logical one, if the measured voltage in the corresponding phase (n = 1..3) decreases under the set operating level.

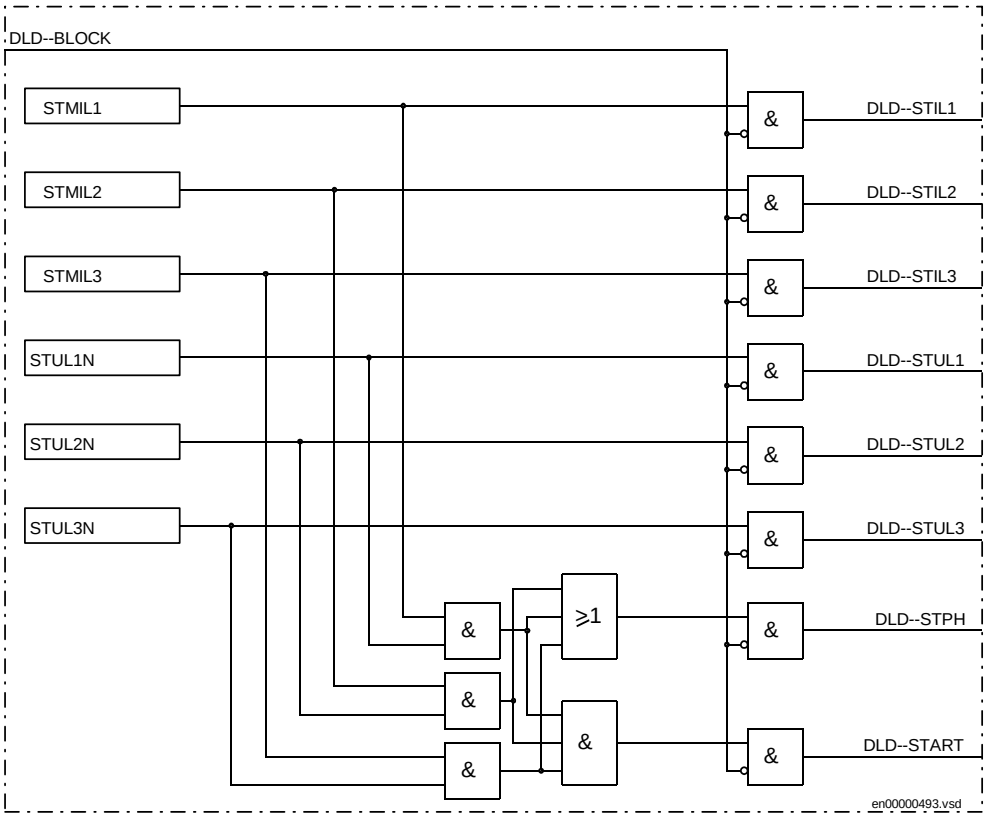

Figure 24: DLD - simplified logic diagram of the dead line detection function

Corresponding phase starting output signals DLD--STILn and DLD--STULn become in this case logical one, if the function is not blocked by the logical one on DLD--BLOCK functional input.

Simultaneous operation of current and voltage measuring elements in one phase is a necessary condition for the determination of a “dead-phase” condition. This condition is presented by the activation of a DLD--STPH output signal.

A complete line is determined as a “dead-line”, when the voltages and the currents in all three phases decrease under the set operate values. A DLD--START output informs about this operating condition.

1.3 Calculations

1.3.1 Setting instructions

The parameters for the dead line detection function are set via the local HMI or PST (Parameter Setting Tool). Refer to the Technical reference manual for setting parameters and path in local HMI.

Set the minimum operate voltage UP< (phase value) with a sufficient margin (at least 15%) under the minimum expected system operate voltage.

Set the minimum operate current with sufficient margin (15 - 20%) under the minimum expected load current. In many cases the minimum load current of a line is close to 0 or even 0. In such cases a setting must be chosen so that signals DLD-STILn are given during normal operation. The operate value must however acceed the maximum charging current of an overhead line, when only one phase is disconnected (mutual coupling to the other phases).

Chapter 5 Secondary system supervision

About this chapter

This chapter describes the secondary system supervision functions.

1 Fuse failure supervision (FUSE)

1.1 Application

Different protection functions within the REx 5xx protection, control and monitoring terminals operate on the basis of the measured voltage in the relay point. Examples are: distance protection function, undervoltage measuring function and voltage check for the weak infeed logic.

These functions can operate unnecessarily if a fault occurs in the secondary circuits between the voltage instrument transformers and the terminal.

It is possible to use different measures to prevent such unwanted operations. Miniature circuit breakers in the voltage measuring circuits, located as close as possible to the voltage instrument transformers, are one of them. Separate fuse-failure monitoring relays or elements within the protection and monitoring devices are another possibilities. These solutions are combined to get the best possible effect in the fuse failure supervision function (FUSE) of REx 5xx terminals.

The fuse-failure supervision function as built into the REx 5xx terminals can operate on the basis of external binary signals from the miniature circuit breaker or from the line disconnector. The first case influences the operation of all voltage-dependent functions while the second one does not affect the impedance measuring functions.

The zero sequence detection algorithm, based on the zero sequence measuring quantities, a high value of voltage $3 \cdot U_0$ without the presence of the residual current $3 \cdot I_0$, is recommended for terminals used in directly or low impedance earthed networks.

1.2 Functionality

1.2.1 Zero sequence

The current and voltage measuring elements within one of the built-in digital signal processors continuously measure the currents and voltages in all three phases and calculate:

- The zero-sequence current 3·I0
- The zero-sequence voltage 3·U0

comparing them with their respective set values 3I0< and 3U0>.

Fourier's recursive filter filters the current and voltage signals, and a separate trip counter prevents high overreaching of the measuring elements. The signal STZERO is set to 1, if the zero sequence measured voltage exceeds its set value 3U0> and if the zero sequence measured current does not exceed its pre-set value 3I0<.

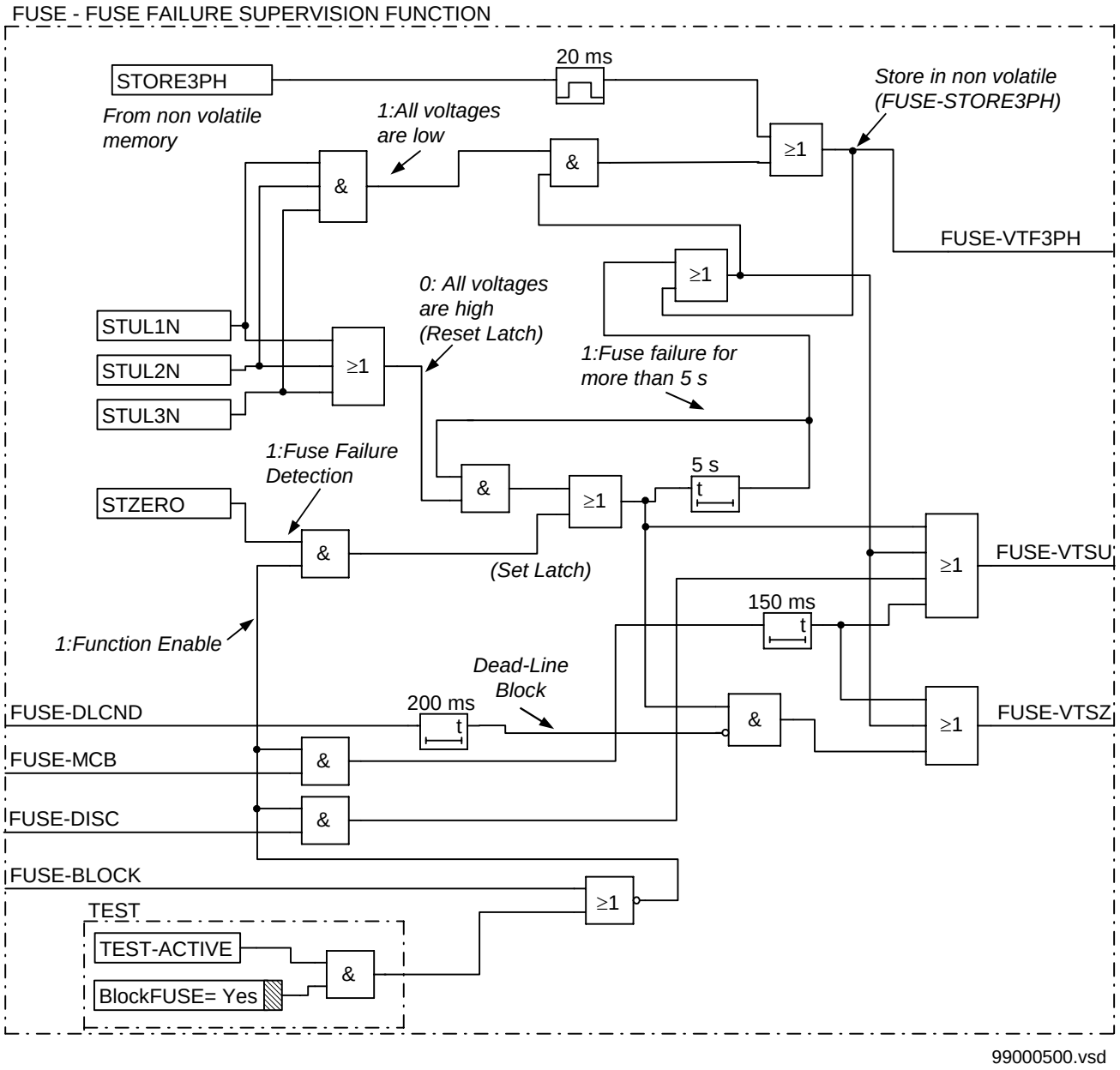

Figure 25: Simplified logic diagram for fuse failure supervisione function, zero sequence based

1.2.2 Logic

Signals STUL1N, STUL2N and STUL3N are related to phase to earth voltages and become 1 when the respective phase voltage is lower than the set value. The set value (U<) is chosen in the dead line detection function, that is always present in the terminal when the fuse failure supervision is present.

The fuse failure supervision function is disabled (blocked) if:

- The terminal is in TEST status (TEST-ACTIVE is high) and the function has been blocked from the HMI (BlockFUSE=Yes)
- The input signal FUSE-BLOCK is high

The FUSE-BLOCK signal is a general purpose blocking signal of the fuse failure supervision function. It can be connected to a binary input of the terminal in order to receive a block command from external devices or can be software connected to other internal functions of the terminal itself in order to receive a block command from internal functions. Through OR gate it can be connected to both binary inputs and internal function outputs.

Function input signal FUSE-MCB is to be connected via a terminal binary input to the N.C. auxiliary contact of the miniature circuit breaker protecting the VT secondary circuit.

Function input signal FUSE-DISC is to be connected via a terminal binary input to the N.C. auxiliary contact of the line disconnector.

The function output FUSE-VTSU can be used for blocking the voltage related measuring functions (undervoltage protection, synchrocheck etc.) except for the impedance protection.

Function output FUSE-VTSZ can be used for blocking the impedance protection function.

The FUSE-MCB signal sets the output signals FUSE-VTSU and FUSE-VTSZ in order to block all the voltage related functions when the MCB is open. The additional drop-off timer of 150 ms prolongs the presence of FUSE-MCB signal to prevent the unwanted operation of voltage dependent function due to non simultaneous closing of the main contacts of the miniature circuit breaker.

The FUSE-DISC signal sets the output signal FUSE-VTSU in order to block the voltage related functions when the line disconnector is open. The impedance protection function is not affected by the position of the line disconnector.

The function input signal FUSE-DLCND is related to the dead line condition detection. It has to be connected to the output signal of the dead line condition function DLD-STPH (dead phase condition detected). This signal is activated from the dead line condition function when the voltage and the current in at least one phase are below their respective setting values. It prevents the blocking of the impedance protection by a fuse failure detection during dead line condition (that occurs also during single pole auto-reclosing). The 200 ms drop-off timer prolongs the dead line condition after the line-energization in order to prevent the blocking of the impedance protection for unequal pole closing.

If a fuse failure condition is detected, the signal FUSE-VTSU is turned high, and if there is no dead line condition also FUSE-VTSZ is high. If the fuse failure condition remains for more then five seconds and at least one of the phases has a low phase to earth voltage, then the fuse failure condition is latched.

The output signal FUSE-VTF3PH is high if the fuse failure condition is detected for 5 seconds and all the three measured voltages are low (STUL1N = STUL2N = STUL3N = 1).

Fuse failure condition is unlatched when the normal voltage conditions are restored (STUL1N = STUL2N = STUL3N = 0).

Fuse failure condition is stored in the non volatile memory of the terminal. In the new start-up procedure the terminal checks the VTF3PH (STORE3PH) value in its non volatile memory and establishes the corresponding starting conditions.

1.3 Calculations

The operating value for the voltage check functionare set via the local HMI or PST (Parameter Setting Tool). Refer to the Technical reference manual for setting parameters and path in local HMI.

1.3.1 Zero sequence function

The zero sequence voltages and currents always exist due to different non-symmetries in the primary system and differences in the current and voltage instrument transformers. The minimum value for the operation of the current and voltage measuring elements must always be set with a safety margin of 10 to 15%, depending on the system operating conditions.

Pay special attention to the dissymmetry of the measuring quantities when the function is used on longer untransposed lines, on multi circuit lines and so on.

1.3.2 Setting of zero sequence voltage 3U0>

The relay setting value 3U0> is given in percentage of the secondary base voltage value, U1b, associated to the voltage transformer input U1. If Us_{SEC} is the secondary setting value of the relay, then the value for 3U0> is given from equation 9.

$$3U0> = \frac{Us_{SEC}}{U1b} \cdot 100$$

(Equation 9)

The parameters for the fuse failure supervision function are set via the local HMI or PST (Parameter Setting Tool). Refer to the Technical reference manual for setting parameters and path in local HMI.

1.3.3 Setting of zero sequence current 3I0<

The relay setting value 3I0< is given in percentage of the secondary base current value, I1b, associated to the current transformer input I1. If Is_{SEC} is the secondary setting value of the relay, then the value for 3I0< is given from equation 10.

$$3I0< = \frac{Is_{SEC}}{I1b} \cdot 100$$

(Equation 10)

Chapter 6 Control

About this chapter

This chapter describes the control functions.

1 Synchrocheck and energizing check (SYN)

1.1 Application

1.1.1 Synchrocheck, general

The synchrocheck function is used for controlled closing of a circuit in an interconnected network. When used, the function gives an enable signal at satisfied voltage conditions across the breaker to be closed. When there is a parallel circuit established, the frequency is normally the same at the two sides of the open breaker. At power swings, e.g. after a line fault, an oscillating difference can appear. Across the open breaker, there can be a phase angle and a voltage amplitude difference due to voltage drop across the parallel circuit or circuits. The synchro-check function measures the difference between the U-line and the U-bus, regarding voltage (UDiff), phase angle (PhaseDiff), and frequency (FreqDiff). It operates and permits closing of the circuit breaker when the following conditions are simultaneously fulfilled:

- The voltages U-line and U-bus are higher than the set value for UHigh of the base voltage U1b.
- The differences in the voltage and phase angles are smaller than the set values of UDiff and PhaseDiff.
- The difference in frequency is less than the set value of FreqDiff. The bus frequency must also be within a range of +/-5 Hz from the rated frequency.

Note!

Phase-phase voltage (110 V or 220 V) can not be connected directly to an individual input voltage transformer. The individual transformer is designed for phase-neutral voltage (U_r = 63.5 V or U_r = 127 V).

The function can be used as a condition to be fulfilled before the breaker is closed at manual closing and/or together with the auto-recloser function.

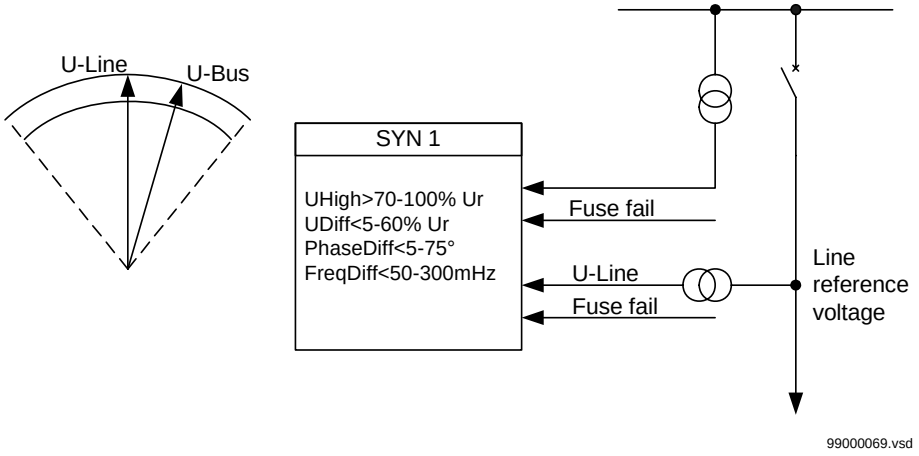

Figure 26: Synchrocheck.

1.1.2 Synchrocheck, single circuit breaker

The voltage circuits are arranged differently depending on the number of synchrocheck functions that are included in the terminal.

In terminals intended for one bay the U-line voltage reference phase is selected on the human-machine interface (HMI). The reference voltage can be phase-neutral L1, L2, L3 or phase-phase voltage L1-L2, L2-L3, L3-L1. The U-bus voltage must then be connected to the same phase or phases as are chosen on the HMI. Figure 27 shows the voltage connection.

In terminals intended for several bays, all voltage inputs are single phase circuits. The voltage can be selected for single phase or phase-to-phase measurement on the HMI. All voltage inputs must be connected to the same phase or phases.

The circuit breaker can be closed when the conditions for FreqDiff, PhaseDiff, and UDiff are fulfilled with the UHigh condition.

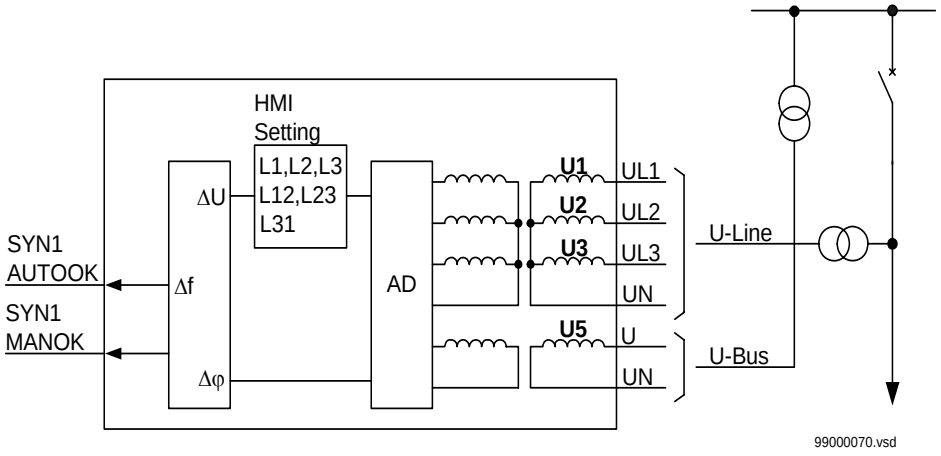

Figure 27: Connection of the synchrocheck function for one bay.

1.1.3 Energizing check, general

The energizing check is made when a disconnected line is to be connected to an energized section of a network, see figure 28. The check can also be set to allow energization of the busbar or in both directions.

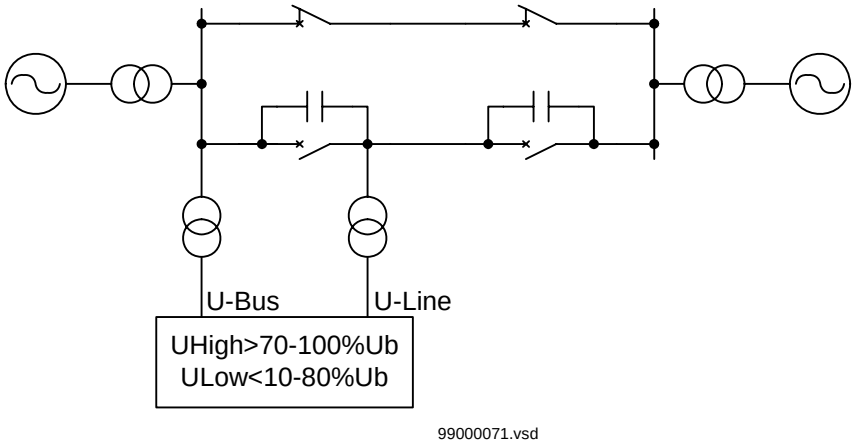

Figure 28: Principle for energizing check.

An energizing can occur, depending on:

- the set direction of the energizing function
- the set limit for energized (live - UHigh) condition
- the set limit for non-energized (dead - Ulow) condition

The equipment is considered energized if the voltage is above the set value UHigh (e.g. 80% of the base voltage), and non-energized if it is below the set value, ULow (e.g. 30% of the base voltage). The user can set the UHigh condition between 70-100% U1b and the ULow condition between 10-80% U1b.

A disconnected line can have a considerable potential due to, for instance, induction from a line running in parallel, or by being fed via the extinguishing capacitors in the circuit breakers. This voltage can be as high as 30% or more of the rated voltage of the line.

The energizing operation can be set to operate in either direction over the circuit breaker, or it can be permitted to operate in both directions. Use the AutoEnerg and ManEnerg HMI setting to select the energizing operation in:

- Both directions (Both)
- Dead line live bus (DLLB)
- Dead bus live line (DBLL)

The voltage check can also be set Off. A closing impulse can be issued to the circuit breaker if one of the U-line or U-bus voltages is High and the other is Low, that is, when only one side is energized. The user can set AutoEnerg and ManEnerg to enable different conditions during automatic and manual closing of the circuit breaker.

In the manual mode it is also possible to allow closing when both sides of the breaker are dead. This is done by setting the parameter ManDBDL = “On” and ManEnerg to “DLLB”, “DBLL” or “Both”.

1.1.4 Voltage selection, single circuit breaker

The voltage selection function is used for the synchrocheck and energizing check functions. When the terminal is used in a double bus, the voltage that should be selected depends on the status of the breakers and/or disconnectors. By checking the status of the disconnectors and/or breakers auxiliary contacts, the terminal can select the right voltage for the synchrocheck and energizing check functions. Select the type of voltage selection from the synchrocheck, Uselection, SingleBus or DoubleBus on the HMI. When using voltage selection, some extra binary inputs are required.

The configuration of internal signal inputs and outputs may be different for different busbar systems, and the actual configuration for the substation must be done during engineering of the terminal.

1.1.5 Voltage connection for a single bus and single bay

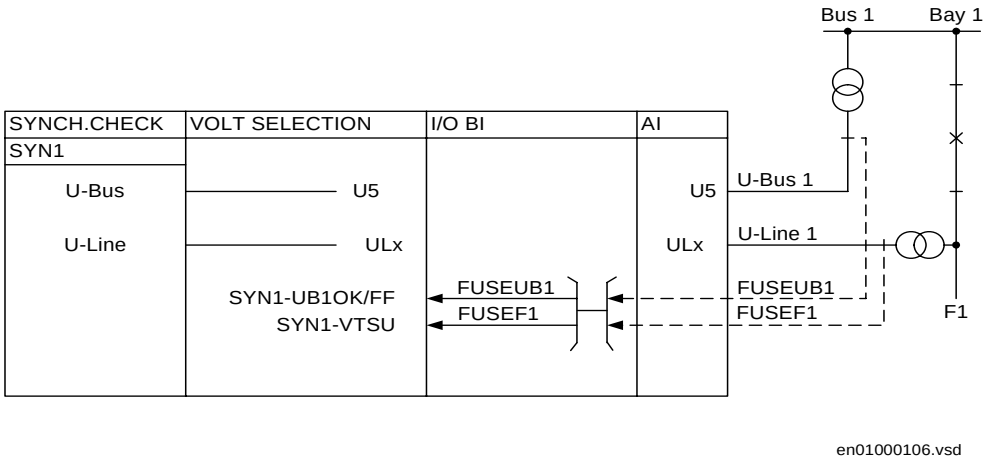

Figure 29: Voltage connection in a single busbar arrangement.

Single bus is selected on the HMI. Figure 29 shows the principle for the connection arrangement. One terminal unit is used for one bay. For the synchrocheck (SYN1) and energizing check function, there is one voltage transformer at each side of the circuit breaker. The voltage transformer circuit connections are straight forward, no special voltage selection is needed.

For the synchrocheck and energizing check, the voltage from Bus 1 (U-Bus 1) is connected to the single phase analogue input (U5) on the terminal unit.

The line voltage (U-line 1) is connected as a three-phase voltage to the analog inputs UL1, UL2, UL3 (ULx).

Fuse failure and Voltage OK signals, single bus and single bay

The external fuse-failure signals or signals from a tripped fuse switch/MCB are connected to binary inputs that are configured to inputs of the synchrocheck functions in the terminal. There are two alternative connection possibilities. Inputs named OK must be supplied if the voltage circuit is healthy. Inputs named FF must be supplied if the voltage circuit is faulty.

The SYN1-UB1OK and SYN1-UB1FF inputs are related to the busbar voltage. Configure them to the binary inputs that indicate the status of the external fuse failure of the busbar voltage. The SYN1-VTSU input is related to the line voltage.

The user can use the FUSE-VTSU signal from the built-in optional fuse-failure function as an alternative to the external fuse-failure signals.

In case of a fuse failure, the energizing check (dead line-check) is blocked via the inputs (SYN1-UB1OK/FF or SYN1-VTSU).

1.1.6 Voltage selection for a double bus and single bay

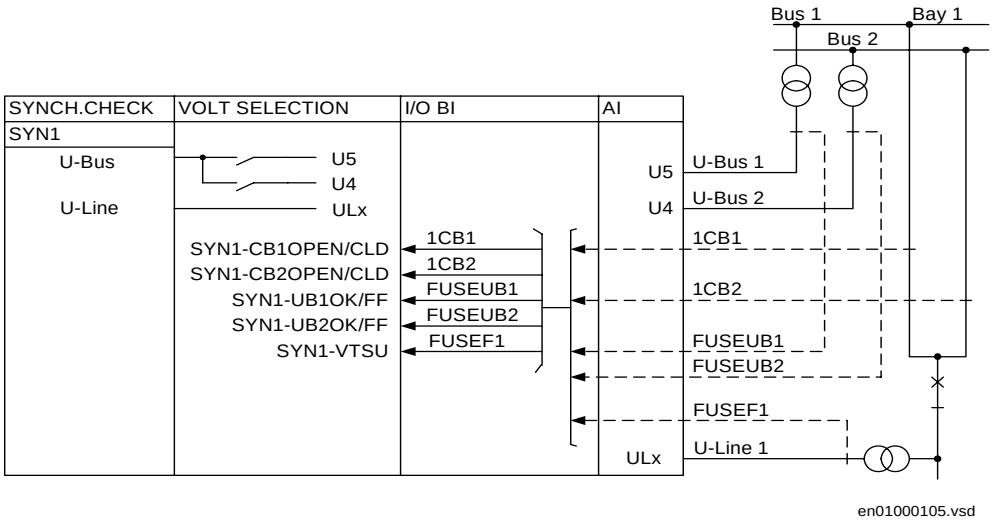

Figure 30: Voltage selection in a double bus arrangement.

Select DbleBus on the HMI. Figure 30 shows the principle for the connection arrangement. One terminal is used for one bay. For the synchrocheck (SYN1) and energizing check function, the voltages on the two busbars are selected by the voltage selection in the terminal unit. The bus voltage from Bus 1 is fed to the U5 analog single-phase input, and the bus voltage from Bus 2 is fed to the U4 analog single-phase input. The line voltage transformers are connected as a three-phase voltage UL1, UL2, UL3 (ULx) to the input U-line 1.

The selection of the bus voltage is made by checking the position of the disconnectors' auxiliary contacts connected via binary inputs of the voltage selection logic inputs, SYN1-CB1OPEN (Disconnector section 1 open), SYN1-CB1CLD (Disconnector section 1 closed) and SYN1-CB2OPEN (Disconnector section 2 open), SYN1-CB2CLD (Disconnector section 2 closed).

Fuse failure and Voltage OK signals, double bus and single bay

The external fuse-failure signals or signals from a tripped fuse switch/MCB are connected to binary inputs configured to inputs of the synchro-check functions in the terminal. There are two alternative connection possibilities. Inputs named OK must be supplied if the voltage circuit is healthy. Inputs named FF must be supplied if the voltage circuit is faulty.

The SYN1-UB1(2)OK and SYN1-UB1(2)FF inputs are related to each busbar voltage. The SYN1-VTSU input is related to the line voltage. Configure them to the binary inputs that indicate the status of the external fuse failure of the busbar respectively the line voltage. Only the fuse failure of a selected voltage causes a blocking of the relevant energizing check unit.

The user can use the FUSE-VTSU signal from the built-in optional selectable fuse-failure function as an alternative to the external fuse-failure signals.

In case of a fuse failure, the energizing check (dead line-check) is blocked via the inputs (SYN1-UB1OK/FF, SYN1-UB2OK/FF or SYN1-VTSU).

1.2 Functionality

1.2.1 Single circuit breaker

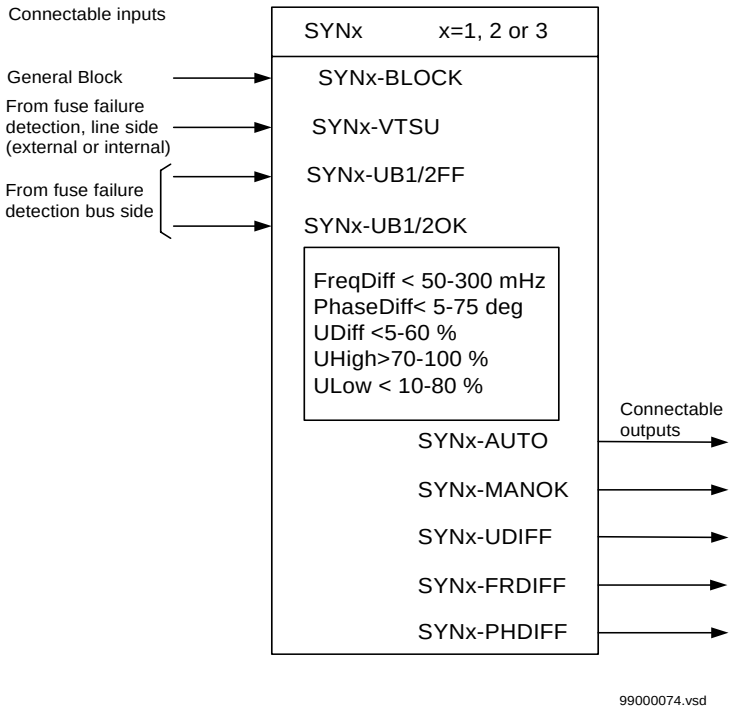

Figure 31: Input and output signals.

1.2.2 Synchrocheck

Description of input and output signals for the synchrocheck function.

Input signals	Description
SYNx-BLOCK	General block input from any external condition, that should block the synchro-check.

Input signals	Description
SYNx-VTSU	The synchrocheck function cooperates with the FUSE-VTSU connected signal, which is the built-in optional fuse failure detection. It can also be connected to external condition for fuse failure. This is a blocking condition for the energizing function.
SYNx-UB1FF	External fuse failure input from busbar voltage Bus 1 (U5). This signal can come from a tripped fuse switch (MCB) on the secondary side of the voltage transformer. In case of a fuse failure the energizing check is blocked.
SYNx-UB1OK	No external voltage fuse failure (U5). Inverted signal.
SYNx-UB2FF	External fuse failure input from busbar voltage Bus 2 (U4). This signal can come from a tripped fuse switch (MCB) on the secondary side of the voltage transformer. In case of a fuse failure the energizing check is blocked.
SYNx-UB2OK	No external voltage fuse failure (U4). Inverted signal.

Output signals	Description
SYNx-AUTOOK	Synchrocheck/energizing OK. The output signal is high when the synchrocheck conditions set on the HMI are fulfilled. It can also include the energizing condition, if selected. The signal can be used to release the auto-recloser before closing attempt of the circuit breaker. It can also be used as a free signal.
SYNx-MANOK	Same as above but with alternative settings of the direction for energizing to be used during manual closing of the circuit breaker.
SYNx-UDIFF	Difference in voltage is less than the set difference limit.
SYNx-FRDIFF	Difference in frequency is less than the set difference limit.
SYNx-PHDIFF	Difference in phase angle is less than the set difference limit.

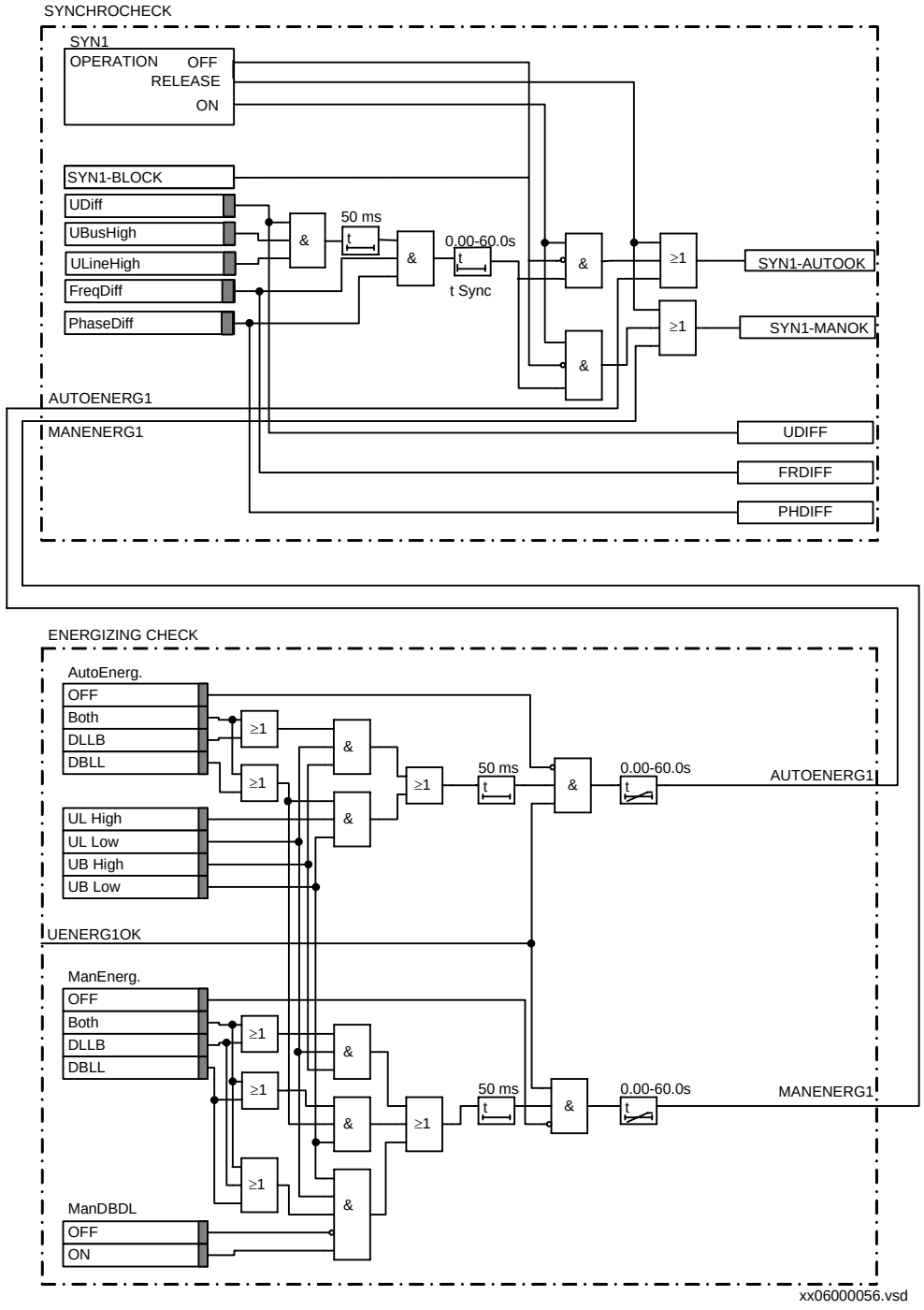

Figure 32: Simplified logic diagram - Synchrocheck and energizing check. The internal signal UENERG1OK refers to the voltage selection logic.

1.2.3 Voltage selection

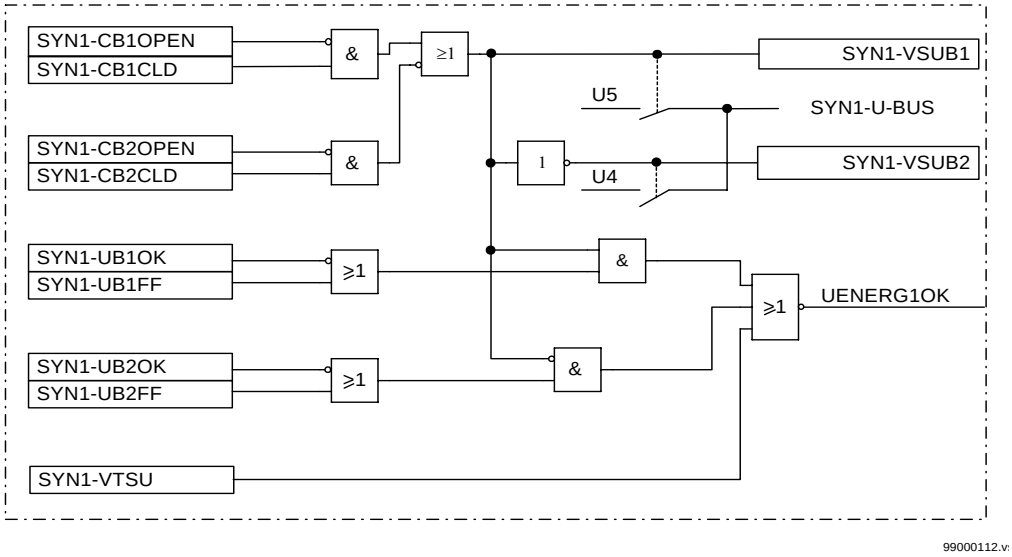

Figure 33: Voltage selection logic in a double bus, single breaker arrangement. In case of three bay arrangement the 1 in SYN1 and UENERG1OK are replaced by 2 and 3 in the logic.

Description of the input and output signals shown in the above simplified logic diagrams for voltage selection:

Input signal	Description
SYNx-CB1OPEN	Disconnector section of Bay x open. Connected to the auxiliary contacts of a disconnector section in a double-bus, single- breaker arrangement, to inform the voltage selection about the positions.
SYNx-CB1CLD	Disconnector section of Bay x closed. Connected to the auxiliary contacts of a disconnector section in a double-bus, single-breaker arrangement to inform the voltage selection about the positions.
SYNx-CB2OPEN	Same as above but for disconnector section 2.
SYNx-CB2CLD	Same as above but for disconnector section 2.

Input signal	Description
SYNx-UB1FF	External fuse failure input from busbar voltage Bus 1 (U5). This signal can come from a tripped fuse switch (MCB) on the secondary side of the voltage transformer. In case of a fuse failure, the energizing check is blocked.
SYNx-UB1OK	No external voltage fuse failure (U5). Inverted signal.
SYNx-UB2FF	External fuse failure input from busbar voltage Bus 2 (U4). This signal can come from a tripped fuse switch (MCB) on the secondary side of the voltage transformer. In case of fuse failure, the energizing check is blocked.
SYNx-UB2OK	No external voltage fuse failure (U4). Inverted signal.
SYNx-VTSU	Internal fuse failure detection or configured to a binary input indicating external fuse failure of the UL1, UL2, UL3 line-side voltage. Blocks the energizing function.

Output signals	Description
SYNx-VSUB1	Signal for indication of voltage selection from Bus 1 voltage.
SYNx-VSUB2	Signal for indication of voltage selection from Bus 1 voltage.

1.3 Calculations

1.3.1 Settings for single circuit breaker

The parameters for the synchrocheck function are set via the local HMI or PST (Parameter Setting Tool). Refer to the Technical reference manual for setting parameters and path in local HMI.

(The number of Synchro Check functions is dependent of the version)

Comments regarding settings.

1.3.2 Operation

Off/Release/On

Off	The synchrocheck function is disabled and the output is low.
Release	There are fixed, high output signals SYNx-AUTOOK = 1 and SYNx-MANOK = 1.
On	The function is in service and the output signal depends on the input conditions.

1.3.3 Input phase

The measuring phase of the UL1, UL2, UL3 line voltage, which can be of a single-phase (phase-neutral) or two-phases (phase-phase). (Only available in terminals intended for one bay).

1.3.4 UMeasure

Selection of single-phase (phase-neutral) or two-phase (phase-phase) measurement.(Only available in terminals intended for several bays).

1.3.5 PhaseShift

This setting is used to compensate for a phase shift caused by a line transformer between the two measurement points for UBus and ULine. The set value is added to the measured phase difference. The bus voltage is reference voltage.

1.3.6 URatio

The URatio is defined as URatio=UBus/ULine. A typical use of the setting is to compensate for the voltage difference caused if one wishes to connect the UBus phase-phase and ULine phase-neutral. The “Input phase”-setting should then be set to phase-phase and the “URatio”-setting to sqr3=1.732. This setting scales up the line voltage to equal level with the bus voltage.

1.3.7 USelection

Selection of single or double bus voltage-selection logic.

1.3.8 AutoEnerg and ManEnerg

Two different settings can be used for automatic and manual closing of the circuit breaker.

Off	The energizing function is disabled
DLLB	The line voltage U-line is low, below (10-80% U1b) and the bus voltage U-bus is high, above (70-100% U1b).
DBLL	The bus voltage U-bus is low, below (10-80% U1b) and the line voltage U-line is high, above (70-100% U1b).
Both	Energizing can be done in both directions, DLLB or DBLL.
tAutoEnerg	The required consecutive time of fulfillment of the energizing condition to achieve SYN1-AUTOOK.
tManEnerg	The required consecutive time of fulfillment of the energizing condition to achieve SYN1-MANOK.

1.3.9 ManDBDL

If the parameter is set to “On”, closing is enabled when Both U-Line and U-bus are below ULow and ManEnerg is set to “DLLB”, “DBLL” or “Both”.

1.3.10 UHigh and ULow

Two different settings, which define an energize condition, UHigh, and a non-energized condition, ULow, for the line or bus.

1.3.11 FreqDiff, PhaseDiff and UDiff

Three different settings for differences between line and bus regarding frequency, phase angle and voltage respectively.

1.3.12 VTConnection

This setting defines which side, line or bus, that leave three-phase connection of the VT. This setting is available only for single breaker arrangement for one bay.

1.3.13 tSync

Operation delay time of the synchrocheck information.

2 Autorecloser (AR)

2.1 Application

Automatic reclosing (AR) is a well-established method to restore the service of a power line after a transient line fault. The majority of line faults are flashover arcs, which are transient by nature. When the power line is switched off by operation of line protection and line breakers, the arc de-ionises and recovers voltage withstand at a somewhat variable rate. So a certain line dead time is needed. But then line service can resume by the auto-reclosing of the line breakers. Select the length of the dead time to enable good probability of fault arc de-ionisation and successful reclosing.

For the individual line breakers and auto-reclosing equipment, the Auto-reclose open time (AR open time) expression is used. At simultaneous tripping and reclosing at the two line ends, Auto-reclose open time equals approximaltely the dead time of the line. Otherwise these two times may differ.

In case of a permanent fault, the line protection trips again at reclosing to clear the fault.

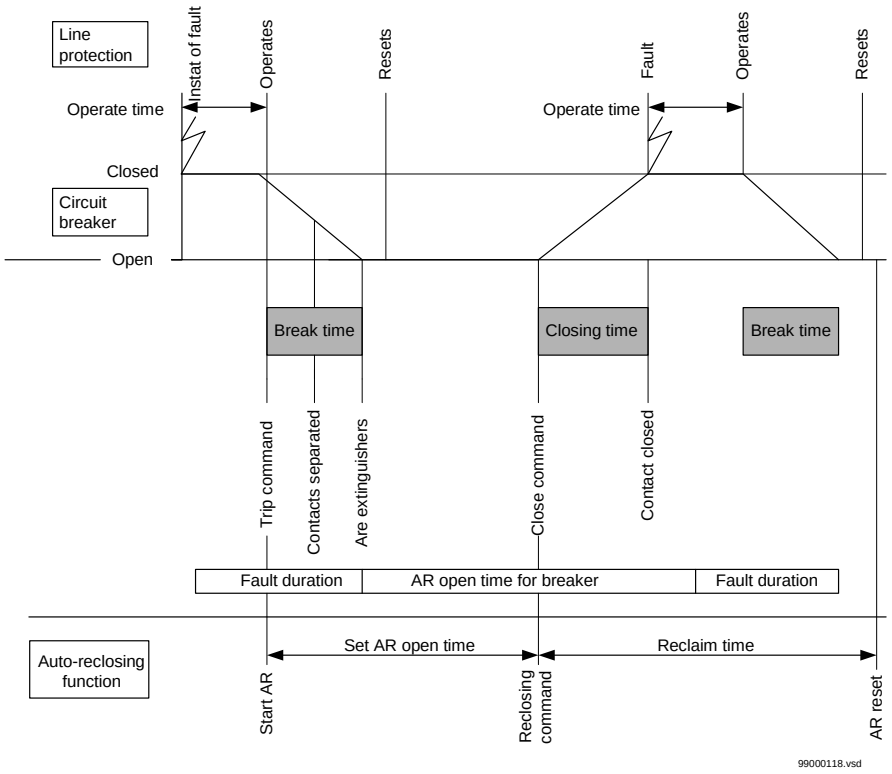

Figure 34: Single-shot auto-reclosing at a permanent fault

In a bay with one circuit breaker only, a terminal is normally provided with one AR function.

Single-phase tripping and single-phase reclosing is a way to limit the effect of a single-phase line fault to system operation. Especially at higher voltages, the majority of line faults are of the single-phase type. The method is of particular value to maintain system stability in systems with limited meshing or parallel routing. It requires individual operation of each phase of the breakers, which is common at the higher transmission voltages.

A somewhat longer dead time may be required at single-phase reclosing compared to high-speed three-phase reclosing, due to influence on the fault arc from voltage and current of the non-tripped phases.

There is also a possibility to trip and reclose two of the circuit breaker poles, in case of faults when two out of the three phases are involved and parallel lines are in service. This type of faults is less common compared to single phase to earth faults, but more common than three phase faults.

In order to maximize the availability of the power system there is a possibility to chose single pole tripping and auto-reclosing at single phase faults, two pole tripping and auto-reclosing at faults involving two phases and three pole tripping and auto-reclosing at three phase faults.

During the single pole open time there will be an equivalent “series”-fault in the system. As a consequence there will be a flow of zero sequence current. Therefor the residual current protections must be co-ordinated with the single pole tripping and auto-reclosing.

The reclosing function can be selected to perform single-phase, two-phase and/or three-phase reclosing from six single-shot to multiple-shot reclosing programs. The three-phase auto-reclose open time can be set to give either high-speed auto-reclosing (HSAR) or delayed auto-reclosing (DAR). In the reclosing programs the delayed auto-reclosing (DAR) is always a three pole trip and reclosing, even if the first high-speed reclosing is a single pole action.

2.2 Functionality

The AR function is a logical function built up from logical elements. It operates in conjunction with the trip output signals from the line protection functions, the OK to close output signals from the synchrocheck and energizing check function, and binary input signals (for circuit breaker position/status, or from other external protection functions).

In the AR logic a number of parameters can be set to adjust the auto-reclosing function to the desired requirements. Examples are:

- Number of AR attempts
- AR programs
- Open times for different AR attempts

2.2.1 AR operation

The mode of operation can be selected by setting the parameter Operation to ON, OFF or Stand-by. ON activates automatic reclosing. OFF deactivates the auto-recloser. Stand-by enables On and Off operation via input signal pulses.

2.2.2 Start and control of the auto-reclosing

The automatic operation of the auto-reclosing function is controlled by the parameter *Operation* and the input signals as described above. When it is on, the AR01-SETON output is high (active). See Function block diagrams.

The auto-reclosing function is activated at a protection trip by the AR01-START input signal. At repeated trips, this signal is activated again to make the reclosing program continue.

There are a number of conditions for the start to be accepted and a new cycle started. After these checks, the start signal is latched in and the *Started* state signal is activated. It can be interrupted by certain events.

2.2.3 Extended AR open time, shot 1

The purpose of this function is to adapt the length of the AR Open time to the possibility of non-simultaneous tripping at the two line ends. If a permissive communication scheme is used and the permissive communication channel (for example, PLC, power-line carrier) is out of service at the fault, there is a risk of sequential non-simultaneous tripping. To ensure a sufficient

line dead time, the AR open time is extended by 0.4 s. The input signal AR01-PLCLOST is checked at tripping. See Function block diagrams. Select this function (or not) by setting the Extended t1 parameter to On (or Off).

2.2.4 Long trip signal

During normal circumstances, the trip command resets quickly due to fault clearing. The user can set a maximum trip pulse duration by tTrip. At a longer trip signal, the AR open dead time is extended by Extend_t1. If the Extended t1 = Off, a long trip signal interrupts the reclosing sequence in the same way as AR01-INHIBIT.

2.2.5 Reclosing programs

The reclosing programs can be performed with up to maximum four reclosing attempts (shots), selectable with the NoOfReclosing parameter. The first program is used at pure 3-phase trips of breakers and the other programs are used at 1-, 2- or 3-phase trips of breakers.

3ph

3-phase reclosing, one to four attempts (NoOfReclosing parameter). The output AR01-P3P is always high (=1).

A trip operation is made as a three-phase trip at all types of fault. The reclosing is as a three-phase reclosing in program 1/2/3ph, described below.

1/2/3ph

1-phase, 2-phase or 3-phase reclosing in the first shot.

For the example, one-shot reclosing for 1-phase, 2-phase or 3-phase, see Figures in Function block diagrams. Here, the AR function is assumed to be On and Ready. The breaker is closed and the operation gear ready (manoeuvre spring charged etc.). Only the 1-phase and 3-phase cases are described.

AR01-START is received and sealed-in at operation of the line protection. The AR01-READY output is reset (Ready for a new AR cycle).

If AR01-TR2P (2-phase trip) is low and AR01-TR3P (3-phase trip) is:

low,	the timer for 1-phase reclosing open time t1 1Ph is started and the AR01-1PT1 output (auto-reclosing 1-phase, shot 1, in progress) is activated. It can be used to suppress Pole disagreement and Earth-fault protection during the 1-phase open interval.
high,	the timer for 3-phase AR open time, t1, is started (instead of t1 1Ph) and AR01-T1 is set (auto-reclosing 3-phase, shot 1, in progress). While either t1 1Ph or t1 is running, the output AR01-INPROGR is activated.

Immediately after the start-up of the reclosing and tripping of the breaker, the input (see Function block diagrams) AR01-CBCLOSED is low (possibly also AR01-CBREADY at type OCO). The AR Open-time timer, t1 1Ph or t1, keeps on running.

At the end of the set AR open time, t1 1Ph or t1, the respective SPTO or TPTO (single-phase or three-phase AR time-out, see Function block diagrams) is activated and goes on to the output module for further checks and to give a closing command to the circuit breaker.

At any kind of trip, the operation is as already described, program 1/2/3ph. If the first reclosing attempt fails, a 3-phase trip will be issued and 3-phase reclosings can follow, if selected. Maximum three additional attempts can be done (according to the NoOfReclosing parameter).

1/2ph

1-phase or 2-phase reclosing in the first shot.

At 1-phase or 2-phase trip, the operation is as in above described example, program *1/2/3ph*. If the first reclosing attempt fails, a 3-phase trip will be issued and 3-phase reclosings can follow, if selected. Maximum three additional attempts can be done (according to the NoOfReclosing parameter).

At 3-phase trip, TR2P low and TR3P high, the AR will be blocked and no reclosing takes place.

1ph + 1*2ph

1-phase or 2-phase reclosing in the first shot.

At 1-phase trip (TR2P low and TR3P low), the operation is as in above described example, program 1/2/3ph. If the first reclosing attempt fails, a 3-phase trip will be issued and 3-phase reclosings can follow, if selected. Maximum three additional attempts can be done (according to the NoOfReclosing parameter).

At 2-phase trip (TR2P high and TR3P low), the operation is similar as above. But, if the first reclosing attempt fails, a 3-phase trip will be issued and the AR will be blocked. No more attempts take place!

At 3-phase trip, TR2P low and TR3P high, the AR will be blocked and no reclosing takes place.

1/2ph + 1*3ph

1-phase, 2-phase or 3-phase reclosing in the first shot.

At 1-phase or 2-phase trip, the operation is as described above. If the first reclosing attempt fails, a 3-phase trip will be issued and 3-phase reclosings can follow, if selected. Maximum three additional attempts can be done (according to the NoOfReclosing parameter).

At 3-phase trip, the operation is similar as above. But, if the first reclosing attempt fails, a 3-phase trip will be issued and the AR will be blocked. No more attempts take place!

1ph + 1*2/3ph

1-phase, 2-phase or 3-phase reclosing in the first shot.

At 1-phase trip, the operation is as described above. If the first reclosing attempt fails, a 3-phase trip will be issued and 3-phase reclosings can follow, if selected. Maximum three additional attempts can be done (according to the NoOfReclosing parameter).

At 2-phase or 3-phase trip, the operation is similar as above. But, if the first reclosing attempt fails, a 3-phase trip will be issued and the AR will be blocked. No more attempts take place!

Table 7: Type of reclosing for different programs

Program	1st attempt	2-4th attempt
3ph	3ph	3ph
1/2/3ph	1ph	3ph
	2ph	3ph
	3ph	3ph
1/2ph	1ph	3ph
	2ph	3ph
	No 3ph reclosing	No 3ph reclosing
1ph + 1*2ph	1ph	3ph
	2ph	No
	No 3ph reclosing	No 3ph reclosing
1/2ph + 1*3ph	1ph	3ph
	2ph	3ph
	3ph	No
1ph + 1*2/3ph	1ph	3ph
	2ph	No
	3ph	No

2.2.6 Blocking of a new reclosing cycle

A new start of a reclosing cycle is blocked for the reclaim time after the selected number of reclosing attempts are performed.

2.2.7 Reclosing checks and Reclaim timer

An AR open-time time-out signal is received from a program module. At three-phase reclosing, a synchro-check and/or energising check or voltage check can be used. It is possible to use an internal or an external synchro-check function, configured to AR01-SYNC. If a reclosing without check is preferred, configure the input AR01-SYNC to FIXD-ON (set to 1).

Another possibility is to set the output from the internal synchro-check function to a permanently active signal. Set Operation = Release in the synchro-check function. Then AR01-SYNC is configured to SYNx-AUTOOK.

At confirmation from the synchro-check or if the reclosing is of single-phase type, the signal passes on.

At AR01-CBREADY signal of the Close-Open (CO) type, it is checked that this signal is present to allow a reclosing.

The synchrocheck and energizing check must be fulfilled within a certain period of time, tSync. If it does not, or if the other conditions are not fulfilled, the reclosing is interrupted and blocked.

The Reclaim-timer defines a period from the issue of a reclosing command, after which the reclosing function is reset. Should a new trip occur within this time, it is treated as a continuation of the first fault. When a closing command is given (Pulse AR), the reclaim timer is started.

There is an AR State Control, see Function block diagrams, to track the actual state in the reclosing sequence.

2.2.8 Pulsing of CB closing command

The circuit breaker closing command, AR01-CLOSECB, is made as a pulse with a duration, set by the tPulse parameter. For circuit breakers without an anti-pumping function, the closing-pulse-cutting described below can be used. It is selected by means of the CutPulse parameter (set to On). In case of a new trip pulse, the closing pulse will be cut (interrupted). But the minimum length of the closing pulse is always 50 ms.

At the issue of a reclosing command, the associated reclosing operation counter is also incremented. There is a counter for each type of reclosing and one for the total number of reclosings. See Function block diagrams.

2.2.9 Transient fault

After the reclosing command, the reclaim timer keeps running for the set time. If no tripping occurs within this time, tReclaim, the auto-reclosing function will be reset. The circuit breaker remains closed and the operating gear ready (manoeuvre spring is recharged). AR01-CBCLOSED = 1 and AR01-CBREADY = 1.

After the reclaim time, the AR state control resets to original rest state, with AR01-SETON = 1, AR01-READY = 1 and AR01-P1P = 1 (depending on the selected program). The other AR01 outputs = 0.

2.2.10 Unsuccessful signal

Normally the signal AR01-UNSUC appears when a new start is received after the last reclosing attempt has been made. See Function block diagrams. It can be programmed to appear at any stage of a reclosing sequence by setting the parameter *UnsucMode* = On. The UNSUC signal is attained after the time tUnsuc.

2.2.11 Permanent fault

If a new trip takes place after a reclosing attempt and a new AR01-START or AR01-TRSOTF signal appears, the AR01-UNSUC (Reclosing unsuccessful) is activated. The timers for the first reclosing attempt (t1 1Ph, t1 2Ph and t1) cannot be started.

Depending on the PulseCut parameter setting, the closing command may be shortened at the second trip command.

After time-out of the reclaim timer, the auto reclosing function resets, but the circuit breaker remains open (AR01-CBCLOSED = 0, AR01-CBREADY = 1). Thus the reclosing function is not ready for a new reclosing cycle. See Function block diagrams and Sequence examples.

2.2.12 Automatic confirmation of programmed reclosing attempts

The auto-recloser can be programmed to continue with reclosing attempts two to four (if selected) even if the start signals are not received from the protection functions, but the breaker is still not closed. See figure in Function block diagrams. This is done by setting the parameter *AutoCont* = On and the wait time *tAutoWait* to desired length.

2.3 Calculations

2.3.1 Configuration and setting

The signals are configured in the CAP configuration tool.

The parameters for the automatic reclosing function are set via the local HMI or PST (Parameter Setting Tool). Refer to the Technical reference manual for setting parameters and path in local HMI.

2.3.2 Recommendations for input signals

See , figure 35 and the default configuration for examples.

AR01-START

Should be connected to the protection function trip output which shall start the auto-recloser. It can also be connected to a binary input for start from an external contact. A logical OR gate can be used to multiply the number of start sources.

AR01-ON and AR01-OFF

May be connected to binary inputs for external control.

AR01-INHIBIT

Can be connected to binary inputs, to block the AR from a certain protection, such as a line connected shunt reactor, transfer trip receive or back-up protection or breaker-failure protection.

AR01-CBCLOSED and AR01-CBREADY

Must be connected to binary inputs, for pick-up of the breaker signals. If the external signals are of Breaker-not-ready type, uncharged etc., an inverter can be configured before CBREADY.

AR01-SYNC

Is connected to the internal synchro-check function if required. It can also be connected to a binary input. If neither internal nor external synchronizing or energizing check (dead line check) is required, it can be connected to a permanent 1 (high), by connection to FIXD-ON.

AR01-PLCLOST

Can be connected to a binary input, when required.

AR01-TRSOTF

Can be connected to the internal line protection, distance protection, trip switch-onto-fault.

AR01-STTHOL

Start of thermal overload protection signal. Can be connected to OVLD-TRIP to block the AR at overload.

AR01-TR2P and AR01-TR3P

Are connected to the function block TRIP or to binary inputs. The protection functions that give two-phase or three-phase trips are supposed to be routed via that function.

Other

The other input signals can be connected as required.

2.3.3 Recommendations for output signals

See , figure 35 and the default configuration for examples.

AR01-READY

Can be connected to the Zone extension of a line protection. It can also be used for indication, if required.

AR01-1PT1 and 2PT1

1-phase and 2-phase reclosing in progress is used to temporarily block an Earth-fault protection and/or a Pole disagreement function during the 1-phase or 2-phase open intervals.

AR01-CLOSECB

Connect to a binary output relay for circuit breaker closing command.

AR01-P3P

Prepare 3-phase trip: Connect to TRIP-P3PTR.

AR01-P1P

Permit 1-phase trip: Can be connected to a binary output for connection to external protection or trip relays. In case of total loss of auxiliary voltage, the output relay drops and does not allow 1-phase trip. If needed to invert the signal, it can be made by a breaking contact of the output relay.

Other

The other output signals can be connected for indication, disturbance recording etc., as required.

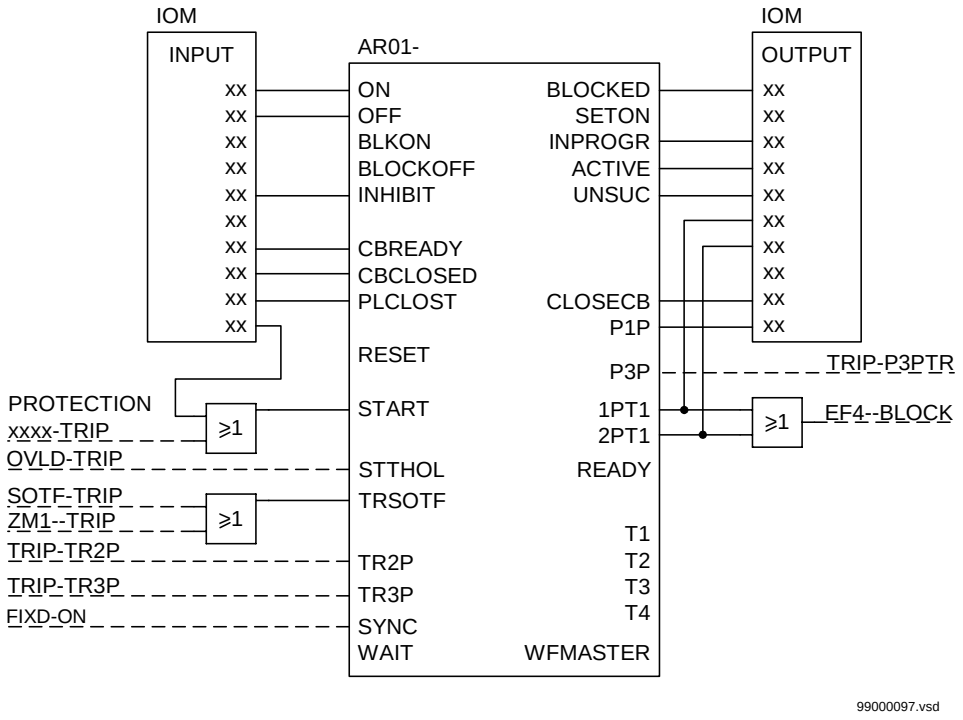

Figure 35: Recommendations for I/O-signal connections

2.3.4 Settings

Number of reclosing attempts: 1 to 4 attempts can be chosen. In most cases 1 attempt is sufficient as the majority of arcing faults will cease after the first reclosing shot. In power systems with many faults caused by other phenomena than lightning, for example wind, it can be motivated with more than one reclosing attempt.

There are six different possibilities in the selection of reclosing programs. What type of first shot reclosing shall be made, and for which types of faults? In completely meshed power systems it is often acceptable to use three pole auto-reclosing for all fault types, as first shot. In power systems with few parallel paths single pole auto-reclosing should be considered, in order to avoid reclosing in a phase opposition situation. In such systems auto-reclosing should be allowed for single phase faults only. It must be remembered that there will be zero sequence current flow in the power system during the single pole reclosing open time.

If a permissive channel is used between the line ends, and the availability of the communication channel is considered to be low, extended dead time in case of loss of the channel should be used.

Due to the secondary arc at single pole trip and auto-reclosing, the extinguishing time for the arc will be longer than for three pole trip and auto-reclosing. Typical required dead time for single pole trip and reclosing is 800 ms. Typical required dead time for trip and reclosing is 400 ms. Different local phenomena, such as moisture, salt, pollution, etc. can influence the required dead time. The open time for the first auto-reclosing shot can be set for single pole (t1 1Ph), two pole (t1 2PH) and (t1).

The open time for the delayed auto-reclosing shots can be set individually (t2, t3 and t4). This setting can in some cases be restricted by national regulations.

In case of reclosing based on synchrocheck a maximum wait time (tSync) can be set. If the synchrocheck does not allow reclosing within this set time there will be no autoreclosing. This setting must be matched against the setting of the synchrocheck function. The operate time of the synchrocheck is mainly dependent on the setting angle difference. A typical operation time is about 200 ms. If the system will start to oscillate during the dead time, there can be some time before the synchronizing quantities can be accepted for reclosing. This can be checked by means of dynamic simulations. As a base recommendation tSync can be set to 2.0 s.

The breaker closing pulse length (tPulse) can be chosen with some margin longer that the shortest allowed pulse for the breaker (see breaker data).

The tReclaim setting must be chosen so that all autoreclosing shots can be completed.

The setting tTrip is used for blocking of autoreclosing in case of long trip duration. This can be the consequence of an unwanted permanent trip signal or a breaker failure.

In case of one breaker only priority none is chosen.

Chapter 7 Logic

About this chapter

This chapter describes the logic functions.

1 Tripping logic (TR)

1.1 Application

All trip signals from the different protection functions shall be routed through the trip logic. In its most simple alternative the logic will only link the trip signal and assure a sufficient duration of the trip signal.

The tripping logic in REx 5xx protection, control and monitoring terminals offers three different operating modes:

- Three-phase tripping for all kinds of faults (3ph operating mode)
- Single-phase tripping for single-phase faults and three-phase tripping for multi-phase and evolving faults (1ph/3ph operating mode). The logic also issues a three-phase tripping command when phase selection within the operating protection functions is not possible, or when external conditions request three-phase tripping.
- Single-phase tripping for single-phase faults, two-phase tripping for ph-ph and ph-ph-E faults and three-phase tripping for three-phase faults (1ph/2ph/3ph operating mode). The logic also issues a three-phase tripping command when phase selection within the operating protection functions is not possible or at evolving multi-phase faults.

The three phase trip for all faults gives a simple solution and is often sufficient in well meshed transmission systems and in sub-transmission systems.

As most faults, especially on the highest voltage levels, are single phase to earth faults, single phase tripping can be of great value. If the faulted phase is tripped only, power can be transferred on the line also during the dead time before reclosing. The single phase tripping at single phase faults must be combined with single pole reclosing.

Two phase tripping can be valuable on lines running parallel to each other.

To meet the different single, double, 1 and 1/2 or other multiple circuit breaker arrangements, one or more identical TR function blocks may be provided within a single terminal. The actual number of these TR function blocks that may be included within any given terminal depends on the type of terminal. Therefore, the specific circuit breaker arrangements that can be catered for, or the number of bays of a specific arrangement that can be catered for, depends on the type of terminal.

One TR function block should be used for each breaker, if the line is connected to the substation via more than one breaker. Assume that single pole tripping and auto-reclosing is used for the line. The breaker chosen as master must in that case have single pole tripping, while the slave breaker could have three pole tripping and auto-reclosing. In case of a permanent fault only one of the breakers has to be operated at the second energising of the fault. In case of a transient fault the slave breaker reclosing is made as a three pole reclosing onto the non-faulted line.

The same philosophy can be used for two-pole tripping and auto-reclosing.

1.2 Functionality

The minimum duration of a trip output signal from the TR function is 150ms. This is to secure the fault clearance.

The three-pole TR function has a single input through which all trip output signals from the protection functions within the terminal, or from external protection functions via one or more of the terminal's binary inputs, are routed. It has a single trip output for connection to one or more of the terminal's binary outputs, as well as to other functions within the terminal requiring this signal.

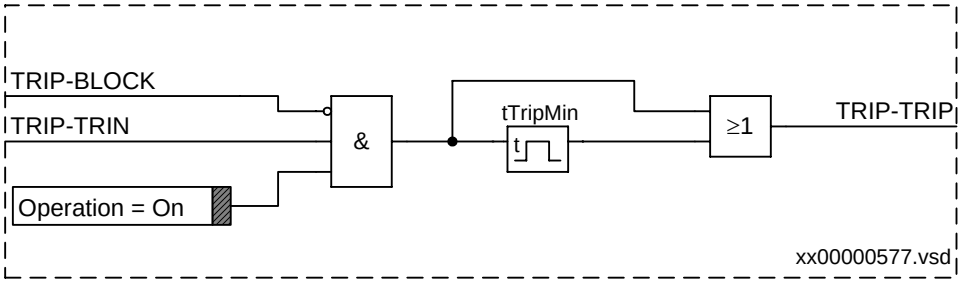

Figure 36: Simplified logic diagram for trip logic

The expanded TR function for single- and two-pole tripping has additional phase segregated inputs for this, as well as inputs for faulted phase selection. The latter inputs enable single- and two-pole tripping for those functions which do not have their own phase selection capability, and therefore which have just a single trip output and not phase segregated trip outputs for routing through the phase segregated trip inputs of the expanded TR function. Examples of such protection functions are the residual overcurrent protections. The expanded TR function has two inputs for these functions, one for impedance tripping (e.g. carrier-aided tripping commands from the scheme communication logic), and one for earth fault tripping (e.g. tripping output from a residual overcurrent protection). Additional logic secures a three-pole final trip command for these protection functions in the absence of the required phase selection signals.

The expanded TR function has three trip outputs, one per phase, for connection to one or more of the terminal's binary outputs, as well as to other functions within the terminal requiring these signals. There are also separate output signals indicating single pole, two pole or three pole trip. These signals are important for the cooperation with the auto-reclosing function.

The expanded TR function is equipped with logic which secures correct operation for evolving faults as well as for reclosing on to persistent faults. A special input is also provided which disables single- and two-pole tripping, forcing all tripping to be three-pole.

In case of multi-breaker arrangement, one TR function block can be used for each breaker, if the breaker functions differ. This can be the case if single pole trip and auto-reclosing is used.

1.3 Design

The function consists of the following basic logic parts:

- A three-phase front logic that is activated when the terminal is set into exclusive three-phase operating mode.
- A phase segregated front logic that is activated when the terminal is in 1ph/3ph or 1ph/2ph/3ph operating mode.
- An additional logic for evolving faults and three-phase tripping when the function operates in 1ph/3ph operating mode.
- An additional logic for evolving faults and three-phase tripping when the function operates in 1ph/2ph/3ph operating mode.
- The final tripping circuits.

1.3.1 Three-phase front logic

Figure 37 shows a simplified block diagram of a three-phase front logic. Descriptions of different signals are available in signal list.

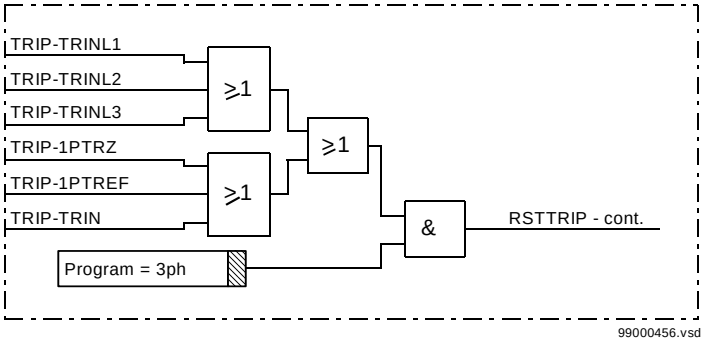

Figure 37: Three-phase front logic - simplified logic diagram

Any of active functional input signals activates the RSTTRIP internal signal, which influences the operation of the final tripping circuits.

1.3.2 Phase segregated front logic

The following input signals to the single-phase front logic influence the single-phase tripping of the terminal see figure 38:

- Phase related tripping signals from different built-in protection functions that can operate on a phase segregated basis and are used in the terminal. The output signals of these functions should be configured to the TRIP-TRINLn (n = 1...3) functional inputs.
- Internal phase-selective tripping signals from different phase selection functions within the terminal, like PHS (phase selection for distance protection) or GFC (general fault criteria). The output signals of these functions should be configured to the TRIP-PSLn (n = 1...3) functional inputs. It is also possible to connect to these functional inputs different external phase selection signals.
- Single-phase tripping commands from line distance protection or carrier aided tripping commands from scheme communication logic for distance protection, which initiate single-phase tripping. These signals should be configured to the

TRIP-1PTRZ functional input. It is also possible to configure a tripping output from an earth-fault overcurrent protection, to initiate the single-pole trip in connection with some external phase selection function. This signal should be configured to the TRIP-1PTREF functional input.

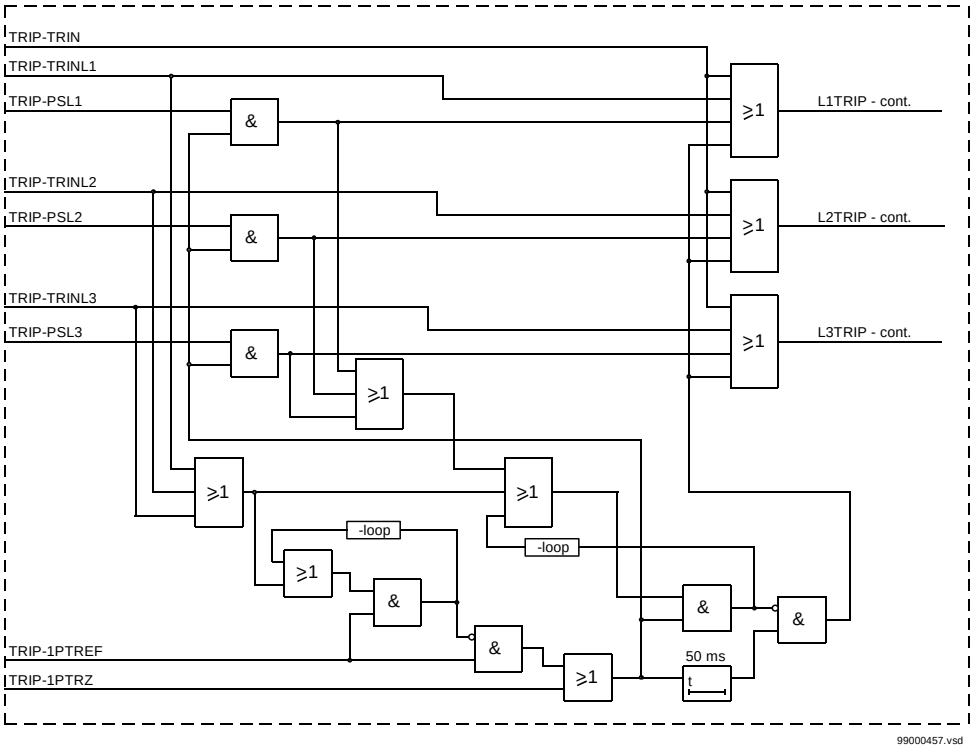

Figure 38: Phase segregated front logic

The TRIP-1PTRZ signal enables tripping corresponding to phase selection signals without any restriction while any phase selective external tripping signals prevent such tripping from the TRIP-1PTREF signal.

If any of these signals continues for more than 50 ms without the presence of any phase selection signals, three-phase tripping command is issued.

It is possible to configure the TRIP-1PTREF signal to the output signal of the EF---TRIP overcurrent, earth-fault, protection function (directional and nondirectional). This enables single-phase tripping when the faulty phase is detected by some other phase-selection element such as the phase selection in distance protection.

1.3.3 Additional logic for 1ph/3ph operating mode

Figure 39 presents the additional logic when the trip function is in 1ph/3ph operating mode. A TRIP-P3PTR functional input signal activates a three pole tripping if at least one phase within the front logic initiates a trip command.

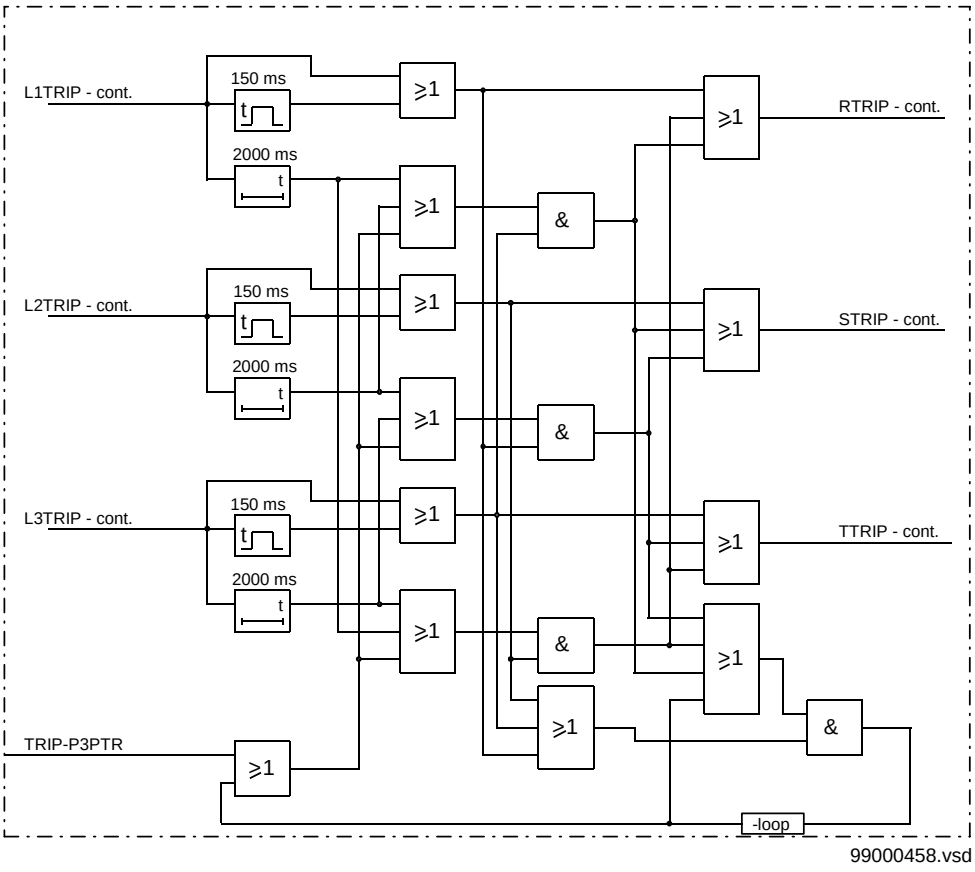

Figure 39: Additional logic for the 1ph/3ph operating mode

If only one of internal signals LnTRIP is present without the presence of a TRIP-P3PTR signal, a single pole tripping information is send to the final tripping circuits. A three-phase tripping command is initiated in all other cases.

Built-in drop-off delayed (two second) timers secure a three-phase tripping for evolving faults if the second fault occurs in different phase than the first one within a two second interval after initiation of a first tripping command.

1.3.4 Additional logic for 1ph/2ph/3ph operating mode

Figur 40 presents the additional logic, when the trip function is in 1ph/2ph/3ph operating mode. A TRIP-P3PTR functional input signal activates a three pole tripping if at least one phase within the front logic initiates a trip command.

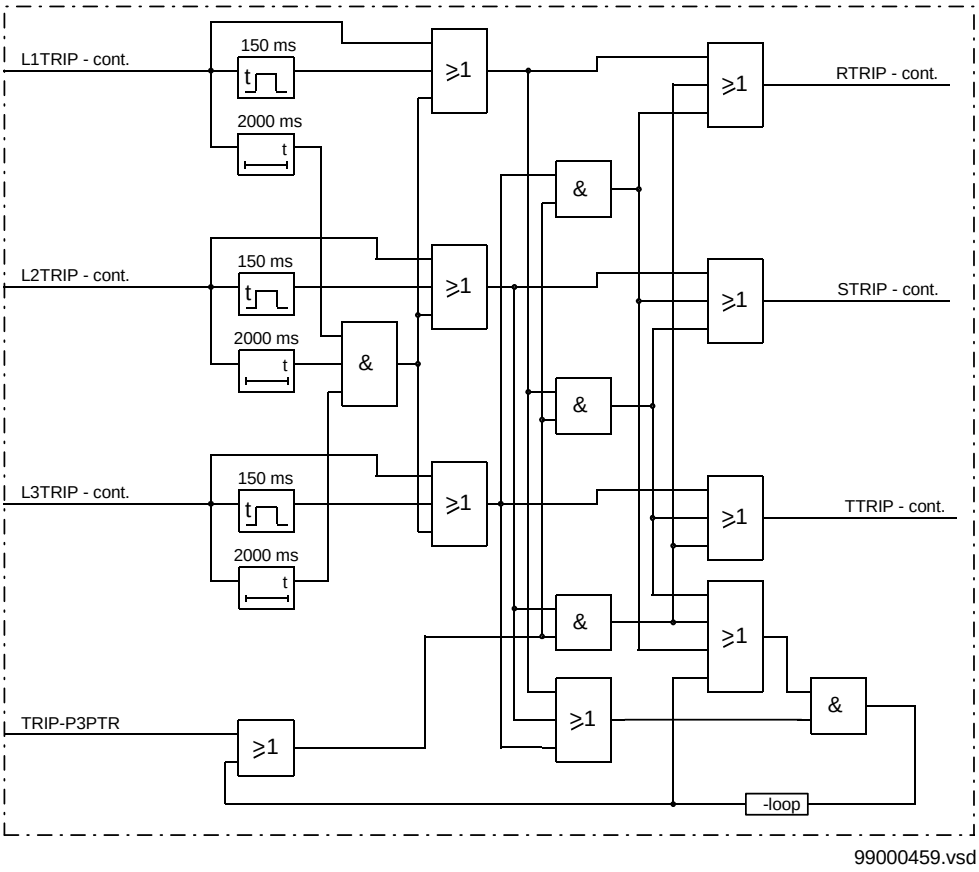

Figure 40: Additional logic for the 1ph/2ph/3ph operating mode

The logic initiates a single-phase tripping information to the final logic circuits, if only one of internal input signals (LnTRIP) is active. A two phase tripping information is send in case, when two out of three input signals LnTRIP are active. A three phase tripping information requires all three LnTRIP input signals to be active.

The built in drop-off delayed (two seconds) timers secure correct three-phase tripping information, when the faults are detected within two seconds in all three phases.

1.3.5 Final tripping circuits

Figur 41 present the final tripping circuits for a tripping function within the REx 5xx terminals. The TRIP-BLOCK functional input signal can block the operation of a function, so that no functional output signals become logical one. Detailed explanation of functional output signals is available in signal list.

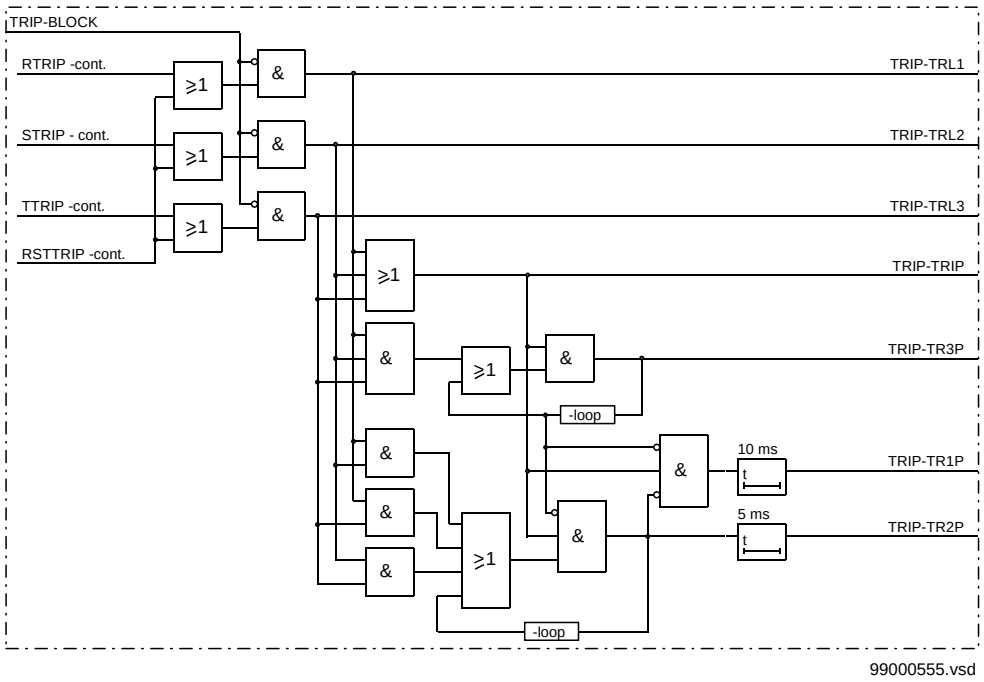

Figure 41: Final tripping circuits

1.4 Calculations

The parameters for the trip logic function are set via the local HMI or PST (Parameters Setting Tool). Refer to the Technical reference manual for setting parameters and path in local HMI.

2 Event function (EV)

2.1 Application

When using a Substation Automation system, events can be spontaneously sent or polled from the terminal to the station level. These events are created from any available signal in the terminal that is connected to the event function block. The event function block can also handle double indication, that is normally used to indicate positions of high-voltage apparatuses. With this event function block, data also can be sent to other terminals over the interbay bus.

2.2 Functionality

The events can be created from both internal logical signals and binary input channels. The internal signals are time tagged in the main processing module, while the binary input channels are time tagged directly on each I/O module. The events are produced according to the set event masks. The event masks are treated commonly for both the LON and SPA channels. All events according to the event mask are stored in a buffer, which contains up to 1000 events. If new events appear before the oldest event in the buffer is read, the oldest event is overwritten and an overflow alarm appears.

The outputs from the event function block are formed by the reading of status and events by the station HMI on either every single input or double input. The user-defined name for each input is intended to be used by the station HMI.

Twelve of the event function blocks are executed with fast cyclicity. That means that the time-tagging resolution on the events that are emerging from internal logical signals, created from configurable logic, is the same as the cyclicity of this logic. The time tagging resolution on the events that are emerging from binary input signals have a resolution of 1 ms.

Two special signals for event registration purposes are available in the terminal, *Terminal restarted and Event buffer overflow*.

2.3 Design

2.3.1 General

As basic, 12 event function blocks EV01-EV12 running with a fast cyclicity, are available in REx 5xx. When the function Apparatus control is included in the terminal, additional 32 event function blocks EV13-EV44, running with a slower cyclicity, are available.

Each event function block has 16 connectables corresponding to 16 inputs INPUT1 to INPUT16. Every input can be given a name with up to 19 characters from the CAP configuration tool.

The inputs can be used as individual events or can be defined as double indication events.

The inputs can be set individually from the Parameter Setting Tool (PST) under the Mask-Event function as:

- No events
- OnSet, at pick-up of the signal

- OnReset, at drop-out of the signal
- OnChange, at both pick-up and drop-out of the signal

Also an input PrColxx (xx=01-44) is available on the function block to define on which protocol the events shall be sent.

The event function blocks EV01-EV06 have inputs for information numbers and function type, which are used to define the events according to the communication standard IEC 60870-5-103.

2.3.2 Double indication

Double indications are used to handle a combination of two inputs at a time, for example, one input for the open and one for the close position of a circuit breaker or disconnector. The double indication consists of an odd and an even input number. When the odd input is defined as a double indication, the next even input is considered to be the other input. The odd inputs has a suppression timer to suppress events at 00 states.

To be used as double indications the odd inputs are individually set from the SMS under the Mask-Event function as:

- Double indication
- Double indication with midposition suppression

Here, the settings of the corresponding even inputs have no meaning.

These states of the inputs generate events. The status is read by the station HMI on the status indication for the odd input:

- 00 generates an intermediate event with the read status 0
- 01 generates a close event with the read status 1
- 10 generates an open event with the read status 2
- 11 generates an undefined event with the read status 3

2.3.3 Communication between terminals

The BOUND and INTERVAL inputs are available on the event function block.

The BOUND input set to 1 means that the output value of the event block is bound to another control terminal on the LON bus. The event function block is then used to send data over the LON bus to other REx 5xx terminals. The most common use is to transfer interlocking information between different bays. That can be performed by an event function block used as a send block and with a Multiple Command function block used as a receive block. The document, see section describes how to transfer the interlocking information. The configuration of the communication between control terminals is made by the LON Network Tool.

The INTERVAL input is applicable only when the BOUND input is set to 1. The INTERVAL is intended to be used for cyclic sending of data to other control terminals via the LON bus with the interval time as set. This cyclic sending of data is used as a backup of the event-driven sending, which always is performed. With cyclic sending of data, the communication can be supervised by a corresponding INTERVAL input on the Multiple Command function block in another control terminal connected to the LON bus. This INTERVAL input time is set a little bit longer than the interval time set on the event function block. With INTERVAL=0, only event-driven sending is performed.

2.4 Calculations

The event reporting can be set from the PST as:

- Use event masks
- Report no events
- Report all events

Use of event masks is the normal reporting of events, that is, the events are reported as defined in the database.

An event mask can be set individually for each available signal in the terminal. The setting of the event mask can only be performed from the PST.

All event mask settings are treated commonly for all communication channels of the terminal.

Report no events means blocking of all events in the terminal.

Report all events means that all events, that are set to OnSet/OnReset/OnChange are reported as OnChange, that is, both at set and reset of the signal. For double indications when the suppression time is set, the event ignores the timer and is reported directly. Masked events are still masked.

Parameters to be set for the event function block are:

- T_SUPRyy including the suppression time for double indications.
- NAMEyy including the name for each input.
- PrColxx including the type of protocol for sending the events.
- INTERVAL used for the cyclic sending of data.
- BOUND telling that the block has connections to other terminals over the LON bus.
- FuncTEVx (for EV01-EV06) including the function type for sending events via IEC 60870-5-103.
- InfoNoyy (for EV01-EV06) including the information number for the events sending via IEC 60870-5-103.

These parameters are set from the CAP configuration tool. When the BOUND parameter is set, the settings of the event masks have no meaning.

Chapter 8 Monitoring

About this chapter

This chapter describes the monitoring functions.

1 Disturbance report

1.1 Application

Use the disturbance report to provide the network operator with proper information about disturbances in the primary network. Continuous collection of system data and, at occurrence of a fault, storing of a certain amount of pre-fault, fault and post-fault data, contributes to the highest possible quality of electrical supply. The stored data can be used for analysis and decision making to find and eliminate possible system and equipment weaknesses.

The function comprises several sub functions enabling different users to access relevant information in a structured way.

1.1.1 Requirement of trig condition for disturbance report

Disturbance reports, setting and internal events in REx 5xx are stored in a non volatile flash memory. Flash memories are used in many embedded solutions for storing information due to high reliability, high storage capacity, short storage time and small size.

In REx 5xx there is a potential failure problem, caused by too many write operations to the flash memory.

Our experience shows that after storing more than fifty thousand disturbances, settings or internal events the flash memory exceeds its storing capacity and the component is finally defected.

When the failure occurs there is no risk of unwanted operation of the protection terminal due to the self-supervision function that detects the failure. The terminal will give a signal for internal fail and go into blocking mode.

The above limitation on the storage capacity of the flash memory gives the following recommendation for the disturbance report trig condition:

- Cyclic trig condition more often then once/day not recommended.
- Minute pulse input is not used as a trig condition.
- Total number of stored disturbance reports shall not exceed fifty thousand.

1.2 Functionality

The disturbance report is a common name for several facilities to supply the operator with more information about the disturbances in the system. Some of the facilities are basic and some are optional in the different products. For some products not all facilities are available.

The facilities included in the disturbance report are:

- General disturbance information
- Indications
- Event recorder
- Fault locator
- Trip values (phase values)
- Disturbance recorder

The whole disturbance report can contain information for up to 10 disturbances, each with the data coming from all the parts mentioned above, depending on the options installed. All information in the disturbance report is stored in non-volatile flash memories. This implies that no information is lost in case of loss-of-power supply

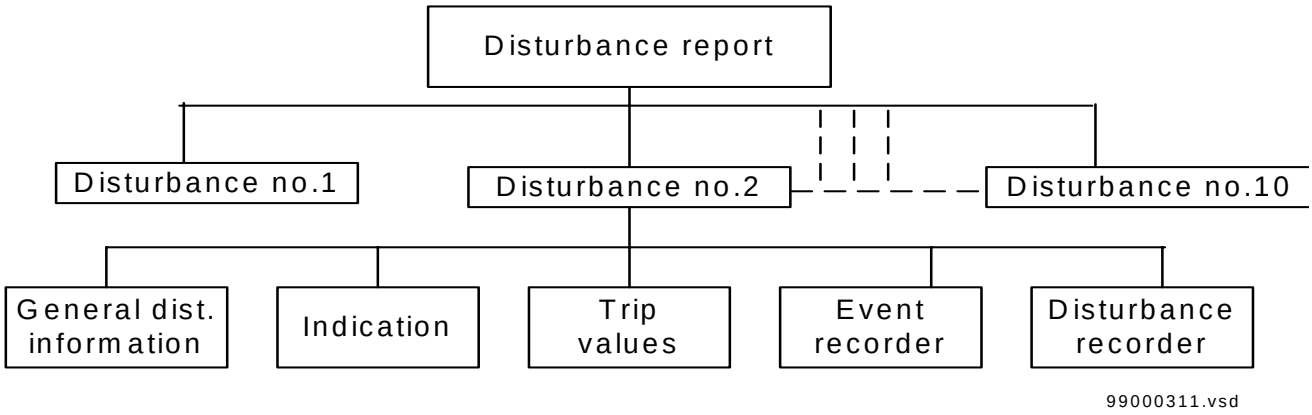

Figure 42: Disturbance report structure

Up to 10 disturbances can always be stored. If a new disturbance is to be recorded when the memory is full, the oldest disturbance is over-written by the new one. The nominal memory capacity for the disturbance recorder is measured with 10 analog and 48 binary signals recorded, which means that in the case of long recording times, fewer than 10 disturbances are stored. If fewer analog signals are recorded, a longer total recording time is available. This memory limit does not affect the rest of the disturbance report.

1.2.1 Disturbance information

The indications, the fault locator result (when applicable), and the trip values are available on the local HMI. For a complete disturbance report, front communication with a PC or remote communication with SMS is required.

Disturbance overview is a summary of all the stored disturbances. The overview is available only on a front-connected PC or via the Station Monitoring System (SMS). The overview contains:

- Disturbance index
- Date and time
- Trip signals
- Trigger signal that activated the recording
- Distance to fault (requires Fault locator)
- Fault loop selected by the Fault locator (requires Fault locator)

Disturbance Summary is automatically scrolled on the local human-machine interface (HMI). Here the two latest disturbances (DisturbSummary 1, which is the latest and DisturbSummary 2 which is the second latest) are presented with:

- Date and time
- Selected indications (set with the Indication mask)
- Distance to fault and fault loop selected by the Fault locator

The date and time of the disturbance, the trigger signal, the indications, the fault locator result and the trip values are available, provided that the corresponding functions are installed.

1.2.2 Indications

Indications is a list of signals that were activated during the fault time of the disturbance. A part (or all) of these signals are automatically scrolled on the local HMI after a disturbance.

1.2.3 Event recorder

The event recorder contains an event list with time-tagged events. In the Station Monitoring System, this list is directly connected to a disturbance.

1.2.4 Fault locator

The fault locator contains information about the distance to the fault and about the measuring loop that was selected for the calculation. After changing the system parameters in the terminal, a recalculation of the distance to the fault can be made in the protection

1.2.5 Trip values

Trip values includes phasors of currents and voltages before the fault and during the fault

1.2.6 Disturbance recorder

The disturbance recorder records analog and binary signal data before, during and after the fault.

1.2.7 Recording times

The disturbance report records information about a disturbance during a settable timeframe. The recording times are valid for the whole disturbance report. The disturbance recorder and the event recorder register disturbance data and events during *tRecording*, the total recording time. Indications are only registered during the fault time.

The total recording time, *tRecording*, of a recorded disturbance is:

tRecording =	tPre + tFault + tPost or tPre + tLim, depending on which criterion stops the current disturbance recording

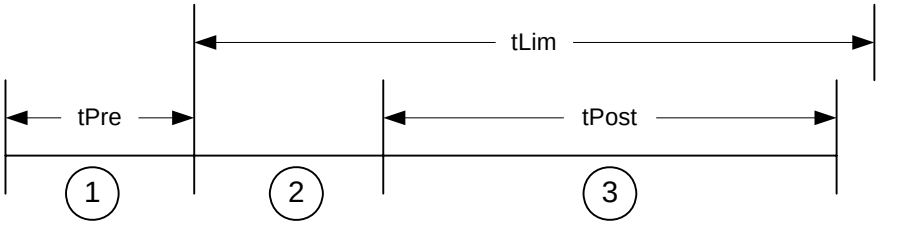

xx00000316.vsd

Table 8: Definitions

1	Pre-fault or pre-trigger recording time. The time before the fault including the operate time of the trigger. Use the setting tPre to set this time.
2	Fault time of the recording. The fault time cannot be set. It continues as long as any valid trigger condition, binary or analog, persists (unless limited by tLim the limit time).
3	Post fault recording time. The time the disturbance recording continues after all activated triggers are reset. Use the setting tPost to set this time.
tLim	Limit time. The maximum allowed recording time after the disturbance recording was triggered. The limit time is used to eliminate the consequences of a trigger that does not reset within a reasonable time interval. It limits the maximum recording time of a recording and prevents subsequent overwriting of already stored disturbances.Use the setting tLim to set this time.

Figure 43: The recording times definition

1.2.8 Analog signals

Up to 10 analog signals (five voltages and five currents from the transformer module) can be selected for recording and triggering if the disturbance recorder function is installed. If fewer than 10 signals are selected, the maximum storing capacity in the flash memories, regarding total recording time are increased.

A user-defined name for each of the signals can be programmed in the terminal.

For each of the 10 analog signals, *Operation = On* means that it is recorded by the disturbance recorder. The trigger is independent of the setting of *Operation*, and triggers even if operation is set to *Off*. Both undervoltage and overvoltage can be used as trigger condition. The same applies for the current signals.

The check of the trigger condition is based on peak-to-peak values. When this is found, the absolute average value of these two peak values is calculated. If the average value is above the threshold level for an overvoltage or overcurrent trigger, this trigger is indicated with a greater than (>) sign with the user-defined name.

If the average value is below the set threshold level for an undervoltage or undercurrent trigger, this trigger is indicated with a less than (<) sign with its name. The procedure is separately performed for each channel.

This method of checking the analog start conditions gives a function which is insensitive to DC offset in the signal. The operate time for this start is typically in the range of one cycle, 20 ms for a 50 Hz network.

The analog signals are presented only in the disturbance recording, but they affect the entire disturbance report when being used as triggers.

1.2.9 Binary signals

Up to 48 binary signals can be selected from the signal list, where all available signals are grouped under each function. The 48 signals can be selected from internal logical signals and binary input signals. Each of the 48 signals can be selected as a trigger of the disturbance report. It is also possible to set if the trigger should be activated on a logic 1 or a logic 0. A binary signal can be selected to activate the red LED on the local HMI.

A user-defined name for each of the signals can be programmed in the terminal.

The selected 48 signals are presented in the event list and the disturbance recording. But they affect the whole disturbance report when they are used as triggers.

The indications, that are to be automatically scrolled on the HMI when a disturbance has been recorded are also selected from these 48 signals with the HMI Indication Mask.

1.2.10 Trigger signals

The trigger conditions affect the entire disturbance report. As soon as a trigger condition is fulfilled, a complete disturbance report is recorded. On the other hand, if no trigger condition is fulfilled, there is no disturbance report, no calculation of distance to fault, no indications, and so on. This implies the importance of choosing the right signals as trigger conditions.

A trigger can be of type:

- Manual trigger
- Binary-signal trigger
- Analog-signal trigger (over/under function)

Manual trigger

A disturbance report can be manually triggered from the local HMI, a front-connected PC, or SMS. When the trigger is activated, the manual trigger signal is generated. This feature is especially useful for testing. Refer to Operators manual for procedure.

Binary trigger

Any binary signal state (logic one or a logic zero) can be selected to generate a trigger. The binary signal must remain in a steady state for at least 15 ms to be valid.

When a binary signal is selected to generate a trigger from a logic zero, the selected signal will not be listed in the indications list of the disturbance report.

Analog trigger

All analog signals are available for trigger purposes, no matter if they are recorded in the disturbance recorder or not. But the disturbance recorder function must be installed in the terminal.

Retrigger

Under certain circumstances the fault condition may reoccur during the postfault recording, for instance by automatic reclosing to a still faulty network. In order to capture the new fault it is possible to allow retriggering during the PostFault recording.

1.3 Calculations

The parameters for the disturbance report function are set via the local HMI or PST (Parameter Setting Tool). Refer to the Technical reference manual for setting parameters and path in local HMI.

The settings include:

Operation	Disturbance Report (On/Off)
ReTrig	Re-trigger during post-fault state (On/Off)
SequenceNo	Sequence number (0-255) (normally not necessary to set)
RecordingTimes	Recording times for the Disturbance Report and the event/indication logging, including pre-fault time, post-fault time, and limit time for the entire disturbance
BinarySignals	Selection of binary signals, trigger conditions, HMI indication mask and HMI red LED option
AnalogSignals	Recording mask and trigger conditions
FaultLocator	Distance measurement unit (km/miles/%)
	km or miles selected under line reference

User-defined names of analog input signals can be set.

The user-defined names of binary signals can be set with the CAP configuration tool.

The analog and binary signals appear with their user-defined names.

1.3.1 Settings during normal conditions

Table 9: How the settings affect different functions in the disturbance report

HMI Setting menu	Function	Disturbance summary (on HMI)	Disturbance recorder	Indications	Event list (SMS)	Trip values	Fault locator
Operation	Operation (On/Off)	Yes	Yes	Yes	Yes	Yes	Yes
Recording times	Recording times (tPre, tPost, tLim)	No	Yes	No	Yes	No	No

HMI Setting menu	Function	Disturbance summary (on HMI)	Disturbance recorder	Indications	Event list (SMS)	Trip values	Fault locator
Binary signals	Trigger operation and trigger level	Yes	Yes	Yes	Yes	Yes	Yes
	Indication mask (for automatic scrolling)	Yes	No	No	No	No	No
Analog signals	Operation (On/Off)	No	Yes	No	No	Yes	Yes
	Trigger over/under function	Yes	Yes	Yes	Yes	Yes	Yes
Fault Locator	Fault locator settings (Distance Unit)	No	No	No	No	No	Yes

1.3.2 Operation

Operation can be set to On or Off. If Off is selected, note that no disturbance report is registered, including indications, fault locator, event recorder, and disturbance recorder.

Operation = Off:

- Disturbances are not stored.
- LED information (yellow - start, red - trip) is not stored or changed.
- No disturbance summary is scrolled on the local HMI.

Operation = On:

- Disturbances are stored, disturbance data can be read from the local HMI and from a front-connected PC or Station Monitoring System (SMS).
- LED information (yellow - start, red - trip) is stored.
- The disturbance summary is automatically scrolled on the local HMI for the two latest registered disturbances, until cleared.

Post re-trigger can be set to On or Off

Postretrig = On:

Re-trigger during the set post-fault time is enabled.

Postretrig = Off:

Re-trigger during the set post fault time is not accepted.

1.3.3 Sequence number

Normally, this setting option is seldom used. Each disturbance is assigned a number in the disturbance report. The first disturbance each day normally receives *SequenceNo = 0*. The value of *SequenceNo* that can be read in the service report is the number that will be assigned to the next disturbance registered during that day.

In normal use, the sequence number is increased by one for each new disturbance until it is reset to zero each midnight.

1.3.4 Recording times

The different recording times for the disturbance report are set (the pre-fault time, post-fault time, and limit time). These recording times affect the disturbance recorder and event recorder functions. The total recording time, tRecording, of a recorded disturbance is:

tRecording = tPre + tFault + tPost, or tPre + tLim, depending on which criterion stops the current disturbance recording.

1.3.5 Binary signals

Up to 48 binary signals can be selected from the signal list, where all available signals are grouped function by function. The 48 signals can be selected among internal logical signals and binary input signals. Each selected signal is registered by the disturbance recorder, event recorder, and indication functions during a recording. The CAP configuration tool is used to configure the signals.

A user-defined name for each of the signals can be entered. This name can comprise up to 13 characters and is set with the CAP configuration tool.

For each of the 48 signals, it is also possible to select if the signal is to be used as a trigger for the start of the disturbance report (*TrigOperation*), and if the trigger should be activated at a logical 1 or 0 level (*TrigLevel*).

The indications in the disturbance summary, that are automatically scrolled on the HMI when a disturbance is registered, are also selected from these 48 signals using the indication mask.

1.3.6 Analog signals

For each of the 10 analog signals (five voltages and five currents), Operation = On means that it is recorded by the disturbance recorder. If fewer than 10 signals are selected, the maximum storing capacity in the flash memories for total recording time becomes longer.

Both undervoltage and overvoltage can be used as trigger condition. The same applies for the current signals. The trigger is independent of the setting of *Operation* and triggers even if *Operation = Off*.

A user-defined name for each of the analog input signals can be entered. It can consist of up to 13 characters and is a general setting valid for all relevant functions within the terminal.

1.3.7 Behavior during test mode

When the terminal is set to test mode, the behavior of the disturbance report can be controlled by the test mode disturbance report settings *Operation* and *DisturbSummary* available on the local HMI.

The impact of the settings are according to the following table:

Table 10: Disturbance report settings

Operation	DisturbSummary	Then the results are...
Off	Off	• Disturbances are not stored. • LED information is not displayed on the HMI and not stored. • No disturbance summary is scrolled on the HMI.
Off	On	• Disturbances are not stored. • LED information (yellow - start, red - trip) are displayed on the local HMI but not stored in the terminal. • Disturbance summary is scrolled automatically on the local HMI for the two latest recorded disturbances, until cleared. • The information is not stored in the terminal.
On	On or Off	• The disturbance report works as in normal mode. • Disturbances are stored. Data can be read from the local HMI, a front-connected PC, or SMS.- LED information (yellow - start, red - trip) is stored. • The disturbance summary is scrolled automatically on the local HMI for the two latest recorded disturbances, until cleared. • All disturbance data that is stored during test mode remains in the terminal when changing back to normal mode.

2 Indications

2.1 Application

The indications from all the 48 selected binary signals are shown on the local human-machine interface (HMI) and on the Station Monitoring System (SMS) for each recorded disturbance in the disturbance report. The LEDs on the front of the terminal display start and trip indications.

2.2 Functionality

The indications shown on the HMI and SMS give an overview of the status of the 48 event signals during the fault. The indications for each recorded disturbance are presented on the HMI.

All selected signals can be internally produced signals or emerge from binary input channels.

The indications are registered only during the fault time of a recorded disturbance, as long as any trigger condition is activated. A part or all of these indications can be automatically scrolled on the local HMI after a disturbance is recorded, until acknowledged with the C button on the HMI. They are selected with the indication mask.

The signal name for internal logical signals presented on the screen follows the signal name, which can be found in the signal list in each function description of the “Technical reference manual”. Binary input signals are displayed with their user-defined names.

The LED indications display this information:

Green LED:

- Steady light — In Service
- Flashing light — Internal fail, the INT--FAIL internal signal is high
- Dark — No power supply

Yellow LED:

- Steady light — A disturbance report is triggered
- Flashing light — The terminal is in test mode or in configuration mode

Red LED:

- Steady light — Trig on binary signal with HMI red LED option set
- Flashing light — The terminal is in configuration mode

2.3 Calculations

The parameters for the disturbance report function are set via the local HMI or PST (Parameter Setting Tool). Refer to the Technical reference manual for setting parameters and path in local HMI.

3 Supervision of AC input quantities (DA)

3.1 Application

Fast, reliable supervision of different analog quantities is of vital importance during the normal operation of a power system.

Operators in the control centres can, for example:

- Continuously follow active and reactive power flow in the network
- Supervise the busbar voltage and frequency

Different measuring methods are available for different quantities. Current and voltage instrument transformers provide the basic information on measured phase currents and voltages in different points within the power system. At the same time, currents and voltages serve as the input measuring quantities to power and energy meters, protective devices and so on.

Further processing of this information occurs within different control, protection, and monitoring terminals and within the higher hierarchical systems in the secondary power system.

3.2 Functionality

The REx 5xx protection, control, and monitoring terminals have as basic the functionality to measure and further process information about up to five input currents and five input voltages. The number of processed alternate measuring quantities depends on the type of terminal and built-in options. Additional information is also available:

- Mean values of measured currents I in the first three current measuring channels (I1, I2, I3).
- Mean values of measured voltages U in the first three voltage measuring channels (U1, U2, U3).
- Three-phase active power P as measured by the first three current measuring channels (I1, I2, I3) and the first three voltage measuring channels (U1, U2, U3).
- Three-phase reactive power Q as measured by the first three current measuring channels (I1, I2, I3) and the first three voltage measuring channels (U1, U2, U3).
- Three-phase apparent power S as measured by the first three current (I1, I2, I3) and the first three voltage measuring channels (U1, U2, U3).
- Frequency f.

The accuracy of measurement depends on the requirements. Basic accuracy satisfies the operating (information) needs. An additional calibration of measuring channels is necessary and must be ordered separately when the requirements on accuracy of the measurement are higher. Refer to the technical data and ordering particulars for the particular terminal.

The information on measured quantities is then available for the user at different locations:

- Locally by means of the local human-machine interface (HMI) unit.
- Locally by means of a front-connected personal computer (PC).
- Remotely over the LON bus to the station control system (SCS)

- Remotely over the SPA port to the station monitoring system (SMS).

3.2.1 User-defined measuring ranges

Each measuring channel has an independent measuring range from the others. This allows the users to select the most suitable measuring range for each measuring quantity on each monitored object of the power system. This gives a possibility to optimize the functionality of the power system.

3.2.2 Continuous monitoring of the measured quantity

Users can continuously monitor the measured quantity in each channel by means of four built-in operating thresholds, figure 44. The monitoring has two different modes of operating:

- Overfunction, when the measured current exceeds the HiWarn or HiAlarm pre-set values.
- Underfunction, when the measured current decreases under the LowWarn or LowAlarm pre-set values.

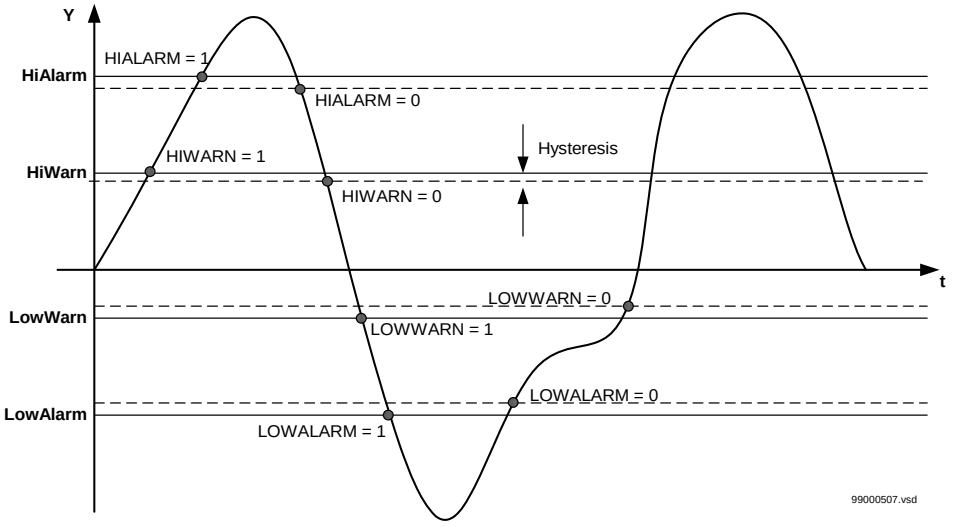

Figure 44: Presentation of the operating limits.

Each operating level has its corresponding functional output signal:

- HIWARN
- HIALARM
- LOWWARN
- LOWALARM

The logical value of the functional output signals changes according to figure 44.

The user can set the hysteresis, which determines the difference between the operating and reset value at each operating point, in wide range for each measuring channel separately. The hysteresis is common for all operating values within one channel.

3.2.3 Continuous supervision of the measured quantity

The actual value of the measured quantity is available locally and remotely. The measurement is continuous for each channel separately, but the reporting of the value to the higher levels depends on the selected reporting mode. The following basic reporting modes are available:

- Periodic reporting.
- Periodic reporting with dead-band supervision in parallel.
- Periodic reporting with dead-band supervision in series.
- Dead-band reporting.

Users can select between two types of dead-band supervision:

- Amplitude dead-band supervision (ADBS).
- Integrating dead-band supervision (IDBS).

Amplitude dead-band supervision

If a measuring value is changed, compared to the last reported value, and the change is larger than the ± ΔY predefined limits that are set by user, then the measuring channel reports the new value to a higher level, if this is detected by a new measuring sample. This limits the information flow to a minimum necessary. Figure 45 shows an example of periodic reporting with the amplitude dead-band supervision. The picture is simplified: the process is not continuous but the values are evaluated with a time interval of one second from each others.

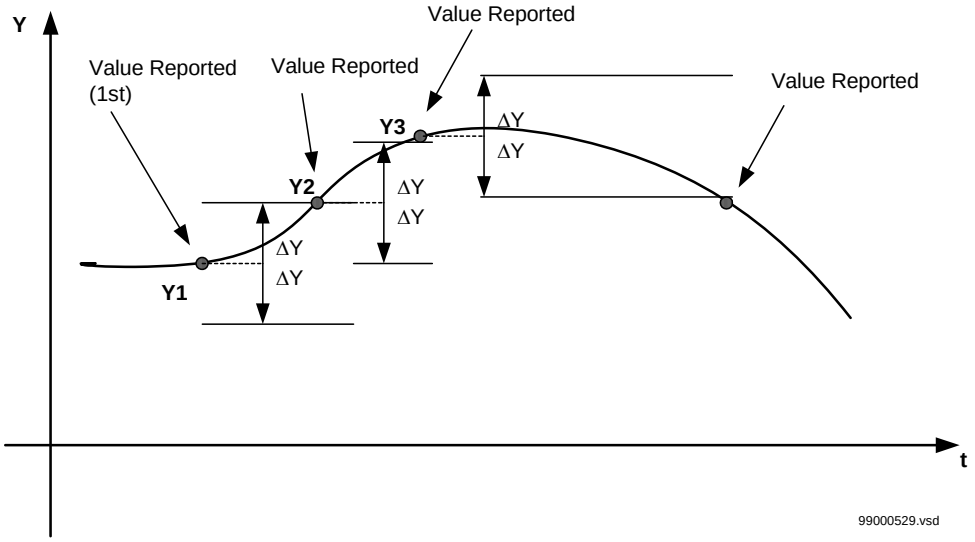

Figure 45: Amplitude dead-band supervision reporting

After the new value is reported, the ± ΔY limits for dead-band are automatically set around it. The new value is reported only if the measured quantity changes more than defined by the ± ΔY set limits.

Integrating dead-band supervision

The measured value is reported if the time integral of all changes exceeds the pre-set limit, figure 46, where an example of reporting with integrating dead-band supervision is shown. The picture is simplified: the process is not continuous but the values are evaluated with a time interval of one second from each other.

The last value reported, Y1 in figure 46 serves as a basic value for further measurement. A difference is calculated between the last reported and the newly measured value during new sample and is multiplied by the time increment (discrete integral). The absolute values of these products are added until the pre-set value is exceeded. This occurs with the value Y2 that is reported and set as a new base for the following measurements (as well as for the values Y3, Y4 and Y5).

The integrating dead-band supervision is particularly suitable for monitoring signals with small variations that can last for relatively long periods.

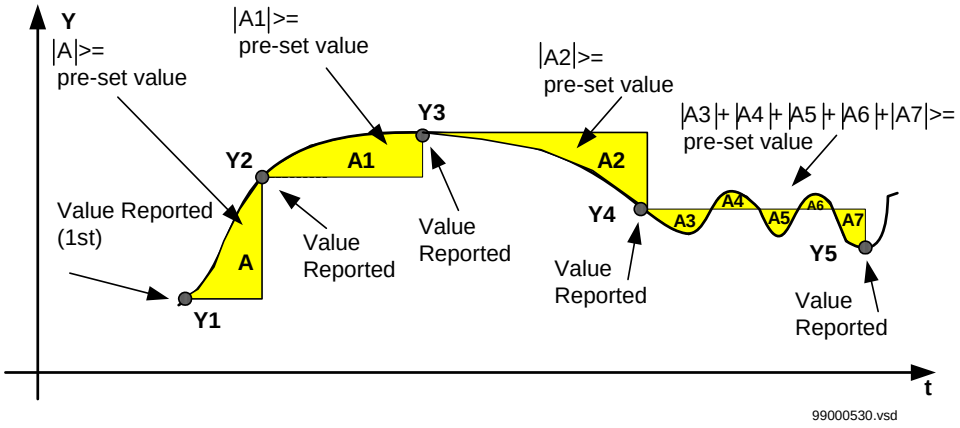

Figure 46: Reporting with integrating dead-band supervision.

Periodic reporting

The user can select the periodic reporting of measured value in time intervals between 1 and 3600 s. The measuring channel reports the value even if it has not changed for more than the set limits of amplitude or integrating dead-band supervision. To disable periodic reporting, set the reporting time interval to 0 s, figure 47.

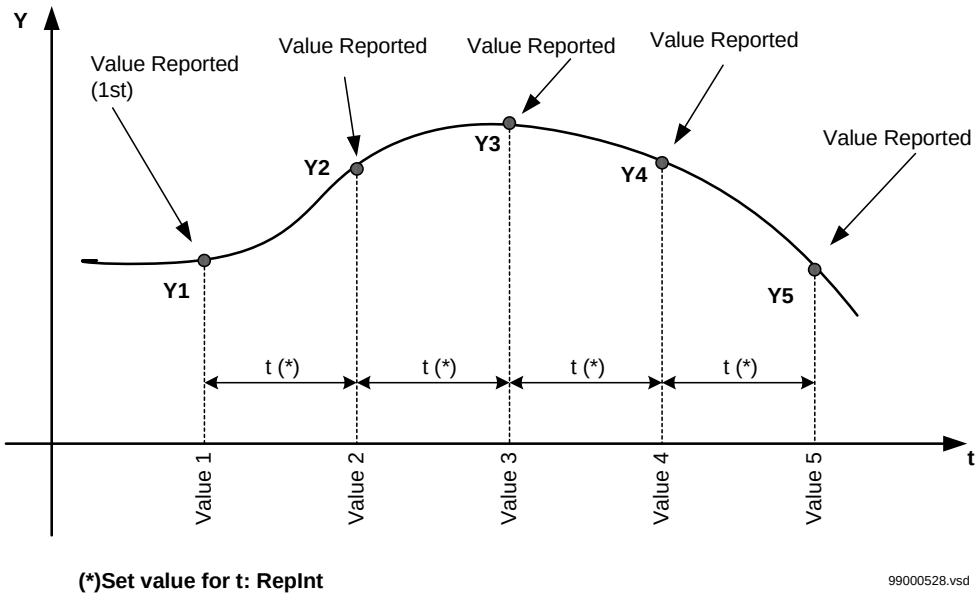

Figure 47: Periodic reporting.

Periodic reporting with parallel dead-band supervision

The newly measured value is reported:

- After each time interval for the periodic reporting expired or
- When the new value is detected by the dead-band supervision function.

The amplitude dead-band and the integrating dead-band can be selected. The periodic reporting can be set in time intervals between 1 and 3600 seconds.

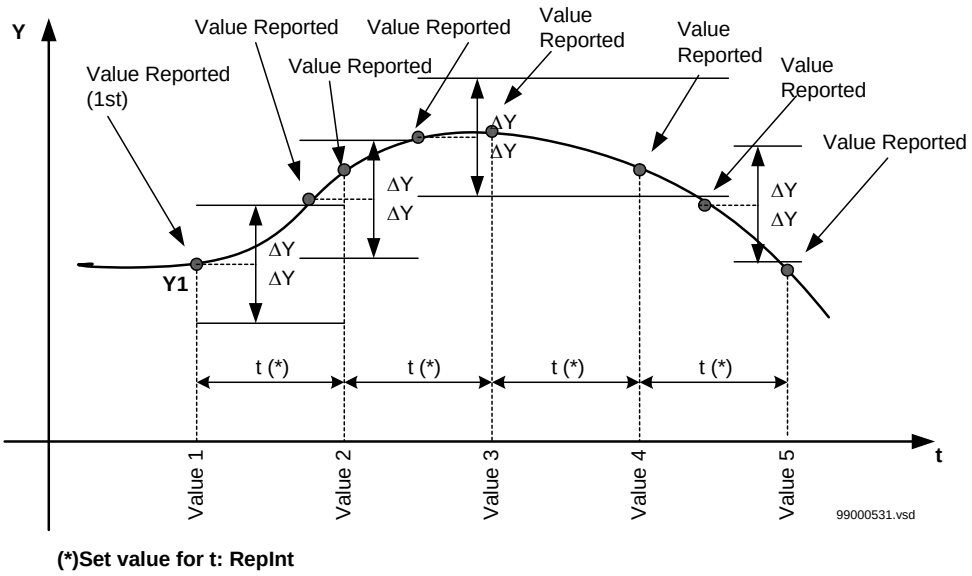

Figure 48: Periodic reporting with amplitude dead-band supervision in parallel.

Periodic reporting with serial dead-band supervision

Periodic reporting can operate serially with the dead-band supervision. This means that the new value is reported only if the set time period expired and if the dead-band limit was exceeded during the observed time, figure 49 and figure 50. The amplitude dead-band and the integrating dead-band can be selected. The periodic reporting can be set in time intervals between 1 and 3600 seconds.

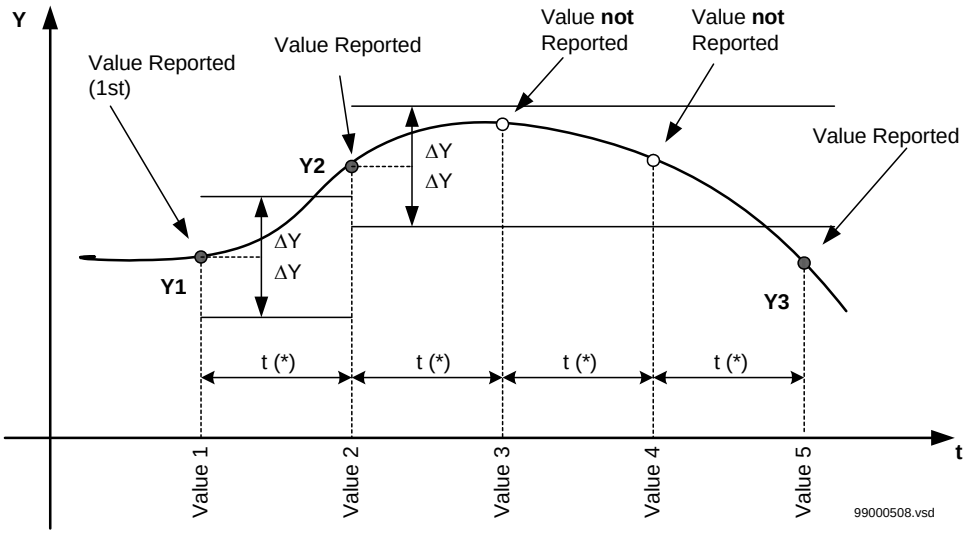

(*)Set value for t: RepInt

Figure 49: Periodic reporting with amplitude dead-band supervision in series.

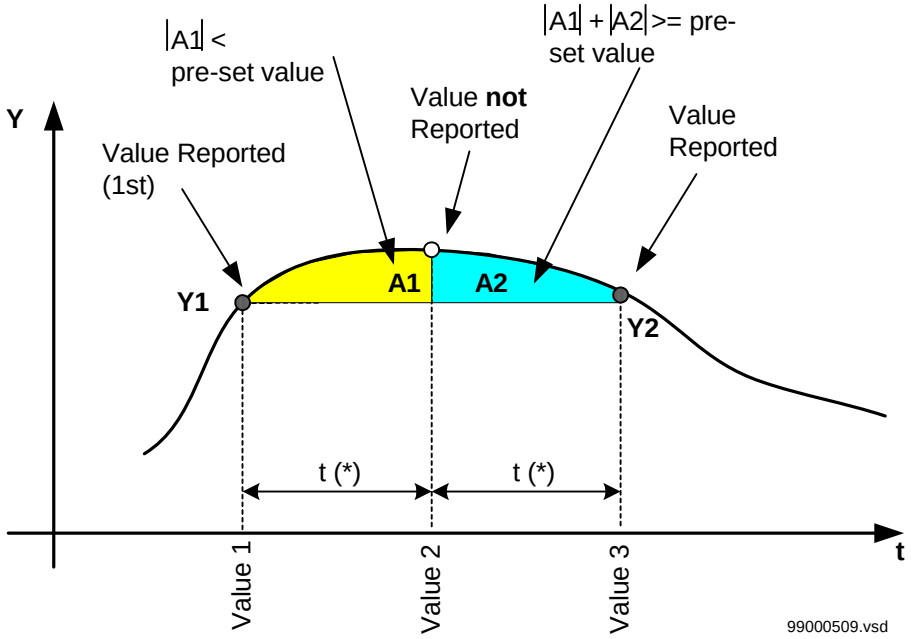

(*)Set value for t: RepInt

Figure 50: Periodic reporting with integrating dead-band supervision in series

Combination of periodic reportings

The reporting of the new value depends on setting parameters for the dead-band and for the periodic reporting. Table 11 presents the dependence between different settings and the type of reporting for the new value of a measured quantity.

Table 11: Dependence of reporting on different setting parameters:

EnDeadB*	EnIDeadB*	EnDeadBP*	RepInt*	Reporting of the new value
Off	Off	Off	0	No measured values is reported.
Off	On	On	t>0	The new measured value is reported only if the time t period expired and if, during this time, the integrating dead-band limits were exceeded (periodic reporting with integrating dead-band supervision in series).
On	Off	On	t>0	The new measured value is reported only if the time t period has expired and if, during this time, the amplitude dead-band limits were exceeded (periodic reporting with amplitude dead-band supervision in series).
On	On	On	t>0	The new measured value is reported only if the time t period expired and if at least one of the dead-band limits were exceeded (periodic reporting with dead-band supervision in series).
Off	On	Off	0	The new measured value is reported only when the integrated dead-band limits are exceeded.
On	Off	Off	0	The new measured value is reported only when the amplitude dead-band limits were exceeded.
On	On	Off	0	The new measured value is reported only if one of the dead-band limits was exceeded.
x	x	Off	t>0	The new measured value is updated at least after the time t period expired. If the dead-band supervision is additionally selected, the updating also occurs when the corresponding dead-band limit was exceeded (periodic reporting with parallel dead-band supervision).
* Please see the setting parameters in the Technical reference manual for further explanation				

3.3 Design

The design of the alternating quantities measuring function follows the design of all REx 5xx-series protection, control, and monitoring terminals that have distributed functionality, where the decision levels are placed as closely as possible to the process.

The measuring function uses the same input current and voltage signals as other protection and monitoring functions within the terminals. The number of input current and voltage transformers depends on the type of terminal and options included. The maximum possible configuration comprises five current and five voltage input channels.

Measured input currents and voltages are first filtered in analog filters and then converted to numerical information by an A/D converter, which operates with a sampling frequency of 2 kHz.

The numerical information on measured currents and voltages continues over a serial link to one of the built-in digital signal processors (DSP). An additional Fourier filter numerically filters the received information, and the DSP calculates the corresponding values for the following quantities:

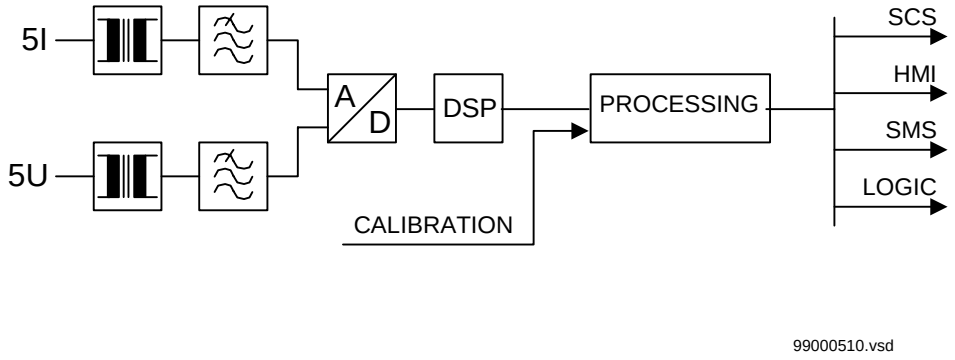

Figure 51: Simplified diagram for the function

This information is available to the user for operational purposes.

3.4 Calculations

The parameters for the monitoring of AC analog measurements function are set via the local HMI or PST (Parameter Setting Tool). Refer to the Technical reference manual for setting parameters and path in local HMI.

The user can determine the rated parameters for the terminal.

- Rated frequency fr
- Position of the earthing point of the main CTs (CTEarth), which determines whether the CT earthing point is towards the protected object or the busbar

The other basic terminal parameters, related to any single analog input, can be set under the configuration menu.

The user can determine the base values, the primary CTs and VTs ratios, and the user-defined names for the analog inputs of the terminal.

U1:

- ac voltage base value for analog input U1: U1b
- voltage transformer input U1 nominal primary to secondary scale value: U1Scale
- Name (of up to 13 characters) of the analog input U1: Name

U2:

- ac voltage base value for analog input U2: U2b

- voltage transformer input U2 nominal primary to secondary scale value: U2Scale
- Name (of up to 13 characters) of the analog input U2: Name

U3:

- ac voltage base value for analog input U3: U3b
- voltage transformer input U3 nominal primary to secondary scale value: U3Scale
- Name (of up to 13 characters) of the analog input U3: Name

U4:

- ac voltage base value for analog input U4: U4b
- voltage transformer input U4 nominal primary to secondary scale value: U4Scale
- Name (of up to 13 characters) of the analog input U4: Name

U5:

- ac voltage base value for analog input U5: U5b
- voltage transformer input U5 nominal primary to secondary scale value: U5Scale
- Name (of up to 13 characters) of the analog input U5: Name

I1:

- ac current base value for analog input I1: I1b
- current transformer input I1 nominal primary to secondary scale value: I1Scale
- Name (of up to 13 characters) of the analog input I1: Name

I2:

- ac current base value for analog input I2: I2b
- current transformer input I2 nominal primary to secondary scale value: I2Scale
- Name (of up to 13 characters) of the analog input I2: Name

I3:

- ac current base value for analog input I3: I3b
- current transformer input I3 nominal primary to secondary scale value: I3Scale
- Name (of up to 13 characters) of the analog input I3: Name

I4:

- ac current base value for analog input I4: I4b
- current transformer input I4 nominal primary to secondary scale value: I4Scale
- Name (of up to 13 characters) of the analog input I4: Name

I5:

- ac current base value for analog input I5: I5b

- current transformer input I5 nominal primary to secondary scale value: I5Scale
- Name (of up to 13 characters) of the analog input I5: Name

U:

- Name (of up to 13 characters) of the average voltage U: Name

I:

- Name (of up to 13 characters) of the average current I: Name

P:

- Name (of up to 13 characters) of the active power P: Name

Q:

- Name (of up to 13 characters) of the reactive power Q: Name

S:

- Name (of up to 13 characters) of the apparent power S: Name

f:

- Name (of up to 13 characters) of the frequency value f: Name

The names of the first 10 quantities automatically appears in the REVAL evaluation program for each reported disturbance.

The PST Parameter Setting Tool has to be used in order to set all remaining parameters that are related to different alternating measuring quantities.

In the settings menu it is possible to set all monitoring operating values and the hysteresis directly in the basic units of the measured quantities for each channel and for each quantity.

The dead-band limits can be set directly in the corresponding units of the observed quantity for the:

- Amplitude dead-band supervision (ADBS)
- Integrating dead-band supervision (IDBS)

The IDBS area is defined by the following formula:

$$IDBS = \frac{IDeadB}{ReadFreq} = IDeadB \cdot ts$$

(Equation 11)

Where:

IDeadB	is a set operating value for IDBS in corresponding unit.
ReadFreq	is the reading frequency. It has a constant value of 1Hz.
ts = 1/ReadFreq	is the time between two samples (fixed to 1s).

The setting value for IDBS is IDeadB, and is expressed in the measuring unit of the monitored quantity (kV, A, MW, Mvar, MVA or Hz). The value is reported if the time integral area is greater than the value IDBS.

If a 0.1 Hz variation in the frequency for 10 minutes (600 s) is the event that should cause the reporting of the frequency monitored value, than the set value for IDeadB is 60 Hz.

The hysteresis can be set under the setting Hysteres.

Alarm and warning thresholds have to be set respectively under the settings HiAlarm (LowAlarm) and HiWarn (LowWarn).

Note!

It is important to set the time for periodic reporting and deadband in an optimized way to minimize the load on the station bus.

Chapter 9 Data communication

About this chapter

This chapter describes the data communication and the associated hardware.

1 Serial communication

1.1 Serial communication, SPA

1.1.1 Application

Fibre optic loop

The SPA communication is mainly used for SMS. It can include different numerical relays/terminals with remote communication possibilities. The fibre optic loop can contain < 20-30 terminals depending on requirements on response time. Connection to a personal computer (PC) can be made directly (if the PC is located in the substation) or by telephone modem through a telephone network with ITU (CCITT) characteristics.

Table 12: Max distances between terminals/nodes

glass	< 1000 m according to optical budget
plastic	< 25 m (inside cubicle) according to optical budget

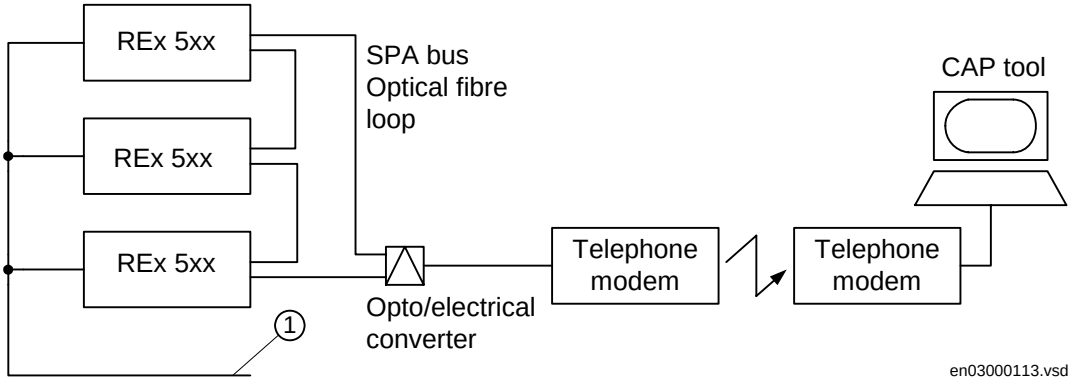

Where:

1 Minute pulse synchronization from station clock to obtain ± 1 ms accuracy for time tagging within the substation

Figure 52: Example of SPA communication structure for a station monitoring system

RS485 multidrop

The SPA communication is mainly used for SMS. It can include different numerical relays/terminals with remote communication possibilities. Connection to a personal computer (PC) can be made directly (via a suitable RS485 interface) if the PC is located in the substation or by telephone modem through a telephone network with ITU (CCITT) characteristics.

Max distance for the whole network is 100 meter.

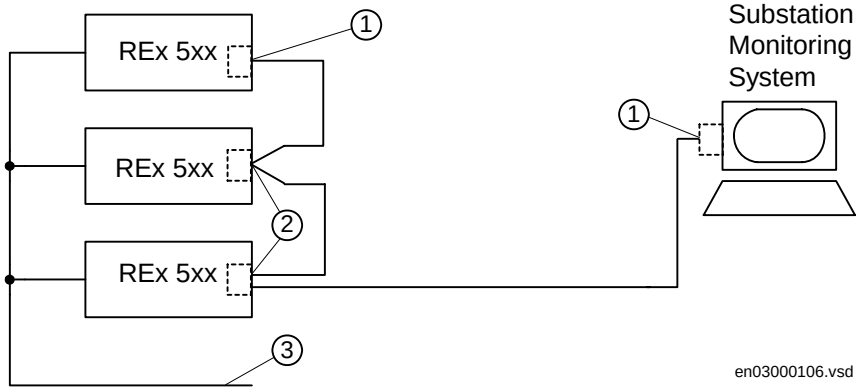

Where:

1 Terminated RS485 interface

2 Unterminated RS485 interface

3 Minute pulse synchronization from station clock to obtain ± 1 ms accuracy for time tagging within the substation

Figure 53: Example of SPA communication structure for a station monitoring system with RS485 multidrop

1.1.2 Functionality

The SPA protocol V2.5 is an ASCII-based protocol for serial communication. The communication is based on a master-slave principle, where the terminal is a slave and the PC is the master. Only one master can be applied on each optic fibre loop or RS485 network. A program is needed in the master computer for interpretation of the SPA-bus codes and for translation of the settings sent to the terminal.

1.1.3 Design

When communicating locally with a Personal Computer (PC) in the station, using the rear SPA port, the only hardware needed for a station monitoring system is:

- Optical fibres
- Opto/electrical converter for the PC
- PC

or

- A correct RS485 network installation according to EIA Standard RS-485, please refer to the Installation and commissioning manual
- PC

When communicating remotely with a PC using the rear SPA port, the same hardware is needed plus telephone modems.

The software needed in the PC, either local or remote, is CAP 540.

When communicating to a front-connected PC, the only hardware required is the special front-connection cable.

1.1.4 Calculations

The parameters for the SPA communication are set via the local HMI. Refer to the Technical reference manual for setting parameters and path in local HMI.

To define the protocols to be used on the two rear communication ports, a setting is done on the local HMI. Refer to Installation and commissioning manual for setting procedure.

When the communication protocols have been selected, the terminal is automatically restarted.

The most important settings in the terminal for SPA communication are the slave number and baud rate (communication speed). These settings are absolutely essential for all communication contact to the terminal.

These settings can only be done on the local HMI for rear channel communication and for front channel communication.

The slave number can be set to any value from 1 to 899, as long as the slave number is unique within the used SPA loop.

The baud rate, which is the communication speed, can be set to between 300 and 38400 baud. See technical data to determine the rated communication speed for the selected communication interfaces.The baud rate should be the same for the whole station, although different baud rates in a loop are possible. If different baud rates in the same fibre optical loop or RS485 network are used, consider this when making the communication setup in the communication master, the PC. The maximum baud rate of the front connection is limited to 9600 baud.

For local fibre optic communication, 19200 or 38400 baud is the normal setting. If telephone communication is used, the communication speed depends on the quality of the connection and on the type of modem used. But remember that the terminal does not adapt its speed to the actual communication conditions, because the speed is set on the HMI of the terminal.

1.2 Serial communication, IEC (IEC 60870-5-103 protocol)

1.2.1 Application

Fibre optic loop

The IEC 60870-5-103 communication protocol is mainly used when a protection terminal communicates with a third party control or monitoring system. This system must have a software that can interpret the IEC 60870-5-103 communication messages.

Table 13: Max distances between terminals/nodes

glass	< 1000 m according to optical budget
plastic	< 25 m (inside cubicle) according to optical budget

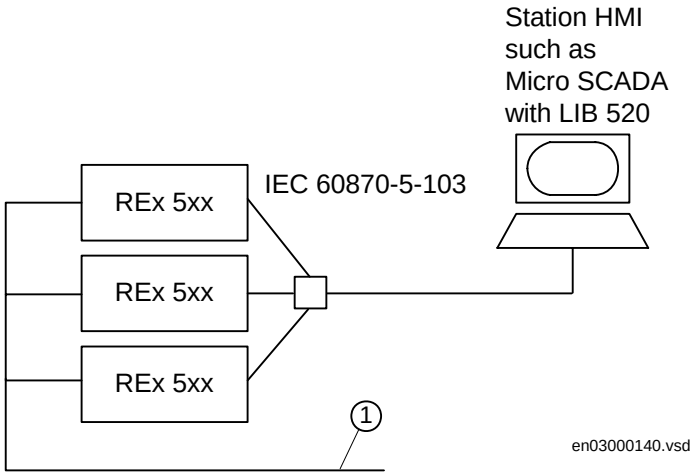

Where:

1 Minute pulse synchronization from station clock to obtain ± 1 ms accuracy within the substation

Figure 54: Example of IEC communication structure for a station monitoring system

RS485 multidrop

The IEC 60870-5-103 communication protocol is mainly used when a protection terminal communicates with a third party control or monitoring system. This system must have a software that can interpret the IEC 60870-5-103 communication messages.

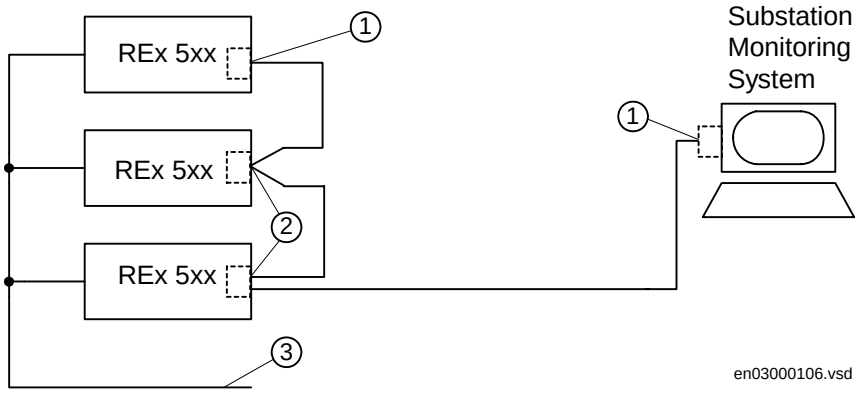

Where:

1 Terminated RS485 interface

2 Unterminated RS485 interface

3 Minute pulse synchronization from station clock to obtain ±1 ms accuracy within the substation

Figure 55: Example of IEC communication structure for a station monitoring system with RS485 multidrop

1.2.2 Functionality

The IEC 60870-5-103 is an unbalanced (master-slave) protocol for coded-bit serial communication exchanging information with a control system. In IEC terminology a primary station is a master and a secondary station is a slave. The communication is based on a point to point principle. The master must have a software that can interpret the IEC 60870-5-103 communication messages. For detailed information about IEC 60870-5-103, refer to the IEC60870 standard part 5: Transmission protocols, and to the section 103: Companion standard for the informative interface of protection equipment.

1.2.3 Design

General

The protocol implementation in REx 5xx consists of the following functions:

- Event handling
- Report of analog service values (measurands)
- Fault location
- Command handling
  - Autorecloser ON/OFF
  - Teleprotection ON/OFF
  - Protection ON/OFF

  - LED reset
  - Characteristics 1 - 4 (Setting groups)
- File transfer (disturbance files)
- Time synchronization

Hardware

When communicating locally with a Personal Computer (PC) or a Remote Terminal Unit (RTU) in the station, using the SPA/IEC port, the only hardware needed is:

- Optical fibres, glass/plastic
- Opto/electrical converter for the PC/RTU
- PC/RTU

or

- A correct RS485 network installation according to EIA Standard RS-485, please refer to the Installation and commissioning manual
- PC/RTU

Events

The events created in the terminal available for the IEC 60870-5-103 protocol are based on the event function blocks EV01 - EV06. These function blocks include the function type and the information number for each event input, which can be found in the IEC-document. See also the description of the Event function.

Measurands

The measurands can be included as type 3.1, 3.2, 3.3, 3.4 and type 9 according to the standard. Measurands sent on the IEC 60870-5-103 protocol should be multiplied with 1706.25 in the master system to be correctly presented.

Fault location

The fault location is expressed in reactive ohms. In relation to the line length in reactive ohms, it gives the distance to the fault in percent. The data is available and reported when the fault locator function is included in the terminal.

Commands

The commands defined in the IEC 60870-5-103 protocol are represented in a dedicated function block. This block has output signals according to the protocol for all available commands.

File transfer

The file transfer functionality is based on the Disturbance recorder function. The analog and binary signals recorded will be reported to the master. The eight last disturbances, that are recorded, are available for transfer to the master. A file that has been transferred and acknowledged by the master can not be transferred again.

The binary signals, that are reported, are those that are connected to the disturbance function blocks DRP1 - DRP3. These function blocks include the function type and the information number for each signal. See also the description of the Disturbance report.

The analog channels, that are reported, are the first four current inputs and the first four voltage inputs.

1.2.4 Calculation

Settings from the local HMI

The parameters for IEC communication are set via the local HMI. Refer to the Technical reference manual for setting parameters and path in local HMI.

To define the protocols to be used on the two rear communication ports, a setting is done on the local HMI. Refer to Installation and commissioning manual for setting procedure.

When the communication protocol have been selected, the terminal is automatically restarded.

The settings for IEC 60870-5-103 communication are the following:

- Individually blocking of commands
- Setting of measurand type
- Setting of main function type and activation of main function type
- Settings for slave number and baud rate (communication speed)
- Command for giving Block of information command

Each command has its own blocking setting and the state can be set to OFF or ON. The OFF state corresponds to non-blocked state and ON corresponds to blocked state.

The type of measurands can be set to report standardised types, Type 3.1, Type 3.2, Type 3.3, Type 3.4 or Type 9.

The use of main function type is to facilitate the engineering work of the terminal.The main function type can be set to values according to the standard, this is, between 1 and 255. The value zero is used as default and corresponds to not used.

The setting for activation of main function type can be set to OFF or ON. The OFF state corresponds to non-activated state and ON corresponds to activated state. When activated the main function type overrides all other settings for function type within the terminal, that is, function type settings for event function and disturbance recorder function. When set to OFF, function type settings for event function and disturbance recorder function use their own function type settings made on the function blocks for the event function and disturbance recorder respectively. Though for all other functions they use the main function type even when set to OFF.

The slave number can be set to any value between 0 to 255.

The baud rate, the communication speed, can be set either to 9600 Baud or 19200 Baud. See technical data to determine the rated communication speed for the selected communication interfaces.

Information command with the value one (1) blocks all information sent to the master and abort any GI procedure or any file transfer in process. Thus issuing the command with the value set to zero (0) will allow information to be polled by the master.

The dialogue to operate the output from the BlockOfInformation command function is performed from different state as follows:

1. Selection active; select the:
   - C button, and then the No box activates.
   - Up arrow, and then New: 0 changes to New: 1. The up arrow changes to the down arrow.
   - E button, and then the Yes box activates.
2. Yes box active; select the:
   - C button to cancel the action and return to the BlockOfInfo window.
   - E button to confirm the action and return to the BlockOfInfo window.
   - Right arrow to activate the No box.
3. No box active; select the:
   - C button to cancel the action and return to the BlockOfInfo window.
   - E button to confirm the action and return to the BlockOfInfo window.
   - Left arrow to activate the Yes box.

Settings from the CAP tool

Event

For each input of the Event function there is a setting for the information number of the connected signal. The information number can be set to any value between 0 and 255. In order to get proper operation of the sequence of events the event masks in the event function shall be set to ON_CHANGE. For single-command signals, the event mask shall be set to ON_SET.

In addition there is a setting on each event block for function type. Refer to description of the Main Function type set on the local HMI.

Commands

As for the commands defined in the protocol there is a dedicated function block with eight output signals. The configuration of these signals are made by using the CAP tool.

To realise the BlockOfInformation command, which is operated from the local HMI, the output BLKINFO on the IEC command function block ICOM has to be connected to an input on an event function block. This input shall have the information number 20 (monitor direction blocked) according to the standard.

File transfer

For each input of the Disturbance recorder function there is a setting for the information number of the connected signal. The information number can be set to any value between 0 and 255. To be able to correctly indicate SOF and FAN (see IEC 60870-5-103 7.2.6.24 and 7.2.6.6) all protection START signals must be combined into one signal, which is connected to an input of the DRP function block. This input should have information number 84,General Start. Furthermore, the combined signal should also be connected to an EV function block and have information number 84 configured. The TRxx-TRIP signal should in the same way be connecter to DRP and EV function blocks with information number 68, General Trip configured.

Furthermore there is a setting on each input of the Disturbance recorder function for the function type. Refer to description of Main Function type set on the local HMI.

1.3 Serial communication, LON

1.3.1 Application

An optical network can be used within the Substation Automation system. This enables communication with the terminal through the LON bus from the operator's workplace, from the control center and also from other terminals.

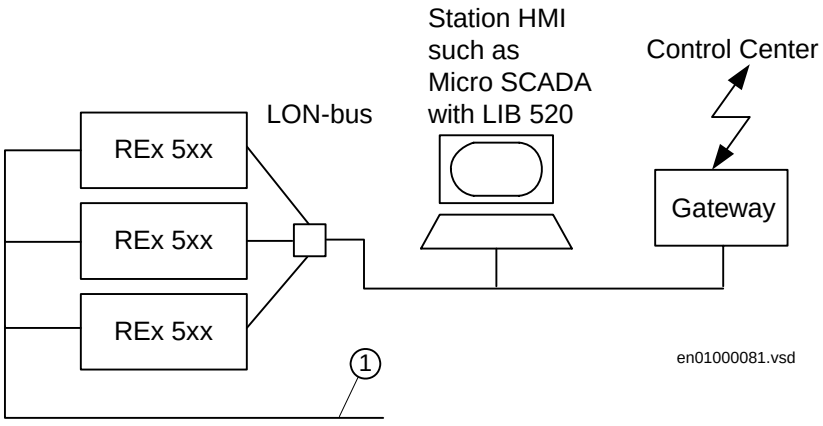

Where:

1 Minute pulse synchronization from station clock to obtain 1 ms accuracy within the substation

Figure 56: Example of LON communication structure for substation automation

1.3.2 Functionality

The LON protocol is specified in the LonTalkProtocol Specification Version 3 from Echelon Corporation. This protocol is designed for communication in control networks and is a peer-to-peer protocol where all the devices connected to the network can communicate with each other directly. For more information of the bay-to-bay communication, refer to the sections Event function and Multiple command function.

1.3.3 Design

The hardware needed for applying LON communication depends on the application, but one very central unit needed is the LON Star Coupler and optical fibres connecting the star coupler to the terminals. To communicate with the terminals from MicroSCADA, the application library LIB 520 is needed.

The HV/Control and the HV/REx 500 software modules are included in the LIB 520 high-voltage process package, which is a part of the Application Software Library within MicroSCADA applications.

The HV/Control software module is intended to be used for control functions in REx 5xx terminals. This module contains the process picture, dialogues and process database for the control application in the MicroSCADA.

The HV/REx 500 software module is used for setting and monitoring of the terminal via the MicroSCADA screen. At use of this function the PST Parameter Setting Tool (of v1.1 or higher) is required.

1.3.4 Calculations

Refer to the Technical reference manual for setting parameters and path in local HMI.

Use the LNT, LON Network Tool to set the LON communication. This is a software tool applied as one node on the LON bus. In order to communicate via LON, the terminals need to know which node addresses the other connected terminals have, and which network variable selectors should be used. This is organised by the LNT.

The node address is transferred to the LNT via the local HMI by setting the parameter ServicePinMsg=YES. The node address is sent to the LNT via the LON bus, or the LNT can scan the network for new nodes.

The communication speed of the LON bus is set to the default of 1.25 Mbit/s. This can be changed by the LNT.

If the LON communication from the terminal stops, caused by setting of illegal communication parameters (outside the setting range) or by another disturbance, it is possible to reset the LON port of the terminal.

By setting the parameter LONDefault=YES, the LON communication is reset in the terminal, and the addressing procedure can start from the beginning again.

There are a number of session timers which can be set via the local HMI. These settings are only for advanced use and should only be changed after recommendation from ABB.

1.4 Serial communication modules

1.4.1 SPA/IEC

The serial communication module for SPA/IEC is placed in a slot at the rear of the main processing module. One of the following conection options is available for serial communication:

- two plastic fibre cables; (Rx, Tx) or
- two glass fibre cables; (Rx, Tx) or
- galvanic RS485

The type of connection is chosen when ordering the terminal.

The fibre optic SPA/IEC port can be connected point-to-point, in a loop, or with a star coupler. The incoming optical fibre is connected to the Rx receiver input and the outgoing optical fibre to the Tx transmitter output. The module is identified with a number on the label on the module.

The electrical RS485 can be connected in multidrop with maximum 4 terminals.

Note!

Pay special attention to the instructions concerning the handling, connection, etc. of the optical fibre cables.

1.4.2 LON

The serial communication module for LON is placed in a slot at the rear of the Main processing module. One of the following options is available for serial communication:

- two plastic fibre cables; (Rx, Tx) or
- two glass fibre cables; (Rx, Tx)

The type of connection is chosen when ordering the terminal.

The incoming optical fibre is connected to the Rx receiver input and the outgoing optical fibre to the Tx transmitter output. The module is identified with a number on the label on the module.

Note!

Pay special attention to the instructions concerning the handling, connection, etc. of the optical fibre cables.

Chapter 10 Hardware modules

About this chapter

This chapter describes the different hardware modules.

1 Platform

1.1 General

The REx 5xx platform consists of a case, hardware modules and a set of common functions.

The closed and partly welded steel case makes it possible to fulfill stringent EMC requirements. Three different sizes of the case are available to fulfill the space requirements of different terminals. The degree of protection is IP 40 according to IEC 60529 for cases with the widths 1/2x19" and 3/4x19". IP 54 can be obtained for the front area in flush and semiflush applications. Mounting kits are available for rack, flush, semiflush or wall mounting.

All connections are made on the rear of the case. Screw compression type terminal blocks are used for electrical connections. Serial communication connections are made by optical fibre connectors type Hewlett Packard (HFBR) for plastic fibres or bayonet type ST for glass fibres.

A set of hardware modules are always included in a terminal. Application specific modules are added to create a specific terminal type or family.

The common functions provide a terminal with basic functionality such as self supervision, I/O-system configurator, real time clock and other functions to support the protection and control system of a terminal.

1.2 Platform configuration

Table 14: Basic, always included, modules

Module	Description
Backplane module (BPM)	Carries all internal signals between modules in a terminal. The size of the module depends on the size of the case.
Power supply module (PSM)	Including a regulated DC/DC converter that supplies auxiliary voltage to all static circuits. • For case size 1/2x19" and 3/4x19" a version with four binary inputs and four binary outputs used. An internal fail alarm output is also available.
Main processing module (MPM)	Module for overall application control. All information is processed or passed through this module, such as configuration, settings and communication. Carries up to 12 digital signal processors, performing all measuring functions.
Human machine interface (LCD-HMI)	The module consist of LED:s, a LCD, push buttons and an optical connector for a front connected PC
Signal processing module (SPM)	Module for protection algorithm processing. Carries up to 12 digital signal processors, performing all measuring functions.

Table 15: Application specific modules

Module	Description
Binary I/O module (IOM)	Module with 8 optically isolated binary inputs, 10 outputs and 2 fast signalling outputs.
Transformer input module (TRM)	Used for galvanic separation of voltage and/or current process signals and the internal circuitry.
A/D conversion module (ADM)	Used for analog to digital conversion of analog process signals galvanically separated by the TRM.
Serial communication module (SCM)	Used for SPA/LON/IEC communication

1.3 1/2x19" platform

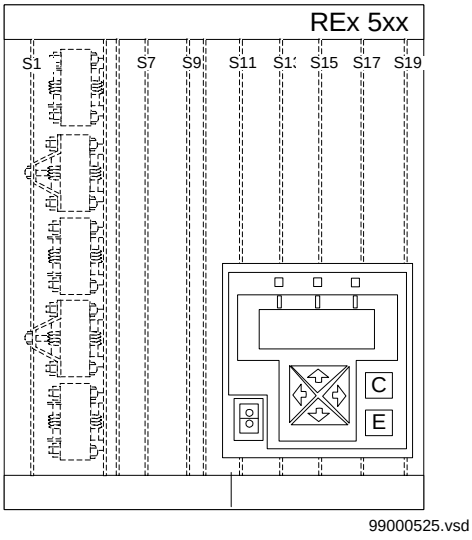

Figure 57: Hardware structure of the 1/2x19” case

2 Transformer module (TRM)

Current and voltage input transformers form an insulating barrier between the external wiring and internal circuits of the terminal. They adapt the values of the measuring quantities to the static circuitry and prevent the disturbances to enter the terminal. Maximum 10 analog input quantities can be connected to the transformer module (TRM). A TRM with maximum number of transformers has:

- Five voltage transformers. The rated voltage is selected at order.
- Five current transformers. The rated currents are selected at order.

The input quantities are the following:

- Three phase currents
- Residual current of the protected line
- Residual current of the parallel circuit (if any) for compensation of the effect of the zero sequence mutual impedance on the fault locator measurement or residual current of the protected line but from a parallell core used for CT circuit supervision function or independent earthfault function.
- Three phase voltages
- Open delta voltage for the protected line (for an optional directional earth-fault protection)
- Phase voltage for an optional synchronism and energizing check.

The actual configuration of the TRM depends on the type of terminal and included functions. See figure 58 and figure 59.

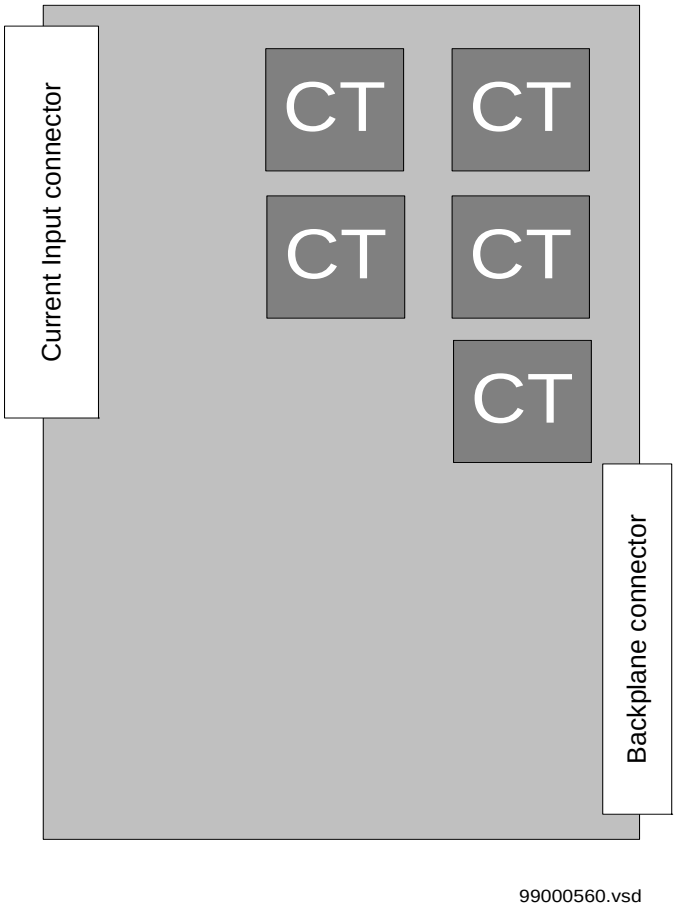

Figure 58: Block diagram of the TRM for REL 551, Line differential protection

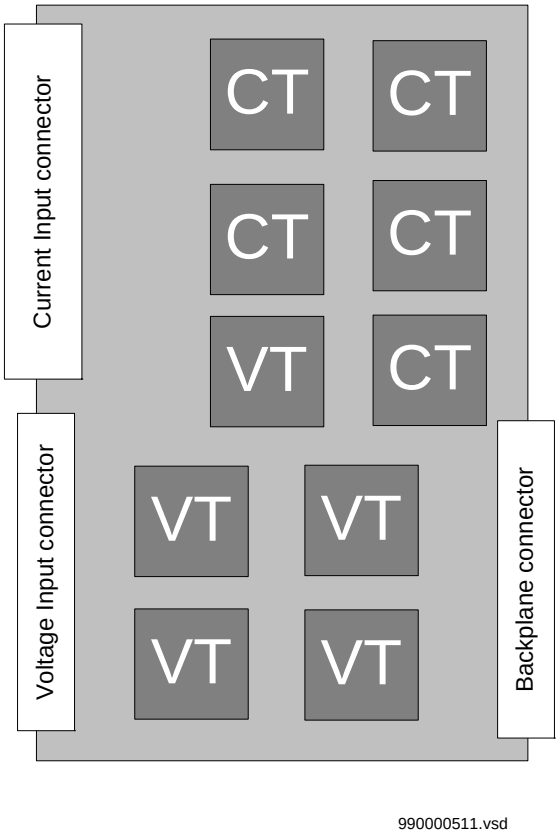

Figure 59: Block diagram of the TRM with maximum number of transformers used in most REx 5xx.

3 A/D module (ADM)

The incoming signals from the intermediate current transformers are adapted to the electronic voltage level with shunts. To gain dynamic range for the current inputs, two shunts with separate A/D channels are used for each input current. By that a 16-bit dynamic range is obtained with a 12 bits A/D converter.

The next step in the signal flow is the analog filter of the first order, with a cut-off frequency of 500 Hz. This filter is used to avoid aliasing problems.

The A/D converter has a 12-bit resolution. It samples each input signal (5 voltages and 2x5 currents) with a sampling frequency of 2 kHz.

Before the A/D-converted signals are transmitted to the signal processing module, the signals are band-pass filtered and down-sampled to 1 kHz in a digital signal processor (DSP).

The filter in the DSP is a numerical filter with a cut-off frequency of 250 Hz.

The transmission of data between the A/D-conversion module and the signal processing module is done on a supervised serial link of RS485 type. This transmission is performed once every millisecond and contains information about all incoming analog signals.

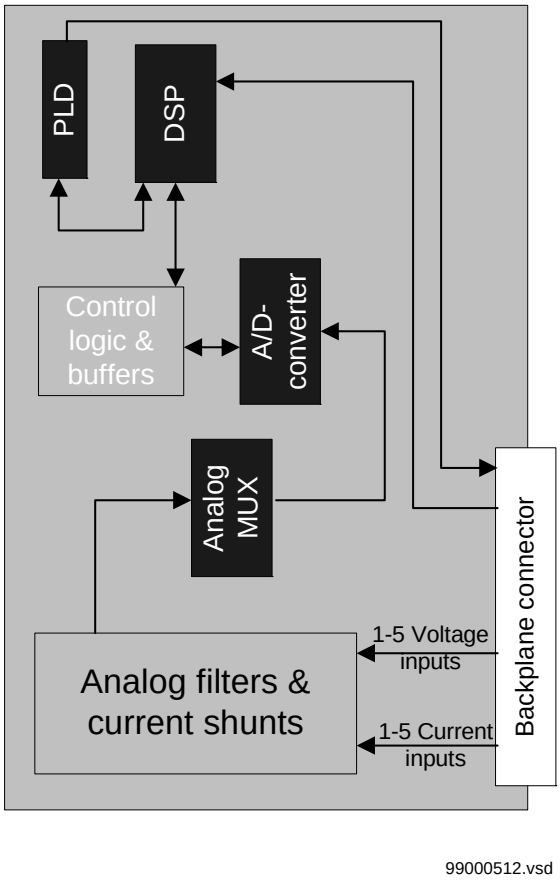

Figure 60: Block diagram for the ADM

4 Main processing module (MPM)

The terminal is based on a pipelined multi-processor design. The 32-bit main controller receives the result from the Signal processors every millisecond.

All memory management are also handled by the main controller. The module has 8MB of disc memory and 1MB of code memory. It also has 8MB of dynamic memory.

The controller also serves four serial links: one high-speed CAN bus for Input/Output modules and three serial links for different types of HMI communication.

The main controller makes all decisions, based on the information from the Signal processors and from the binary inputs. The decisions are sent to the different output modules and to these communication ports:

- Local HMI module including a front-connected PC, if any, for local human-machine communication.
- LON communication port at the rear (option).
- SPA/IEC communication port at the rear (option)

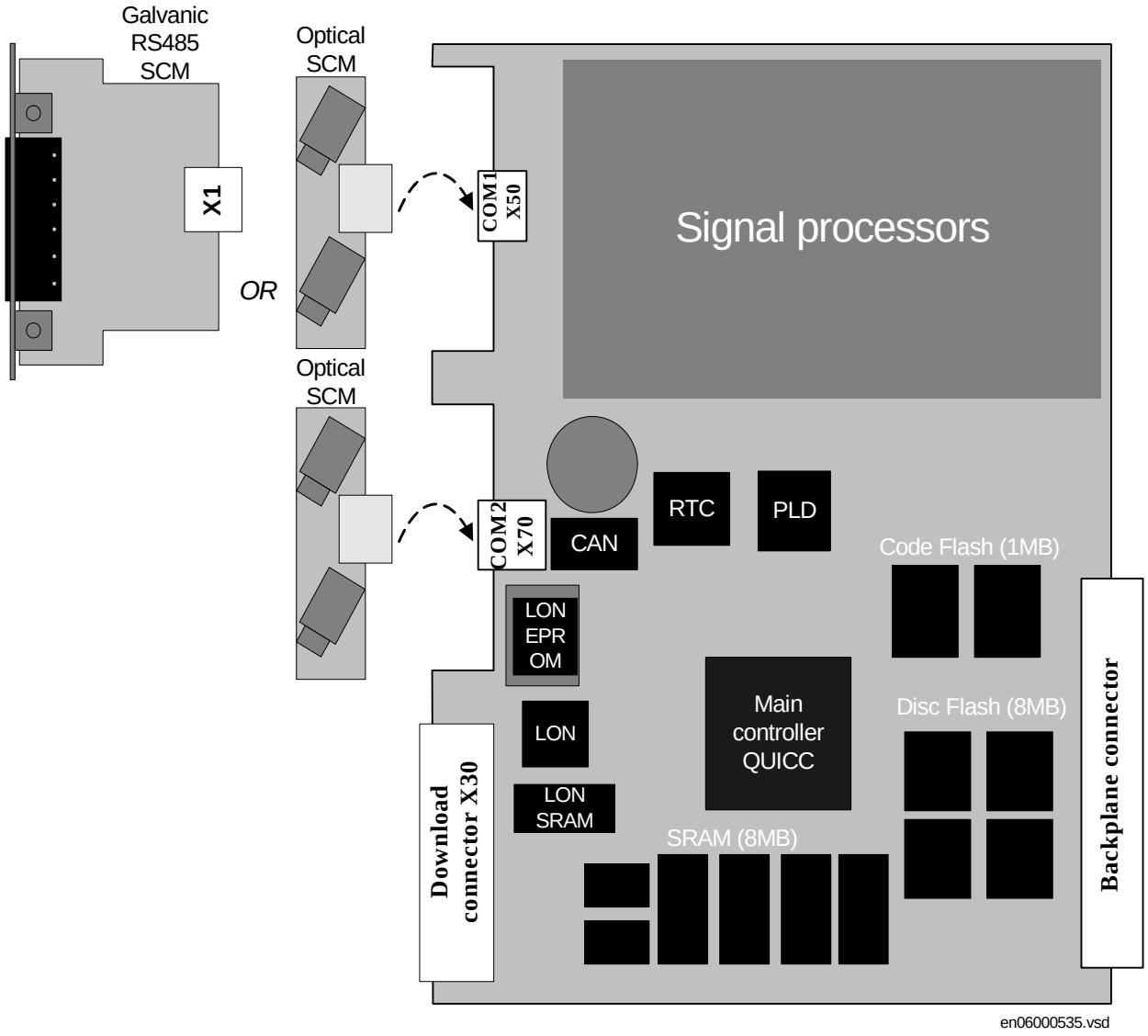

Figure 61: Block diagram for the MPM

To allow easy upgrading of software in the field a special connector is used, the Download connector.

5 Input/Output modules

5.1 General

The number of inputs and outputs in a REx 5xx terminal can be selected in a variety of combinations depending on the size of the rack. There is no basic I/O configuration of the terminal. The table below shows the number of available inputs or output modules for the different platform sizes.

Platform size	1/1x19”	3/4x19”	1/2x19”
I/O slots available	13		3

A number of signals are available for signalling purposes in the terminal and all are freely programmable. The voltage level of the input/output modules is selectable at order.

Figure 62 shows the operating characteristics of the binary inputs of the four voltage levels.

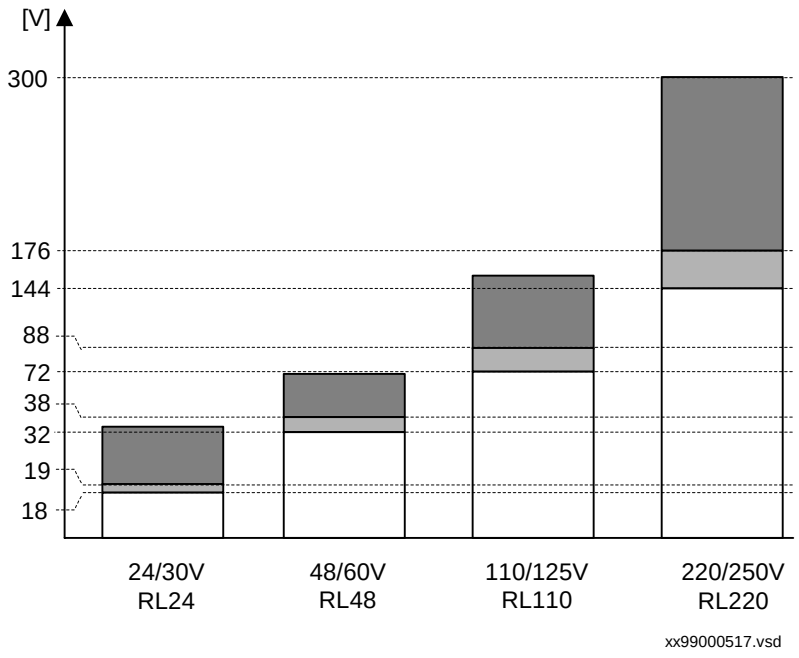

Figure 62: Voltage dependence for the binary inputs

Table 16: Input voltage ranges explained

	Guaranteed operation
	Operation uncertain
	No operation

The I/O modules communicate with the Main Processing Module via the CAN-bus on the backplane.

The design of all binary inputs enables the burn off of the oxide of the relay contact connected to the input, despite the low, steady-state power consumption, which is shown in figure .

5.2 Binary I/O module (IOM)

The binary in/out module contains eight optically isolated binary inputs and twelve binary output contacts. Ten of the output relays have contacts with a high-switching capacity (trip and signal relays). The remaining two relays are of reed type and for signalling purpose only. The relays are grouped together as can be seen in the terminal diagram.

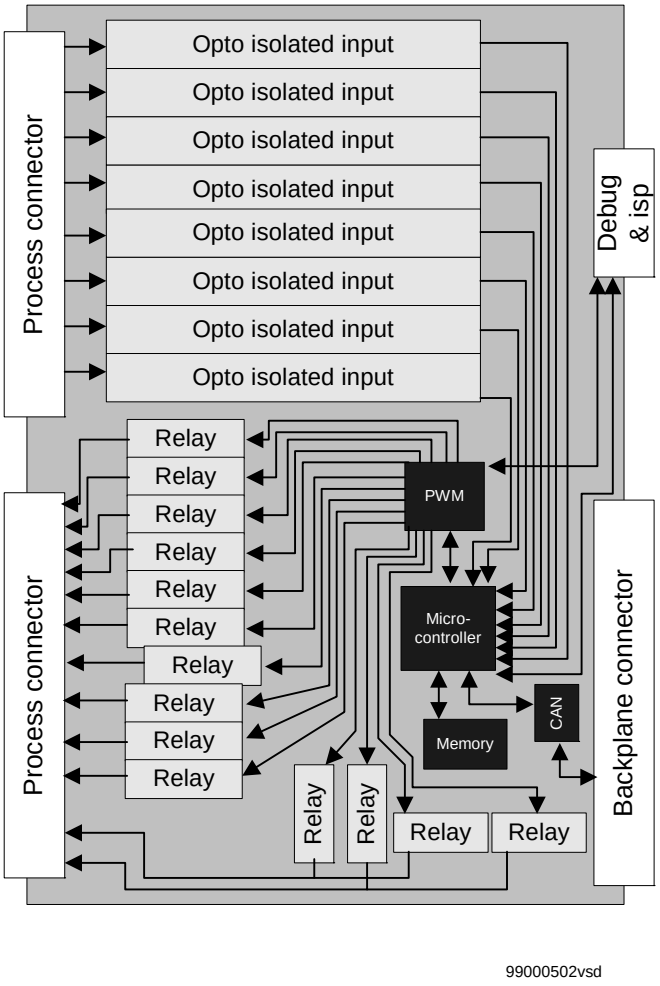

Figure 63: Block diagram for the binary input/output module

6 Power supply module (PSM)

The power supply module (PSM) contains a built-in, self-regulated DC/DC converter that provides full isolation between the terminal and the external battery system. The wide input voltage range of the DC/DC converter converts an input voltage range from 48 to 250V, including a +/-20% tolerance on the EL voltage. The output voltages are +5, +12 and -12 Volt.

The PSM, used in the 1/2x19” and 3/4x19” platforms, has built-in binary I/O with four optically isolated inputs and five outputs. One of the binary outputs is dedicated for internal fail.

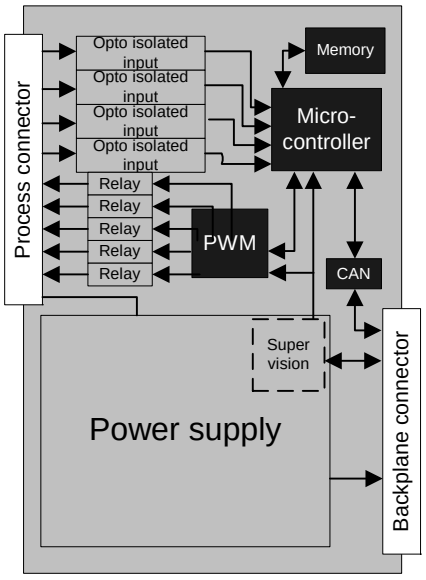

Figure 64: Block diagram for the PSM used in 1/2x19” and 3/4x19” cases.

7 Local LCD human machine interface (LCD-HMI)

7.1 Application

The local LCD HMI module consists of three LEDs (red, yellow, and green), an LCD with four lines, each containing 16 characters, six buttons and an optical connector for PC communication.

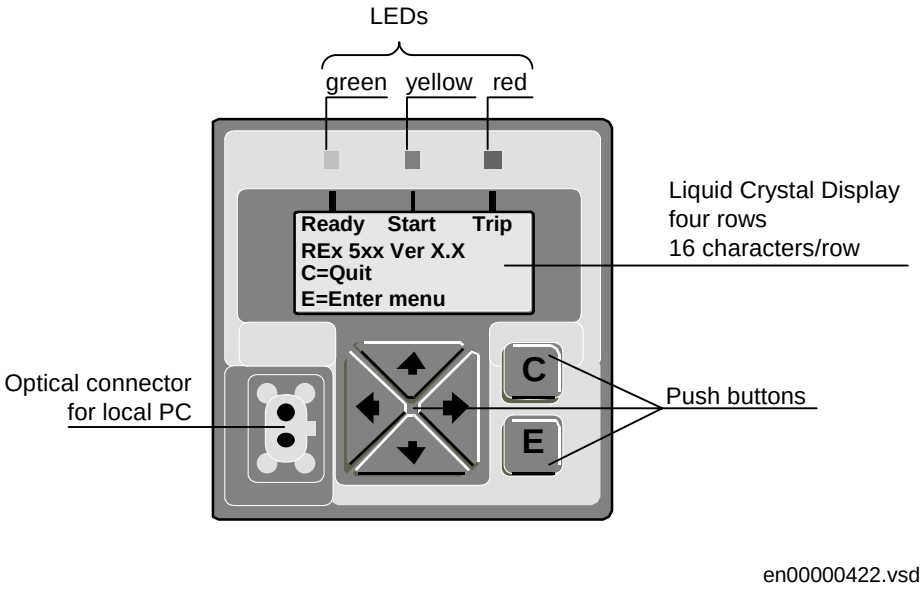

Figure 65: Local LCD human machine interface (LCD-HMI)

The PC is connected via a special cable, that has a built-in optical to electrical interface. Thus, disturbance-free local serial communication with the personal computer is achieved. Software tools are available from ABB for this communication. A PC greatly simplifies the communication with the terminal. It also gives the user additional functionality which is unavailable on the LCD HMI because of insufficient space. The LEDs on the HMI display this information:

Table 17: The local LCD-HMI LEDs

LED indication	Information
Green:	
Steady	In service
Flashing	Internal failure
Dark	No power supply
Yellow:	
Steady	Disturbance Report triggered
Flashing	Terminal in test mode
Red:	
Steady	Trip command issued from a protection function or disturbance recorder started
Flashing	Blocked

8 Serial communication modules (SCM)

8.1 Design, SPA/IEC

Refer to chapter Data communication.

8.2 Design, LON

Refer to chapter Data communication.

1MRK 505 112-UEN

ABB Power Technologies AB
Substation Automation Products
SE-721 59 Västerås
Sweden
Telephone: +46 (0) 21 34 20 00
Facsimile: +46 (0) 21 14 69 18
Internet: www.abb.com/substationautomation

Printed on recycled and ecolabelled paper at Elanders Novum