Relion® 670 series

Generator protection REG670 2.0 ANSI Commissioning Manual

Power and productivity
for a better world™

Document ID: 1MRK 502 053-UUS
Issued: May 2014
Revision: -
Product version: 2.0

Copyright

Trademarks

Warranty

Please inquire about the terms of warranty from your nearest ABB representative.

Disclaimer

The data, examples and diagrams in this manual are included solely for the concept or product description and are not to be deemed as a statement of guaranteed properties. All persons responsible for applying the equipment addressed in this manual must satisfy themselves that each intended application is suitable and acceptable, including that any applicable safety or other operational requirements are complied with. In particular, any risks in applications where a system failure and/or product failure would create a risk for harm to property or persons (including but not limited to personal injuries or death) shall be the sole responsibility of the person or entity applying the equipment, and those so responsible are hereby requested to ensure that all measures are taken to exclude or mitigate such risks.

This document has been carefully checked by ABB but deviations cannot be completely ruled out. In case any errors are detected, the reader is kindly requested to notify the manufacturer. Other than under explicit contractual commitments, in no event shall ABB be responsible or liable for any loss or damage resulting from the use of this manual or the application of the equipment.

Conformity

This product complies with the directive of the Council of the European Communities on the approximation of the laws of the Member States relating to electromagnetic compatibility (EMC Directive 2004/108/EC) and concerning electrical equipment for use within specified voltage limits (Low-voltage directive 2006/95/EC). This conformity is the result of tests conducted by ABB in accordance with the product standard EN 60255-26 for the EMC directive, and with the product standards EN 60255-1 and EN 60255-27 for the low voltage directive. The product is designed in accordance with the international standards of the IEC 60255 series and ANSI C37.90.

Table of contents

Section 1 Introduction....11
This manual....11
Intended audience....11
Product documentation....12
Product documentation set....12
Document revision history....13
Related documents....14
Document symbols and conventions....14
Symbols....14
Document conventions....15
IEC61850 edition 1 / edition 2 mapping....16

Section 2 Safety information....25
Symbols on the product....25
Warnings....25
Note signs....28

Section 3 Available functions....29
Main protection functions....29
Back-up protection functions....30
Control and monitoring functions....31
Communication....34
Basic IED functions....35

Section 4 Starting up....39
Factory and site acceptance testing....39
Commissioning checklist....39
Checking the power supply....40
Energizing the IED....40
Checking the IED operation....40
IED start-up sequence....40
Energizing REX060....41
REX060 start up sequence....41
Setting up communication between PCM600 and the IED....41
Writing an application configuration to the IED....46
Checking CT circuits....47
Checking VT circuits....48

Using the RTXP test switch....48
Checking the binary I/O circuits....49
Binary input circuits....49
Binary output circuits....49
Checking optical connections....49

Section 5 Configuring the IED and changing settings....51
Overview....51
Configuring analog CT inputs....52
Reconfiguring the IED....53

Section 6 Calibrating injection based sensitive rotor earth fault protection....55
Commissioning process....55
Commissioning tool ICT....55
Launching injection commissioning tool (ICT)....58
Performing calibration....59
Acquiring references....61
Verifying calibration....63
Auditing....65
Editing features in graph....66
Logging measurements to file....68

Section 7 Calibrating injection based 100% stator earth fault protection....69
Commissioning process....69
Commissioning tool ICT....69
Launching injection commissioning tool (ICT)....72
Performing calibration....74
Acquiring references....76
Verifying calibration....78
Auditing....80
Editing features in graph....81
Logging measurements to file....82

Section 8 Establishing connection and verifying the SPA/IEC communication....85
Entering settings....85
Entering SPA settings....85
Entering IEC settings....85
Verifying the communication....86
Verifying SPA communication....86

Verifying IEC communication....87
Fibre optic loop....87
Optical budget calculation for serial communication with SPA/IEC 88

Section 9 Establishing connection and verifying the LON communication....89
Communication via the rear ports 89
LON communication....89
The LON Protocol....90
Hardware and software modules....90
Optical budget calculation for serial communication with LON 92

Section 10 Establishing connection and verifying the IEC 61850 communication....95
Overview....95
Setting the station communication....95
Verifying the communication....96

Section 11 Testing IED operation....97
Preparing for test....97
Requirements....97
Preparing the IED to verify settings....98
Activating the test mode....99
Preparing the connection to the test equipment....100
Connecting the test equipment to the IED....101
Releasing the function to be tested....102
Verifying analog primary and secondary measurement....103
Testing the protection functionality....104

Section 12 Testing functionality by secondary injection....105
Testing disturbance report....105
Introduction....105
Disturbance report settings....105
Disturbance recorder (DR)....105
Event recorder (ER) and Event list (EL)....106
Identifying the function to test in the technical reference manual 107
Differential protection....107
Transformer differential protection T2WPDIF (87T) and T3WPDIF (87T)....107
Verifying the settings....107
Completing the test....108
High impedance differential protection HZPDIF (87)....108

Verifying the settings....109
Completing the test....109
Generator differential protection GENPDIF (87G)....110
Verifying the settings....110
Completing the test....110
Restricted earth-fault protection, low impedance REFPDIF (87N)....111
Verifying the settings....111
Completing the test....111
Impedance protection....112
Full scheme distance protection, mho characteristic ZMHPDIS (21)....112
Distance protection zones, quadrilateral characteristic ZMFPDIS (21)....112
Measuring the operating limit of set values in cases without shaped load encroachment characteristics (OperationLdCmp=disabled)....116
Measuring the operating time of distance protection zones....117
Completing the test....117
Distance protection zones, quadrilateral characteristic ZMFCPDIS (21)....117
Measuring the operating limit of set values in cases without shaped load encroachment characteristics (OperationLdCmp=Disabled)....121
Measuring the operate time of distance protection zones....122
Completing the test....123
Pole slip protection PSPPPAM (78)....123
Verifying the settings....123
Completing the test....126
Out-of-step protection OOSPPAM....126
Verifying the settings....127
Verifying the settings by secondary injection....132
Test of point RE (R_{FwdR}, X_{FwdX})....132
The trajectory of the impedance does not enter the lens characteristic....132
The trajectory of the impedance traverses the lens characteristic in zone 2....134
Test of the boundary between zone 1 and zone 2, which is defined by the parameter *ReachZ1*....137
The trajectory of the impedance traverses the lens characteristic in zone 2....137

The trajectory of the impedance traverses the lens characteristic in zone 1....139
Test of the point SE (R_{RvsR}, X_{RvsX})....141
The trajectory of the impedance traverses the lens characteristic in zone 1....141
The trajectory of the impedance does not enter the lens characteristic....144
Loss of excitation LEXPDIS (40)....146
Verifying the settings....147
Completing the test....148
Under impedance protection for Generator ZGVPDIS....148
Verifying the settings....149
Completing the test....152
Rotor earth fault protection with RXTTE4 and general current and voltage protection CVGAPC....152
Testing....152
Completing the test....154
Current protection....154
Instantaneous phase overcurrent protection 3-phase output PHPIOC (50)....154
Measuring the operate limit of set values....154
Completing the test....155
Four step phase overcurrent protection 3-phase output OC4PTOC (51_67)....155
Verifying the settings....155
Completing the test....156
Instantaneous residual overcurrent protection EFPIOC (50N)....157
Measuring the operate limit of set values....157
Completing the test....157
Four step residual overcurrent protection, (Zero sequence or negative sequence directionality) EF4PTOC (51N/67N)....157
Four step directional ground fault protection....157
Four step non-directional ground fault protection....158
Completing the test....158
Four step negative sequence overcurrent protection NS4PTOC (46I2)....158
Completing the test....159
Sensitive directional residual overcurrent and power protection SDEPSDE (67N)....160
Measuring the operate and time limit for set values....160
Completing the test....166

Thermal overload protection, two time constants TRPTTR (49).....166
Checking operate and reset values.....166
Completing the test.....167
Breaker failure protection, phase segregated activation and output CCRBRF (50BF).....167
Checking the phase current operate value, *Pickup_PH*.....168
Checking the residual (ground fault) current operate value *Pickup_N* set below *Pickup_PH*.....168
Checking the re-trip and back-up times.....168
Verifying the re-trip mode.....169
Verifying the back-up trip mode.....169
Verifying instantaneous back-up trip at CB faulty condition.....171
Verifying the case *RetripMode* = *Contact*.....171
Verifying the function mode *Current&Contact*.....171
Completing the test.....172
Pole discrepancy protection CCPDSC (52PD).....172
Verifying the settings.....172
Completing the test.....173
Directional underpower protection GUPPDUP (37).....173
Verifying the settings.....173
Completing the test.....175
Directional overpower protection GOPPDOP (32).....175
Verifying the settings.....176
Completing the test.....176
Negative-sequence time overcurrent protection for machines NS2PTOC (46I2).....176
Verifying settings by secondary injection.....177
Completing the test.....178
Accidental energizing protection for synchronous generator AEGPVOC (50AE).....178
Verifying the settings.....179
Voltage-restrained time overcurrent protection VRPVOC(51V).....179
Verifying the settings.....179
Completing the test.....183
Generator stator overload protection GSPTTR (49S).....183
Verifying the settings.....183
Completing the test.....184
Generator rotor overload protection (49R).....184
Verifying the settings.....184
Completing the test.....185

Voltage protection.....185
Two step undervoltage protection UV2PTUV (27).....185
Verifying the settings.....185
Completing the test.....187
Two step overvoltage protection OV2PTOV (59).....187
Verifying the settings.....187
Extended testing.....188
Completing the test.....188
Two step residual overvoltage protection ROV2PTOV (59N).....188
Verifying the settings.....189
Completing the test.....189
Overexcitation protection OEXPVPH (24).....190
Verifying the settings.....190
Completing the test.....190
Voltage differential protection VDCPTOV (60).....191
Check of undervoltage levels.....191
Check of voltage differential trip and alarm levels.....193
Check of trip and trip reset timers.....195
Final adjustment of compensation for VT ratio differences 195
Completing the test.....195
100% Stator ground fault protection, 3rd harmonic based STEFPHIZ (59THD).....196
Testing.....196
Verifying settings.....197
Completing the test.....198
Frequency protection.....198
Underfrequency protection SAPTUF (81).....198
Verifying the settings.....198
Completing the test.....199
Overfrequency protection SAPTOF (81).....199
Verifying the settings.....199
Completing the test.....200
Rate-of-change frequency protection SAPFRC (81).....200
Verifying the settings.....201
Completing the test.....201
Frequency time accumulation protection function FTAQFVR (81A).....201
Verifying the settings.....201
Completing the test.....204
Multipurpose protection.....204

General current and voltage protection CVGAPC.....204
Built-in overcurrent feature (non-directional).....204
Overcurrent feature with current restraint.....205
Overcurrent feature with voltage restraint.....205
Overcurrent feature with directionality.....206
Over/Undervoltage feature.....207
Completing the test.....207
Secondary system supervision.....207
Current circuit supervision CCSSPVC (87).....207
Verifying the settings.....207
Completing the test.....208
Fuse failure supervision FUFSPVC.....208
Checking that the binary inputs and outputs operate as expected 208
Measuring the operate value for the negative sequence function 209
Measuring the operate value for the zero-sequence function 210
Measuring the operate value for the dead line detection function.....211
Checking the operation of the dv/dt and di/dt based function 211
Completing the test.....212
Fuse failure supervision 212
Completing the test.....213
Control.....213
Synchrocheck, energizing check, and synchronizing SESRSYN (25).....213
Testing the synchronizing function.....216
Testing the synchrocheck check.....216
Testing the energizing check.....219
Testing the voltage selection.....220
Completing the test.....223
Apparatus control APC.....223
Voltage control (VCTR) TR1ATCC, TR8ATCC, TCMYLTC, TCLYLTC.....224
Secondary test.....226
Check the activation of the voltage control operation.....226
Check the normal voltage regulation function.....227
Check the undervoltage block function.....228
Check the upper and lower busbar voltage limit.....228

Check the overcurrent block function....228
Single transformer....229
Parallel voltage regulation....230
Completing the test....235
Single command, 16 signals SINGLECMD....235
Interlocking....235
Logic....235
Tripping logic, common 3-phase output SMPPTRC (94)....235
Three-phase operating mode....236
1ph/3ph operating mode....236
1ph/2ph/3ph operating mode....237
Circuit breaker lockout....238
Completing the test....238
Integrator TIGAPC....238
Completing the test....239
Monitoring....239
Gas medium supervision SSIMG....239
Testing the liquid medium supervision for alarm and lock out conditions....239
Completing the test....240
Liquid medium supervision SSIML....240
Testing the liquid medium supervision for alarm and lock out conditions....240
Completing the test....240
Breaker monitoring SSCBR....241
Verifying the settings....241
Completing the test....243
Event function EVENT....243
Limit counter L4UFCNT....243
Completing the test....243
Metering....244
Pulse-counter logic PCFCNT....244
Function for energy calculation and demand handling ETPMMTR....244
Verifying the settings....244
Completing the test....245
Station communication....246
Multiple command and transmit MULTICMDRCV / MULTICMDSND....246
Remote communication....246

Binary signal transfer BinSignReceive, BinSignTransm.....246
Basic IED functions.....247
Parameter setting group handling SETGRPS.....247
Verifying the settings.....248
Completing the test.....248
Exit test mode.....248

Section 13 Checking the directionality.....249
Overview.....249
Testing the directionality of the distance protection.....249

Section 14 Commissioning and maintenance of the fault clearing system.....253
Commissioning tests.....253
Periodic maintenance tests.....253
Visual inspection.....254
Maintenance tests.....254
Preparation.....255
Recording.....255
Secondary injection.....255
Alarm test.....255
Self supervision check.....256
Trip circuit check.....256
Measurement of service currents.....257
Restoring.....257

Section 15 Troubleshooting.....259
Checking the self supervision signals.....259
Checking the self supervision function.....259
Determine the cause of an internal failure.....259
Self supervision HMI data.....259
Fault tracing.....260
Internal fault indications.....260
Using front-connected PC.....261
Repair instruction.....263
Repair support.....264
Maintenance.....264

Section 16 Glossary.....265

Section 1 Introduction

1.1 This manual

The commissioning manual contains instructions on how to commission the IED. The manual can also be used by system engineers and maintenance personnel for assistance during the testing phase. The manual provides procedures for the checking of external circuitry and energizing the IED, parameter setting and configuration as well as verifying settings by secondary injection. The manual describes the process of testing an IED in a substation which is not in service. The chapters are organized in the chronological order in which the IED should be commissioned. The relevant procedures may be followed also during the service and maintenance activities.

1.2 Intended audience

This manual addresses the personnel responsible for commissioning, maintenance and taking the IED in and out of normal service.

The commissioning personnel must have a basic knowledge of handling electronic equipment. The commissioning and maintenance personnel must be well experienced in using protection equipment, test equipment, protection functions and the configured functional logics in the IED.

1.3 Product documentation

1.3.1 Product documentation set

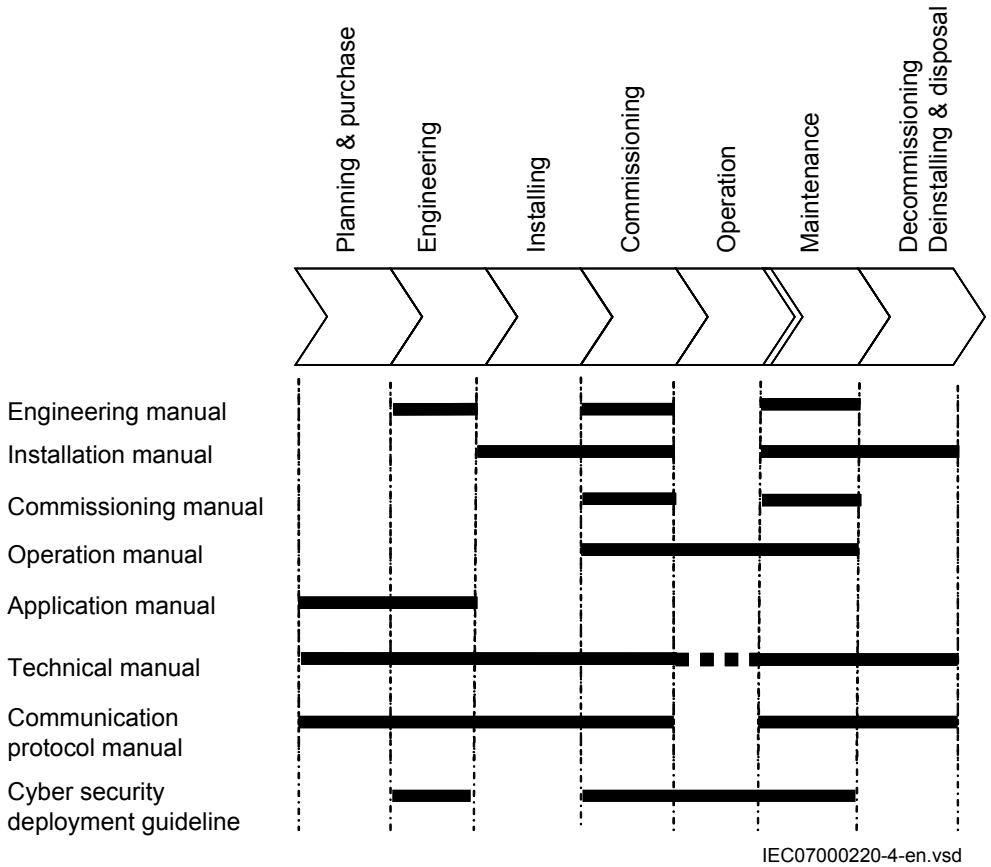

Figure 1: The intended use of manuals throughout the product lifecycle

The engineering manual contains instructions on how to engineer the IEDs using the various tools available within the PCM600 software. The manual provides instructions on how to set up a PCM600 project and insert IEDs to the project structure. The manual also recommends a sequence for the engineering of protection and control functions, LHMI functions as well as communication engineering for IEC 60870-5-103, IEC 61850 and DNP3.

The installation manual contains instructions on how to install the IED. The manual provides procedures for mechanical and electrical installation. The chapters are organized in the chronological order in which the IED should be installed.

The commissioning manual contains instructions on how to commission the IED. The manual can also be used by system engineers and maintenance personnel for assistance during the testing phase. The manual provides procedures for the checking of external circuitry and energizing the IED, parameter setting and configuration as well as verifying settings by secondary injection. The manual describes the process of testing an IED in a substation which is not in service. The chapters are organized in the chronological order in which the IED should be commissioned. The relevant procedures may be followed also during the service and maintenance activities.

The operation manual contains instructions on how to operate the IED once it has been commissioned. The manual provides instructions for the monitoring, controlling and setting of the IED. The manual also describes how to identify disturbances and how to view calculated and measured power grid data to determine the cause of a fault.

The application manual contains application descriptions and setting guidelines sorted per function. The manual can be used to find out when and for what purpose a typical protection function can be used. The manual can also provide assistance for calculating settings.

The technical manual contains application and functionality descriptions and lists function blocks, logic diagrams, input and output signals, setting parameters and technical data, sorted per function. The manual can be used as a technical reference during the engineering phase, installation and commissioning phase, and during normal service.

The communication protocol manual describes the communication protocols supported by the IED. The manual concentrates on the vendor-specific implementations.

The point list manual describes the outlook and properties of the data points specific to the IED. The manual should be used in conjunction with the corresponding communication protocol manual.

The cyber security deployment guideline describes the process for handling cyber security when communicating with the IED. Certification, Authorization with role based access control, and product engineering for cyber security related events are described and sorted by function. The guideline can be used as a technical reference during the engineering phase, installation and commissioning phase, and during normal service.

1.3.2 Document revision history

Document revision/date	History
-/May 2014	First release

1.3.3 Related documents

Documents related to REG670	Identify number
Application manual	1MRK 502 051-UUS
Commissioning manual	1MRK 502 053-UUS
Product guide	1MRK 502 054-BUS
Technical manual	1MRK 502 052-UUS
Type test certificate	1MRK 502 054-TUS

670 series manuals	Identify number
Operation manual	1MRK 500 118-UUS
Engineering manual	1MRK 511 308-UUS
Installation manual	1MRK 514 019-UUS
Communication protocol manual, DNP3	1MRK 511 301-UUS
Communication protocol manual, IEC 61850 Edition 2	1MRK 511 303-UUS
Accessories guide	1MRK 514 012-BUS
Connection and Installation components	1MRK 513 003-BEN
Test system, COMBITEST	1MRK 512 001-BEN

1.4 Document symbols and conventions

1.4.1 Symbols

The electrical warning icon indicates the presence of a hazard which could result in electrical shock.

The warning icon indicates the presence of a hazard which could result in personal injury.

The caution hot surface icon indicates important information or warning about the temperature of product surfaces.

The caution icon indicates important information or warning related to the concept discussed in the text. It might indicate the presence of a hazard which could result in corruption of software or damage to equipment or property.

The information icon alerts the reader of important facts and conditions.

The tip icon indicates advice on, for example, how to design your project or how to use a certain function.

Although warning hazards are related to personal injury, it is necessary to understand that under certain operational conditions, operation of damaged equipment may result in degraded process performance leading to personal injury or death. It is important that the user fully complies with all warning and cautionary notices.

1.4.2 Document conventions

- Abbreviations and acronyms in this manual are spelled out in the glossary. The glossary also contains definitions of important terms.
- Push button navigation in the LHMI menu structure is presented by using the push button icons.
  For example, to navigate between the options, use ↑ and ↓.
- HMI menu paths are presented in bold.
  For example, select **Main menu/Settings**.
- LHMI messages are shown in Courier font.
  For example, to save the changes in non-volatile memory, select `Yes` and press ↵.
- Parameter names are shown in italics.
  For example, the function can be enabled and disabled with the *Operation* setting.
- Each function block symbol shows the available input/output signal.
  - the character ^ in front of an input/output signal name indicates that the signal name may be customized using the PCM600 software.
  - the character * after an input/output signal name indicates that the signal must be connected to another function block in the application configuration to achieve a valid application configuration.
- Logic diagrams describe the signal logic inside the function block and are bordered by dashed lines.

- Signals in frames with a shaded area on their right hand side represent setting parameter signals that are only settable via the PST or LHMI.
- If an internal signal path cannot be drawn with a continuous line, the suffix -int is added to the signal name to indicate where the signal starts and continues.
- Signal paths that extend beyond the logic diagram and continue in another diagram have the suffix ”-cont.”

- Dimensions are provided both in inches and mm. If it is not specifically mentioned then the dimension is in mm.

1.4.3 IEC61850 edition 1 / edition 2 mapping

Table 1: IEC61850 edition 1 / edition 2 mapping

Function block name	Edition 1 logical nodes	Edition 2 logical nodes
AEGPVOC	AEGGAPC	AEGPVOC
AGSAL	SECLLN0 AGSAL	AGSAL
ALMCALH		ALMCALH
ALTIM		ALTIM
ALTMS		ALTMS
ALTRK		ALTRK
BCZSPDIF	BCZSPDIF	BCZSPDIF
BCZTPDIF	BCZTPDIF	BCZTPDIF
BDCGAPC	SWSGGIO	BDCGAPC
BRCPTOC	BRCPTOC	BRCPTOC
BTIGAPC	B16IFCVI	BTIGAPC
BUSPTRC_B1	BBSPLLN0 BUSPTRC	LLN0 BUSPTRC
BUSPTRC_B2	BUSPTRC	BUSPTRC
BUSPTRC_B3	BUSPTRC	BUSPTRC
BUSPTRC_B4	BUSPTRC	BUSPTRC
BUSPTRC_B5	BUSPTRC	BUSPTRC
BUSPTRC_B6	BUSPTRC	BUSPTRC
BUSPTRC_B7	BUSPTRC	BUSPTRC
BUSPTRC_B8	BUSPTRC	BUSPTRC
BUSPTRC_B9	BUSPTRC	BUSPTRC
BUSPTRC_B10	BUSPTRC	BUSPTRC
BUSPTRC_B11	BUSPTRC	BUSPTRC
BUSPTRC_B12	BUSPTRC	BUSPTRC
Table continues on next page		

Function block name	Edition 1 logical nodes	Edition 2 logical nodes
BUSPTRC_B13	BUSPTRC	BUSPTRC
BUSPTRC_B14	BUSPTRC	BUSPTRC
BUSPTRC_B15	BUSPTRC	BUSPTRC
BUSPTRC_B16	BUSPTRC	BUSPTRC
BUSPTRC_B17	BUSPTRC	BUSPTRC
BUSPTRC_B18	BUSPTRC	BUSPTRC
BUSPTRC_B19	BUSPTRC	BUSPTRC
BUSPTRC_B20	BUSPTRC	BUSPTRC
BUSPTRC_B21	BUSPTRC	BUSPTRC
BUSPTRC_B22	BUSPTRC	BUSPTRC
BUSPTRC_B23	BUSPTRC	BUSPTRC
BUSPTRC_B24	BUSPTRC	BUSPTRC
BUTPTRC_B1	BBTPLLN0 BUTPTRC	LLN0 BUTPTRC
BUTPTRC_B2	BUTPTRC	BUTPTRC
BUTPTRC_B3	BUTPTRC	BUTPTRC
BUTPTRC_B4	BUTPTRC	BUTPTRC
BUTPTRC_B5	BUTPTRC	BUTPTRC
BUTPTRC_B6	BUTPTRC	BUTPTRC
BUTPTRC_B7	BUTPTRC	BUTPTRC
BUTPTRC_B8	BUTPTRC	BUTPTRC
BZNSPDIF_A	BZNSPDIF	BZNSGAPC BZNSPDIF
BZNSPDIF_B	BZNSPDIF	BZNSGAPC BZNSPDIF
BZNTPDIF_A	BZNTPDIF	BZNTGAPC BZNTPDIF
BZNTPDIF_B	BZNTPDIF	BZNTGAPC BZNTPDIF
CBPGAPC	CBPLLN0 CBPMMXU CBPPTRC HOLPTOV HPH1PTOV PH3PTOC PH3PTUC RP3PDOP	LLN0 CBPPTRC HOLPTOV HPH1PTOV PH3PTOC PH3PTUC RP3PDOP
CCPDSC	CCRPLD	CCPDSC
CCRBRF	CCRBRF	CCRBRF
CCSRBRF	CCSRBRF	CCSRBRF
CCSSPVC	CCSRDIF	CCSSPVC
Table continues on next page		

Function block name	Edition 1 logical nodes	Edition 2 logical nodes
CMMXU	CMMXU	CMMXU
CMSQI	CMSQI	CMSQI
COUVGAPC	COUVLLN0 COUVPTOV COUVPTUV	LLN0 COUVPTOV COUVPTUV
CVGAPC	GF2LLN0 GF2MMXN GF2PHAR GF2PTOV GF2PTUC GF2PTUV GF2PVOC PH1PTRC	LLN0 GF2MMXN GF2PHAR GF2PTOV GF2PTUC GF2PTUV GF2PVOC PH1PTRC
CVMMXN	CVMMXN	CVMMXN
DPGAPC	DPGGIO	DPGAPC
DRPRDRE	DRPRDRE	DRPRDRE
ECPSCH	ECPSCH	ECPSCH
ECRWPSCH	ECRWPSCH	ECRWPSCH
EF4PTOC	EF4LLN0 EF4PTRC EF4RDIR GEN4PHAR PH1PTOC	LLN0 EF4PTRC EF4RDIR GEN4PHAR PH1PTOC
EFPIOC	EFPIOC	EFPIOC
ETPMMTR	ETPMMTR	ETPMMTR
FDPSPDIS	FDPSPDIS	FDPSPDIS
FMPSPDIS	FMPSPDIS	FMPSPDIS
FRPSPDIS	FPSRPDIS	FPSRPDIS
FTAQFVR	FTAQFVR	FTAQFVR
FUFSPVC	SDDRFUF	FUFSPVC
GENPDIF	GENPDIF	LLN0 GENGAPC GENPDIF GENPHAR GENPTRC
GOPPDOP	GOPPDOP	LLN0 GOPPDOP PH1PTRC
GRPTTR	GRPTTR	LLN0 GRPTTR GRPTUC
GSPTTR	GSPTTR	GSPTTR
GUPPDUP	GUPPDUP	LLN0 GUPPDUP PH1PTRC
Table continues on next page		

Function block name	Edition 1 logical nodes	Edition 2 logical nodes
HZPDIF	HZPDIF	HZPDIF
INDCALCH		INDCALH
ITBGAPC	IB16FCVB	ITBGAPC
L3CPDIF	L3CPDIF	LLN0 L3CGAPC L3CPDIF L3CPHAR L3CPTRC
L4UFCNT	L4UFCNT	L4UFCNT
L6CPDIF	L6CPDIF	LLN0 L6CGAPC L6CPDIF L6CPHAR L6CPTRC
LAPPGAPC	LAPPLLN0 LAPPPDUP LAPPPUPF	LLN0 LAPPPDUP LAPPPUPF
LCCRPTRC	LCCRPTRC	LCCRPTRC
LCNSPTOC	LCNSPTOC	LCNSPTOC
LCNSPTOV	LCNSPTOV	LCNSPTOV
LCP3PTOC	LCP3PTOC	LCP3PTOC
LCP3PTUC	LCP3PTUC	LCP3PTUC
LCPTTR	LCPTTR	LCPTTR
LCZSPTOC	LCZSPTOC	LCZSPTOC
LCZSPTOV	LCZSPTOV	LCZSPTOV
LD0LLN0	LLN0	LLN0
LDLPSCH	LDLPDIF	LDLPSCH
LDRGFC	STSGGIO	LDRGFC
LEXPDIS	LEXPDIS	LLN0 LEXPDIS LEXPTRC
LFPTTR	LFPTTR	LFPTTR
LMBRFLO	LMBRFLO	LMBRFLO
LOVPTUV	LOVPTUV	LOVPTUV
LPHD	LPHD	LPHD
LT3CPDIF	LT3CPDIF	LLN0 LT3CGAPC LT3CPDIF LT3CPHAR LT3CPTRC
Table continues on next page		

Function block name	Edition 1 logical nodes	Edition 2 logical nodes
LT6CPDIF	LT6CPDIF	LLN0 LT6CGAPC LT6CPDIF LT6CPHAR LT6CPTRC
MVGAPC	MVGGIO	MVGAPC
NS2PTOC	NS2LLN0 NS2PTOC NS2PTRC	LLN0 NS2PTOC NS2PTRC
NS4PTOC	EF4LLN0 EF4PTRC EF4RDIR GEN4PHAR PH1PTOC	LLN0 EF4PTRC EF4RDIR PH1PTOC
OC4PTOC	OC4LLN0 GEN4PHAR PH3PTOC PH3PTRC	LLN0 GEN4PHAR PH3PTOC PH3PTRC
OEXPVPH	OEXPVPH	OEXPVPH
OOSPPAM	OOSPPAM	LLN0 OOSPPAM OOSPTRC
OV2PTOV	GEN2LLN0 OV2PTOV PH1PTRC	LLN0 OV2PTOV PH1PTRC
PAPGAPC	PAPGAPC	PAPGAPC
PCFCNT	PCGGIO	PCFCNT
PH4SPTOC	OCNDLLN0 GEN4PHAR PH1BPTOC PH1PTRC	LLN0 GEN4PHAR PH1BPTOC PH1PTRC
PHPIOC	PHPIOC	PHPIOC
PRPSTATUS	RCHLCCH	RCHLCCH SCHLCCH
PSLPSCH	ZMRPSL	PSLPSCH
PSPPPAM	PSPPPAM	LLN0 PSPPPAM PSPPTRC
QCBAY	QCBAY	LLN0
QCRSV	QCRSV	QCRSV
REFPDIF	REFPDIF	REFPDIF
ROTIPHIZ	ROTIPHIZ	LLN0 ROTIPHIZ ROTIPTRC
ROV2PTOV	GEN2LLN0 PH1PTRC ROV2PTOV	LLN0 PH1PTRC ROV2PTOV

Table continues on next page

Function block name	Edition 1 logical nodes	Edition 2 logical nodes
SAPFRC	SAPFRC	SAPFRC
SAPTOF	SAPTOF	SAPTOF
SAPTUF	SAPTUF	SAPTUF
SCCVPTOC	SCCVPTOC	SCCVPTOC
SCILO	SCILO	SCILO
SCSWI	SCSWI	SCSWI
SDEPSDE	SDEPSDE	LLN0 SDEPSDE SDEPTOC SDEPTOV SDEPTRC
SESRSYN	RSY1LLN0 AUT1RSYN MAN1RSYN SYNRSYN	LLN0 AUT1RSYN MAN1RSYN SYNRSYN
SINGLELCCH		SCHLCCH
SLGAPC	SLGGIO	SLGAPC
SMBRREC	SMBRREC	SMBRREC
SMPPTRC	SMPPTRC	SMPPTRC
SP16GAPC	SP16GGIO	SP16GAPC
SPC8GAPC	SPC8GGIO	SPC8GAPC
SPGAPC	SPGGIO	SPGAPC
SSCBR	SSCBR	SSCBR
SSIMG	SSIMG	SSIMG
SSIML	SSIML	SSIML
STBPTOC	STBPTOC	STBPTOC
STEFPHIZ	STEFPHIZ	STEFPHIZ
STTIPHIZ	STTIPHIZ	STTIPHIZ
SXCBR	SXCBR	SXCBR
SXSWI	SXSWI	SXSWI
T2WPDIF	T2WPDIF	LLN0 T2WGAPC T2WPDIF T2WPHAR T2WPTRC
T3WPDIF	T3WPDIF	LLN0 T3WGAPC T3WPDIF T3WPHAR T3WPTRC
TCLYLTC	TCLYLTC	TCLYLTC
TCMYLTC	TCMYLTC	TCMYLTC
Table continues on next page		

Function block name	Edition 1 logical nodes	Edition 2 logical nodes
TEIGAPC	TEIGGIO	TEIGAPC
TMAGAPC	TMAGGIO	TMAGAPC
TR1ATCC	TR1ATCC	TR1ATCC
TR8ATCC	TR8ATCC	TR8ATCC
TRPTTR	TRPTTR	TRPTTR
UV2PTUV	GEN2LLN0 PH1PTRC UV2PTUV	LLN0 PH1PTRC UV2PTUV
VDCPTOV	VDCPTOV	VDCPTOV
VDSPVC	VDRFUF	VDSPVC
VMMXU	VMMXU	VMMXU
VMSQI	VMSQI	VMSQI
VNMMXU	VNMMXU	VNMMXU
VRPVOC	VRLLN0 PH1PTRC PH1PTUV VRPVOC	LLN0 PH1PTRC PH1PTUV VRPVOC
VSGAPC	VSGGIO	VSGAPC
WRNCALH		WRNCALH
ZC1PPSCH	ZPCPSCH	ZPCPSCH
ZC1WPSCH	ZPCWPSCH	ZPCWPSCH
ZCLCPSCH	ZCLCPLAL	LLN0 ZCLCPSCH
ZCPSCH	ZCPSCH	ZCPSCH
ZCRWPSCH	ZCRWPSCH	ZCRWPSCH
ZCVPSOF	ZCVPSOF	ZCVPSOF
ZGVPDIS	ZGVLLN0 PH1PTRC ZGVPDIS ZGVPTUV	LLN0 PH1PTRC ZGVPDIS ZGVPTUV
ZMCAPDIS	ZMCAPDIS	ZMCAPDIS
ZMCPDIS	ZMCPDIS	ZMCPDIS
ZMFCPDIS	ZMFCLLN0 PSFPDIS ZMFPDIS	LLN0 PSFPDIS ZMFPDIS
ZMFPDIS	ZMFLLN0 PSFPDIS ZMFPDIS	LLN0 PSFPDIS ZMFPDIS
ZMHPDIS	ZMHPDIS	ZMHPDIS
ZMMAPDIS	ZMMAPDIS	ZMMAPDIS
ZMMPDIS	ZMMPDIS	ZMMPDIS
Table continues on next page		

Function block name	Edition 1 logical nodes	Edition 2 logical nodes
ZMQAPDIS	ZMQAPDIS	ZMQAPDIS
ZMQPDIS	ZMQPDIS	ZMQPDIS
ZMRAPDIS	ZMRAPDIS	ZMRAPDIS
ZMRPDIS	ZMRPDIS	ZMRPDIS
ZMRPSB	ZMRPSB	ZMRPSB
ZSMGAPC	ZSMGAPC	ZSMGAPC

Section 2 Safety information

2.1 Symbols on the product

All warnings must be observed.

Read the entire manual before doing installation or any maintenance work on the product. All warnings must be observed.

Do not touch the unit in operation. The installation shall take into account the worst case temperature.

2.2 Warnings

Observe the warnings during all types of work related to the product.

Only electrically skilled persons with the proper authorization and knowledge of any safety hazards are allowed to carry out the electrical installation.

National and local electrical safety regulations must always be followed. Working in a high voltage environment requires serious approach to avoid human injuries and damage to equipment.

Do not touch circuitry during operation. Potentially lethal voltages and currents are present.

Always use suitable isolated test pins when measuring signals in open circuitry. Potentially lethal voltages and currents are present.

Never connect or disconnect a wire and/or a connector to or from a IED during normal operation. Hazardous voltages and currents are present that may be lethal. Operation may be disrupted and IED and measuring circuitry may be damaged.

Dangerous voltages can occur on the connectors, even though the auxiliary voltage has been disconnected.

Always connect the IED to protective ground, regardless of the operating conditions. This also applies to special occasions such as bench testing, demonstrations and off-site configuration. This is class 1 equipment that shall be grounded.

Never disconnect the secondary connection of current transformer circuit without short-circuiting the transformer's secondary winding. Operating a current transformer with the secondary winding open will cause a massive potential build-up that may damage the transformer and may cause injuries to humans.

Never remove any screw from a powered IED or from a IED connected to powered circuitry. Potentially lethal voltages and currents are present.

Take adequate measures to protect the eyes. Never look into the laser beam.

The IED with accessories should be mounted in a cubicle in a restricted access area within a power station, substation or industrial or retail environment.

Whenever changes are made in the IED, measures should be taken to avoid inadvertent tripping.

The IED contains components which are sensitive to electrostatic discharge. ESD precautions shall always be observed prior to touching components.

Always transport PCBs (modules) using certified conductive bags.

Do not connect live wires to the IED. Internal circuitry may be damaged

Always use a conductive wrist strap connected to protective ground when replacing modules. Electrostatic discharge (ESD) may damage the module and IED circuitry.

Take care to avoid electrical shock during installation and commissioning.

Changing the active setting group will inevitably change the IEDs operation. Be careful and check regulations before making the change.

Avoid touching the enclosure of the coupling capacitor REX061 unit and the shunt resistor REX062 unit. The surface may be hot during normal operation. The temperature can rise 50°C in REX061 and 65°C in REX062 above the ambient temperature.

2.3 Note signs

Observe the maximum allowed continuous current for the different current transformer inputs of the IED. See technical data.

Section 3 Available functions

3.1 Main protection functions

2	= number of basic instances
0-3	= option quantities
3-A03	= optional function included in packages A03 (refer to ordering details)

IEC 61850	ANSI	Function description	Generator REG670
Differential protection			
T2WPDIF	87T	Transformer differential protection, two winding	0-2
T3WPDIF	87T	Transformer differential protection, three winding	0-2
HZPDIF	87	1Ph high impedance differential protection	0-6
GENPDIF	87G	Generator differential protection	0-2
REFPDIF	87N	Restricted earth fault protection, low impedance	0-3
Impedance protection			
ZMHPDIS	21	Fullscheme distance protection, mho characteristic	0-4
ZDMRDIR	21D	Directional impedance element for mho characteristic	0-2
ZDARDIR		Additional distance protection directional function for ground faults	
ZMFPDIS	21	High speed distance protection	0–1
ZMFCPDIS	21	High speed distance protection for series compensated lines	0–1
PSPPPAM	78	Pole slip/out-of-step protection	0-1
OOSPPAM	78	Out-of-step protection	0-1
LEXPDIS	40	Loss of excitation	0-2
ROTIPHIZ	64R	Sensitive rotor ground fault protection, injection based	0-1
STTIPHIZ	64S	100% stator ground fault protection, injection based	0-1
ZGVPDIS	21	Underimpedance for generators and transformers	0–1

3.2 Back-up protection functions

IEC 61850	ANSI	Function description	Generator
			REG670
Current protection			
PHPIOC	50	Instantaneous phase overcurrent protection	0-4
OC4PTOC	51_67[1)]	Four step phase overcurrent protection	0-6
EFPIOC	50N	Instantaneous residual overcurrent protection	0-2
EF4PTOC	51N 67N[2)]	Four step residual overcurrent protection	0-6
NS4PTOC	46I2	Four step directional negative phase sequence overcurrent protection	0-2
SDEPSDE	67N	Sensitive directional residual overcurrent and power protection	0-2
TRPTTR	49	Thermal overload protection, two time constant	0-3
CCRBRF	50BF	Breaker failure protection	0-4
STBPTOC	50STB	Stub protection	
CCPDSC	52PD	Pole discordance protection	0-4
GUPPDUP	37	Directional underpower protection	0-4
GOPPDOP	32	Directional overpower protection	0-4
BRCPTOC	46	Broken conductor check	
NS2PTOC	46I2	Negative sequence time overcurrent protection for machines	0-2
AEGPVOC	50AE	Accidental energizing protection for synchronous generator	0-2
VRPVOC	51V	Voltage restrained overcurrent protection	0-3
GSPTTR	49S	Stator overload protection	0-1
GRPTTR	49R	Rotor overload protection	0–1
Voltage protection			
UV2PTUV	27	Two step undervoltage protection	0-2
OV2PTOV	59	Two step overvoltage protection	0-2
ROV2PTOV	59N	Two step residual overvoltage protection	0-3
OEXPVPH	24	Overexcitation protection	0-2
VDCPTOV	60	Voltage differential protection	0-2
STEFPHIZ	59THD	100% stator earth fault protection, 3rd harmonic based	0-1
LOVPTUV	27	Loss of voltage check	
Frequency protection			
SAPTUF	81	Underfrequency protection	0-6
SAPTOF	81	Overfrequency protection	0-6

Table continues on next page

IEC 61850	ANSI	Function description	Generator
			REG670
SAPFRC	81	Rate-of-change frequency protection	0-3
FTAQFVR	81A	Frequency time accumulation protection	0-12
Multipurpose protection			
CVGAPC		General current and voltage protection	1-12
General calculation			
SMAIHPAC		Multipurpose filter	0-6

1) 67 requires voltage
2) 67N requires voltage

3.3 Control and monitoring functions

IEC 61850	ANSI	Function description	Generator
			REG670
Control			
SESRSYN	25	Synchrocheck, energizing check and synchronizing	0-2
APC30	3	Apparatus control for up to 6 bays, max 30 apparatuses (6CBs) incl. interlocking	0-1
QCBAY		Apparatus control	1+5/APC30
LOCREM		Handling of LRswitch positions	1+5/APC30
LOCREMCTRL		LHMI control of PSTO	1+5/APC30
TCMYLTC	84	Tap changer control and supervision, 6 binary inputs	0-4
TCLYLTC	84	Tap changer control and supervision, 32 binary inputs	0-4
SLGAPC		Logic rotating switch for function selection and LHMI presentation	15
VSGAPC		Selector mini switch	20
DPGAPC		Generic communication function for Double Point indication	16
SPC8GAPC		Single point generic control 8 signals	5
AUTOBITS		AutomationBits, command function for DNP3.0	3
SINGLECMD		Single command, 16 signals	4
I103CMD		Function commands for IEC 60870-5-103	1
I103GENCMD		Function commands generic for IEC 60870-5-103	50
I103POSCMD		IED commands with position and select for IEC 60870-5-103	50
I103IEDCMD		IED commands for IEC 60870-5-103	1
I103USRCMD		Function commands user defined for IEC 60870-5-103	1
Secondary system supervision			

Table continues on next page

IEC 61850	ANSI	Function description	Generator
			REG670
CCSSPVC	87	Current circuit supervision	0-5
FUFSPVC		Fuse failure supervision	0-3
VDSPVC	60	Fuse failure supervision based on voltage difference	0-3
Logic			
SMPPTRC	94	Tripping logic	1-6
TMAGAPC		Trip matrix logic	12
ALMCALH		Logic for group alarm	5
WRNCALH		Logic for group warning	5
INDCALH		Logic for group indication	5
AND, OR, INV, PULSETIMER, GATE, TIMERSET, XOR, LLD, SRMEMORY, RSMEMORY		Configurable logic blocks	40-280
ANDQT, ORQT, INVERTERQT, XORQT, SRMEMORYQT, RSMEMORYQT, TIMERSETQT, PULSETIMERQT, INVALIDQT, INDCOMBSPQT, INDEXTSPQT		Configurable logic blocks Q/T	0–1
SLGAPC, VSGAPC, AND, OR, PULSETIMER, GATE, TIMERSET, XOR, LLD, SRMEMORY, INV		Extension logic package	0–1
FXDSIGN		Fixed signal function block	1
B16I		Boolean 16 to Integer conversion	18
BTIGAPC		Boolean 16 to Integer conversion with Logic Node representation	16
IB16		Integer to Boolean 16 conversion	18
ITBGAPC		Integer to Boolean 16 conversion with Logic Node representation	16
TIGAPC		Delay on timer with input signal integration	30
TEIGAPC		Elapsed time integrator with limit transgression and overflow supervision	12

Table continues on next page

IEC 61850	ANSI	Function description	Generator
			REG670
Monitoring			
CVMMXN, CMMXU, VMMXU, CMSQI, VMSQI, VNMMXU		Measurements	6
AISVBAS		Function block for service value presentation of secondary analog inputs	1
EVENT		Event function	20
DRPRDRE, A1RADR, A2RADR, A3RADR, A4RADR, B1RBDR, B2RBDR, B3RBDR, B4RBDR, B5RBDR, B6RBDR		Disturbance report	1
SPGAPC		Generic communication function for Single Point indication	64
SP16GAPC		Generic communication function for Single Point indication 16 inputs	16
MVGAPC		Generic communication function for Measured Value	24
BINSTATREP		Logical signal status report	3
RANGE_XP		Measured value expander block	66
SSIMG	63	Gas medium supervision	21
SSIML	71	Liquid medium supervision	3
SSCBR		Circuit breaker monitoring	0-4
I103MEAS		Measurands for IEC 60870-5-103	1
I103MEASUSR		Measurands user defined signals for IEC 60870-5-103	3
I103AR		Function status auto-recloser for IEC 60870-5-103	1
I103EF		Function status earth-fault for IEC 60870-5-103	1
I103FLTPROT		Function status fault protection for IEC 60870-5-103	1
I103IED		IED status for IEC 60870-5-103	1
I103SUPERV		Supervison status for IEC 60870-5-103	1
I103USRDEF		Status for user defiend signals for IEC 60870-5-103	20
L4UFCNT		Event counter with limit supervision	30
Metering			
PCFCNT		Pulse-counter logic	16
ETPMMTR		Function for energy calculation and demand handling	6

3.4 Communication

IEC 61850	ANSI	Function description	Generator
			REG670
Station communication			
LONSPA, SPA		SPA communication protocol	1
ADE		LON communication protocol	1
HORZCOMM		Network variables via LON	1
PROTOCOL		Operation selection between SPA and IEC 60870-5-103 for SLM	1
RS485PROT		Operation selection for RS485	1
RS485GEN		RS485	1
DNPGEN		DNP3.0 communication general protocol	1
DNPGENTCP		DNP3.0 communication general TCP protocol	1
CHSERRS485		DNP3.0 for EIA-485 communication protocol	1
CH1TCP, CH2TCP, CH3TCP, CH4TCP		DNP3.0 for TCP/IP communication protocol	1
CHSEROPT		DNP3.0 for TCP/IP and EIA-485 communication protocol	1
MST1TCP, MST2TCP, MST3TCP, MST4TCP		DNP3.0 for serial communication protocol	1
DNPFREC		DNP3.0 fault records for TCP/IP and EIA-485 communication protocol	1
IEC61850-8-1		Parameter setting function for IEC 61850	1
GOOSEINTLKRCV		Horizontal communication via GOOSE for interlocking	59
GOOSEBINRCV		Goose binary receive	16
GOOSEDPRCV		GOOSE function block to receive a double point value	64
GOOSEINTRCV		GOOSE function block to receive an integer value	32
GOOSEMVRCV		GOOSE function block to receive a measurand value	60
GOOSESPRCV		GOOSE function block to receive a single point value	64
MULTICMDRCV, MULTICMDSND		Multiple command and transmit	60/10

Table continues on next page

IEC 61850	ANSI	Function description	Generator
			REG670
FRONT, LANABI, LANAB, LANCDI, LANCD		Ethernet configuration of links	1
GATEWAY		Ethernet configuration of link one	1
OPTICAL103		IEC 60870-5-103 Optical serial communication	1
RS485103		IEC 60870-5-103 serial communication for RS485	1
AGSAL		Generic security application component	1
LD0LLN0		IEC 61850 LD0 LLN0	1
SYSLLN0		IEC 61850 SYS LLN0	1
LPHD		Physical device information	1
PCMACCS		IED Configuration Protocol	1
SECALARM		Component for mapping security events on protocols such as DNP3 and IEC103	1
FSTACCS		Field service tool access via SPA protocol over ethernet communication	1
ACTIVLOG		Activity logging parameters	1
ALTRK		Service Tracking	1
SINGLELCCH		Single ethernet port link status	1
PRPSTATUS		Dual ethernet port link status	1
PRP		IEC 62439-3 parallel redundancy protocol	0-1
Remote communication			
		Binary signal transfer receive/transmit	6/36
		Transmission of analog data from LDCM	1
		Receive binary status from remote LDCM	6/3/3

3.5 Basic IED functions

Table 2: Basic IED functions

IEC 61850 or function name	Description
INTERRSIG	Self supervision with internal event list
SELFSUPEVLST	Self supervision with internal event list
TIMESYNCHGEN	Time synchronization module

Table continues on next page

IEC 61850 or function name	Description
SYNCHBIN, SYNCHCAN, SYNCHCMPPS, SYNCHLON, SYNCHPPH, SYNCHPPS, SYNCHSNTP, SYNCHSPA, SYNCHCMPPS	Time synchronization
TIMEZONE	Time synchronization
DSTBEGIN, DSTENABLE, DSTEND	GPS time synchronization module
IRIG-B	Time synchronization
SETGRPS	Number of setting groups
ACTVGRP	Parameter setting groups
TESTMODE	Test mode functionality
CHNGLCK	Change lock function
SMBI	Signal matrix for binary inputs
SMBO	Signal matrix for binary outputs
SMMI	Signal matrix for mA inputs
SMAI1 - SMAI20	Signal matrix for analog inputs
3PHSUM	Summation block 3 phase
ATHSTAT	Authority status
ATHCHCK	Authority check
AUTHMAN	Authority management
FTPACCS	FTP access with password
SPACOMMMAP	SPA communication mapping
SPATD	Date and time via SPA protocol
DOSFRNT	Denial of service, frame rate control for front port
DOSLANAB	Denial of service, frame rate control for OEM port AB
DOSLANCD	Denial of service, frame rate control for OEM port CD
DOSSCKT	Denial of service, socket flow control
GBASVAL	Global base values for settings
PRIMVAL	Primary system values
ALTMS	Time master supervision
ALTIM	Time management
ALTRK	Service tracking
ACTIVLOG	Activity logging parameters
FSTACCS	Field service tool access via SPA protocol over ethernet communication

Table continues on next page

IEC 61850 or function name	Description
PCMACCS	IED Configuration Protocol
SECALARM	Component for mapping security events on protocols such as DNP3 and IEC103
DNPGEN	DNP3.0 communication general protocol
DNPGENTCP	DNP3.0 communication general TCP protocol
CHSEROPT	DNP3.0 for TCP/IP and EIA-485 communication protocol
MSTSER	DNP3.0 for serial communication protocol
OPTICAL103	IEC 60870-5-103 Optical serial communication
RS485103	IEC 60870-5-103 serial communication for RS485
IEC61850-8-1	Parameter setting function for IEC 61850
HORZCOMM	Network variables via LON
LONSPA	SPA communication protocol
LEDGEN	General LED indication part for LHMI

Section 4 Starting up

4.1 Factory and site acceptance testing

Testing the proper IED operation is carried out at different occasions, for example:

- Acceptance testing
- Commissioning testing
- Maintenance testing

This manual describes the workflow and the steps to carry out the commissioning testing.

Factory acceptance testing (FAT) is typically done to verify that the IED and its corresponding configuration meet the requirements of the utility or industry. This test is the most complex and in depth, as it is done to familiarize the user with a new product or to verify a new configuration. The complexity of this testing depends on several factors, such as:

- New IED type
- New configuration
- Modified configuration

Site acceptance testing (SAT or commissioning testing) is typically done to verify that the installed IED is correctly set and connected to the power system. SAT requires that the acceptance testing has been performed and that the application configuration is verified.

Maintenance testing is a periodic verification that the IED is healthy and has correct settings, depending on changes in the power system. There are also other types of maintenance testing.

4.2 Commissioning checklist

Before starting up commissioning at site, check that the following items are available.

- Single line diagram
- Protection block diagram
- Circuit diagram
- Setting list and configuration

- RJ-45 Ethernet cable (CAT 5)
- Three-phase test kit or other test equipment depending on the complexity of the configuration and functions to be tested.
- PC with PCM600 installed along with the connectivity packages corresponding to the IEDs to be tested.
- Administration rights on the PC, to set up IP addresses
- Product documentation (engineering manual, installation manual, commissioning manual, operation manual, technical manual and communication protocol manual)

4.3 Checking the power supply

Check that the auxiliary supply voltage remains within the permissible input voltage range under all operating conditions. Check that the polarity is correct before energizing the IED.

4.4 Energizing the IED

4.4.1 Checking the IED operation

Check all connections to external circuitry to ensure correct installation, before energizing the IED and carrying out the commissioning procedures.

The user could also check the software version, the IED's serial number and the installed modules and their ordering number to ensure that the IED is according to delivery and ordering specifications.

Energize the power supply of the IED to pickup. This could be done in a number of ways, from energizing a whole cubicle to energizing a single IED. The user should re-configure the IED to activate the hardware modules in order to enable the self supervision function to detect possible hardware errors. Set the IED time if no time synchronization source is configured. Check also the self-supervision function in **Main menu/Diagnostics/Monitoring** menu in local HMI to verify that the IED operates properly.

4.4.2 IED start-up sequence

When the IED is energized, the green LED starts flashing instantly. After approximately 55 seconds the window lights up and the window displays ‘IED Startup’. The main menu is displayed and the upper row should indicate ‘Available’ after about 90 seconds. A steady green light indicates a successful startup.

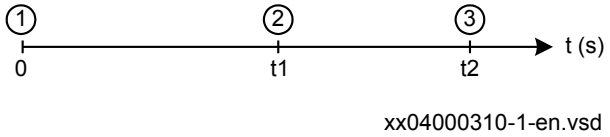

Figure 2: Typical IED start-up sequence

1 IED energized. Green LED instantly starts flashing
2 LCD lights up and "IED startup" is displayed
3 The main menu is displayed. A steady green light indicates a successful startup.

If the upper row in the window indicates ‘Fail’ instead of ‘Available’ and the green LED flashes, an internal failure in the IED has been detected. See section "Checking the self supervision function" to investigate the fault.

4.5 Energizing REX060

4.5.1 REX060 start up sequence

When the injection unit REX060 is energized, the ABB logotype is shown followed by current REX060 revision status. When the start up sequence is completed, the main menu (normal display content) is shown. The duration of the start up sequence is a few seconds.

4.6 Setting up communication between PCM600 and the IED

The communication between the IED and PCM600 is independent of the communication protocol used within the substation or to the NCC.

The communication media is always Ethernet and the used protocol is TCP/IP.

Each IED has an RJ-45 Ethernet interface connector on the front. The front Ethernet connector shall be used for communication with PCM600.

When an Ethernet-based station protocol is used, PCM600 communication can use the same Ethernet port and IP address.

To connect PCM600 to the IED, two basic variants must be considered.

- Direct point-to-point link between PCM600 and the IED front port. The front port can be seen as a service port.
- Indirect link via a station LAN or from remote via a network.

The physical connection and the IP address must be configured in both cases to enable communication.

The communication procedures are the same in both cases.

1. If needed, set the IP address for the IEDs.
2. Set up the PC or workstation for a direct link (point-to-point), or
3. Connect the PC or workstation to the LAN/WAN network.
4. Configure the IED IP addresses in the PCM600 project for each IED to match the IP addresses of the physical IEDs.

Setting up IP addresses

The IP address and the corresponding mask must be set via the LHMI for each available Ethernet interface in the IED. Each Ethernet interface has a default factory IP address when the IED is delivered. This is not given when an additional Ethernet interface is installed or an interface is replaced.

- The default IP address for the IED front port is 10.1.150.3 and the corresponding subnetwork mask is 255.255.255.0, which can be set via the local HMI path **Main menu/Configuration/Communication/Ethernet configuration/FRONT:1**.

Setting up the PC or workstation for point-to-point access to IEDs front port

A special cable is needed to connect two physical Ethernet interfaces together without a hub, router, bridge or switch in between. The Tx and Rx signal wires must be crossed in the cable to connect Tx with Rx on the other side and vice versa. These cables are known as cross over cables. The maximum length is 2 m. The connector type is RJ-45.

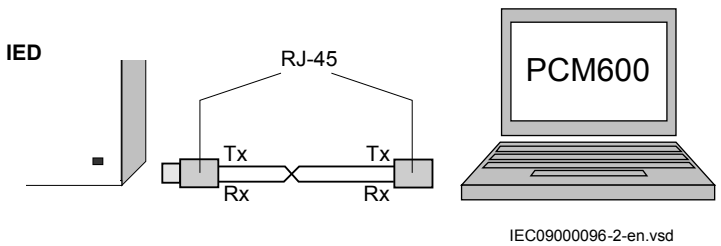

Figure 3: Point-to-point link between IED and PCM600 using a null-modem cable

The following description is an example valid for standard PCs using Microsoft Windows operating system. The example is taken from a Laptop with one Ethernet interface.

Administrator rights are required to change the PC communication setup. Some PCs have the feature to automatically detect that Tx signals from the IED are received on the Tx pin on the PC. Thus, a straight (standard) Ethernet cable can be used.

1. Select **Search programs and files** in the **Start menu** in Windows.

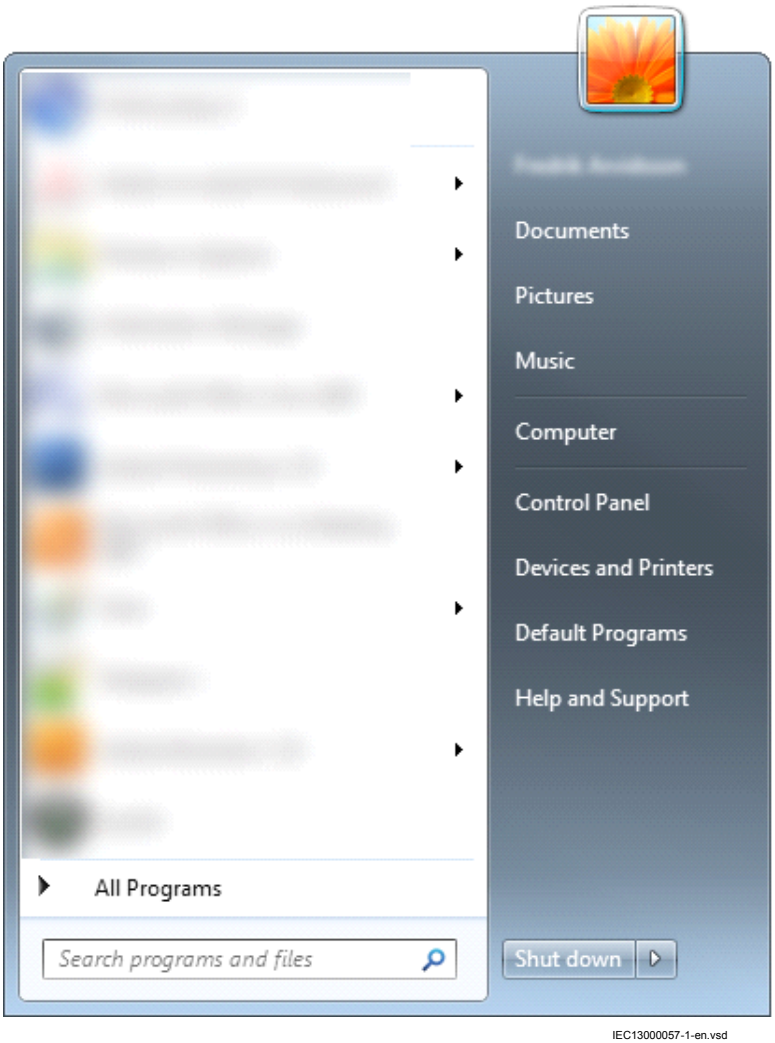

Figure 4: Select: Search programs and files

2. Type **View network connections** and click on the **View network connections** icon.

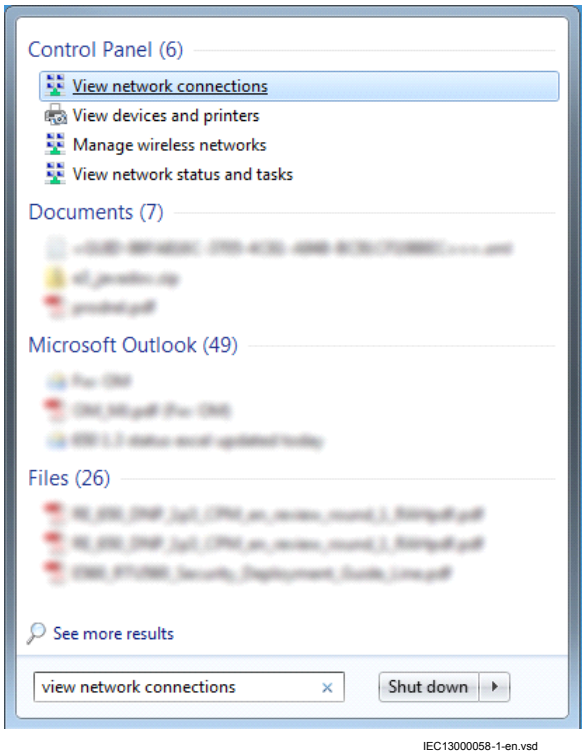

Figure 5: Click View network connections

3. Right-click and select **Properties**.

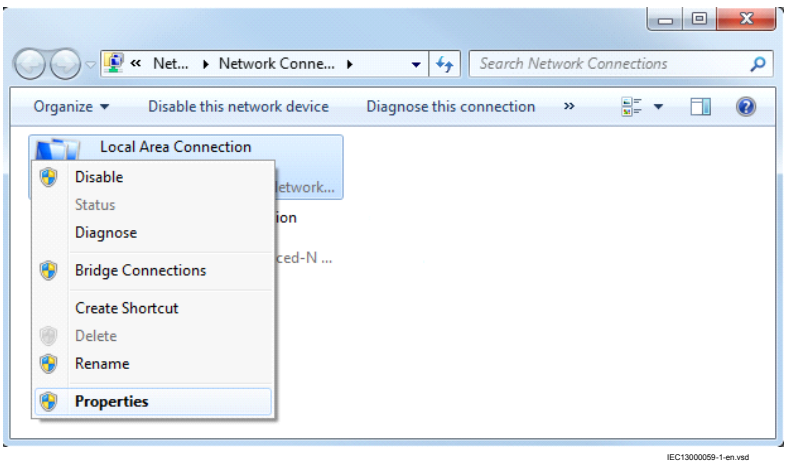

Figure 6: Right-click Local Area Connection and select Properties

4. Select the TCP/IPv4 protocol from the list of configured components using this connection and click **Properties**.

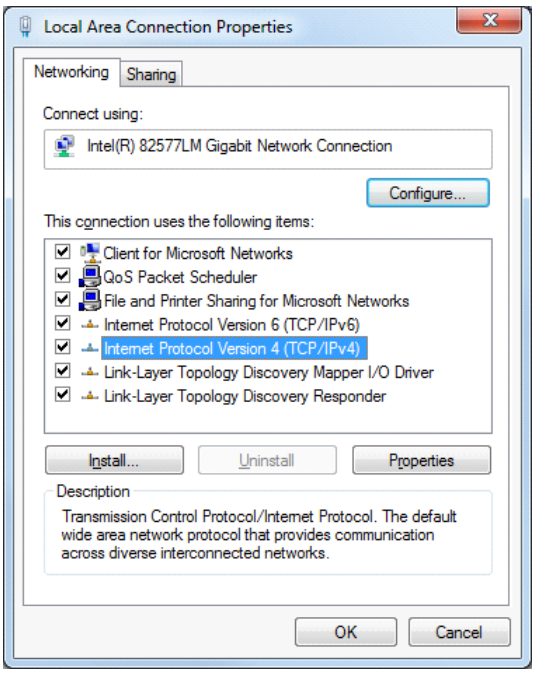

Figure 7: Select the TCP/IPv4 protocol and open Properties

5. Select **Use the following IP address** and define *IP address* and *Subnet mask* if the front port is used and if the *IP address* is not set to be obtained automatically by the IED, see Figure 8. The IP address must be different from the IP address chosen for the IED.

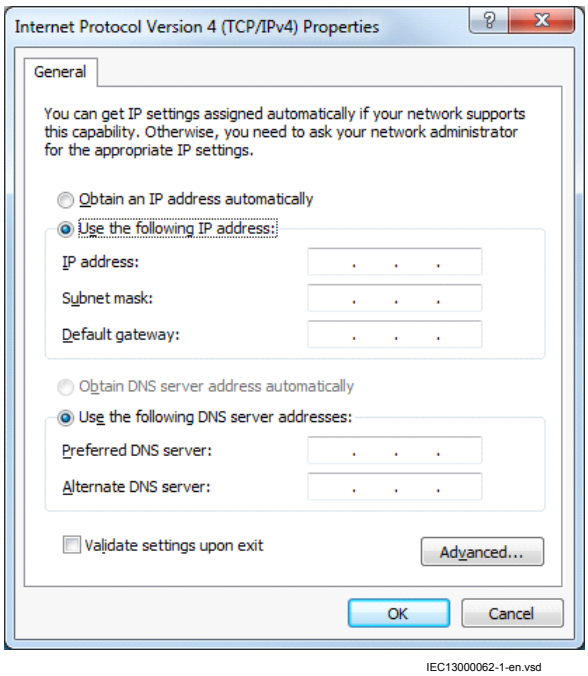

Figure 8: Select: Use the following IP address

6. Use the *ping* command to verify connectivity with the IED.
7. Close all open windows and start PCM600.

Setting up the PC to access the IED via a network

This task depends on the used LAN/WAN network.

The PC and IED must belong to the same subnetwork for this set-up to work.

4.7 Writing an application configuration to the IED

When writing a configuration to the IED with the application configuration tool, the IED is automatically set in configuration mode. When the IED is set in configuration mode, all functions are blocked. The red LED on the IED flashes, and the green LED is lit while the IED is in the configuration mode.

When the configuration is written and completed, the IED is automatically set into normal mode. For further instructions please refer to the users manuals for PCM600.

4.8 Checking CT circuits

Check that the wiring is in strict accordance with the supplied connection diagram.

The CTs must be connected in accordance with the circuit diagram provided with the IED, both with regards to phases and polarity. The following tests shall be performed on every primary CT connected to the IED:

- Primary injection test to verify the current ratio of the CT, the correct wiring up to the protection IED and correct phase sequence connection (that is A, B, C.)
- Polarity check to prove that the predicted direction of secondary current flow is correct for a given direction of primary current flow. This is an essential test for the proper operation of the differential function and directional protection functions.
- CT secondary loop resistance measurement to confirm that the current transformer secondary loop DC resistance is within the specification for the connected protection functions. When the measured loop resistance is near the calculated value for maximum DC resistance, perform a complete burden test.
- CT excitation test in order to confirm that the current transformer is of the correct accuracy rating and that there are no shorted turns in the current transformer windings. Manufacturer's design curves must be available for the current transformer to compare the actual results.
- Grounding check of the individual CT secondary circuits to verify that each three-phase set of main CTs is properly connected to the station ground and only at one electrical point.
- Insulation resistance check.

While the CT primary is energized, the secondary circuit shall never be open circuited because extremely dangerous high voltages may arise.

Both the primary and the secondary sides must be disconnected from the line and the IED when plotting the excitation characteristics.

If the CT secondary circuit ground connection is removed without the current transformer primary being de-energized, dangerous voltages may result in the secondary CT circuits.

4.9 Checking VT circuits

Check that the wiring is in strict accordance with the supplied connection diagram.

Correct possible errors before continuing to test the circuitry.

Test the circuitry.

- Polarity check when applicable; this test is often omitted for CVTs
- VT circuit voltage measurement (primary injection test)
- Grounding check
- Phase relationship
- Insulation resistance check

The primary injection test verifies the VT ratio and the wiring all the way from the primary system to the IED. Injection must be performed for each phase-to-neutral circuit.

While testing VT secondary circuit and associated secondary equipment, care shall be exercised to isolate the VT from the circuit being tested to avoid backcharging the VT from the secondary side.

4.10 Using the RTXP test switch

The RTXP test switch is designed to provide the means of safe testing of the IED. This is achieved by the electromechanical design of the test switch and test plug handle. When the test plug handle is inserted, it first blocks the trip and alarm circuits then it short circuits the CT secondary circuit and opens the VT secondary circuits making the IED available for secondary injection.

When pulled out, the test handle is mechanically stopped in half withdrawn position. In this position, the current and voltage enter the protection, but the alarm and trip circuits are still isolated and the IED is in test mode. Before removing the test handle, check the measured values in the IED.

Not until the test handle is completely removed, the trip and alarm circuits are restored for operation.

Verify that the contact sockets have been crimped correctly and that they are fully inserted by tugging on the wires. Never do this with current circuits in service.

Current circuit

1. Verify that the contacts are of current circuit type.
2. Verify that the short circuit jumpers are located in the correct slots.

Voltage circuit

1. Verify that the contacts are of voltage circuit type.
2. Check that no short circuit jumpers are located in the slots dedicated for voltage.

Trip and alarm circuits

1. Check that the correct types of contacts are used.

4.11 Checking the binary I/O circuits

4.11.1 Binary input circuits

Preferably, disconnect the binary input connector from the binary input cards. Check all connected signals so that both input level and polarity are in accordance with the IED specifications.

4.11.2 Binary output circuits

Preferably, disconnect the binary output connector from the binary output cards. Check all connected signals so that both load and polarity are in accordance with IED specifications.

4.12 Checking optical connections

Check that the Tx and Rx optical connections are correct.

An IED equipped with optical connections requires a minimum depth of 180 mm (7.2 inches) for plastic fiber cables and 275 mm (10.9

inches) for glass fiber cables. Check the allowed minimum bending radius from the optical cable manufacturer.

Section 5 Configuring the IED and changing settings

5.1 Overview

The customer specific values for each setting parameter and a configuration file have to be available before the IED can be set and configured, if the IED is not delivered with a configuration.

Use the configuration tools in PCM600 to verify that the IED has the expected configuration. A new configuration is done with the application configuration tool. The binary outputs can be selected from a signal list where the signals are grouped under their function names. It is also possible to specify a user-defined name for each input and output signal.

Each function included in the IED has several setting parameters, which have to be set in order to make the IED behave as intended. A factory default value is provided for each parameter. A setting file can be prepared using the Parameter Setting tool, which is available in PCM600.

All settings can be

- Entered manually through the local HMI.
- Written from a PC, either locally or remotely using PCM600. Front or rear port communication has to be established before the settings can be written to the IED.

It takes a minimum of three minutes for the IED to save the new settings, during this time the DC supply must not be turned off.

The IED uses a FLASH disk for storing configuration data and process data like counters, object states, Local/Remote switch position etc. Since FLASH memory is used, measures have been taken in software to make sure that the FLASH disk is not worn out by too intensive storing of data. These mechanisms make it necessary to think about a couple of issues in order to not loose configuration data, especially at commissioning time.

After the commissioning is complete, the configuration data is always stored to FLASH, so that is not an issue. But other things, like objects states and the Local/Remote switch position is stored in a slightly different way, where the save of data to FLASH is performed more and more seldom to eliminate the risk of wearing out the

FLASH disk. In worst case, the time between saves of this kind of data is around one hour.

This means, that to be absolutely sure that all data have been saved to FLASH, it is necessary to leave the IED with auxiliary power connected after all the commissioning is done (including setting the Local/Remote switch to the desired position) for at least one hour after the last commissioning action performed on the IED.

After that time has elapsed, it will be safe to turn the IED off, no data will be lost.

5.2 Configuring analog CT inputs

The analog input channels must be configured to get correct measurement results as well as correct protection functionality. Because all protection algorithms in the IED utilize the primary system quantities, it is extremely important to make sure that connected current transformer settings are done properly. These data are calculated by the system engineer and normally set by the commissioning personnel from the local HMI or from PCM600.

The analog inputs on the transformer input module are dimensioned for either 1A or 5A. Each transformer input module has a unique combination of current and voltage inputs. Make sure the input current rating is correct and that it matches the order documentation.

The primary CT data are entered via the HMI menu under **Main menu/Settings/ General Settings/Analog modules/AnalogInputs**

The following parameter shall be set for every current transformer connected to the IED:

Table 3: CT configuration

Parameter description	Parameter name	Range	Default
Rated CT primary current in A	CT Prim Input	from -10000 to +10000	0

This parameter defines the primary rated current of the CT. For two set of CTs with ratio 1000/1 and 1000/5 this parameter is set to the same value of 1000 for both CT inputs. Negative values (that is -1000) can be used in order to reverse the direction of the CT current by software for the differential function. This might be necessary if two sets of CTs have different neutral (WYE) point locations in relation to the protected busbar. It is recommended that this parameter is set to zero, for all unused CT inputs.

For main CTs with 2A rated secondary current, it is recommended to connect the secondary wiring to the 1A input.

Take the rated permissive overload values for the current inputs into consideration.

5.3 Reconfiguring the IED

I/O modules configured as logical I/O modules (BIM, BOM or IOM) are supervised.

I/O modules that are not configured are not supervised.

Each logical I/O module has an error flag that indicates signal or module failure. The error flag is also set when the physical I/O module of the correct type is not detected in the connected slot.

Section 6 Calibrating injection based sensitive rotor earth fault protection

6.1 Commissioning process

The commissioning process utilizes the commissioning tool ICT. The instructions for the process cover installation, calibration, commissioning, monitoring and auditing for the sensitive rotor earth fault ROTIPHIZ (64R) function.

6.2 Commissioning tool ICT

The sensitive rotor earth fault protection function in IED requires a number of settings. The settings *k1, k2* and the reference impedance require measurements on the generator performed by the ICT (injection commissioning tool). The factors are derived in connection to the calibration measurements during commissioning. ICT is an integrated part of the PCM600 tool.

Furthermore, ICT also assists the commissioning engineer to perform a successful installation because of its structure and validating capabilities. During installation, commissioning and calibration, ICT performs various tests to verify that the installation is acceptable and the calibration successful. Besides carrying out the actual tests, ICT also provides the commissioning engineer with tips if needed during the commissioning.

When ICT is started, rotor earth fault protection is chosen.

There are five different parts of the ICT tool to be performed at commissioning and operation:

1. Installing
2. Calibrating
3. Commissioning
4. Monitoring
5. Auditing

Before proceeding make sure that all necessary connections are in place.

Installing

When the injection is started, check that the injected voltage and current are within the permissible limits. If not, adjust the settings in the injection unit REX060. The ICT tool will check automatically for slight differences between actual injected and set injection frequency (for example, due to accuracy of the REX060 hardware). Set manually the actual frequency value measured by ICT in the IED via PST.

The high accuracy of this frequency is essential for proper operation of the protection under different operating conditions.

Calibrating

The calibration is based on three measurement steps:

1. The injection is made to the faultless generator and the measured complex impedance is stored.
2. A known resistance is connected between the generator neutral point and ground. The injection is made to the generator and the measured complex impedance is stored.
3. The generator neutral point is directly short-circuited to the ground. The injection is made to the generator and the measured complex impedance is stored.

The sequence of the commissioning calibration measurements is shown in the figure below.

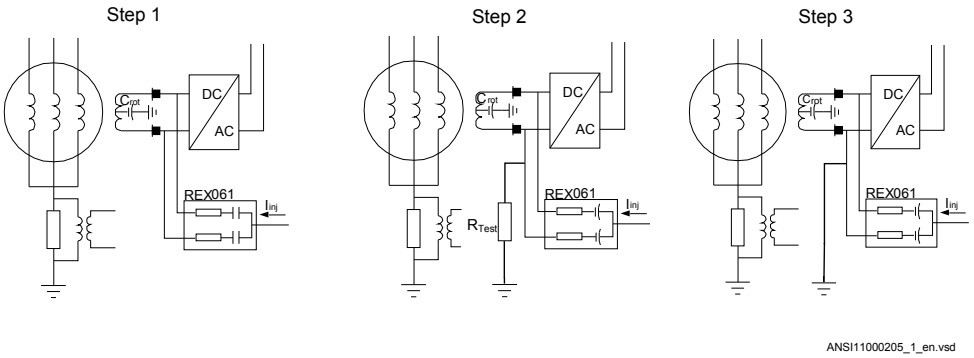

Figure 9: Different steps at calibration measurements

The sequence of the calibration session follows a scheme shown in the tool.

- Calibration sequence 1: The injection must be activated and the rotor must be left with no impedance connected. The ICT now makes consecutive measurements until the statistical error reaches an acceptable value. This is graphically shown in

a diagram. The user stops the sequence by acceptance of the measurement. The result is stored for later calculations.

- Calibration sequence 2: A known resistor is connected between the rotor winding and ground. The value of the resistance is the input to ICT. The ICT now makes consecutive measurements until the statistical error reaches an acceptable value. This is graphically shown in a diagram. The user stops the sequence by acceptance of the measurement. The result is stored for later calculations.
- Calibration sequence 3: The ICT now makes consecutive measurements until the statistical error reaches an acceptable value. This is graphically shown in a diagram. The user stops the sequence by acceptance of the measurement. The result is stored for later calculations.

After the three measurements ICT calculates the complex factors *k1* and *k2*. The reference impedance *RefR1* + j*RefX1* is also calculated. After this the values are downloaded to the parameter setting in PCM600. From PCM600 the settings are downloaded to IED.

During the three measurements described above a check is made that there are sufficient changes in the measured impedance in order to guarantee that there is no primary fault from the beginning or other problems due to the installation or calibration procedure.

Now the reference impedance is derived for one operational state. It might be necessary to make measurements to derive reference impedance for other operational cases. For information on this, see Commissioning below.

Commissioning

There is a possibility to have two different reference impedances. The need to change the reference impedance is due to different operating conditions of the machine.

In the commissioning part of ICT this can be done. For each operation state of interest a measurement is performed. If the reference impedance differs from the first one, calculated under the calibration session, the new reference impedance is stored by the command; *Submit toParameter Setting*.

If more than one reference impedance are to be used, there must be a logic configured to detect such changes in the operation states that requires a change of reference impedance.

Monitoring

In the monitoring part the calibration can be checked by applying the known fault resistance and compare it with the actual function measurement. It is also possible to identify operational states where change of reference impedance is required.

Auditing

In the auditing part calibration and commissioning reports are made.

6.3 Launching injection commissioning tool (ICT)

1. To launch the Injection commissioning tool (ICT), right-click **REG670** in the PCM plant structure and select the **Injection commissioning**.
2. In the ICT toolbar, select the **Rotor Earth Fault** function.

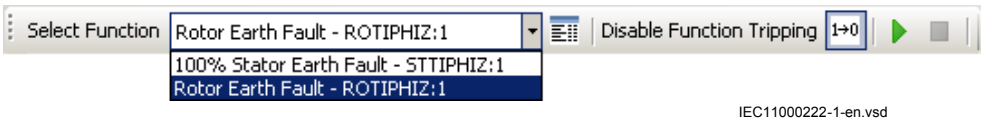

Figure 10: ICT toolbar

3. Select the **Installing** tab if it was not already selected by default after the ICT was launched.
   The first thing that needs to be ensured prior to calibration is that the measured voltage and current signal on the injected frequency is present/found, and that the amplitude of these is within the permitted limits.
4. Make sure you have not attached any additional impedance in parallel with the stator circuit.
5. Activate the injection by turning the injection switch to on position on the injection unit REX060.
6. Select the **Start reading from IED** button from the ICT toolbar to start performing continuous measurements.
7. Verify that the bars/voltage levels for both the voltage and current on the injected frequency have acceptable level.
   The bars must be green and the function status field must also indicate OK.
8. Check that the actual injected frequency is close enough to the injection frequency set on the injection unit (REX060).
   If the voltage and/or current level(s)/frequencies are not reasonable, or the ICT indicates other warnings/abnormalities in the function status field, verify that the HW connections are proper (cables etc.), and selected gains and injection frequency on the REX060 is properly selected. Then repeat steps 3 to 6. Note that the *FreqInjected* setting in Parameter setting for the specific function must correspond with the chosen injection frequency on the REX060 HMI for that function.

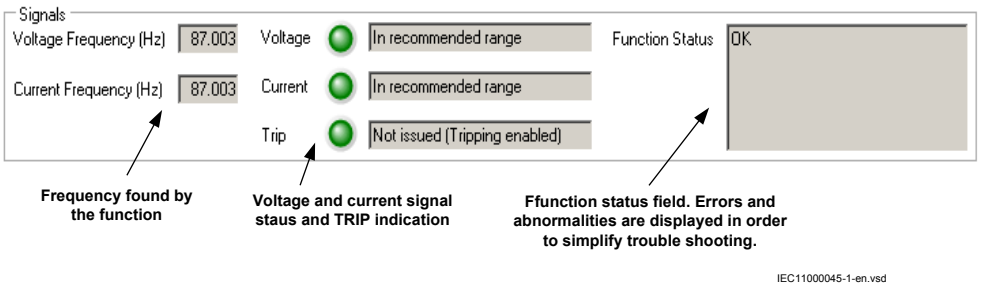

Figure 11: ICT signals and function indication panel

9. When you are ready to perform calibration, select the **Submit and save in report** button. ICT will now forward a more accurate frequency to *Parameter setting*. In *Parameter setting*, write the newly acquired parameter to IED.

6.4 Performing calibration

1. From the **Calibration** tab, select the first sub tab, i.e. **Step1: Calibration step 1**.
2. Make sure you have not attached any additional impedance in parallel with the rotor.
3. From the ICT toolbar, select the **Start reading from IED** button.
   ICT now performs continuous measurements and after the tenth measurement it starts to update the graph. Notice that the stability region indicator bar reduces in size.

   It is very important that calibration steps 1 to 3 is performed in the proper order. If not, the calibration might fail.

4. When the bar has reached the stability region (turned green), select the **Submit** button.
   ICT automatically shifts to the second calibration sub tab, **Step2: Calibration step 2**.

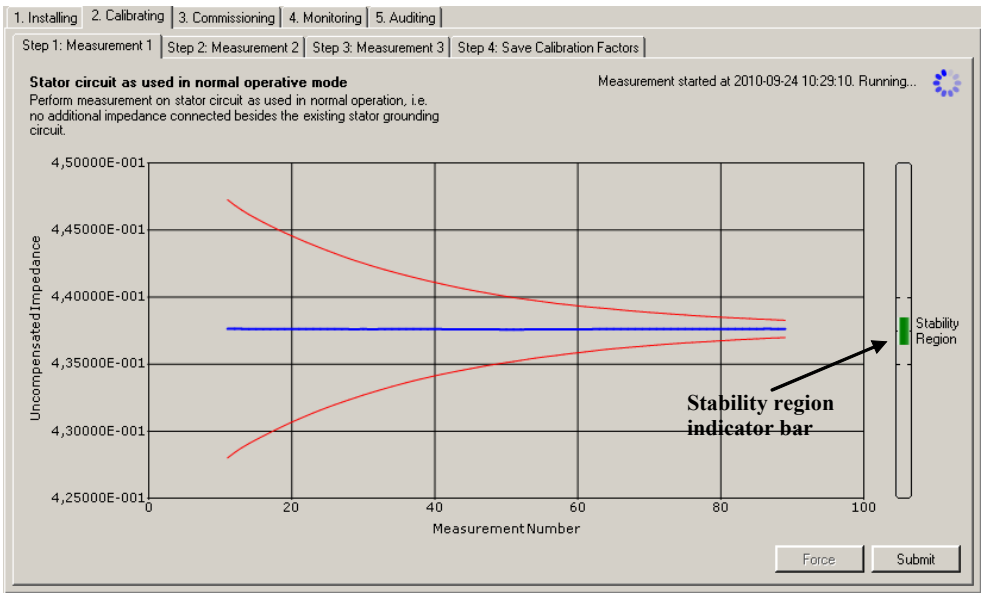

IEC11000047-1-en.vsd

Figure 12: ICT calibration tab 1 including the stability region indicator bar

5. Attach an 10kΩ known fault (10kΩ resistance to ground).
6. Type 10000 in the real part of the **Connected impedance** field and leave the imaginary part field empty.
   This informs the ICT that we have attached 10kΩ pure resistive impedance.
7. In the ICT toolbar, select the **Start reading from IED** button.
8. Once again, wait until the stability criteria is fulfilled, then select the **Submit** button.
   ICT automatically shifts to the third calibration tab, **Step3: Calibration step 3**.
9. Remove the known fault resistance attached earlier and apply a short circuit instead.
10. In the ICT toolbar, select the **Start reading from IED** button.
11. When the stability criteria are fulfilled, select the **Submit** button once again.
    ICT automatically shifts to the fourth calibration tab, **Step4: Save calibration factors**. Here the newly calculated k1, k2 and reference 1 are presented.
12. Check in the **Calibration result** field that all tests have been passed.
    12.1. If a failure is indicated during one or more check(s), follow the instructions/ tips provided by the ICT in the **Calibration result** field.
    12.2. If these tips do not solve the issue, then contact ABB Support.

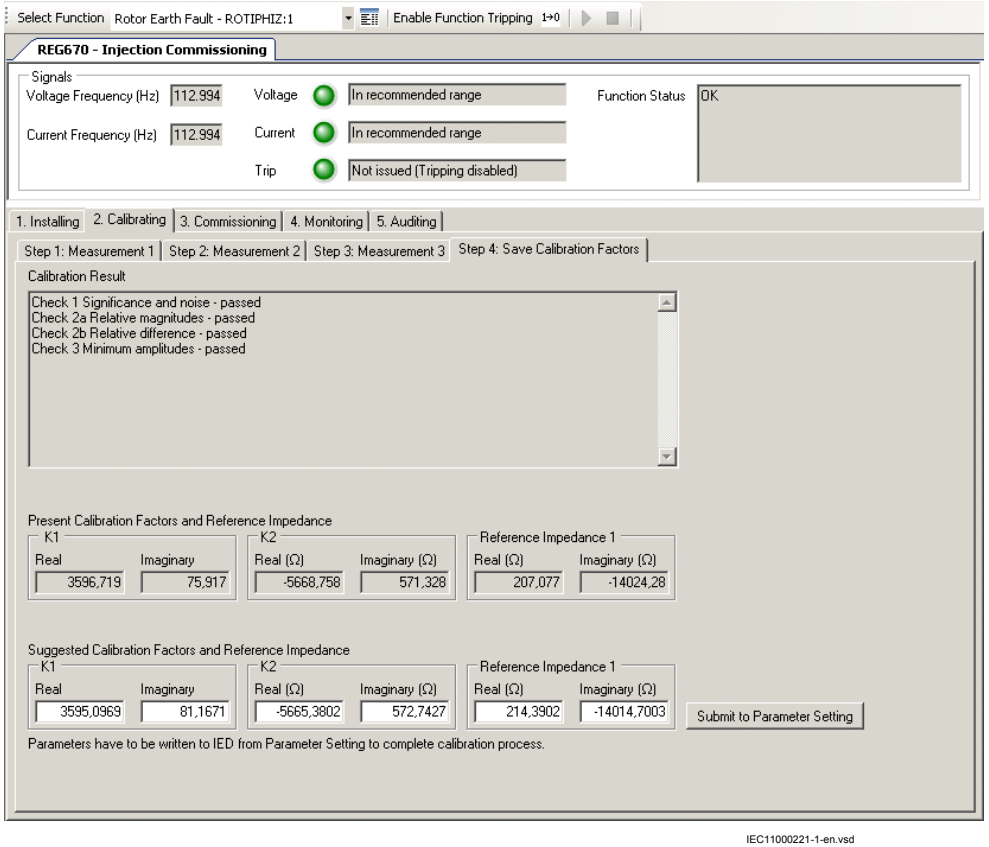

Figure 13: ICT calibration tab 4

13. Before proceeding any further make sure that you have removed the short-circuit that was applied during calibration step 3.
14. To finish the calibration process, select the **Submit to Parameter setting** button.
15. In Parameter setting, write the newly acquired parameters to IED.

6.5 Acquiring references

To detect different operation conditions of the generator and select proper impedance reference requires logic outside the injection function. Therefore changing/switching impedance reference is not described here but in a separate application note *1MRG005030 Application example for injection based 100% Stator EF and Sensitive Rotor EF protection*.

The injection commissioning tool (ICT) helps the commissioning engineer to acquire additional references for different conditions of the generator. The below description

assumes that reference 1 was set during calibration and that a second reference must be set now.

1. Ensure that the generator is in a state where the reference must be set (for example normal operation).
2. To start, select the **Commissioning** tab.
3. In the **Reference impedance selection** drop-down menu. select **Reference 2**.
4. To start reading the measurements, click the **Start reading from IED** button in the ICT toolbar.
   ICT starts to read the selected viewed quantity from IED and plots values on the X/Y graph.

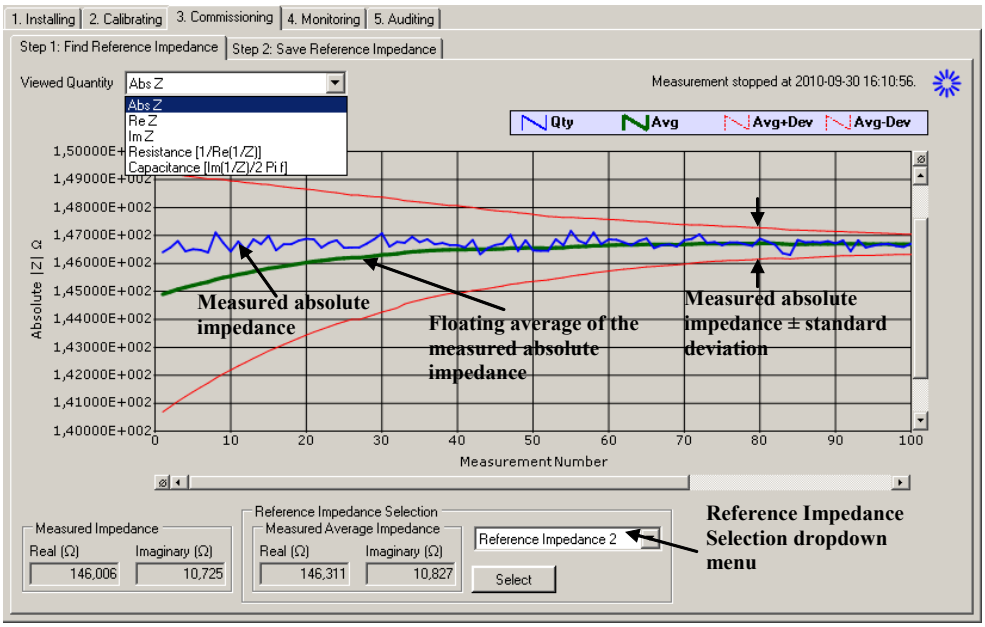

IEC11000046-1-en.vsd

Figure 14: Commissioning tab

Normally continuous readings are performed and the read absolute impedance is viewed in the plot.
By observing the standard deviation of the measured impedance, the commissioning engineer can decide if the impedance of the generator is stable/settled, and also if the average impedance is based on enough values so that statistically the signal noise is “filtered out”. This results in a fairly accurate impedance measurement which can be used as an alternative reference.

5. Click the **Select** button when the standard deviation has converged so that its magnitude is within the noise level of the measured absolute impedance.

In the second commissioning sub tab, Step2 : Save Reference Impedance, the measured real and imaginary reference 2 impedance is presented.

6. Select the **Submit to Parameter setting** button.
   This forwards the newly acquired reference to Parameter setting.
7. Write the newly acquired real and imaginary parts of Reference 2 to IED.

6.6 Verifying calibration

After the calibration is performed, it is appropriate to verify that known faults are measured as expected and that the function is indicating trips and alarms when it should, in other words that the calibration was successful. For this purpose the monitoring feature can be used.

1. In the ICT toolbar, select the fourth tab, **Monitoring**.

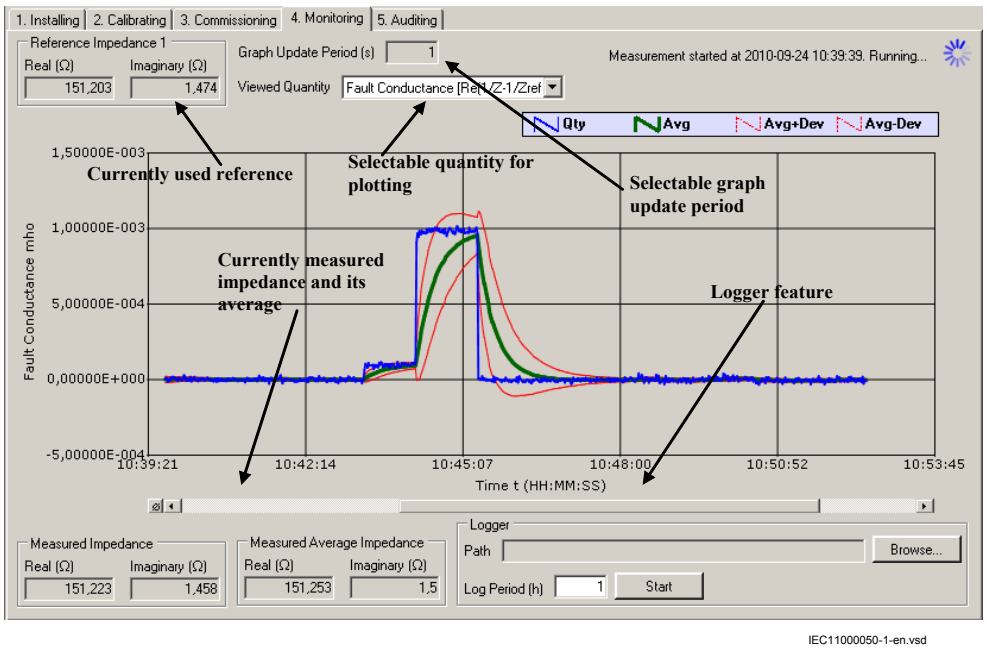

Figure 15: Monitoring tab

2. Set the graph update period to one second by typing 1 into the **Graph update period** field.
3. To start continuously plotting values on the graph with one second interval, select **Start readings from IED**.

By default the measured absolute impedance is plotted, however there are several items that can be viewed when monitoring. To see these, select the available quantities under the **Viewed quantity** drop-down menu under the **Monitoring** tab.

4. Observe the fault conductance while applying known faults.
   Both the calibration factors and the reference that is used can be verified this way. In some cases though, it is desired to be able to measure/view other quantities.
5. Select **Fault conductance** in the **Viewed quantity** drop-down menu.
   The fault conductance is equal to 1/fault resistance, and is more suitable to view when no faults or very small faults are applied/measured.
   Due to the fact that no fault theoretically equals infinite fault resistance and viewing this only plots unreliable values, it is better to view the fault conductance, which is zero in this case.
   As no fault is applied, the measured fault conductance must be close to zero. Confirm this by viewing the graph.
   It may be necessary to zoom in or out to properly view the measurements. For instructions on this, see Editing features in graph.
6. Apply for example 10kΩ fault resistance.
   6.1. Make sure that it is correctly measured.
   6.2. Try to change the **Viewed quantity** to **Fault resistance** as 10kΩ is relatively small.
   You should be able to measure approximately 10kΩ here. If you choose to view fault conductance, the measurement corresponds to approximately 1×10^{-4} Mho.
7. Apply another known fault, say 1kΩ and verify that it is measured correctly.
8. When you are completely sure that the function measures correctly, stop the measurements and remove any applied faults.
   Previously it was verified that the function measures correctly by applying known faults and observing the graph during monitoring. Besides measuring the fault size a trip indication is required when a large fault is measured to prevent that a damage to the generator occurs. To allow the specific function to issue a trip indication, it must first be enabled:
   8.1. Select the **Enable Function Tripping** button in the ICT toolbar.
   8.2. Choose **Yes** in the pop-up message.
   ICT now writes this to IED.
   8.3. By default the trip level is set to 1kΩ. In other words, if the fault resistance is lower, then the function issue trips.
9. Verify the measurements by applying various faults.
   Trip indication shall be visible in the ICT toolbar.
10. Verify that TRIP and ALARM signals are connected to tripping/alarming/signaling/communication in accordance with the scheme design.

It is very important that the Function Tripping is Enabled under the following situations:

- After completion of the calibration step
- Before leaving the ICT Tool

6.7 Auditing

During installations, calibrations and commissions the ICT generates reports for each of the steps and collects them under the Auditing tab. See the procedures below on how to view and delete reports as well as generate logs from reports.

1. To view the reports, go to the **Auditing** tab.

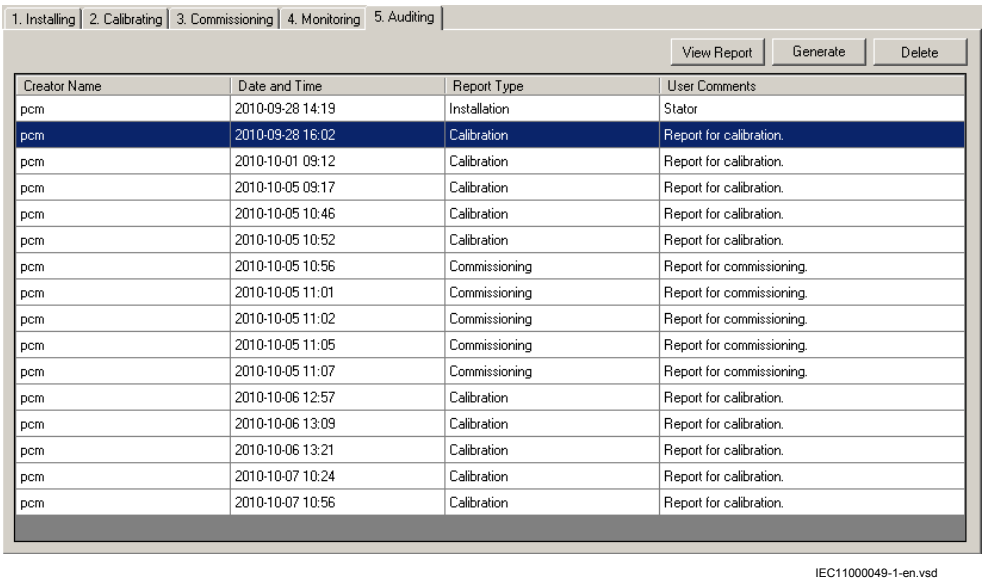

Creator Name	Date and Time	Report Type	User Comments
pcm	2010-09-28 14:19	Installation	Stator
pcm	2010-09-28 16:02	Calibration	Report for calibration.
pcm	2010-10-01 09:12	Calibration	Report for calibration.
pcm	2010-10-05 09:17	Calibration	Report for calibration.
pcm	2010-10-05 10:46	Calibration	Report for calibration.
pcm	2010-10-05 10:52	Calibration	Report for calibration.
pcm	2010-10-05 10:56	Commissioning	Report for commissioning.
pcm	2010-10-05 11:01	Commissioning	Report for commissioning.
pcm	2010-10-05 11:02	Commissioning	Report for commissioning.
pcm	2010-10-05 11:05	Commissioning	Report for commissioning.
pcm	2010-10-05 11:07	Commissioning	Report for commissioning.
pcm	2010-10-06 12:57	Calibration	Report for calibration.
pcm	2010-10-06 13:09	Calibration	Report for calibration.
pcm	2010-10-06 13:21	Calibration	Report for calibration.
pcm	2010-10-07 10:24	Calibration	Report for calibration.
pcm	2010-10-07 10:56	Calibration	Report for calibration.

Figure 16: Auditing tab

2. Open and view each report.
3. View reports in one of the following ways:
   - In the short cut menu, right click and select **View report**.
   - Click the **View report** button in the upper right corner of the auditing screen.
   - Double click a report record.
4. Delete reports in one of the following ways:

- In the short cut menu, right click and select **Delete report**.
- Click the **Delete report** button in the upper right corner of the auditing screen.
- Select a record with the mouse cursor then press the Delete key on the keyboard.

5. Generate logs in one of the following ways:
   - In the short cut menu, right click and select **Generate log**.
   - Click the **Generate log** button.

   Besides generating a report you can also generate a log file with the same information as for the report. Open and see the details of the file in Notepad or MS Excel.
   After a successful generation of the log, the system confirms with a message along with the path of the log file.

6.8 Editing features in graph

You can do the following operations on the graph during calibration, commissioning and monitoring:

- Zoom in
- Zoom out
- Cancel zoom
- Enable X-zooming
- Enable Y-zooming

1. Zoom in one of the following ways:
   - Right click a graph and select **Zoom in** or **Zoom out** in the shortcut menu.

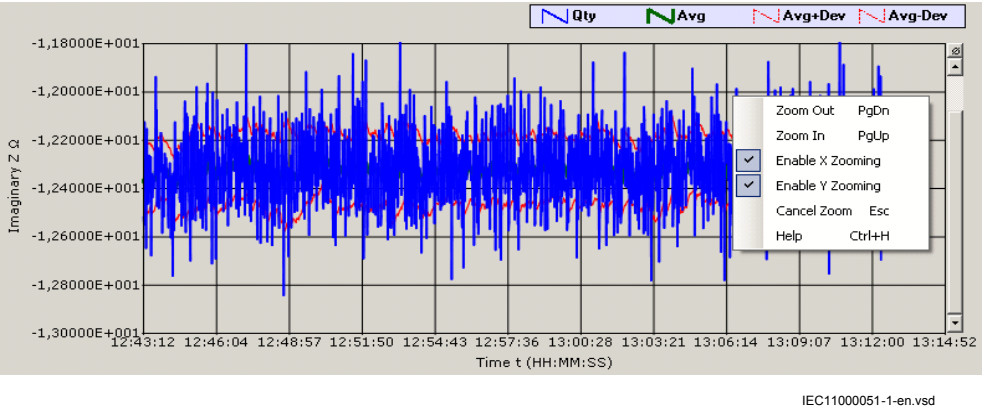

IEC11000051-1-en.vsd

Figure 17: Zooming via the shortcut menu

- Use the mouse to zoom in and select a part of the graph area.

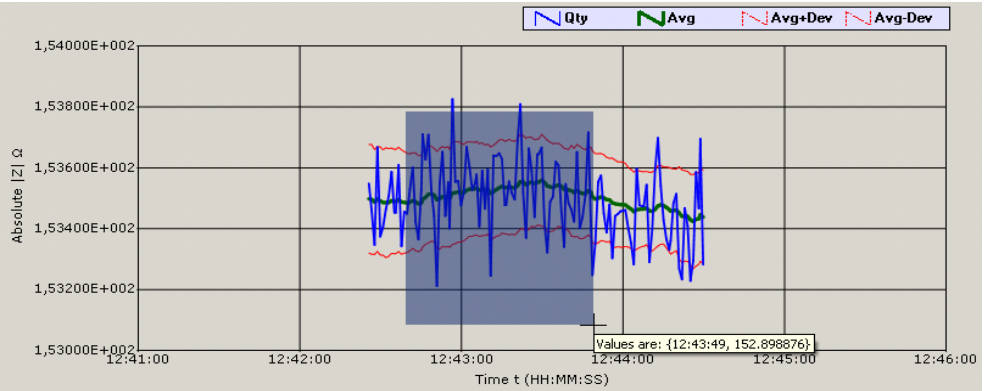

IEC11000052-1-en.vsd

Figure 18: Zooming via area selection of a part of the graph

- Press **PgUp** key on the keyboard to zoom in and **PgDn** to zoom out.

2. Cancel a zoom in the following ways:
   - Right click a graph and select **Cancel Zoom** in the shortcut menu. The graph area is squeezed to the original size.
   - Press **Esc**.
3. Enable X and Y zooming
   - To enable and disable X zooming, right click the graph and select or deselect **Enable X zooming** in the shortcut menu.
   - To enable and disable Y zooming, right click the graph and select or deselect **Enable Y zooming** in the shortcut menu.

6.9 Logging measurements to file

In addition to viewing online plotted data under the Monitoring tab, it is also possible to log quantities to a file (tabbed text file) that can be viewed in the graph. Besides this voltage levels measured by the function and also error codes are logged. This file can then be imported to other tools for deeper analysis when needed. The logger feature is available on the lower right corner of the Monitoring tab. Note that the logger is independent of graph plotting.

1. Select the **Browse** button.
   See figure Monitoring tab .
2. Navigate to a desired folder.
3. Type a suitable file name for the .txt file and select **Save**.
4. To start logging to this file, select the **Start** button.
   ICT continuously logs data to this file with logging interval set under graph update period. Notice that there is a field named Log period and its default value is 1 hour. The period can be adjusted before the logging is started, if needed.
5. The logging can be stopped by selecting the **Stop** button.
6. You can open the file in notepad or MS Excel.

Section 7 Calibrating injection based 100% stator earth fault protection

7.1 Commissioning process

The commissioning process utilizes the commissioning tool ICT. The instructions for the process cover installation, calibration, commissioning, monitoring and auditing for the 100% stator earth fault STTIPHIZ (64S) function.

7.2 Commissioning tool ICT

The 100% stator and rotor earth fault protection STTIPHIZ (64S) functions in IED require a number of settings. The settings *k1, k2* and the reference impedance require measurements on the generator performed by the ICT (injection commissioning tool). The factors are derived in connection to the calibration measurements during commissioning. The ICT tool is an integrated part of the PCM600 tool.

Furthermore, ICT also assists the commissioning engineer to perform a successful installation because of its structure and validating capabilities. During installation, commissioning and calibration, ICT performs various tests to verify that the installation is acceptable and the calibration successful. Besides carrying out the actual tests, ICT also provides the commissioning engineer with tips if such are needed during the commissioning.

When ICT is started, 100% stator earth fault protection is chosen.

There are five different parts of the ICT tool to be performed during commissioning and operation:

1. Installing
2. Calibrating
3. Commissioning
4. Monitoring
5. Auditing

Before proceeding make sure that all necessary connections are in place.

Installing

When the injection is started, check that the injected voltage and current are within the permissible limits. If not, adjust the settings of the injection unit REX060. The ICT tool will check automatically for slight differences between actual injected and set injection frequency (e.g. due to accuracy of the REX060 hardware). Set manually the actual frequency value measured by ICT in the IED via PST.Check that the selected injection frequency setting on REX060 is equal to the *FreqInjected* setting in parameter setting. Also verify that the measured injection frequency is reasonable and continue by submitting the frequency value to parameter setting, then finish by writing it to IED.

The high accuracy of this frequency is essential for proper operation of the protection under different operating conditions.

Calibrating

The calibration is based on three measurement steps.

The sequence of the calibration measurements is shown in the figure below. The connection of the fault resistance and short circuit is here shown for the case with injection in the generator neutral point via the neutral point VT. The same principle is valid for any other principles of injection; with LV neutral point resistor connected via DT or injection via open delta connected VT group on the generator terminal, etc.

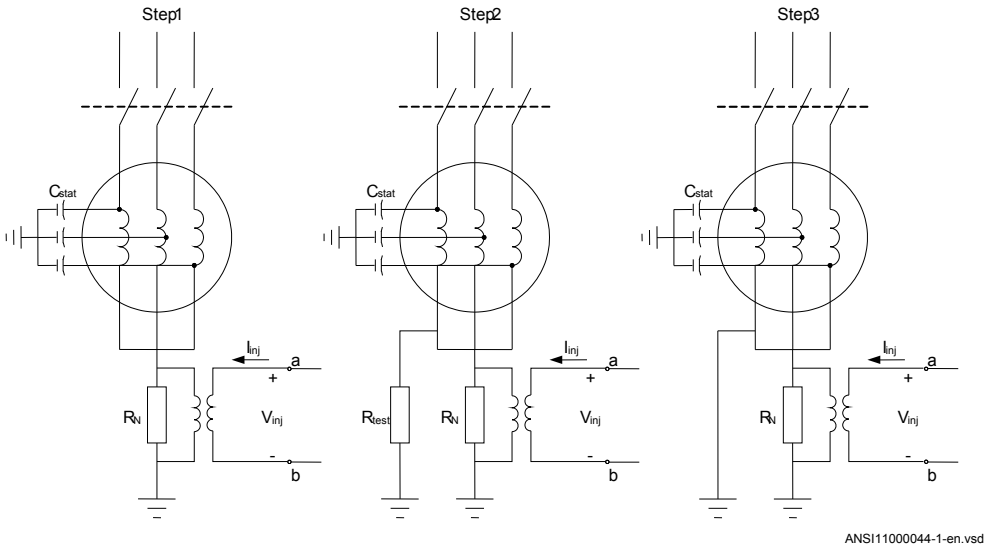

Figure 19: Different steps at calibration measurements

For other injection point alternatives the connection of the test resistance (step 2) and short circuit (step 3) are made to the same points as shown in the figure above.

The sequence of the calibration session follows a scheme shown in the tool.

- Calibration sequence 1: The injection must be activated and the stator neutral point must be left with no additional impedance connected in parallel with the neutral point resistor. ICT now makes consecutive measurements until the statistical error reaches an acceptable value. This is graphically shown in a diagram. The user stops the sequence by acceptance of the measurement. The result is stored for later calculations.
- Calibration sequence 2: A known resistor is connected to the generator neutral point in parallel with the stator neutral point resistor. The value of the resistance is input to ICT. ICT now makes consecutive measurements until the statistical error reaches an acceptable value. This is graphically shown in a diagram. The user stops the sequence by acceptance of the measurement. The result is stored for later calculations.
- Calibration sequence 3: The generator neutral point is now directly connected to the ground, that is, the neutral point resistor is short-circuited. ICT now makes consecutive measurements until the statistical error reaches an acceptable value. This is graphically shown in a diagram. The user stops the sequence by acceptance of the measurement. The result is stored for later calculations.

After the three measurements, ICT calculates the complex factors *k1* and *k2*. The reference impedance RefR1 + jRefX1 is also calculated. After this the values are downloaded to the parameter setting part of the PCM600 tool. From PCM600 the setting can be downloaded to IED.

During the three measurements described above a check is made that there are sufficient changes in the measured impedance in order to guarantee that there is no primary fault from the beginning or other problems due to the installation or calibration procedure.

Now the reference impedance is derived for one operational state. It might be necessary to make measurements to derive reference impedance for other operational cases. For information on this, see Commissioning below.

Commissioning

There is a possibility to have up to five different reference impedances. The need to change the reference impedance is that there will be different operating conditions for the generator:

- Generator stand still
- Generator running up, not synchronized to the network (circuit breaker open)
- Generator normal operation (circuit breaker closed)

It might therefore be necessary to find reference impedances for different operation states. In the commissioning part of ICT this can be done. For each operation state of interest a measurement calibration as above is performed. If the reference impedance differs from the first one, calculated under the calibration session, the new reference impedance is stored by the command; *Submit to Parameter setting*. It is possible to store up to five different reference impedances to be used at different operation states of the generator.

ICT also performs verification between the newly acquired and existing reference impedance(s) and warn the user if the resulting estimated fault difference could cause alarm or trip when one reference is shifted from another during operation.

If more than one reference impedance is to be used there must be a logic configured to detect such changes in the operation states when the reference impedance must be changed, and when a change in the function block must be initiated. The following automatic choices can for example be made:

1. Generator voltage < set value and generator circuit breaker open: Reference impedance 1
2. Generator voltage > set value and generator circuit breaker open: Reference impedance 2
3. Generator voltage > set value and generator circuit breaker closed: Reference impedance 3

For more information see separate application note *1MRG005030 Application example for injection based 100% Stator EF and Sensitive Rotor EF protection.*

Monitoring

In the monitoring part the calibration can be checked by applying the known fault resistance and compare it with the actual function measurement. It is also possible to identify operational states where change of reference impedance is required.

Auditing

In the auditing part calibration and commissioning reports are made.

7.3 Launching injection commissioning tool (ICT)

1. To launch the Injection commissioning tool (ICT), right-click **REG670** in the PCM plant structure and select the **Injection commissioning**.
2. In the ICT toolbar, select the **100% Stator Earth Fault** function.

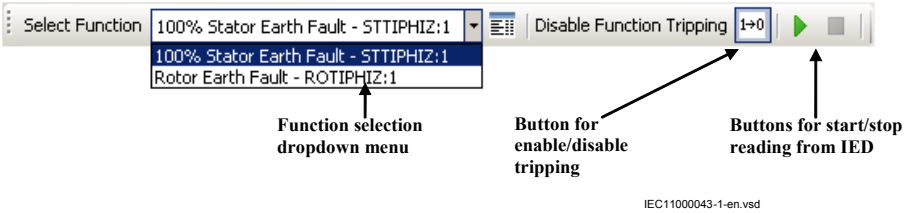

Figure 20: ICT toolbar

3. Select the **Installing** tab if it was not already selected by default after the ICT was launched.
   The first thing that needs to be ensured prior to calibration is that the measured voltage and current signal on the injected frequency is present/found, and that the amplitude of these is within the permitted limits.
4. Make sure you have not attached any additional impedance in parallel with the stator circuit.
5. Activate the injection by turning the injection switch to on position on the injection unit REX060.
6. Select the **Start reading from IED** button from the ICT toolbar to start performing continuous measurements.
7. Verify that the bars/voltage levels for both the voltage and current on the injected frequency have acceptable level.
   The bars must be green and the function status field must also indicate OK.
8. Check that the actual injected frequency is close enough to the injection frequency set on the injection unit (REX060).
   If the voltage and/or current level(s)/frequencies are not reasonable, or the ICT indicates other warnings/abnormalities in the function status field, verify that the HW connections are proper (cables etc.), and selected gains and injection frequency on the REX060 is properly selected. Then repeat steps 3 to 6. Note that the *FreqInjected* setting in Parameter setting for the specific function must correspond with the chosen injection frequency on the REX060 HMI for that function.

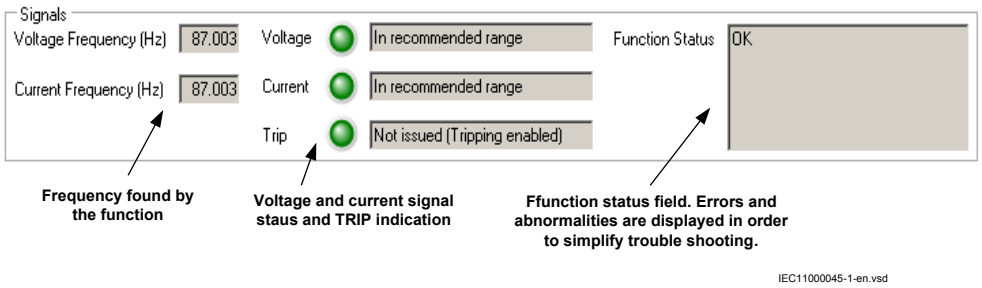

Figure 21: ICT signals and function indication panel

9. When you are ready to perform calibration, select the **Submit and save in report** button. ICT will now forward a more accurate frequency to *Parameter setting*. In *Parameter setting*, write the newly acquired parameter to IED.

7.4 Performing calibration

1. From the **Calibration** tab, select the first sub tab, i.e. **Step1: Calibration step 1**.
2. Make sure you have not attached any additional impedance in parallel with the stator.
3. From the ICT toolbar, select the **Start reading from IED** button.
   ICT now performs continuous measurements and after the tenth measurement it starts to update the graph. Notice that the stability region indicator bar reduces in size.

   It is very important that calibration steps 1 to 3 is performed in the proper order. If not, the calibration might fail.

4. When the bar has reached the stability region (turned green), select the **Submit** button.
   ICT automatically shifts to the second calibration sub tab, **Step2: Calibration step 2**.

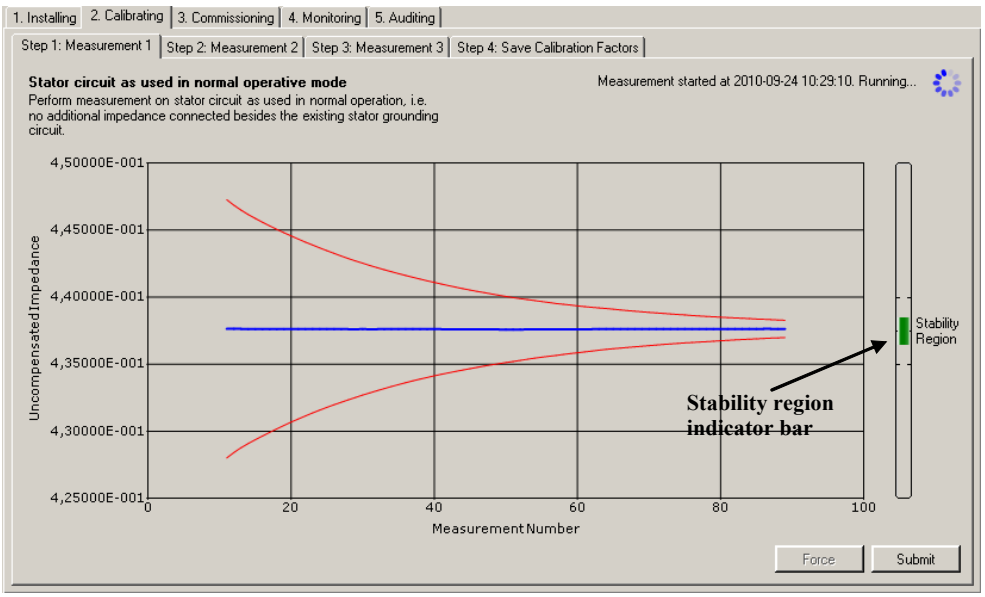

Figure 22: ICT calibration tab 1 including the stability region indicator bar

5. Attach an 10kΩ known fault (10kΩ resistance to ground).
6. Type 10000 in the real part of the **Connected impedance** field and leave the imaginary part field empty.
   This informs the ICT that we have attached 10kΩ pure resistive impedance.
7. In the ICT toolbar, select the **Start reading from IED** button.
8. Once again, wait until the stability criteria is fulfilled, then select the **Submit** button.
   ICT automatically shifts to the third calibration tab, **Step3: Calibration step 3**.
9. Remove the known fault resistance attached earlier and apply a short circuit instead.
10. In the ICT toolbar, select the **Start reading from IED** button.
11. When the stability criteria are fulfilled, select the **Submit** button once again.
    ICT automatically shifts to the fourth calibration tab, **Step4: Save calibration factors**. Here the newly calculated k1, k2 and reference 1 are presented.
12. Check in the **Calibration result** field that all tests have been passed.
    12.1. If a failure is indicated during one or more check(s), follow the instructions/ tips provided by the ICT in the **Calibration result** field.
    12.2. If these tips do not solve the issue, then contact ABB Support.

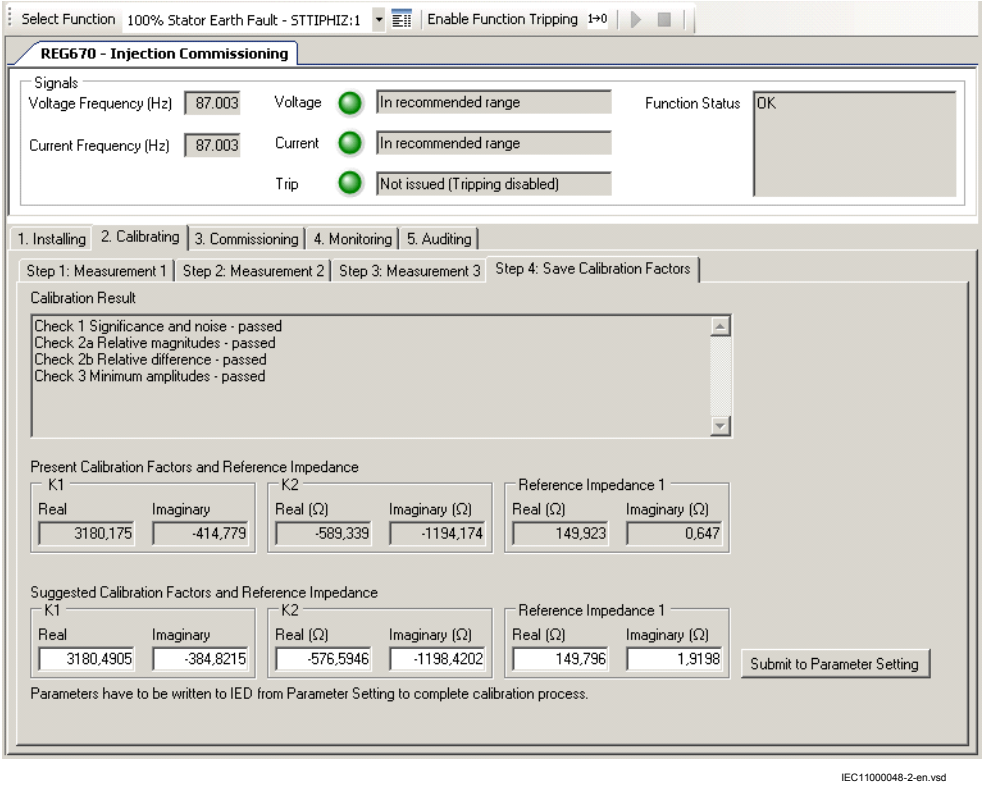

Figure 23: ICT calibration tab 4

13. Before proceeding any further make sure that you have removed the short-circuit that was applied during calibration step 3.
14. To finish the calibration process, select the **Submit to Parameter setting** button.
15. In Parameter setting, write the newly acquired parameters to IED.

7.5 Acquiring references

To detect different operation conditions of the generator and select proper impedance reference requires logic outside the injection function. Therefore changing/switching impedance reference is not described here but in a separate application note *1MRG005030 Application example for injection based 100% Stator EF and Sensitive Rotor EF protection*.

The injection commissioning tool (ICT) helps the commissioning engineer to acquire additional references for different conditions of the generator. The below description assumes that reference 1 was set during calibration and that a second reference must be set now.

1. Ensure that the generator is in a state where the reference must be set (for example normal operation).
2. To start, select the **Commissioning** tab.
3. In the **Reference impedance selection** drop-down menu. select **Reference 2**.
4. To start reading the measurements, click the **Start reading from IED** button in the ICT toolbar.
   ICT starts to read the selected viewed quantity from IED and plots values on the X/Y graph.

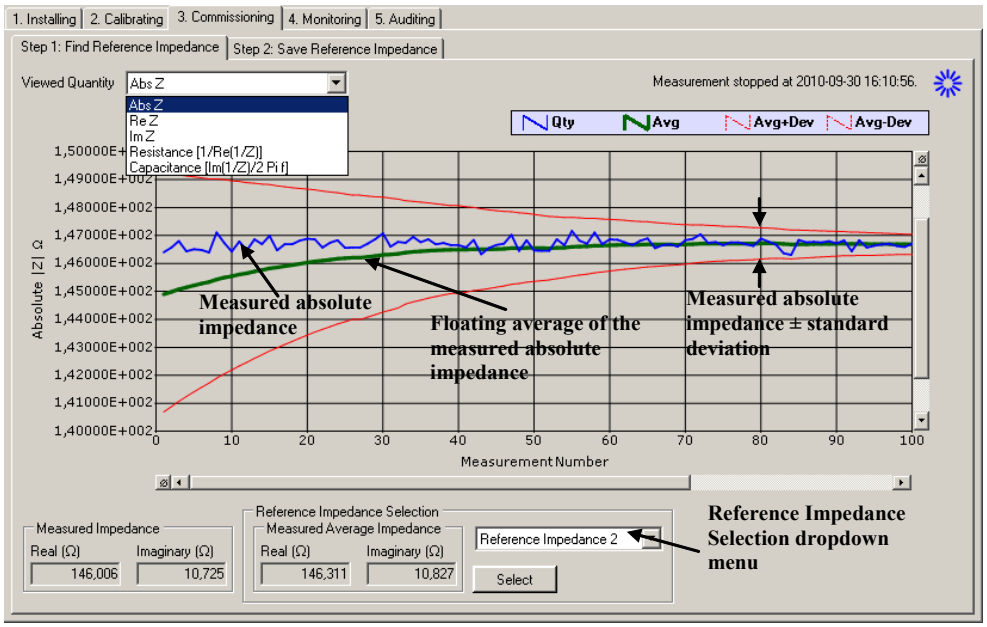

IEC11000046-1-en.vsd

Figure 24: Commissioning tab

Normally continuous readings are performed and the read absolute impedance is viewed in the plot.
By observing the standard deviation of the measured impedance, the commissioning engineer can decide if the impedance of the generator is stable/settled, and also if the average impedance is based on enough values so that statistically the signal noise is “filtered out”. This results in a fairly accurate impedance measurement which can be used as an alternative reference.

5. Click the **Select** button when the standard deviation has converged so that its magnitude is within the noise level of the measured absolute impedance.
   In the second commissioning sub tab, Step2 : Save Reference Impedance, the measured real and imaginary reference 2 impedance is presented.
6. Select the **Submit to Parameter setting** button.
   This forwards the newly acquired reference to Parameter setting.
7. Write the newly acquired real and imaginary parts of Reference 2 to IED.

7.6 Verifying calibration

After the calibration is performed, it is appropriate to verify that known faults are measured as expected and that the function is indicating trips and alarms when it should, in other words that the calibration was successful. For this purpose the monitoring feature can be used.

1. In the ICT toolbar, select the fourth tab, **Monitoring**.

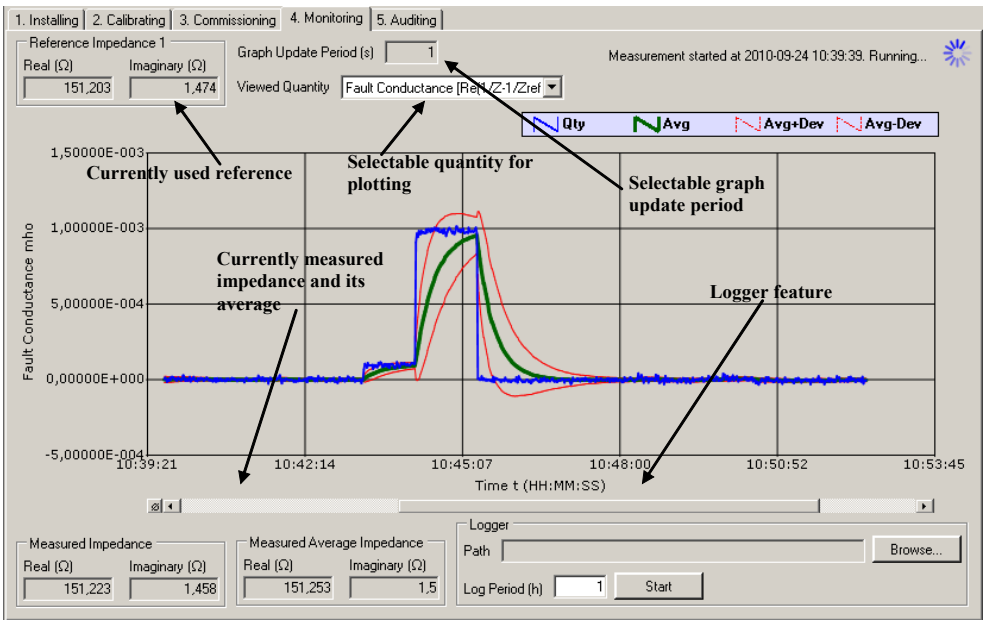

Figure 25: Monitoring tab

2. Set the graph update period to one second by typing 1 into the **Graph update period** field.
3. To start continuously plotting values on the graph with one second interval, select **Start readings from IED**.
   By default the measured absolute impedance is plotted, however there are several items that can be viewed when monitoring. To see these, select the available quantities under the **Viewed quantity** drop-down menu under the **Monitoring** tab.
4. Observe the fault conductance while applying known faults.
   Both the calibration factors and the reference that is used can be verified this way. In some cases though, it is desired to be able to measure/view other quantities.
5. Select **Fault conductance** in the **Viewed quantity** drop-down menu.
   The fault conductance is equal to 1/fault resistance, and is more suitable to view when no faults or very small faults are applied/measured.

Due to the fact that no fault theoretically equals infinite fault resistance and viewing this only plots unreliable values, it is better to view the fault conductance, which is zero in this case.
As no fault is applied, the measured fault conductance must be close to zero. Confirm this by viewing the graph.
It may be necessary to zoom in or out to properly view the measurements. For instructions on this, see Editing features in graph.

6. Apply for example 10kΩ fault resistance.
   6.1. Make sure that it is correctly measured.
   6.2. Try to change the **Viewed quantity** to **Fault resistance** as 10kΩ is relatively small.
   You should be able to measure approximately 10kΩ here. If you choose to view fault conductance, the measurement corresponds to approximately 1×10^{-4} Mho.
7. Apply another known fault, say 1kΩ and verify that it is measured correctly.
8. When you are completely sure that the function measures correctly, stop the measurements and remove any applied faults.
   Previously it was verified that the function measures correctly by applying known faults and observing the graph during monitoring. Besides measuring the fault size a trip indication is required when a large fault is measured to prevent that a damage to the generator occurs. To allow the specific function to issue a trip indication, it must first be enabled:
   8.1. Select the **Enable Function Tripping** button in the ICT toolbar.
   8.2. Choose **Yes** in the pop-up message.
   ICT now writes this to IED.
   8.3. By default the trip level is set to 1kΩ. In other words, if the fault resistance is lower, then the function issue trips.
9. Verify the measurements by applying various faults.
   Trip indication shall be visible in the ICT toolbar.
10. Verify that TRIP and ALARM signals are connected to tripping/alarming/signaling/communication in accordance with the scheme design.

It is very important that the Function Tripping is Enabled under the following situations:

- After completion of the calibration step
- Before leaving the ICT Tool

7.7 Auditing

During installations, calibrations and commissions the ICT generates reports for each of the steps and collects them under the Auditing tab. See the procedures below on how to view and delete reports as well as generate logs from reports.

1. To view the reports, go to the **Auditing** tab.

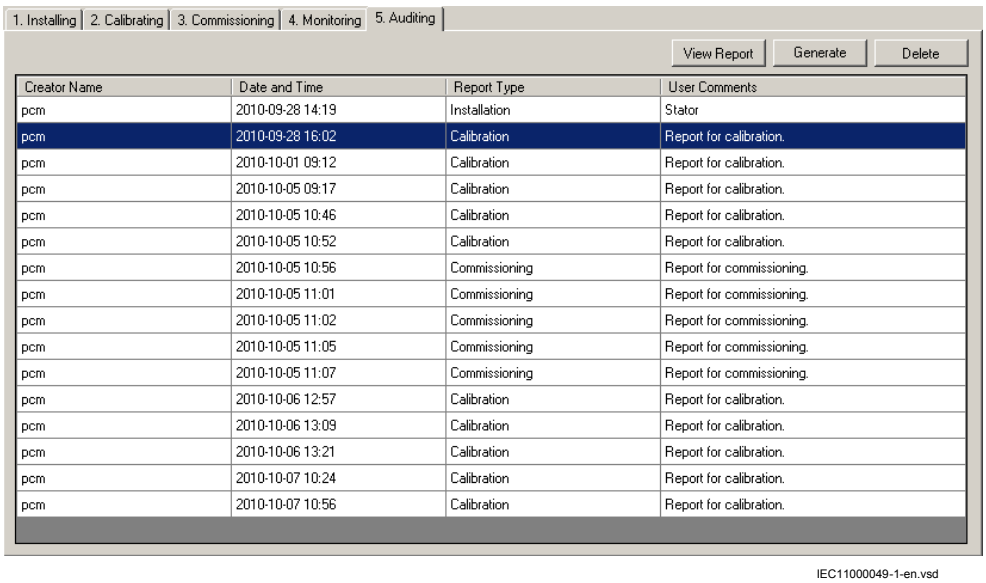

Creator Name	Date and Time	Report Type	User Comments
pcm	2010-09-28 14:19	Installation	Stator
pcm	2010-09-28 16:02	Calibration	Report for calibration.
pcm	2010-10-01 09:12	Calibration	Report for calibration.
pcm	2010-10-05 09:17	Calibration	Report for calibration.
pcm	2010-10-05 10:46	Calibration	Report for calibration.
pcm	2010-10-05 10:52	Calibration	Report for calibration.
pcm	2010-10-05 10:56	Commissioning	Report for commissioning.
pcm	2010-10-05 11:01	Commissioning	Report for commissioning.
pcm	2010-10-05 11:02	Commissioning	Report for commissioning.
pcm	2010-10-05 11:05	Commissioning	Report for commissioning.
pcm	2010-10-05 11:07	Commissioning	Report for commissioning.
pcm	2010-10-06 12:57	Calibration	Report for calibration.
pcm	2010-10-06 13:09	Calibration	Report for calibration.
pcm	2010-10-06 13:21	Calibration	Report for calibration.
pcm	2010-10-07 10:24	Calibration	Report for calibration.
pcm	2010-10-07 10:56	Calibration	Report for calibration.

Figure 26: Auditing tab

2. Open and view each report.
3. View reports in one of the following ways:
   - In the short cut menu, right click and select **View report**.
   - Click the **View report** button in the upper right corner of the auditing screen.
   - Double click a report record.
4. Delete reports in one of the following ways:
   - In the short cut menu, right click and select **Delete report**.
   - Click the **Delete report** button in the upper right corner of the auditing screen.
   - Select a record with the mouse cursor then press the Delete key on the keyboard.
5. Generate logs in one of the following ways:
   - In the short cut menu, right click and select **Generate log**.
   - Click the **Generate log** button.

Besides generating a report you can also generate a log file with the same information as for the report. Open and see the details of the file in Notepad or MS Excel.
After a successful generation of the log, the system confirms with a message along with the path of the log file.

7.8 Editing features in graph

You can do the following operations on the graph during calibration, commissioning and monitoring:

- Zoom in
- Zoom out
- Cancel zoom
- Enable X-zooming
- Enable Y-zooming

1. Zoom in one of the following ways:
   - Right click a graph and select **Zoom in** or **Zoom out** in the shortcut menu.

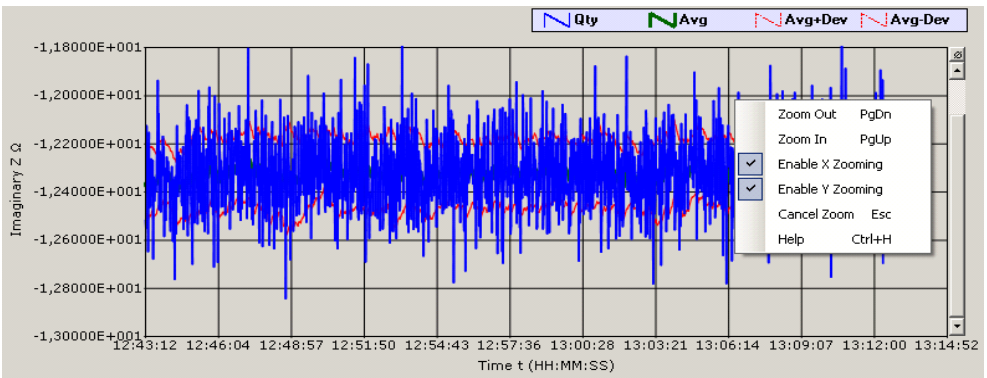

Figure 27: Zooming via the shortcut menu

   - Use the mouse to zoom in and select a part of the graph area.

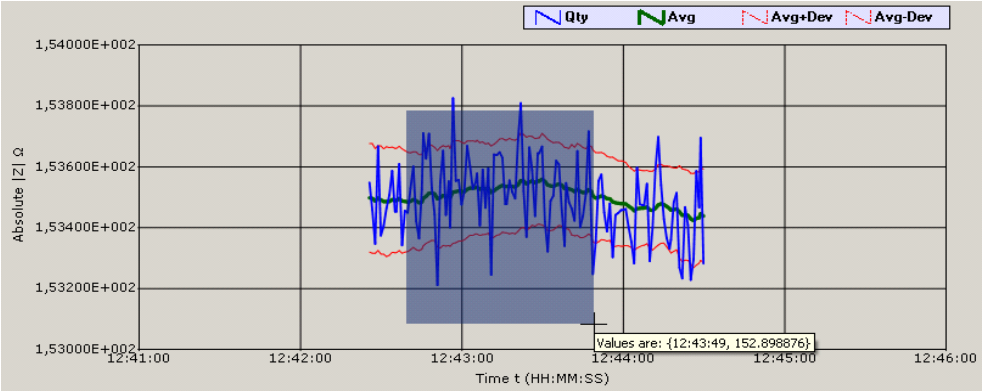

IEC11000052-1-en.vsd

Figure 28: Zooming via area selection of a part of the graph

- Press **PgUp** key on the keyboard to zoom in and **PgDn** to zoom out.

2. Cancel a zoom in the following ways:
   - Right click a graph and select **Cancel Zoom** in the shortcut menu. The graph area is squeezed to the original size.
   - Press **Esc**.
3. Enable X and Y zooming
   - To enable and disable X zooming, right click the graph and select or deselect **Enable X zooming** in the shortcut menu.
   - To enable and disable Y zooming, right click the graph and select or deselect **Enable Y zooming** in the shortcut menu.

7.9 Logging measurements to file

In addition to viewing online plotted data under the Monitoring tab, it is also possible to log quantities to a file (tabbed text file) that can be viewed in the graph. Besides this voltage levels measured by the function and also error codes are logged. This file can then be imported to other tools for deeper analysis when needed. The logger feature is available on the lower right corner of the Monitoring tab. Note that the logger is independent of graph plotting.

1. Select the **Browse** button.
   See figure Monitoring tab .
2. Navigate to a desired folder.
3. Type a suitable file name for the .txt file and select **Save**.
4. To start logging to this file, select the **Start** button.

ICT continuously logs data to this file with logging interval set under graph update period. Notice that there is a field named Log period and its default value is 1 hour. The period can be adjusted before the logging is started, if needed.

5. The logging can be stopped by selecting the **Stop** button.
6. You can open the file in notepad or MS Excel.

Section 8 Establishing connection and verifying the SPA/IEC communication

8.1 Entering settings

If the IED is connected to a monitoring or control system via the rear SPA/IEC port, the SPA/IEC port has to be set either for SPA or IEC use.

8.1.1 Entering SPA settings

The SPA/IEC port is located on the rear side of the IED. Two types of interfaces can be used:

- for plastic fibres with connector type HFBR
- for glass fibres with connectors type ST

When using the SPA protocol, the rear SPA/IEC port must be set for SPA use.

Procedure

1. Set the operation of the rear optical SPA/IEC port to “SPA”.
   The operation of the rear SPA port can be found on the local HMI under **Main menu/Configuration/Communication/Station communication/Port configuration/SLM optical serial port/PROTOCOL:1**
   When the setting is entered the IED restarts automatically. After the restart the SPA/IEC port operates as a SPA port.
2. Set the slave number and baud rate for the rear SPA port
   The slave number and baud rate can be found on the local HMI under **Main menu/Configuration/Communication/Station communication/SPA/SPA:1**
   Set the same slave number and baud rate as set in the SMS system for the IED.

8.1.2 Entering IEC settings

When using the IEC protocol, the rear SPA/IEC port must be set for IEC use.

Two types of interfaces can be used:

- for plastic fibres with connector type HFBR
- for glass fibres with connectors type ST

Procedure

1. Set the operation of the rear SPA/IEC port to “IEC”.
   The operation of the rear SPA/IEC port can be found on the local HMI under **Main menu/Configuration/Communication/SLM configuration/Rear optical SPA-IEC-DNP port/PROTOCOL:1**
   When the setting is entered the IED restarts automatically. After the restart the selected IEC port operates as an IEC port.
2. Set the slave number and baud rate for the rear IEC port.
   The slave number and baud rate can be found on the local HMI under **Main menu/Configuration/Communication/SLM configuration/Rear optical SPA-IEC-DNP port/IEC60870–5–103**
   Set the same slave number and baud rate as set in the IEC master system for the IED.

8.2 Verifying the communication

To verify that the rear communication with the SMS/SCS system is working, there are some different methods. Choose one of the following.

8.2.1 Verifying SPA communication

Procedure

1. Use a SPA-emulator and send “RF” to the IED. The answer from the IED should be the type and version of it, for example, “”.
2. Generate one binary event by activating a function, which is configured to an event block where the used input is set to generate events on SPA. The configuration must be made with the PCM600 software. Verify that the event is presented in the SMS/SCS system.

During the following tests of the different functions in the IED, verify that the events and indications in the SMS/SCS system are as expected.

8.2.2 Verifying IEC communication

To verify that the IEC communication with the IEC master system is working, there are some different methods. Choose one of the following.

Procedure

1. Check that the master system time-out for response from the IED, for example after a setting change, is > 40 seconds.
2. Use a protocol analyzer and record the communication between the IED and the IEC master. Check in the protocol analyzer's log that the IED answers the master messages.
3. Generate one binary event by activating a function that is configured to an event block where the used input is set to generate events on IEC. The configuration must be made with the PCM600 software. Verify that the event is presented in the IEC master system.

During the following tests of the different functions in the IED, verify that the events and indications in the IEC master system are as expected.

8.3 Fibre optic loop

The SPA communication is mainly used for SMS. It can include different numerical IEDs with remote communication possibilities. The fibre optic loop can contain < 20-30 IEDs depending on requirements on response time. Connection to a personal computer (PC) can be made directly (if the PC is located in the substation) or by telephone modem through a telephone network with ITU (CCITT) characteristics.

Table 4: Max distances between IEDs/nodes

glass	< 1000 m according to optical budget
plastic	< 25 m (inside cubicle) according to optical budget

8.4 Optical budget calculation for serial communication with SPA/IEC

Table 5: Example

	Distance 1 km Glass	Distance 25 m Plastic
Maximum attenuation	- 11 dB	- 7 dB
4 dB/km multi mode: 820 nm - 62.5/125 um	4 dB	-
0.16 dB/m plastic: 620 nm - 1mm	-	4 dB
Margins for installation, aging, and so on	5 dB	1 dB
Losses in connection box, two contacts (0.5 dB/contact)	1 dB	-
Losses in connection box, two contacts (1 dB/contact)	-	2 dB
Margin for 2 repair splices (0.5 dB/splice)	1 dB	-
Maximum total attenuation	11 dB	7 dB

Section 9 Establishing connection and verifying the LON communication

9.1 Communication via the rear ports

9.1.1 LON communication

LON communication is normally used in substation automation systems. Optical fiber is used within the substation as the physical communication link.

The test can only be carried out when the whole communication system is installed. Thus, the test is a system test and is not dealt with here.

The communication protocol Local Optical Network (LON) is available for 670 IED series.

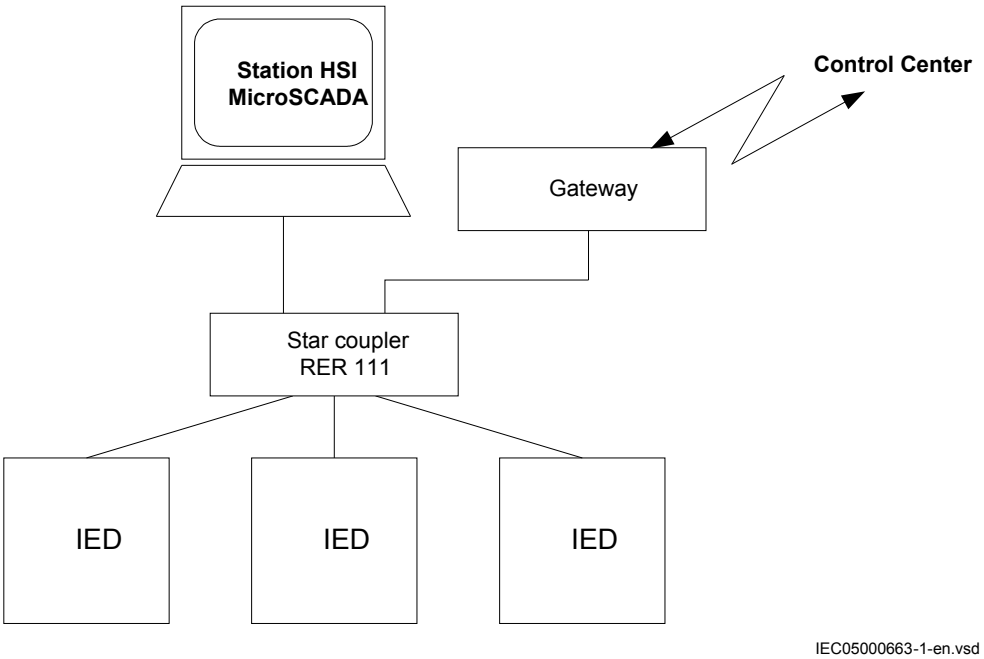

Figure 29: Example of LON communication structure for a substation automation system

An optical network can be used within the substation automation system. This enables communication with the IEDs in the 670 series through the LON bus from the operator's workplace, from the control center and also from other IEDs via bay-to-bay horizontal communication.

The fibre optic LON bus is implemented using either glass core or plastic core fibre optic cables.

Table 6: Specification of the fibre optic connectors

	Glass fibre	Plastic fibre
Cable connector	ST-connector	snap-in connector
Cable diameter	62.5/125 m	1 mm
Max. cable length	1000 m	10 m
Wavelength	820-900 nm	660 nm
Transmitted power	-13 dBm (HFBR-1414)	-13 dBm (HFBR-1521)
Receiver sensitivity	-24 dBm (HFBR-2412)	-20 dBm (HFBR-2521)

9.2.1 The LON Protocol

The LON protocol is specified in the LonTalkProtocol Specification Version 3 from Echelon Corporation. This protocol is designed for communication in control networks and is a peer-to-peer protocol where all the devices connected to the network can communicate with each other directly. For more information of the bay-to-bay communication, refer to the section Multiple command function.

9.2.2 Hardware and software modules

The hardware needed for applying LON communication depends on the application, but one very central unit needed is the LON Star Coupler and optical fibres connecting the star coupler to the IEDs. To interface the IEDs from MicroSCADA, the application library LIB670 is required.

The HV Control 670 software module is included in the LIB520 high-voltage process package, which is a part of the Application Software Library within MicroSCADA applications.

The HV Control 670 software module is used for control functions in IEDs in the 670 series. This module contains the process picture, dialogues and a tool to generate the process database for the control application in MicroSCADA.

Use the LON Network Tool (LNT) to set the LON communication. This is a software tool applied as one node on the LON bus. To communicate via LON, the IEDs need to know

- The node addresses of the other connected IEDs.
- The network variable selectors to be used.

This is organized by LNT.

The node address is transferred to LNT via the local HMI by setting the parameter *ServicePinMsg* = *Yes*. The node address is sent to LNT via the LON bus, or LNT can scan the network for new nodes.

The communication speed of the LON bus is set to the default of 1.25 Mbit/s. This can be changed by LNT.

The setting parameters for the LON communication are set via the local HMI. Refer to the technical manual for setting parameters specifications.

The path to LON settings in the local HMI is **Main menu/Configuration/ Communication/SLM configuration/Rear optical LON port**

If the LON communication from the IED stops, caused by setting of illegal communication parameters (outside the setting range) or by another disturbance, it is possible to reset the LON port of the IED.

Path in the local HMI under **Main menu/Configuration/Communication/SLM configuration/Rear optical LON port**

These parameters can only be set with the LON Network Tool (LNT).

Table 7: Setting parameters for the LON communication

Parameter	Range	Default	Unit	Parameter description
DomainID	0	0	-	Domain identification number
SubnetID*	0 - 255 Step: 1	0	-	Subnet identification number
NodeID*	0 - 127 Step: 1	0	-	Node identification number
*Can be viewed in the local HMI				

Path in the local HMI under **Main menu/Congifuration/Communication/SLM configuration/Rear optical LON port**

These parameters can only be set with the LON Network Tool (LNT).

Table 8: LON node information parameters

Parameter	Range	Default	Unit	Parameter description
NeuronID*	0 - 12	Not loaded	-	Neuron hardware identification number in hexadecimal code
Location	0 - 6	No value	-	Location of the node
*Can be viewed in the local HMI				

Path in the local HMI under **Main menu/Configuration/Communication/SLM configuration/Rear optical LON port**

Table 9: ADE Non group settings (basic)

Name	Values (Range)	Unit	Step	Default	Description
Operation	Disabled Enabled	-	-	Disabled	Operation
TimerClass	Slow Normal Fast	-	-	Slow	Timer class

Path in the local HMI under **Main menu/Configuration/Communication/SLM configuration/Rear optical LON port**

Table 10: LON commands

Command	Command description
ServicePinMsg	Command with confirmation. Transfers the node address to the LON Network Tool.

9.2 Optical budget calculation for serial communication with LON

Table 11: Example

	Distance 1 km Glass	Distance10 m Plastic
Maximum attenuation	-11 dB	- 7 dB
4 dB/km multi mode: 820 nm - 62.5/125 um	4 dB	-
0.3 dB/m plastic: 620 nm - 1mm	-	3 dB
Margins for installation, aging, and so on	5 dB	2 dB
Losses in connection box, two contacts (0.75 dB/contact)	1.5 dB	-
Table continues on next page		

	Distance 1 km Glass	Distance10 m Plastic
Losses in connection box, two contacts (1dB/contact)	-	2 dB
Margin for repair splices (0.5 dB/splice)	0.5 dB	-
Maximum total attenuation	11 dB	7 dB

Section 10 Establishing connection and verifying the IEC 61850 communication

10.1 Overview

The rear OEM ports are used for substation bus (IEC 61850-8-1) communication.

For IEC 61850-8-1 redundant communication, both rear OEM ports are utilized. In this case IEC 61850-9-2LE communication can not be used.

IEC 61850-9-2LE process bus communication is not supported in the IED.

10.2 Setting the station communication

To enable IEC 61850 communication the corresponding OEM ports must be activated. The rear OEM port AB and CD is used for IEC 61850-8-1 communication. For IEC 61850-8-1 redundant communication, both OEM port AB and CD are used exclusively.

To enable IEC 61850 station communication:

1. Enable IEC 61850-8-1 (substation bus) communication for port AB.
   1.1. Set values for the rear ports AB and CD.
   Navigate to: **Main menu/Configuration/Communication/Ethernet configuration/LANAB:1**
   Set values for *Mode*, *IPAddress* and *IPMask*. *Mode* must be set to *Normal*.
   Check that the correct IP address is assigned to the port.
   1.2. Enable IEC 61850-8-1 communication.
   Navigate to: **Main menu/Configuration/Communication/Station communication/IEC61850-8-1/IEC61850–8–1:1**
   Set *Operation* to *Enabled* and *PortSelGOOSE* to the port used (for example *LANAB*).
2. Enable redundant IEC 61850-8-1 communication for port AB and CD
   2.1. Enable redundant communication.

Navigate to: **Main menu/Configuration/Communication/Ethernet configuration/PRP:1**
Set values for *Operation*, *IPAddress* and *IPMask*. *Operation* must be set to *Enabled*.
The IED will restart after confirmation. Menu items **LANAB:1** and **LANCD: 1** are hidden in local HMI after restart but are visible in PST where the values for parameter *Mode* is set to *Duo*.

10.3 Verifying the communication

Connect your PC to the substation network and ping the connected IED and the Substation Master PC, to verify that the communication is working (up to the transport layer).

The best way to verify the communication up to the application layer is to use protocol analyzer connected to the substation bus, and monitor the communication.

Verifying redundant IEC 61850-8-1 communication

Ensure that the IED receives IEC 61850-8-1 data on both port AB and CD. Browse in the local HMI to **Main menu/Diagnostics/Communication/Redundant PRP** and check that both signals LAN-A-STATUS and LAN-B-STATUS are shown as *Ok*. Remove the optical connection to one of the ports AB or CD. Verify that either signal LAN-A-STATUS or LAN-B-STATUS (depending on which connection that was removed) are shown as *Error* and the that other signal is shown as *Ok*. Be sure to re-connect the removed connection after completed verification.

Section 11 Testing IED operation

11.1 Preparing for test

11.1.1 Requirements

IED test requirements:

- Calculated settings
- Application configuration diagram
- Signal matrix (SMT) configuration
- Terminal connection diagram
- Technical manual
- Three-phase test equipment
- PCM600

The setting and configuration of the IED must be completed before the testing can start.

The terminal diagram, available in the technical reference manual, is a general diagram of the IED.

Note that the same diagram is not always applicable to each specific delivery (especially for the configuration of all the binary inputs and outputs).

Therefore, before testing, check that the available terminal diagram corresponds to the IED.

The technical manual contains application and functionality summaries, function blocks, logic diagrams, input and output signals, setting parameters and technical data sorted per function.

The test equipment should be able to provide a three-phase supply of voltages and currents. The magnitude of voltage and current as well as the phase angle between voltage and current must be variable. The voltages and currents from the test equipment must be obtained from the same source and they must have minimal harmonic content. If the test equipment cannot indicate the phase angle, a separate phase-angle measuring instrument is necessary.

Prepare the IED for test before testing a particular function. Consider the logic diagram of the tested protection function when performing the test. All included functions in the IED are tested according to the corresponding test instructions in this chapter. The functions can be tested in any order according to user preferences. Only the functions that are used (*Operation* is set to *Enabled*) should be tested.

The response from a test can be viewed in different ways:

- Binary outputs signals
- Service values on the local HMI (logical signals or phasors)
- A PC with PCM600 application configuration software in debug mode

All setting groups that are used should be tested.

This IED is designed for a maximum continuous current of four times the rated current.

Please observe the measuring accuracy of the IED, the test equipment and the angular accuracy for both of them.

Please consider the configured logic from the function block to the output contacts when measuring the operate time.

After intense testing, it is important that the IED is not immediately restarted, which might cause a faulty trip due to flash memory restrictions. Some time must pass before the IED is restarted. For more information about the flash memory, refer to section “Configuring the IED and changing settings”.

11.1.2 Preparing the IED to verify settings

If a test switch is included, start preparation by making the necessary connections to the test switch. This means connecting the test equipment according to a specific and designated IED terminal diagram.

Put the IED into the test mode to facilitate the test of individual functions and prevent unwanted operation caused by other functions. The busbar differential protection is not

included in the test mode and is not prevented to operate during the test operations. The test switch should then be connected to the IED.

Verify that analog input signals from the analog input module are measured and recorded correctly by injecting currents and voltages required by the specific IED.

To make testing even more effective, use PCM600. PCM600 includes the Signal monitoring tool, which is useful in reading the individual currents and voltages, their amplitudes and phase angles. In addition, PCM600 contains the Disturbance handling tool. The content of reports generated by the Disturbance handling tool can be configured which makes the work more efficient. For example, the tool may be configured to only show time tagged events and to exclude analog information and so on.

Check the disturbance report settings to ensure that the indications are correct.

For information about the functions to test, for example signal or parameter names, see the technical manual. The correct initiation of the disturbance recorder is made on pickup and/or release or trip from a function. Also check that the wanted recordings of analog (real and calculated) and binary signals are achieved.

Parameters can be entered into different setting groups. Make sure to test functions for the same parameter setting group. If needed, repeat the tests for all different setting groups used. The difference between testing the first parameter setting group and the remaining is that there is no need for testing the connections.

During testing, observe that the right testing method, that corresponds to the actual parameters set in the activated parameter setting group, is used.

Set and configure the function(s) before testing. Most functions are highly flexible and permit a choice of functional and tripping modes. The various modes are checked at the factory as part of the design verification. In certain cases, only modes with a high probability of coming into operation need to be checked when commissioned to verify the configuration and settings.

11.2 Activating the test mode

Put the IED into the test mode before testing. The test mode blocks all protection functions and some of the control functions in the IED, and the individual functions to be tested can be unblocked to prevent unwanted operation caused by other functions. In this way, it is possible to test slower back-up measuring functions without the interference from faster measuring functions. The busbar differential protection is not included in the test mode and is not prevented to operate during the test operations. The

test switch should then be connected to the IED.Test mode is indicated when the yellow PickupLED flashes.

1. Browse to the **TestMode** menu and press *E*.
   The **TestMode** menu is found on the local HMI under **Main menu/Test/IED test mode/TestMode**
2. Use the up and down arrows to choose *Enabled* and press *E*.
3. Press the left arrow to exit the menu.
   The dialog box *Save changes* appears.
4. Choose *Yes*, press *E* and exit the menu.
   The yellow pickupLED above the LCD will start flashing when the IED is in test mode.

11.3 Preparing the connection to the test equipment

The IED can be equipped with a test switch of type RTXP8, RTXP18 or RTXP24 or FT. The test switch and its associated test plug handles are a part of the COMBITEST or FT system of ABB, which provides secure and convenient testing of the IED.

When using the COMBITEST, preparations for testing are automatically carried out in the proper sequence, that is, for example, blocking of tripping circuits, short circuiting of CTs, opening of voltage circuits, making IED terminals available for secondary injection. Terminals 1 and 8, 1 and 18 as well as 1 and 12 of the test switches RTXP8, RTXP18 and RTXP24 respectively are not disconnected as they supply DC power to the protection IED. When FT switch is used for testing, care shall be exercised to open the tripping circuit, ahead of manipulating the CT fingers.

The RTXH test-plug handle leads may be connected to any type of test equipment or instrument. When a number of protection IEDs of the same type are tested, the test-plug handle only needs to be moved from the test switch of one protection IED to the test switch of the other, without altering the previous connections.

Use COMBITEST test system to prevent unwanted tripping when the handle is withdrawn, since latches on the handle secure it in the half withdrawn position. In this position, all voltages and currents are restored and any re-energizing transients are given a chance to decay before the trip circuits are restored. When the latches are released, the handle can be completely withdrawn from the test switch, restoring the trip circuits to the protection IED.

If a test switch is not used, perform measurement according to the provided circuit diagrams.

Never disconnect the secondary connection of a current transformer circuit without first short-circuiting the transformer's secondary winding. Operating a current transformer with the secondary winding open will cause a massive potential build up that may damage the transformer and cause personal injury.

11.4 Connecting the test equipment to the IED

Connect the test equipment according to the IED specific connection diagram and the needed input and output signals for the function under test. An example of a connection is shown in figure 30.

Connect the current and voltage terminals. Pay attention to the current polarity. Make sure that the connection of input and output current terminals and the connection of the residual current conductor is correct. Check that the input and output logical signals in the logic diagram for the function under test are connected to the corresponding binary inputs and outputs of the IED under test.

To ensure correct results, make sure that the IED as well as the test equipment are properly grounded before testing.

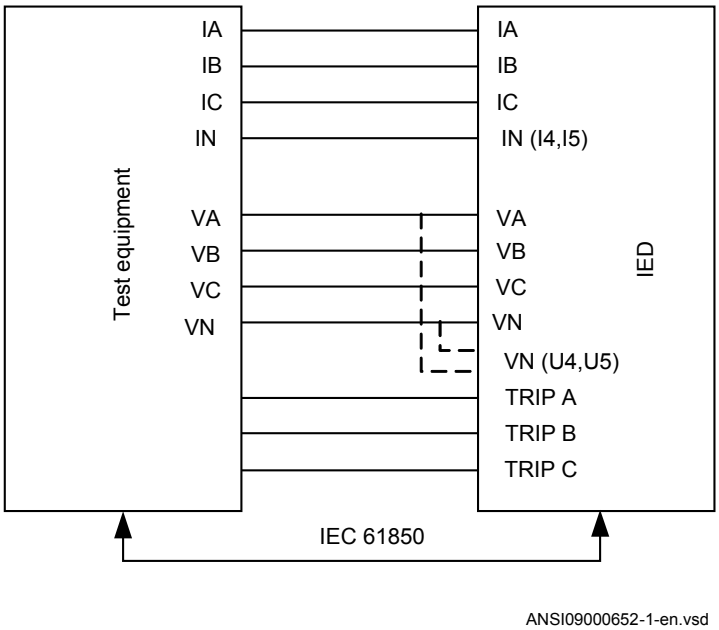

Figure 30: Connection example of the test equipment to the IED when test equipment is connected to the transformer input module

11.5 Releasing the function to be tested

Release or unblock the function to be tested. This is done to ensure that only the function or the chain of functions to be tested are in operation and that other functions are prevented from operating. Release the tested function(s) by setting the corresponding *Blocked* parameter under Function test modes to *No* in the local HMI.

When testing a function in this blocking feature, remember that not only the actual function must be activated, but the whole sequence of interconnected functions (from measuring inputs to binary output contacts), including logic must be activated. Before starting a new test mode session, scroll through every function to ensure that only the function to be tested (and the interconnected ones) have the parameters *Blocked* and eventually *EvDisable* set to *No* and *Yes* respectively. Remember that a function is also blocked if the BLOCK input signal on the corresponding function block is active, which depends on the configuration. Ensure that the logical status of the BLOCK input signal is equal to 0 for the function to be tested. Event function blocks can also be individually blocked to ensure that no events are reported to a remote station during the test. This is done by setting the parameter *EvDisable* to *Yes*.

Any function is blocked if the corresponding setting in the local HMI under **Main menu/Test/Function test modes** menu remains *Enabled*, that is, the parameter *Blocked* is set to *Yes* and the parameter *TestMode* under **Main menu/Test/IED test mode** remains active. All functions that were blocked or released in a previous test mode session, that is, the parameter *Test mode* is set to *Enabled*, are reset when a new test mode session is started.

Procedure

1. Click the **Function test modes** menu.
   The Function test modes menu is located in the local HMI under **Main menu/Test/Function test modes**.
2. Browse to the function instance that needs to be released.
3. Set parameter *Blocked* for the selected function to *No*.

11.6 Verifying analog primary and secondary measurement

Verify that the connections are correct and that measuring and scaling is done correctly. This is done by injecting current and voltage to the IED.

Apply input signals as needed according to the actual hardware and the application configuration.

1. Inject a symmetrical three-phase voltage and current at rated value.
2. Compare the injected value with the measured values.
   The voltage and current phasor menu in the local HMI is located under **Main menu/Measurements/Analog primary values** and **Main menu/Measurements/Analog secondary values**.
3. Compare the frequency reading with the set frequency and the direction of the power.
   The frequency and active power are located under **Main menu/Measurements/Monitoring/ServiceValues(MMXN)/CVMMXN:x**. Then navigate to the bottom of the list to find the frequency.
4. Inject an unsymmetrical three-phase voltage and current, to verify that phases are correctly connected.

If some setting deviates, check the analog input settings under

Main menu/Settings/General settings/Analog modules

11.7 Testing the protection functionality

Each protection function must be tested individually by secondary injection.

- Verify operating levels (trip) and timers.
- Verify alarm and blocking signals.
- Use the disturbance handling tool in PCM600 to evaluate that the protection function has received the correct data and responded correctly (signaling and timing).
- Use the event viewer tool in PCM600 to check that only expected events have occurred.

Section 12 Testing functionality by secondary injection

12.1 Testing disturbance report

12.1.1 Introduction

The following sub-functions are included in the disturbance report function:

- Disturbance recorder
- Event list
- Event recorder
- Trip value recorder
- Indications

If the disturbance report is enabled, then its sub-functions are also set up and so it is not possible to only disable these sub-functions. The disturbance report function is disabled (parameter *Operation = Disabled*) in PCM600 or the local HMI under **Main menu/Settings/IED Settings/Monitoring/Disturbance report/DRPRDRE:1**.

12.1.2 Disturbance report settings

When the IED is in test mode, the disturbance report can be made active or inactive. If the disturbance recorder is turned on during test mode, recordings will be made. When test mode is switched off all recordings made during the test session are cleared.

Setting *OpModeTest* for the control of the disturbance recorder during test mode are located on the local HMI under **Main menu/Settings/IED Settings/Monitoring/Disturbance report/DRPRDRE:1**.

12.1.3 Disturbance recorder (DR)

A *Manual Trig* can be started at any time. This results in a recording of the actual values from all recorded channels.

The *Manual Trig* can be started in two ways:

1. From the local HMI under **Main menu/Disturbance records**.
   1.1. Enter on the row at the bottom of the HMI called **Manual trig**.

A new recording begins. The view is updated if you leave the menu and return.

1.2. Navigate to **General information** or to **Trip values** to obtain more detailed information.

2. Open the Disturbance handling tool for the IED in the plant structure in PCM600.
   2.1. Right-click and select *Execute manual Trig* in the window *Available recordings in IED*.
   2.2. Read the required recordings from the IED.
   2.3. Refresh the window *Recordings* and select a recording.
   2.4. Right-click and select *Create Report* or *Open With* to export the recordings to any disturbance analyzing tool that can handle Comtrade formatted files.

Evaluation of the results from the disturbance recording function requires access to a PC either permanently connected to the IED or temporarily connected to the Ethernet port (RJ-45) on the front. The PCM600 software package must be installed in the PC.

Disturbance upload can be performed by the use of PCM600 or by any third party tool with IEC 61850 protocol. Reports can automatically be generated from PCM600. Disturbance files can be analyzed by any tool reading Comtrade formatted disturbance files.

It could be useful to have a printer for hard copies. The correct start criteria and behavior of the disturbance recording function can be checked when IED protective functions are tested.

When the IED is brought into normal service it is recommended to delete all recordings, made during commissioning to avoid confusion in future fault analysis.

All recordings in the IED can be deleted in two ways:

1. in the local HMI under **Main menu/Clear/Reset disturbances**, or
2. in the Disturbance handling tool in PCM600 by selecting *Delete all recordings in the IED...* in the window *Available Recordings in IED*.

12.1.4 Event recorder (ER) and Event list (EL)

The result from the event recorder and event list can be viewed on the local HMI or, after upload, in PCM600 as follows:

1. on the local HMI under **Main menu/Events**, or in more details via
2. the *Event Viewer* in PCM600.
   The internal FIFO register of all events will appear when the event viewer is launched.

When the IED is brought into normal service it is recommended to delete all events resulting from commissioning tests to avoid confusion in future fault analysis. All events in the IED can be cleared in the local HMI under **Main Menu//Clear/Clear internal event list** or **Main menu/Clear/Clear process event list**. It is not possible to clear the event lists from PCM600.

When testing binary inputs, the event list (EL) might be used instead. No uploading or analyzing of registrations is then needed since the event list keeps running, independent of start of disturbance registration.

12.2 Identifying the function to test in the technical reference manual

Use the technical manual to identify function blocks, logic diagrams, input and output signals, setting parameters and technical data.

12.3 Differential protection

12.3.1 Transformer differential protection T2WPDIF (87T) and T3WPDIF (87T)

Prepare the IED for verification of settings outlined in section "Preparing the IED to verify settings".

12.3.1.1 Verifying the settings

1. Go to **Main menu/Test/Function test modes/Differential protection** and make sure that the restricted earth fault protection, low impedance function REFPDIF (87N) is set to *Disabled* and that the four step residual overcurrent function EF4PTOC (51N/67N) under **Main menu/Test/Function test modes/Current protection** is set to *Disabled*, since they are configured to the same current transformer inputs as the transformer differential protection. Make sure that the transformer differential functions T2WPDIF (87T) or T3WPDIF (87T) are unblocked.
2. Connect the test set for injection of three-phase currents to the current terminals of the IED, which are connected to the CTs on the HV side of the power transformer.
3. Increase the current in phase A until the protection function operates and note the operating current.

4. Check that the trip and alarm contacts operate according to the configuration logic.
5. Decrease the current slowly from operate value and note the reset value.
   Depending on the power transformer phase shift/vector group (Yd (Wye/Delta) and so on), the single-phase injection current may appear as differential current in one or two phases and the operating value of the injected single-phase current will be different.
6. Check in the same way the function by injecting current in phases B and C respectively.
7. Inject a symmetrical three-phase current and note the operate value.
8. Connect the timer and set the current to twice the operate value.
9. Switch on the current and note the operate time.
10. Check in the same way the measuring circuits connected to the CTs on the LV side and other current inputs to the transformer differential protection.
11. Finally check that trip information is stored in the event menu.

Information on how to use the event menu is found in the operator's manual.

12. If available on the test set, a second harmonic current of about 20% (assumes 15% setting on I1/I2 ratio parameter) can be added to the fundamental frequency in phase A. Increase the current in phase A above the pickup value measured in step 6. Repeat test with current injection in phases B and C respectively.
    The balancing of currents flowing into and out of the differential zone is checked by primary injection testing, see section "".
    Fifth harmonic blocking can be tested in a similar way.

For more detailed formulas please refer to the application manual.

12.3.1.2 Completing the test

Continue to test another function or end the test by changing the *TestMode* setting to *Disabled*. Restore connections and settings to their original values, if they were changed for testing purposes.

12.3.2 High impedance differential protection HZPDIF (87)

Prepare the IED for verification of settings outlined in section "Preparing the IED to verify settings".

12.3.2.1 Verifying the settings

1. Connect single-phase or three-phase test set to inject the operating voltage. The injection is done across the measuring branch.

   The required trip and alarm voltage, as well as the used stabilizing resistance value must be set in the function. Note as well that used CT input in the IED must have ratio set as 1:1. This is essential for the measurement of the expected value. Normally a slightly higher operating value is no problem as the sensitivity is not influenced much.

2. Increase the voltage and make note of the operate value *Pickup*. This is done by manual testing and without trip of the test set.
3. Connect the trip contact to the test set to stop the test set for measurement of trip times below.
4. Reduce the voltage slowly and make note of the reset value. The reset value must be high for this function.
5. Check the operating time by injecting a voltage corresponding to 1.2 ^{x} *Pickup* level. Make note of the measured trip time.
6. If required, verify the trip time at another voltage. Normally 2 ^{x} *Pickup* is selected.
7. If used, measure the alarm level operating value. Increase the voltage and make note of the operate value *AlarmPickup*. This is done with manual test and without trip of the test set.
8. Measure the operating time on the alarm output by connecting the stop of the test set to an output from *tAlarm*. Inject a voltage 1.2 ^{x} *AlarmPickup* and measure the alarm time.
9. Check that trip and alarm outputs operate according to the configuration logic.
10. Finally check that pickup and alarm information is stored in the event menu and if a serial connection to the SA is available verify that the correct and only the required signals are presented on the local HMI and on the SCADA system.

    Information on how to use the event menu is found in the operator's manual.

12.3.2.2 Completing the test

Continue to test another function or end the test by changing the *TestMode* setting to *Disabled*. Restore connections and settings to their original values, if they were changed for testing purposes.

12.3.3 Generator differential protection GENPDIF (87G)

Prepare the IED for verification of settings outlined in section "Preparing the IED to verify settings".

12.3.3.1 Verifying the settings

1. Go to **Main menu/Test/Function test modes/Differential protection** and make sure all other functions, configured to the same current transformer inputs as the generator differential protection, are set off. Make sure that the generator differential function is unblocked.
2. Connect the test set for injection of three-phase current to the current IEDs, which are connected to the CTs on the HV side of the generator.
3. Increase the current in phase A until the protection function operates and note the operating current.
4. Check that trip and alarm contacts operate according to the configuration logic.
5. Decrease the current slowly from operate value and note the reset value.
6. Check in the same way the function by injecting current in phases B and C.
7. Inject a symmetrical three-phase current and note the operate value.
8. Connect the timer and set the current to twice the operate value.
9. Switch on the current and note the operate time.
10. Check in the same way the functioning of the measuring circuits connected to the CTs on the neutral point side of the generator.
11. Finally check that trip information is stored in the event menu.

    Information on how to use the event menu is found in the operator's manual.

12. If available on the test set a second-harmonic current of about 20% (assumes 15% setting on I1/I2 ratio parameter) can be added to the fundamental tone in phase A. Increase the current in phase A above the pickup value measured in step 3.
    Repeat test with current injection in phases B and C respectively.
    Fifth-harmonic blocking can be tested in a similar way.
    The balancing of currents flowing into and out of the differential zone is typically checked by primary testing.

12.3.3.2 Completing the test

Continue to test another function or end the test by changing the *TestMode* setting to *Disabled*. Restore connections and settings to their original values, if they were changed for testing purposes.

12.3.4 Restricted earth-fault protection, low impedance REFPDIF (87N)

Prepare the IED for verification of settings outlined in section "Preparing the IED to verify settings".

12.3.4.1 Verifying the settings

1. Connect the test set for single-phase current injection to the protection terminals connected to the CT in the power transformer neutral-to-ground circuit.
2. Increase the injection current and note the operating value of the protection function.
3. Check that all trip and pickup contacts operate according to the configuration logic.
4. Decrease the current slowly from operate value and note the reset value.
5. Connect the timer and set the current to ten times the value of the IDMin setting.
6. Switch on the current and note the operate time.
7. Connect the test set to terminal A and neutral of the three-phase current input configured to REFPDIF (87N). Also inject a current higher than half the *Idmin* setting in the neutral-to-ground circuit with the same phase angle and with polarity corresponding to an internal fault.
8. Increase the current injected in A, and note the operate value. Decrease the current slowly and note the reset value.
9. Inject current into terminals B and C in the same way as in step 7 above and note the operate and reset values.
10. Inject a current equal to 10% of rated current into terminal A.
11. Inject a current in the neutral-to-ground circuit with the same phase angle and with polarity corresponding to an external fault.
12. Increase the current to five times the operating value and check that the protection does not operate.
13. Finally check that trip information is stored in the event and disturbance recorder.

12.3.4.2 Completing the test

Continue to test another function or end the test by changing the *TestMode* setting to *Disabled*. Restore connections and settings to their original values, if they were changed for testing purposes.

12.4 Impedance protection

12.4.1 Full scheme distance protection, mho characteristic ZMHPDIS (21)

Prepare the IED for verification of settings outlined in section "Preparing the IED to verify settings".

Keep the current constant when measuring operating characteristics. Keep the current as close as possible to its rated value or lower. But make sure it is higher than the set minimum operating current.

Ensure that the maximum continuous current in an IED does not exceed four times its rated value, if the measurement of the operating characteristics runs under constant voltage conditions.

To verify the mho characteristic, at least two points should be tested.

In the following, three test points are proposed. The mho characteristic always goes through the origin, which automatically gives a fourth point for the characteristic.

12.4.2 Distance protection zones, quadrilateral characteristic ZMFPDIS (21)

Prepare the IED for verification of settings outlined in section "Requirements" and section "Preparing for test" in this chapter.

Measure operating characteristics during constant current conditions. Keep the measured current as close as possible to its rated value or lower. But make sure it is higher than the set minimum operating current.

Ensure that the maximum continuous current to the IED does not exceed four times its rated value, if the measurement of the operating characteristics runs under constant voltage conditions.

The test procedure has to take into consideration that the shaped load encroachment characteristic is active. It is therefore necessary to check the setting. To verify the settings with the shaped load encroachment characteristic the test should be carried out according to Figure 31 and Figure 32 and Table 12 and Table 13. In cases where the load encroachment characteristic is activated tests according to the adjusted figures should be carried out.

To verify the settings for the operating points according to the following fault types should be tested:

- One phase-to-phase fault
- One phase-to-ground fault

The shape of the operating characteristic depends on the values of the setting parameters.

The figures illustrating the characteristic for the distance protection function can be used for settings with and without load encroachment. The solid lines designate the diagram applicable when the load current compensation *operationLdCom* parameter is set to 1 (Enabled). This is the default setting. The solid line and all test points except 13 are valid for this setting.
When *operationLdCom* parameter is set to Disabled then the dotted lines and test point 13 are valid. Test points 5, 6, and 7 are not valid for this measurement.

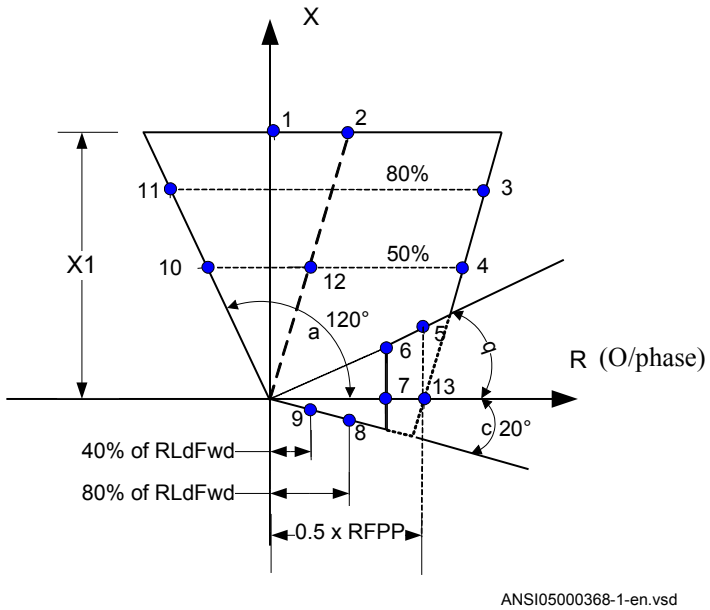

Figure 31: Distance protection characteristic with test points for phase-to-phase measurements

Table 12: Test points for phase-to-phase loops A-B (Ohm/Loop)

Test point	Reach	Set value	Comments
1	X	$X1_{set}$	
	R	0	
2	X	$X1_{set}$	
	R	$R1_{set}$	
3	X	0.8 x $X1_{set}$	
	R	0.8 x $R1_{set}$+ RFPP/2	
4	X	0.5 x $X1_{set}$	
	R	0.5 x $R1_{set}$+ RFPP/2	
5	X	0.85 x RFPP x tan (LdAngle)	*LdAngle* = angle for the maximal load transfer
	R	0.85 x RFPP	
6	X	RLdFwd x tan (LdAngle)	
	R	RLdFwd	
7	X	0	
	R	RLdFw	
8	X	–0.2143 x RFPP/2	Exact: 0.8 x RFPP/2 (ArgDir=20°)
	R	0.8 x RFPP/2	
9	X	–0.4 x RLdFwd x tan(ArgDir=20°)	
	R	0.4 x RLdFwd	
10	X	0.5 x $X1_{set}$	Exact –0.5 x $R1_{set}$ x tan(ArgNegRes=30°)
	R	–0.23 x $X1_{set}$	
11	X	0.8 x $X1_{set}$	Exact –0.5 x $R1_{set}$ x tan(ArgNegRes=30°)
	R	–0.37 x $X1_{set}$	
12	X	0.5 x $X1_{set}$	
	R	0.5 x $R1_{set}$	
13	X	0	Only used when *OperationLdCmp* setting is 0 (Disabled)
	R	0.5 x RFPP	

Table 12 is used in conjunction with Figure 31.

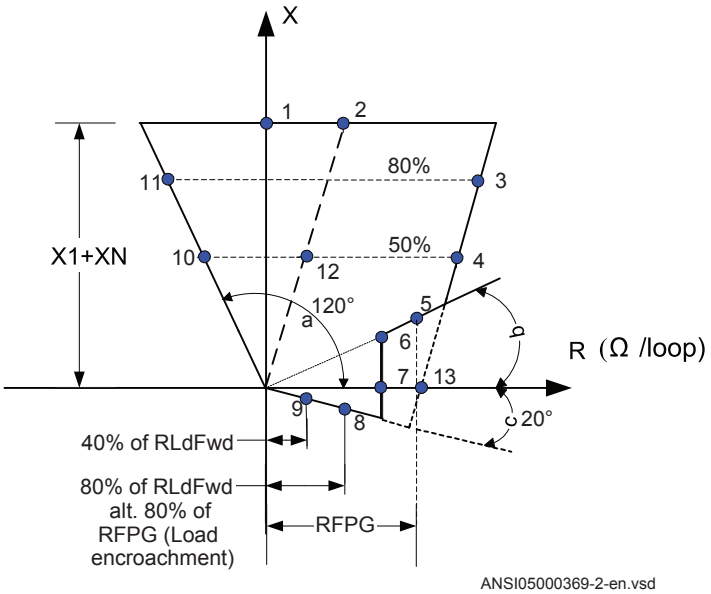

Figure 32: Distance protection characteristic with test points for phase-to-ground measurements

Table 13 is used in conjunction with Figure 32.

Table 13: Test points for phase-to-ground C-G (Ohm/Loop)

Test point	Reach	Value	Comments
1	X	$(2 \times X1_{set}+X0_{set})/3$	
	R	0	
2	X	$(2 \times X1_{set}+ X0_{set})/3$	
	R	$2 \times R1_{set}+ R0_{set})/3$	
3	X	$0.8 \times (2 \times X1_{set}+ X0_{set})/3$	
	R	$0.8 \times (2 \times R1_{set}+ R0_{set})/3 +RFPG_{set}$	
4	X	$0.5 \times (2 \times X1_{set}+ R0_{set})/3$	
	R	$0.5 \times (2 \times R1_{set}+R0_{set})/3 + RFPG_{set}$	
5	X	$0.85 \times RFPG_{set} \times \tan(LdAngleset)$	LdAngle = angle for the maximal load transfer
	R	0.85 x RFPG	
6	X	RLdFwdset x tan(LdAngleSet)	
	R	$RLdFwd_{set}$	
7	X	0	
	R	$RLdFwd_{set}$	
Table continues on next page			

Test point	Reach	Value	Comments
8	X	–02143 x $RLdFwd_{set}$	Exact: 0.8 x RFPE x tan (ArgDir=20°)
	R	0.8 x $RLdFwd_{set}$	
9	X	–0.8 x $RLdFw_{set}$ x tan(ArgDir=20°) –0.8 x $RLdFwd_{set}$ x tan(ArgDir=20°)	
	R	0.8 x $RLdFwd_{set}$	
10	X	0.17 x (2 x $X1_{set}$ + $X0_{set}$)	Exact: 0.5 x (2 x $X1_{set}$ $X0_{set}$)/3
	R	-0.36 x (2 x $X1_{set}$ + $X0_{set}$)	Exact: 0.5 x (2$X1_{set}$ + $X0_{set}$)/(3 x tan(AgNegDir=30°)
11	X	0.27 x (2 x $X1_{set}$+$X0_{set}$)	Exact: 0.8 x (2 x $X1_{set}$ + $X0_{set}$)/3
	R	–0.57 x (2 x $X1_{set}$ + $X0_{set}$)	Exact: 0.8 x (2X1set + X0set)/(3 x tan(AgNegDir=30°)
12	X	0.5 x (2 x $X1_{set}$ + $X0_{set}$)/3	
	R	0.5 x (2 x $R1_{set}$ + $R0_{set}$)/3	
13	X	0	
	R	RFPG	

12.4.2.1 Measuring the operating limit of set values in cases without shaped load encroachment characteristics (OperationLdCmp=disabled)

Procedure for phase-to-phase fault A–B.

1. Subject the IED to healthy normal load conditions for at least two seconds.
2. Apply the fault condition and slowly decrease the measured impedance to find the operating value of the phase-to-phase fault for zone 1 according to test point 1 in Figure 31 and Table 12. Compare the result of the measurement with the set value.
3. Repeat steps 1 to 3 to find the operating value for test point 2, 3 in Table 12 and the trip value for the phase-to-ground loop according to test point 1, 2, 3 in Table 13.
   Observe that the zones that are not tested have to be blocked and the zone that is tested has to be released.
4. Repeat steps 1 to 5 to find the trip value for the phase-to-ground fault C-G according to Figure 32 and Table 13

Test points 8 and 9 are intended to test the directional lines of impedance protection. Since directionality is a common function for all 5 measuring zones, it is only necessary to test points 6, 7, 8 and 9 once, in the forward direction (the largest reverse zone can be used to facilitate the test) in order to test the accuracy of

directionality (directional angles). Directional functionality testing (trip inside, no-trip outside) should always be carried for all impedance zones set with directionality (forward or reverse).

12.4.2.2 Measuring the operating time of distance protection zones

1. Subject the IED to healthy normal load conditions for at least two seconds.
2. Apply the fault condition to find the operating time for the phase-to-phase fault according to test point 12 in Figure 31 and Table 12 for zone 1. Compare the result of the measurement to the setting *tPPZ1*.
3. Repeat steps 1 to 3 to find the trip time for the phase-to-ground fault according to test point 12 in Figure 32 and Table 13. Compare the result of the measurement to the setting *t1PG*.
4. Repeat steps 1 to 3 to find the operating time for all other used measuring zones. The zones that are not tested have to be blocked and the zone that is tested has to be released.
   When the load-shaped characteristic is activated (*OperationLdCmp* = "Enabled"), the test point for phase-to-phase faults is 12 in Figure 31 and Table 12 and for phase-ground faults according to P12 in Figure 32 and Table 13.

12.4.2.3 Completing the test

Continue to test another function or end the test by changing the *TestMode* setting to *Disabled*. Restore connections and settings to their original values, if they were changed for testing purposes.

12.4.3 Distance protection zones, quadrilateral characteristic ZMFCPDIS (21)

Prepare the IED for verification of settings outlined in section "Preparing the IED to verify settings".

Measure operating characteristics during constant current conditions. Keep the measured current as close as possible to its rated value or lower. But make sure it is higher than the set minimum operating current.

Ensure that the maximum continuous current to the IED does not exceed four times its rated value, if the measurement of the operating characteristics runs under constant voltage conditions.

The test procedure has to take into consideration that the shaped load encroachment characteristic is active. It is therefore necessary to check the setting. To verify the settings with the shaped load encroachment characteristic the test should be carried out according to figures 31 and 32 and tables 12 and 13. In cases where the load encroachment characteristic is activated tests according to the adjusted figures should be carried out.

To verify the settings for the operating points according to the following fault types should be tested:

- One phase-to-phase fault
- One phase-to-ground fault

The shape of the operating characteristic depends on the values of the setting parameters.

The figures illustrating the characteristic for the distance protection function can be used for settings with and without load encroachment. The solid lines designate the diagram applicable when the load current compensation *operationLdCom* parameter is set to 1 (Enabled). This is the default setting. The solid line and all test points except 13 are valid for this setting.
When it is set to 0 (Disabled) then the dotted lines and test point 13 are valid. Test points 5, 6, and 7 are not valid for this measurement.

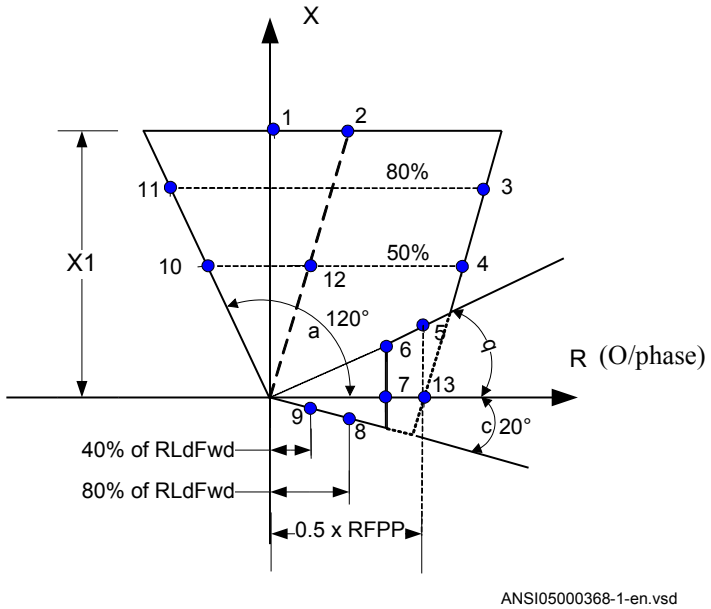

Figure 33: Distance protection characteristic with test points for phase-to-phase measurements

Table 14: Test points for phase-to-phase loops A-B (Ohm/Loop)

Test point	Reach	Set value	Comments
1	X	$X1_{set}$	
	R	0	
2	X	$X1_{set}$	
	R	$R1_{set}$	
3	X	0.8 x $X1_{set}$	
	R	0.8 x $R1_{set}$+ RFPP/2	
4	X	0.5 x $X1_{set}$	
	R	0.5 x $R1_{set}$+ RFPP/2	
5	X	0.85 x RFPP x tan (LdAngle)	*LdAngle* = angle for the maximal load transfer
	R	0.85 x RFPP	
6	X	RLdFwd x tan (LdAngle)	
	R	RLdFwd	
7	X	RLdFwd x tan (LdAngle)	
	R	0	
8	X	–0.2143 x RFPP/2	Exact: 0.8 x RFPP/2 (ArgDir=20°)
	R	0.8 x RFPP/2	

Table continues on next page

Test point	Reach	Set value	Comments
9	X	–0.4 x RLdFwd x tan(ArgDir=20°)	
	R	0.4 x RLdFwd	
10	X	0.5 x $X1_{set}$	Exact –0.5 x $R1_{set}$ x tan(ArgNegRes=30°)
	R	–0.23 x $X1_{set}$	
11	X	0.8 x $X1_{set}$	Exact –0.5 x $R1_{set}$ x tan(ArgNegRes=30°)
	R	–0.37 x $X1_{set}$	
12	X	0.5 x $X1_{set}$	
	R	0.5 x $R1_{set}$	
13	X	0	Only used when *OperationLdCmp* setting is 0 (Disabled)
	R	0.5 x RFPP	

Table 12 is used in conjunction with figure 31.

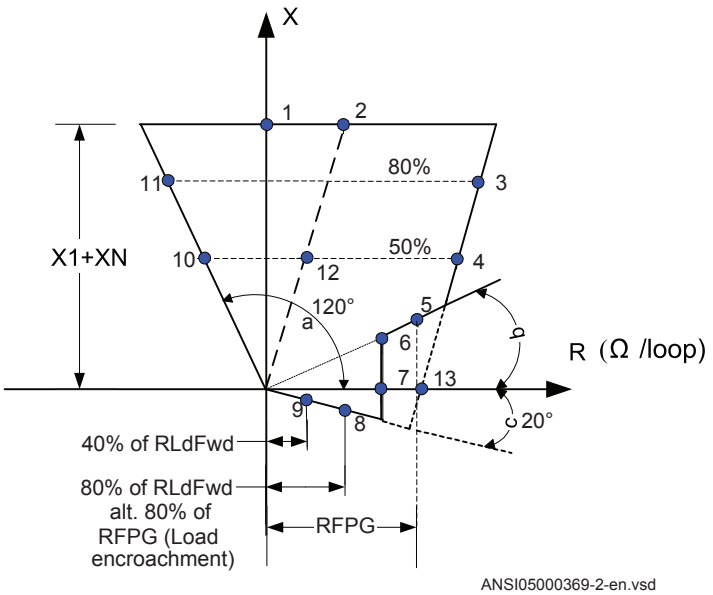

Figure 34: Distance protection characteristic with test points for phase-to-ground measurements

Table 13 is used in conjunction with figure 32.

Table 15: Test points for phase-to-ground C-G (Ohm/Loop)

Test point	Reach	Value	Comments
1	X	(2 x $X1_{set}$+$X0_{set}$)/3	
	R	0	
2	X	(2 x $X1_{set}$+ $X0_{set}$)/3	
	R	2 x $R1_{set}$+ $R0_{set}$)/3	
3	X	0.8 x (2 x $X1_{set}$+ $X0_{set}$)/3	
	R	0.8 x (2 x $R1_{set}$+ $R0_{set}$)/3 +$RFPG_{set}$	
4	X	0.5 x (2 x $X1_{set}$+ $R0_{set}$)/3	
	R	0.5 x (2 x $R1_{set}$+$R0_{set}$)/3 + $RFPG_{set}$	
5	X	0.85 x $RFPG_{set}$ x tan(LdAngleset)	LdAngle = angle for the maximal load transfer
	R	0.85 x RFPG	
6	X	RLdFwdset x tan(LdAngleSet)	
	R	$RLdFwd_{set}$	
7	X	0	
	R	$RLdFwd_{set}$	
8	X	–02143 x $RLdFwd_{set}$	Exact: 0.8 x RFPG x tan (ArgDir=20°)
	R	0.8 x $RLdFwd_{set}$	
9	X	–0.8 x $RLdFwd_{set}$ x tan(ArgDir=20°)	
	R	0.8 x $RLdFwd_{set}$	
10	X	0.17 x (2 x $X1_{set}$ + X0 $_{set}$)	Exact: 0.5 x (2 x $X1_{set}$ X0 $_{set}$)/3
	R	-0.36 x (2 x $X1_{set}$ + $X0_{set}$)	Exact: 0.5 x (2$X1_{set}$ + $X0_{set}$)/(3 x tan(AgNegDir=30°)
11	X	0.27 x (2 x $X1_{set}$+$X0_{set}$)	Exact: 0.8 x (2 x $X1_{set}$ + $X0_{set}$)/3
	R	–0.57 x (2 x $X1_{set}$ + $X0_{set}$)	Exact: 0.8 x (2X1set + X0set)/(3 x tan(AgNegDir=30°)
12	X	0.5 x (2 x $X1_{set}$ + $X0_{set}$)/3	
	R	0.5 x (2 x $R1_{set}$ + $R0_{set}$)/3	
13	X	0	
	R		

12.4.3.1 Measuring the operating limit of set values in cases without shaped load encroachment characteristics (OperationLdCmp=Disabled)

Procedure for phase-to-phase fault A–B.

1. Subject the IED to healthy normal load conditions for at least two seconds.
2. Apply the fault condition and slowly decrease the measured impedance to find the operating value of the phase-to-phase fault for zone 1 according to test point 1 in figure 31 and table 12. Compare the result of the measurement with the set value.
3. Repeat steps 1 to 3to find the operating value for test point 2, 3 in table 12 and the operating value for the phase-to-ground loop according to test point 1, 2, 3 in table 13.
   Observe that the zones that are not tested have to be blocked and the zone that is tested has to be released.
4. Repeat steps 1 to 5 to find the operating value for the phase-to-ground fault C-G according to figure 32 and table 13

Test points 8 and 9 are intended to test the directional lines of impedance protection. Since directionality is a common function for all 5 measuring zones, it is only necessary to test points 6, 7, 8 and 9 once, in the forward direction (the largest reverse zone can be used to facilitate the test) in order to test the accuracy of directionality (directional angles). Directional functionality testing (trip inside, no-trip outside) should always be carried for all impedance zones set with directionality (forward or reverse).

12.4.3.2 Measuring the operate time of distance protection zones

1. Subject the IED to healthy normal load conditions for at least two seconds.
2. Apply the fault condition to find the operating time for the phase-to-phase fault according to test point 10 in figure 31 and table 12 for zone 1. Compare the result of the measurement with the setting *t1PP*.
3. Repeat steps 1 to 3 to find the operating time for the phase-to-ground fault according to test point 10 in figure 32 and table 13. Compare the result of the measurement with the setting *t1PG*.
4. Repeat steps 1 to 3 to find the operating time for all other used measuring zones.
   Observe that the zones that are not tested have to be blocked and the zone that is tested has to be released.
   When the load shaped characteristic is activated (*OperationLdCmp = Enabled*) the test point for phase-to-phase faults is 12 in figure 31 and table 12 and for phase-ground faults according to P12 in figure 32 and table 13.

12.4.3.3 Completing the test

Continue to test another function or end the test by changing the *TestMode* setting to *Disabled*. Restore connections and settings to their original values, if they were changed for testing purposes.

12.4.4 Pole slip protection PSPPPAM (78)

Prepare the IED for verification of settings as outlined in section "Requirements" and section "Preparing for test" in this chapter.

12.4.4.1 Verifying the settings

It is assumed that setting of the pole slip protection function PSPPPAM (78) is done according to impedances as seen in figure 35 and figure 36.

The test is done by means of injection of three-phase current and three-phase voltage from a modern test device. This test device shall be able to give voltage and current with the possibility to change voltage and current amplitude and the angle between the injected voltage and current. The parameter setting shall be according to the real application chosen values.

Procedure

1. Feed the IED with current and voltage corresponding to a normal operation point Injected voltage V equal to base voltage (*VBase*) and the injected current I equal to half the base current (*IBase*). The angle between the voltage and current shall be 0°.
2. With maintained amplitude of the injected voltage the current amplitude and angle is changed to a value ZC/2.
   This is done with a speed so that the final impedance is reached after 1 second.
   As the injected voltage is higher than 0.92 *VBase* no PICKUP signal should be activated.
3. With reduced amplitude of the injected voltage to 0.8 *VBase* the current amplitude and angle is changed to a value ZC/2.
   This is done with a speed so that the final impedance is reached after 1 second.
   As the injected voltage is lower than 0.92 *VBase* the PICKUP signal should be activated.
4. With reduced amplitude of the injected voltage to 0.8 *VBase* the current amplitude and angle is changed via ZC/2 to a value corresponding to half *IBase* and 180° between the injected current and voltage.
   This is done with a speed so that the final impedance is reached after 1 second.
   As the injected voltage is lower than 0.92 *VBase* the PICKUP signal should be activated. In addition to this the signal ZONE1 should be activated.

5. Set *N1Limit* to 1 and repeat step 4.
   Now the signals TRIP1 and TRIP should be activated.
6. With reduced amplitude of the injected voltage to 0.8 *VBase* the current amplitude and angle is changed via ZC + (ZA – ZC)/2 to a value corresponding to half *IBase* and 180° between the injected current and voltage.
   This is done with a speed so that the final impedance is reached after 1s. As the injected voltage is lower than 0.92 *VBase* the PICKUP signal should be activated. In addition to this the signal ZONE2 should be activated.
7. Set *N2Limit* to 1 and repeat step 6.
   Now the signals TRIP2 and TRIP should be activated.

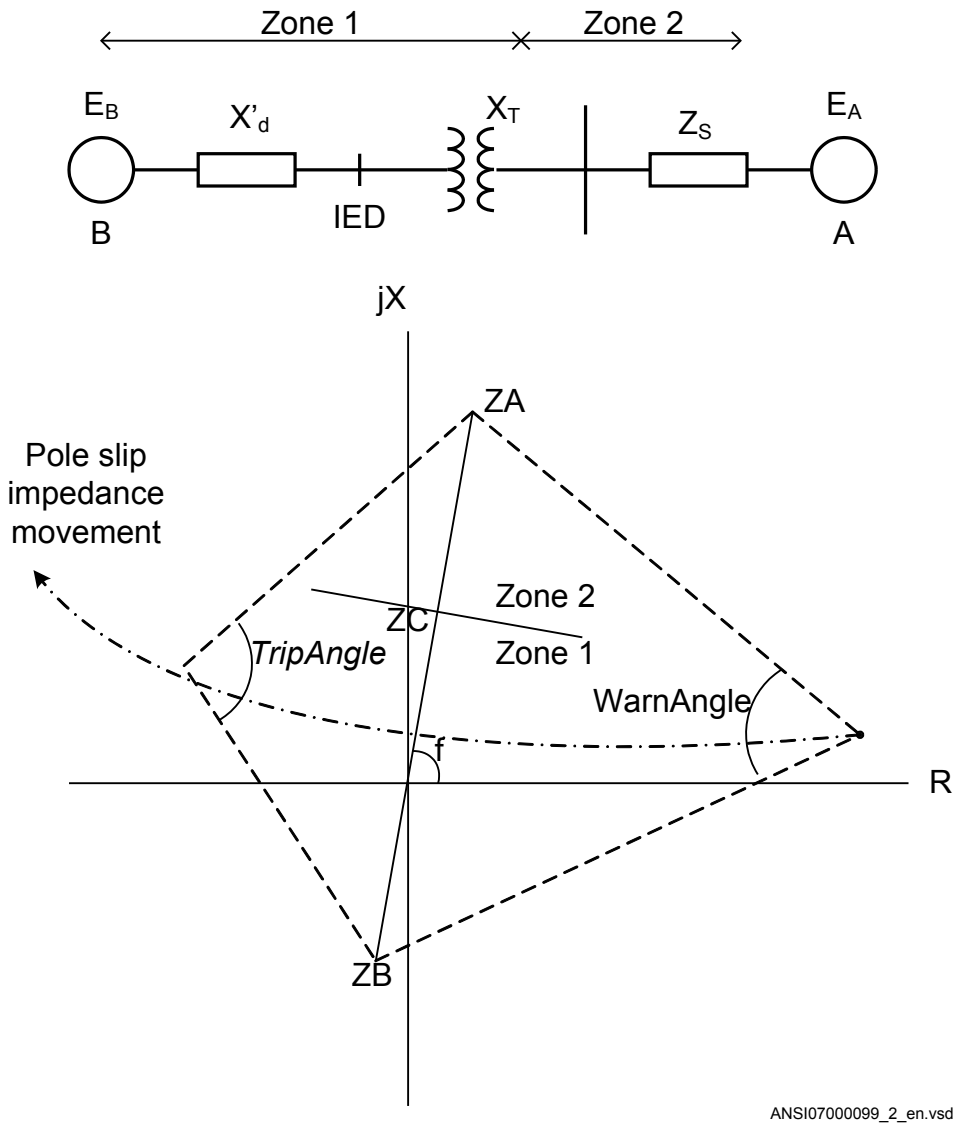

Figure 35: Setting of the pole slip protection PSPPPAM (78)

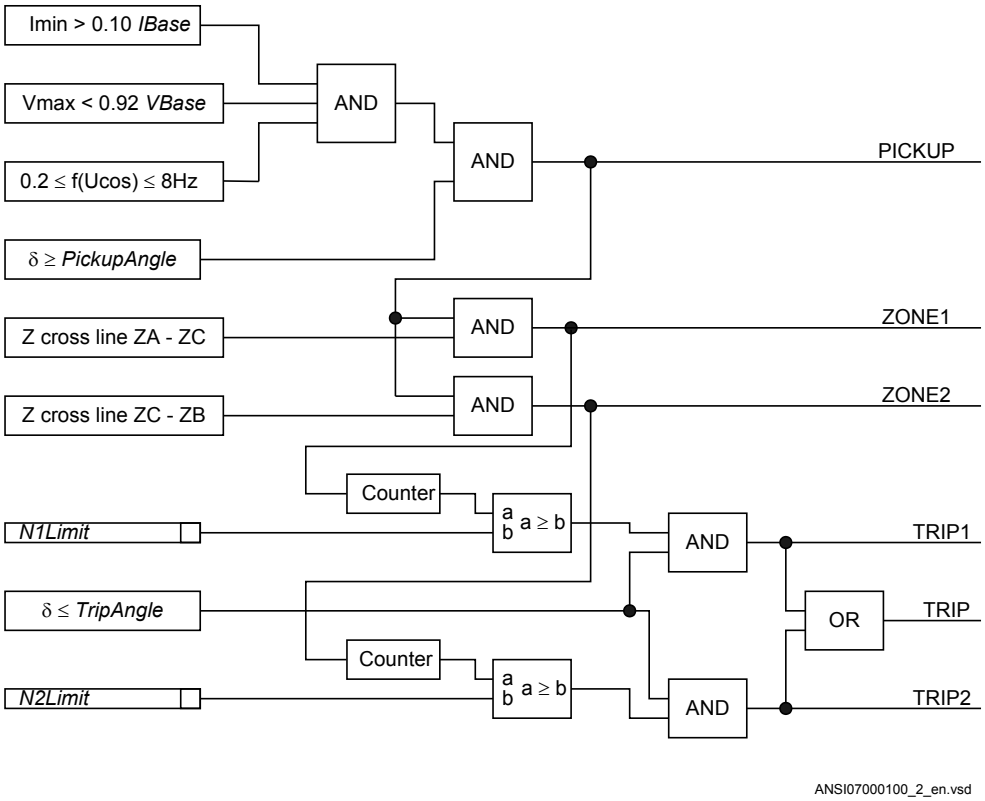

Figure 36: Logic diagram of the pole slip protection PSPPPAM (78)

12.4.4.2 Completing the test

Continue to test another function or end the test by changing the *TestMode* setting to *Disabled*. Restore connections and settings to their original values, if they were changed for testing purposes.

12.4.5 Out-of-step protection OOSPPAM

The out-of-step protection OOSPPAM (78) function in the IED can be used for both generator protection and as well for line protection applications.

The main purpose of the OOSPPAM (78) function is to detect, evaluate, and take the required action during pole slipping occurrences in the power system.

The OOSPPAM (78) function detects pole slip conditions and trips the generator as fast as possible, after the first pole-slip if the center of oscillation is found to be in zone 1, which normally includes the generator and its step-up power transformer. If the center of oscillation is found to be further out in the power system, in zone 2, more

than one pole-slip is usually allowed before the generator-transformer unit is disconnected. A parameter setting is available to take into account the circuit breaker opening time. If there are several out-of-step relays in the power system, then the one which finds the center of oscillation in its zone 1 should operate first.

Two current channels I3P1 and I3P2 are available in OOSPPAM function to allow the direct connection of two groups of three-phase currents; that may be needed for very powerful generators, with stator windings split into two groups per phase, when each group is equipped with current transformers. The protection function performs a simple summation of the currents of the two channels I3P1 and I3P2.

12.4.6 Verifying the settings

The test of the out-of-step protection function is made to verify that the trip is issued if the following events happen.

- the impedance, seen by the function, enters the lens characteristic from one side and leaves it from the opposite side
- the trip is issued according to the settings *TripAngle* and *tBreaker*

The tripping zone needs to be detected and confirmed. The test may be performed by taking into account the following key points that are shown in Figure 37:

- the point RE (RE = Receiving End)
- the intersection between the line segment SE-RE and the X-line, which is defined through the setting *ReachZ1*
- the point SE (SE = Sending End)

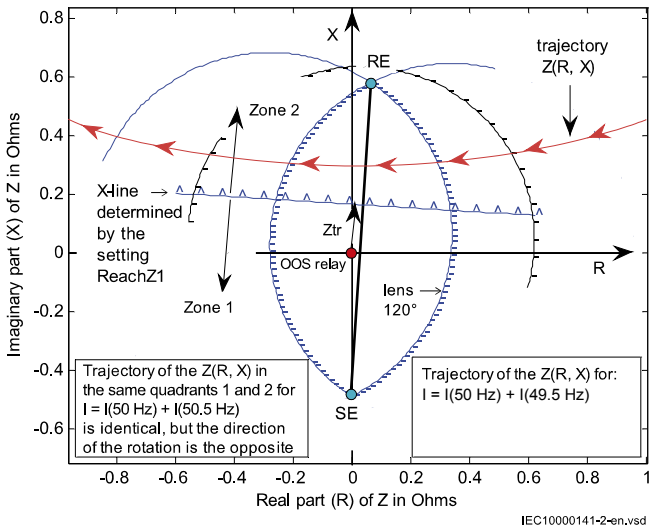

Figure 37: Trajectory of the impedance Z(R, X) for the injected current with two components: a 50 Hz component and a 49.5 Hz current component

The test of the out-of-step protection function requires the injection of the analog quantities for a quite long time. The rating of the analogue channels is considered in order to avoid any hardware damage. The test current is lower than the continuous permissive overload current I_{ovrl} of the protection current channels of the transformer module.

If the rated secondary current I_{rs} of the analog channel is 1 A, then the maximum current test I_{ts} is

$$I_{ts} \le I_{ovrl} = 4 \times I_{rs} = 4A$$

(Equation 1)

If the CT of the generator has ratio 9000/1 A, then in primary values

$$I_t \le I_{ovrl,p} = I_{ovrl} \times \frac{I_{rp}}{I_{rs}} = 4 \times \frac{9000}{1} = 36000A$$

(Equation 2)

Reference is made to the numerical values of the example, explained in the “Setting guidelines” of the *Application Manual*. A test current equal to 2.5 time the base current of the generator is chosen; this choice is related to the selected test voltage that is applied while testing the point SE and RE.

$$I_t = 2.5 \times I_{Base} = 2.5 \times 8367 = 20918A$$

(Equation 3)

The parameter *ReachZ1* defines the boundary between zone 1 and zone 2; it is expressed in percent of the parameter *ForwardX*. If the setting of *ReachZ1 = 12%*, then corresponding primary value of the reactance is

$$X_{RZ1} = \frac{ReachZ1}{100} \times \frac{ForwardX}{100} \times ZBase = \frac{12}{100} \times \frac{59.33}{100} \times 0.9522 = 0.068\Omega$$

(Equation 4)

The calculation of the test voltage, that is related to *ReachZ1*, is based on the impedance Z_{RZ1} that has imaginary part X_{RZ1} and real part R_{RZ1} :

$$RRZ1 = \frac{\mathrm{Re}achZ1}{100} \times \frac{ForwardR}{100} \times ZBase = \frac{12}{100} \times \frac{8.19}{100} \times 0.9522 = 0.009\Omega$$

(Equation 5)

The magnitude of the impedance Z_{RZ1} is:

$$Z_{RZ1} = \sqrt{R_{RZ1}^2 + X_{RZ1}^2} = \sqrt{0.009^2 + 0.068^2} = 0.069\ \Omega$$

(Equation 6)

Hence the reference voltage of the test of the boundary between zone 1 and zone 2 is

$$V_{t,RZ1} = Z_{RZ1} \times I_t = 0.069 \times 20918 = 1435V$$

(Equation 7)

If the test voltage is lower than $V_{t,RZ1}$ (or in opposition), then the test is related to the zone 1; if the test voltage is higher than $V_{t,RZ1}$, then the test is related to the zone 2.

Considering the resistances and reactances which are related to the settings (*ForwardR*, *ForwardX*) and (*ReverseR*, *ReverseX*):

$$R_{FwdR} = \frac{ForwardR}{100} \times ZBase = \frac{8.19}{100} \times 0.9522 = 0.078\Omega$$

(Equation 8)

$$X_{FwdX} = \frac{ForwardX}{100} \times ZBase = \frac{59.33}{100} \times 0.9522 = 0.565\Omega$$

(Equation 9)

$$R_{RvsR} = \frac{ReverseR}{100} \times ZBase = \frac{0.29}{100} \times 0.9522 = 0.003\Omega$$

(Equation 10)

$$X_{RvsX} = \frac{ReverseR}{100} \times ZBase = \frac{29.6}{100} \times 0.9522 = 0.282\Omega$$

(Equation 11)

and the voltages that are related to them:

$$V_{t,FwdZ} = Z_{FwdZ} \times I_t = \sqrt{R^2_{FwdR} + X^2_{FwdX}} \times I_t = \sqrt{0.078^2 + 0.565^2} \times 20918 = 0.570 \times 20918 = 11931V$$

(Equation 12)

$$V_{t,RvsZ} = Z_{RvsZ} \times I_t = \sqrt{R^2_{RvsR} + X^2_{RvsX}} \times I_t = \sqrt{0.003^2 + 0.282^2} \times 20918 = 0.282 \times 20918 = 5899V$$

(Equation 13)

The previous calculations are in primary values. They are transferred to secondary values to perform injections by a test set. Primary values are transferred to secondary values by taking into account the CT ratio and the VT ratio (respectively 9000/1 A and 13.8/0.1 kV in the example).

The magnitude of the secondary voltages, that are related to the points RE and SE of the R-X plane, needs to be checked.

RE (R_{FwdR}, X_{FwdX}):

$$V_{t,FwdZs} = V_{t,FwdZ} \times \frac{V_{VT,s}}{V_{VT,p}} = 11931 \times \frac{0.1}{13.8} = 86.45V$$

(Equation 14)

SE (R_{RvsR}, X_{RvsX}):

$$V_{t,RvsZs} = V_{t,RvsZ} \times \frac{V_{VT,s}}{V_{VT,p}} = 5899 \times \frac{0.1}{13.8} = 42.75V$$

(Equation 15)

The tests, which are described in this section, may require voltages that have magnitude equal to 110% of the previous values. The continuous permissive overload voltage of the protection voltage channels of the TRM module is 420 V; so the previous voltages may be applied to the analog channels of the IED continuously. Limitations may be related to the available test set; the current I_t was calculated by using a factor 2.5 (instead of the maximum value 4) in order to reduce the magnitude of the test voltage for the points RE and SE.

Test sets usually do not have a feature to simulate a real network during a power swing and apply the related analog quantities at the terminal of the generator. The scope of the present test is not a simulation of a real network. Voltages and currents are supplied in order to measure an impedance that changes in the time and traverses the plane R-X and, in particular, the area inside the lens characteristic. The test may be performed by applying:

- Symmetric three-phase voltage at 50 Hz. The magnitude depends on the point of the characteristic that needs to be verified. The following three main points of the line segment SE-RE need to be checked:

- the point RE (R_{FwdR}, X_{FwdX})
- a point which is related to the parameter *ReachZ1* (boundary between zone 1 and zone 2)
- the point SE (R_{RvsR}, X_{RvsX})

The phase angle of the test voltages is equal to:

- arctan (*ForwardX*/*ForwardR*) for tests in the quadrant 1 and 2 of the R-X plane
- arctan (*ReverseX*/*ReverseR*) -180° for tests in the quadrant 3 and 4 of the R-X plane

- Symmetric three-phase current, where the current is the summation of two currents that have the same magnitude, but different frequencies.

$$I_{50} = I_{tf} = \frac{I_t}{2} = \frac{20918}{2} = 10459A$$

(Equation 16)

The first current I_{50} has frequency 50 Hz, magnitude 10459 A (that is, 1.162 A secondary) and phase angle 0º.
The second current I_{tf} has magnitude 10459 A (that is, 1.162 A secondary), phase angle 180º (at the starting time of the test) and frequency:

- 49.5 Hz for the test as generator in the quadrant 1 and 2 of the R-X plane
- 50.5 Hz for the test as generator in the quadrant 3 and 4 of the R-X plane

When the trajectory of the impedance, that is seen by the protection function, traverses the lens characteristic then a pole slipping is detected. The present procedure avoids tests of points of the line SE-RE that are too close to the R-axis because in that case the voltage is close to zero and, therefore, the impedance may approach a not defined quantity 0/0.

The accuracy of the impedance reach is ±2% of the base impedance; that is considered while evaluating the test results.

For the test as motor the frequency current may have 50.5 Hz in the quadrant 1 and 2 of the R-X plane and 49.5 Hz in the quadrant 3 and 4.

12.4.6.1 Verifying the settings by secondary injection

It is advised to connect the analog output channels of the function block OOSPPAM to the internal disturbance recorder (and in particular to the function block A4RADR) in order to perform a better analysis of the tests.

If the device is in test mode, the recording of the disturbances are enabled by the setting in **Main menu/Settings/IED Settings/Monitoring/Disturbance report/ DisturbanceReport/DRPRDRE:1:** set the parameter *OpModeTest* to *On*.

1. Check the Application Configuration: verify that hardware voltage and current channels of the IED are properly connected to SMAI function blocks, and that the proper analog outputs of SMAI's are connected to the analog inputs of the function block OOSPPAM.
2. Connect three-phase voltage channels of the test set to the appropriate IED terminals.
3. Connect in parallel two groups of three-phase currents of the test set to the appropriate IED terminals.
4. Connect the appropriate trip output of the IED to the input channel of the test set that monitors the trip.
5. Go to **Main menu/Settings/IED Settings/Impedance protection/ OutOfStep(78,Ucos)/OOSPPAM(78,Ucos):1**, and make sure that the function is enabled, that is, *Operation* is set to *On*.

12.4.7 Test of point RE (R_{FwdR}, X_{FwdX})

12.4.7.1 The trajectory of the impedance does not enter the lens characteristic.

Preliminary steady state test at 50 Hz

- Go to **Main menu/Test/Function status/Impedance protection/ OutOfStep(78,Ucos)/OOSPPAM(78,Ucos):1/Outputs** to check the available service values of the function block OOSPPAM.
- Apply the following three-phase symmetrical quantities (the phase angle is related to phase L1):

$$V_{ts} = 1.1 \times V_{t,FwdZ} \times \frac{V_{VT,s}}{V_{VT,p}} = 1.1 \times 11931 \times \frac{0.1}{13.8} = 95.1V$$

(Equation 17)

$$\angle V_{ts} = \arctan\left(\frac{ForwardX}{ForwardR}\right) = \arctan\left(\frac{59.33}{8.19}\right) = 82.14°$$

(Equation 18)

frequency of V_{ts} = 50 Hz

$$I_{50s} = I_{50} \times \frac{I_{CTs}}{I_{CTp}} = 10459 \times \frac{1}{9000} = 1.162\,A$$

(Equation 19)

$\angle I_{50s}=0°$
frequency of I_{50s} = 50 Hz

$$It_{fs} = It_{f} \times \frac{I_{CTs}}{I_{CTp}} = 10459 \times \frac{1}{9000} = 1.162\,A$$

(Equation 20)

$\angle I_{tfs}=0°$
frequency of I_{tfs} = 50 Hz

- Check that the service values (VOLTAGE, CURRENT, R(%), X(%)) are according to the injected quantities and that ROTORANG is close to 0 rad.
  For this particular injection the service values are:
  - VOLTAGE = 13.12 kV
  - CURRENT = 20918 A
  - R = 9.01%
  - X = 65.27%
  - ROTORANG = 0.04 rad

Note that these values identify a point outside the lens characteristic, even if it is close to the point RE. Neither START nor TRIP is issued.

Execution of the dynamic test

The test may be performed by using two states of a sequence tool that is a basic feature of test sets.

- State 1: pre-test condition.
  Steady voltage and current are applied in order to get a steady high impedance. This is a point in the plane R-X that is far away from the lens characteristic.
  Define the following three-phase symmetrical quantities (the phase angle is related to phase L1):

$$V_{ts} = 1.1 \times V_{t,FwdZ} \times \frac{V_{VT,s}}{V_{VT,p}} = 1.1 \times 11931 \times \frac{0.1}{13.8} = 95.1V$$

(Equation 21)

$$\angle V_{ts} = \arctan\left(\frac{ForwardX}{ForwardR}\right) = \arctan\left(\frac{59.33}{8.19}\right) = 82.14°$$

(Equation 22)

frequency of V_{ts} = 50 Hz

I_{50s}=0 A
I_{tfs}=0 A

- State 2: main test step.
  Define the following three-phase symmetrical quantities (the phase angle is related to phase L1):

$$V_{ts} = 1.1 \times V_{t,FwdZ} \times \frac{V_{VT,s}}{V_{VT,p}} = 1.1 \times 11931 \times \frac{0.1}{13.8} = 95.1V$$

(Equation 23)

$$\angle V_{ts} = \arctan\left(\frac{ForwardX}{ForwardR}\right) = \arctan\left(\frac{59.33}{8.19}\right) = 82.14°$$

(Equation 24)

frequency of V_{ts} = 50 Hz

$$I_{50s} = I_{50} \times \frac{I_{CTs}}{I_{CTp}} = 10459 \times \frac{1}{9000} = 1.162\,A$$

(Equation 25)

$\angle I_{50s}$ = 0º
frequency of I_{50s} = 50 Hz

$$It_{fs} = It_{f} \times \frac{I_{CTs}}{I_{CTp}} = 10459 \times \frac{1}{9000} = 1.162A$$

(Equation 26)

$\angle I_{tfs}$ = 180º
frequency of I_{tfs} = 49.5 Hz

Expected result: the protection function does not issue either start or trip.

12.4.7.2 The trajectory of the impedance traverses the lens characteristic in zone 2

Preliminary steady state test at 50 Hz

- Go to **Main menu/Test/Function status/Impedance protection/ OutOfStep(78,Ucos)/OOSPPAM(78,Ucos):1/Outputs** to check the available service values of the function block OOSPPAM.
- Apply the following three-phase symmetrical quantities (the phase angle is related to phase L1):

$$V_{ts} = 0.9 \times V_{t,FwdZ} \times \frac{V_{VT,s}}{V_{VT,p}} = 0.9 \times 11931 \times \frac{0.1}{13.8} = 77.81V$$

(Equation 27)

$$\angle V_{ts} = \arctan\left(\frac{ForwardX}{ForwardR}\right) = \arctan\left(\frac{59.33}{8.19}\right) = 82.14°$$

(Equation 28)

frequency of V_{ts} = 50 Hz

$$I_{50s} = I_{50} \times \frac{I_{CTs}}{I_{CTp}} = 10459 \times \frac{1}{9000} = 1.162\,A$$

(Equation 29)

$\angle I_{50s}$ = 0º
frequency of I_{50s} = 50 Hz

$$It_{fs} = It_{f} \times \frac{I_{CTs}}{I_{CTp}} = 10459 \times \frac{1}{9000} = 1.162A$$

(Equation 30)

$\angle I_{tfs}$ = 0º
frequency of I_{tf} = 50 Hz

- Check that the service values (VOLTAGE, CURRENT, R(%), X(%)) are according to the injected quantities and that ROTORANG is close to 3.14 rad. For this particular injection the service values are:
  - VOLTAGE = 10.74 kV
  - CURRENT = 20918 A
  - R = 7.37%
  - X = 53.40%
  - ROTORANG = -3.09 rad

  Note that these values identify a point inside the lens characteristic, in the zone 2, that is close to the point RE. The START is issued, but no TRIP is performed.

Execution of the dynamic test

The test may be performed by using two states of a sequence tool that is a basic feature of test sets.

- State 1: pre-test condition.
  Steady voltage and current are applied in order to get a steady high impedance, that is, a point in the plane R-X which is far away from the lens characteristic. Define the following three-phase symmetrical quantities (the phase angle is related to phase L1):

$$V_{ts} = 0.9 \times V_{t,FwdZ} \times \frac{V_{VT,s}}{V_{VT,p}} = 0.9 \times 11931 \times \frac{0.1}{13.8} = 77.81V$$

(Equation 31)

$$\angle V_{ts} = \arctan\left(\frac{ForwardX}{ForwardR}\right) = \arctan\left(\frac{59.33}{8.19}\right) = 82.14°$$

(Equation 32)

frequency of V_{ts} = 50 Hz
I_{50s} = 0 A
I_{tfs} = 0 A

- State 2: main test step.
  Define the following three-phase symmetrical quantities (the phase angle is related to phase L1):

$$V_{ts} = 0.9 \times V_{t,FwdZ} \times \frac{V_{VT,s}}{V_{VT,p}} = 0.9 \times 11931 \times \frac{0.1}{13.8} = 77.81V$$

(Equation 33)

$$\angle V_{ts} = \arctan\left(\frac{ForwardX}{ForwardR}\right) = \arctan\left(\frac{59.33}{8.19}\right) = 82.14°$$

(Equation 34)

frequency of V_{ts} = 50 Hz

$$I_{50s} = I_{50} \times \frac{I_{CTs}}{I_{CTp}} = 10459 \times \frac{1}{9000} = 1.162\,A$$

(Equation 35)

$\angle I_{50s}$ = 0º
frequency of I_{50s} = 50 Hz

$$It_{fs} = Itf \times \frac{I_{CTs}}{I_{CTp}} = 10459 \times \frac{1}{9000} = 1.162A$$

(Equation 36)

$\angle I_{tfs}$ = 180º
frequency of I_{tfs} = 49.5 Hz

Expected result: start of the protection function and trip in zone 2, when trip conditions are fulfilled.

12.4.8 Test of the boundary between zone 1 and zone 2, which is defined by the parameter *ReachZ1*

12.4.8.1 The trajectory of the impedance traverses the lens characteristic in zone 2

Preliminary steady state test at 50 Hz

- Go to **Main menu/Test/Function status/Impedance protection/ OutOfStep(78,Ucos)/OOSPPAM(78,Ucos):1/Outputs** to check the available service values of the function block OOSPPAM.
- Apply the following three-phase symmetrical quantities (the phase angle is related to phase L1):

$$V_{ts} = 1.1 \times V_{t,RZ1} \times \frac{V_{VT,s}}{V_{VT,p}} = 1.1 \times 1435 \times \frac{0.1}{13.8} = 11.44V$$

(Equation 37)

$$\angle V_{ts} = \arctan\left(\frac{ForwardX}{ForwardR}\right) = \arctan\left(\frac{59.33}{8.19}\right) = 82.14°$$

(Equation 38)

frequency of V_{ts} = 50 Hz

$$I_{50s} = I_{50} \times \frac{I_{CTs}}{I_{CTp}} = 10459 \times \frac{1}{9000} = 1.162\,A$$

(Equation 39)

$\angle I_{50s}$ = 0º
frequency of I_{50s} = 50 Hz

$$It_{fs} = It_{f} \times \frac{I_{CTs}}{I_{CTp}} = 10459 \times \frac{1}{9000} = 1.162A$$

(Equation 40)

$\angle I_{tfs}$ = 0º
frequency of I_{tfs} = 50 Hz

- Check that the service values (VOLTAGE, CURRENT, R(%), X(%)) are according to the injected quantities and that ROTORANG is close to 3.14 rad. For this particular injection the service values are:

- VOLTAGE = 1.58 kV
- CURRENT = 20918 A
- R = 1.08%
- X = 7.85%
- ROTORANG = -3.04 rad

Note that these values identify a point inside the lens characteristic, in the Zone 2, that is close to the boundary between zone 1 and zone 2. The START is issued, but no TRIP is performed.

Execution of the dynamic test

The test may be performed by using two states of a sequence tool that is a basic feature of test sets.

- State 1: pre-test condition.
  Steady voltage and current are applied in order to get a steady high impedance, that is a point in the plane R-X that is far away from the lens characteristic. Define the following three-phase symmetrical quantities (the phase angle is related to phase L1):

  $$V_{ts} = 1.1 \times V_{t,RZ1} \times \frac{V_{VT,s}}{V_{VT,p}} = 1.1 \times 1435 \times \frac{0.1}{13.8} = 11.44V$$

  (Equation 41)

  $$\angle V_{ts} = \arctan\left(\frac{ForwardX}{ForwardR}\right) = \arctan\left(\frac{59.33}{8.19}\right) = 82.14°$$

  (Equation 42)

  frequency of V_t= 50 Hz.
  I_{50s} = 0 A
  I_{tfs} = 0 A

- State 2: main test step.
  Define the following three-phase symmetrical quantities (the phase angle is related to phase L1):

  $$V_{ts} = 1.1 \times V_{t,RZ1} \times \frac{V_{VT,s}}{V_{VT,p}} = 1.1 \times 1435 \times \frac{0.1}{13.8} = 11.44V$$

  (Equation 43)

  $$\angle V_{ts} = \arctan\left(\frac{ForwardX}{ForwardR}\right) = \arctan\left(\frac{59.33}{8.19}\right) = 82.14°$$

  (Equation 44)

  frequency of V_t = 50 Hz

$$I_{50s} = I_{50} \times \frac{I_{CTs}}{I_{CTp}} = 10459 \times \frac{1}{9000} = 1.162\,A$$

(Equation 45)

$\angle I_{50s} = 0°$
frequency of I_{50s} = 50 Hz

$$It_{fs} = It_{f} \times \frac{I_{CTs}}{I_{CTp}} = 10459 \times \frac{1}{9000} = 1.162\,A$$

(Equation 46)

$\angle I_{tfs} = 180°$
frequency of I_{tfs} = 49.5 Hz

Expected result: start of the protection function and trip in zone 2 when trip conditions are fulfilled.

12.4.8.2 The trajectory of the impedance traverses the lens characteristic in zone 1

Preliminary steady state test at 50 Hz

- Go to **Main menu/Test/Function status/Impedance protection/ OutOfStep(78,Ucos)/OOSPPAM(78,Ucos):1/Outputs** to check the available service values of the function block OOSPPAM.
- Apply the following three-phase symmetrical quantities (the phase angle is related to phase L1):

$$V_{ts} = 0.9 \times V_{t,RZ1} \times \frac{V_{VT,s}}{V_{VT,p}} = 0.9 \times 1435 \times \frac{0.1}{13.8} = 9.36V$$

(Equation 47)

$$\angle V_{ts} = \arctan\left(\frac{ForwardX}{ForwardR}\right) = \arctan\left(\frac{59.33}{8.19}\right) = 82.14°$$

(Equation 48)

frequency of V_{ts} = 50 Hz

$$I_{50s} = I_{50} \times \frac{I_{CTs}}{I_{CTp}} = 10459 \times \frac{1}{9000} = 1.162\,A$$

(Equation 49)

$\angle I_{50s} = 0°$
frequency of I_{50s} = 50 Hz

$$It_{fs} = It_f \times \frac{I_{CTs}}{I_{CTp}} = 10459 \times \frac{1}{9000} = 1.162A$$

(Equation 50)

$\angle I_{tfs} = 0°$
frequency of $I_{tf} = 50$ Hz

- Check that the service values (VOLTAGE, CURRENT, R(%), X(%)) are according to the injected quantities and that ROTORANG is close to 3.14 rad. For this particular injection the service values are:
  - VOLTAGE = 1.29 kV
  - CURRENT = 20918 A
  - R = 0.89%
  - X=6.42%
  - ROTORANG = -3.04 rad

  Note that these values identify a point inside the lens characteristic in zone 1, that is close to the boundary between zone 1 and zone 2. The START is issued, but no TRIP is performed.

Execution of the dynamic test

The test may be performed by using two states of a sequence tool that is a basic feature of test sets.

- State 1: pre-test condition.
  Steady voltage and current are applied in order to get a steady high impedance, that is a point in the plane R-X which is far away from the lens characteristic. Define the following three-phase symmetrical quantities (the phase angle is related to phase L1):

$$V_{ts} = 0.9 \times V_{t,RZ1} \times \frac{V_{VT,s}}{V_{VT,p}} = 0.9 \times 1435 \times \frac{0.1}{13.8} = 9.36V$$

(Equation 51)

$$\angle V_{ts} = \arctan\left(\frac{ForwardX}{ForwardR}\right) = \arctan\left(\frac{59.33}{8.19}\right) = 82.14°$$

(Equation 52)

frequency of $V_{ts} = 50$ Hz
$I_{50s} = 0$ A
$I_{tfs} = 0$ A

- State 2: main test step.
  Define the following three-phase symmetrical quantities (the phase angle is related to phase L1):

$$V_{ts} = 0.9 \times V_{t,RZ1} \times \frac{V_{VT,s}}{V_{VT,p}} = 0.9 \times 1435 \times \frac{0.1}{13.8} = 9.36V$$

(Equation 53)

$$\angle V_{ts} = \arctan\left(\frac{ForwardX}{ForwardR}\right) = \arctan\left(\frac{59.33}{8.19}\right) = 82.14°$$

(Equation 54)

frequency of V_{ts} = 50 Hz

$$I_{50s} = I_{50} \times \frac{I_{CTs}}{I_{CTp}} = 10459 \times \frac{1}{9000} = 1.162\,A$$

(Equation 55)

$\angle I_{50s}$ = 0º
frequency of I_{50s} = 50 Hz

$$It_{fs} = It_{f} \times \frac{I_{CTs}}{I_{CTp}} = 10459 \times \frac{1}{9000} = 1.162A$$

(Equation 56)

$\angle I_{tfs}$ = 180º
frequency of I_{tfs} = 49.5 Hz

Expected result: start of the protection function and trip in zone 1 when trip conditions are fulfilled.

12.4.9 Test of the point SE (R_{RvsR}, X_{RvsX})

12.4.9.1 The trajectory of the impedance traverses the lens characteristic in zone 1

Preliminary steady state test at 50 Hz

- Go to **Main menu/Test/Function status/Impedance protection/ OutOfStep(78,Ucos)/OOSPPAM(78,Ucos):1/Outputs** to check the available service values of the function block OOSPPAM.
- Apply the following three-phase symmetrical quantities (the phase angle is related to phase L1):

$$V_{ts} = 0.9 \times V_{t,RvsZ} \times \frac{V_{VT,s}}{V_{VT,p}} = 0.9 \times 5899 \times \frac{0.1}{13.8} = 38.47V$$

(Equation 57)

$$\angle V_{ts} = \arctan\left(\frac{ReverseX}{ReverseR}\right) - 180° = \arctan\left(\frac{29.60}{0.29}\right) - 180° = -90.56°$$

(Equation 58)

frequency of V_{ts} = 50 Hz

$$I_{50s} = I_{50} \times \frac{I_{CTs}}{I_{CTp}} = 10459 \times \frac{1}{9000} = 1.162\,A$$

(Equation 59)

$\angle I_{50s}$ = 0º
frequency of I_{50s} = 50 Hz

$$It_{fs} = It_{f} \times \frac{I_{CTs}}{I_{CTp}} = 10459 \times \frac{1}{9000} = 1.162A$$

(Equation 60)

$\angle I_{tfs}$ = 0º
frequency of I_{tf} = 50 Hz

- Check that the service values (VOLTAGE, CURRENT, R(%), X(%)) are according to the injected quantities and that ROTORANG is close to 3.14 rad. For this particular injection the service values are:
  - VOLTAGE = 5.31 kV
  - CURRENT = 20918 A
  - R = -0.26%
  - X = -26.65%
  - ROTORANG = -3.06 rad

  Note that these values identify a point inside the lens characteristic in zone 1 that is close to the point SE. The START is issued, but no TRIP is performed.

Execution of the dynamic test

The test may be performed by using two states of a sequence tool that is a basic feature of test sets.

- State 1: pre-test condition.
  Steady voltage and current are applied in order to get a steady high impedance, that is a point in the plane R-X which is far away from the lens characteristic.
  Define the following three-phase symmetrical quantities (the phase angle is related to phase L1):

$$V_{ts} = 0.9 \times V_{t,RvsZ} \times \frac{V_{VT,s}}{V_{VT,p}} = 0.9 \times 5899 \times \frac{0.1}{13.8} = 38.47V$$

(Equation 61)

$$\angle V_{ts} = \arctan\left(\frac{ReverseX}{ReverseR}\right) - 180° = \arctan\left(\frac{29.60}{0.29}\right) - 180° = -90.56°$$

(Equation 62)

frequency of V_{ts} = 50 Hz
I_{50s} = 0 A
I_{tfs} = 0 A

- State 2: main test step.
  Define the following three-phase symmetrical quantities (the phase angle is related to phase L1):

$$V_{ts} = 0.9 \times V_{t,RvsZ} \times \frac{V_{VT,s}}{V_{VT,p}} = 0.9 \times 5899 \times \frac{0.1}{13.8} = 38.47V$$

(Equation 63)

$$\angle V_{ts} = \arctan\left(\frac{ReverseX}{ReverseR}\right) - 180° = \arctan\left(\frac{29.60}{0.29}\right) - 180° = -90.56°$$

(Equation 64)

frequency of V_{ts} = 50 Hz

$$I_{50s} = I_{50} \times \frac{I_{CTs}}{I_{CTp}} = 10459 \times \frac{1}{9000} = 1.162\,A$$

(Equation 65)

$\angle I_{50s}$ = 0º
frequency of I_{50s} = 50 Hz

$$It_{fs} = It_{f} \times \frac{I_{CTs}}{I_{CTp}} = 10459 \times \frac{1}{9000} = 1.162A$$

(Equation 66)

$\angle I_{tfs}$ = 180º
frequency of I_{tfs} = 50.5 Hz

Expected result: start of the protection function and trip in zone 1 when trip conditions are fulfilled.

12.4.9.2 The trajectory of the impedance does not enter the lens characteristic

Preliminary steady state test at 50 Hz

- Go to **Main menu/Test/Function status/Impedance protection/ OutOfStep(78,Ucos)/OOSPPAM(78,Ucos):1/Outputs** to check the available service values of the function block OOSPPAM.
- Apply the following three-phase symmetrical quantities (the phase angle is related to phase L1):

$$V_{ts} = 1.1 \times V_{t,RvsZ} \times \frac{V_{VT,s}}{V_{VT,p}} = 1.1 \times 5899 \times \frac{0.1}{13.8} = 47.02V$$

(Equation 67)

$$\angle V_{ts} = \arctan\left(\frac{ReverseX}{ReverseR}\right) - 180° = \arctan\left(\frac{29.60}{0.29}\right) - 180° = -90.56°$$

(Equation 68)

frequency of V_{ts} = 50 Hz

$$I_{50s} = I_{50} \times \frac{I_{CTs}}{I_{CTp}} = 10459 \times \frac{1}{9000} = 1.162\,A$$

(Equation 69)

$\angle I_{50s}$ = 0º
frequency of I_{50s} = 50 Hz

$$It_{fs} = It_{f} \times \frac{I_{CTs}}{I_{CTp}} = 10459 \times \frac{1}{9000} = 1.162A$$

(Equation 70)

$\angle I_{tfs}$ = 0º
frequency of I_{tf} = 50 Hz

- Check that the service values (VOLTAGE, CURRENT, R(%), X(%)) are according to the injected quantities and that ROTORANG is close to 0 rad. For this particular injection the service values are:
  - VOLTAGE= 6.49 kV
  - CURRENT= 20918 A
  - R= –0.32%
  - X=–32.57%
  - ROTORANG= 0.08 rad

  Note that these values identify a point outside the lens characteristic, even if it is close to the point SE. Neither START nor TRIP is issued.

Execution of the dynamic test

The test may be performed by using two states of a sequence tool that is a basic feature of test sets.

- State 1: pre-test condition.
  Steady voltage and current are applied in order to get a steady high impedance, that is, a point in the plane R-X which is far away from the lens characteristic.
  Define the following three-phase symmetrical quantities (the phase angle is related to phase L1):

$$V_{ts} = 1.1 \times V_{t,RvsZ} \times \frac{V_{VT,s}}{V_{VT,p}} = 1.1 \times 5899 \times \frac{0.1}{13.8} = 47.02V$$

(Equation 71)

$$\angle V_{ts} = \arctan\left(\frac{ReverseX}{ReverseR}\right) - 180° = \arctan\left(\frac{29.60}{0.29}\right) - 180° = -90.56°$$

(Equation 72)

  frequency of V_{ts} = 50 Hz
  I_{50s} = 0 A
  I_{tfs} = 0 A

- State 2: main test step.
  Define the following three-phase symmetrical quantities (the phase angle is related to phase L1):

$$V_{ts} = 1.1 \times V_{t,RvsZ} \times \frac{V_{VT,s}}{V_{VT,p}} = 1.1 \times 5899 \times \frac{0.1}{13.8} = 47.02V$$

(Equation 73)

$$\angle V_{ts} = \arctan\left(\frac{ReverseX}{ReverseR}\right) - 180° = \arctan\left(\frac{29.60}{0.29}\right) - 180° = -90.56°$$

(Equation 74)

  frequency of V_{ts} = 50 Hz

$$I_{50s} = I_{50} \times \frac{I_{CTs}}{I_{CTp}} = 10459 \times \frac{1}{9000} = 1.162\,A$$

(Equation 75)

  $\angle I_{50s}$ = 0º
  frequency of I_{50s} = 50 Hz

$$It_{fs} = It_{f} \times \frac{I_{CTs}}{I_{CTp}} = 10459 \times \frac{1}{9000} = 1.162A$$

(Equation 76)

$\angle I_{tfs} = 180^o$
frequency of $I_{tfs} = 50.5$ Hz

Expected result: the protection function does not issue either start or trip.

After each test it is possible to download and study the related disturbance recording.

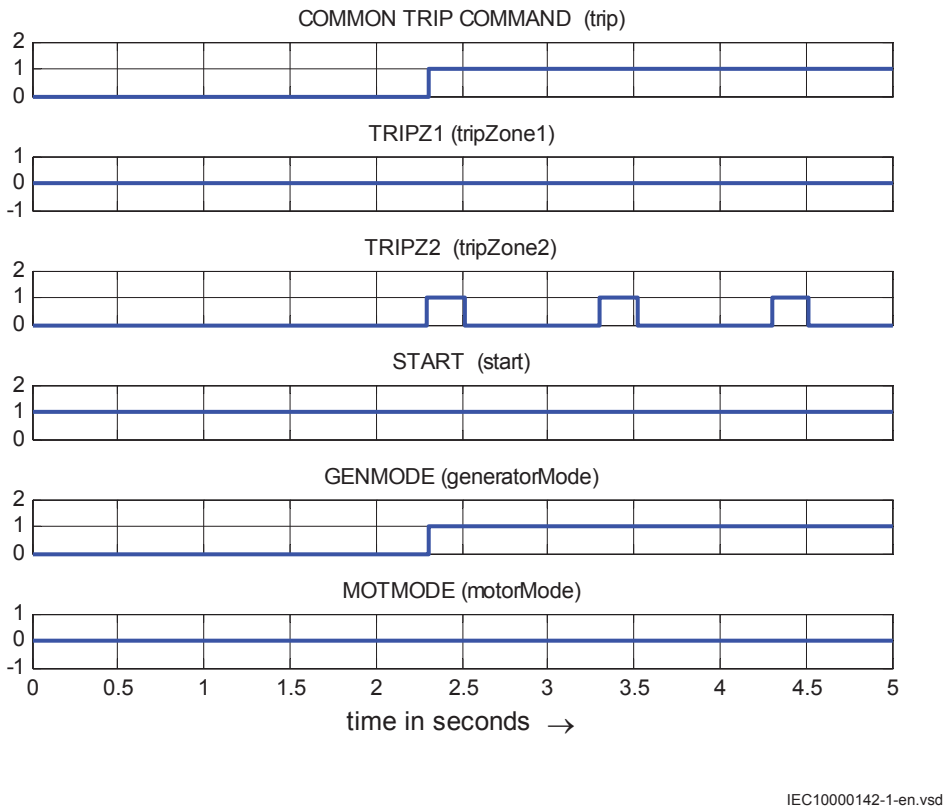

Figure 38: Boolean output signals for the injected current with two components: a 50 Hz current component and a 49.5 Hz current component

12.4.10 Loss of excitation LEXPDIS (40)

Prepare the IED for verification of settings outlined in section "Preparing the IED to verify settings".

12.4.10.1 Verifying the settings

The test is done by means of injection of three phase current and three phase voltage from a modern test device. This test device shall be able to give voltage and current corresponding to the set apparent impedance.

1. Feed the IED with current and voltage corresponding to the apparent impedance: Test #1, as shown in figure 39. Read the analog outputs for R and X and check that this reading corresponds to the injected impedance. No pickup or trip signals shall be activated.
2. Feed the IED with current and voltage corresponding to the apparent impedance: Test #2, as shown in figure 39. Read the analog outputs for R and X and check that this reading corresponds to the injected impedance. No pickup or trip signals shall be activated.
3. Feed the IED with current and voltage corresponding to the apparent impedance: Test #3, as shown in figure 39. Read the analog outputs for R and X and check that this reading corresponds to the injected impedance. The signals PICKUP and PU_Z2 shall be activated instantaneously and the signals TRIP and TRZ2 shall be activated after the set delay *tZ2*.
4. Switch the current infeed injection off. The function shall reset. Turn the current on with the values corresponding to Test #3 and measure the time to activation of signal TRZ2. This time shall be compared to *tZ2*.
5. Feed the IED with current and voltage corresponding to the apparent impedance: Test #4, as shown in figure 39. Read the analog outputs for R and X and check that this reading corresponds to the injected impedance. The signals PICkUP, PU_Z2 and PU_Z1 shall be activated instantaneously and the signals TRIP, TRZ2 and TRZ1 shall be activated after the different set time delays.
6. Switch the current infeed injection off. The function shall reset. Turn the current on with the values corresponding to Test #4 and measure the time to activation of signal TRZ1. This time shall be compared to *tZ1*.

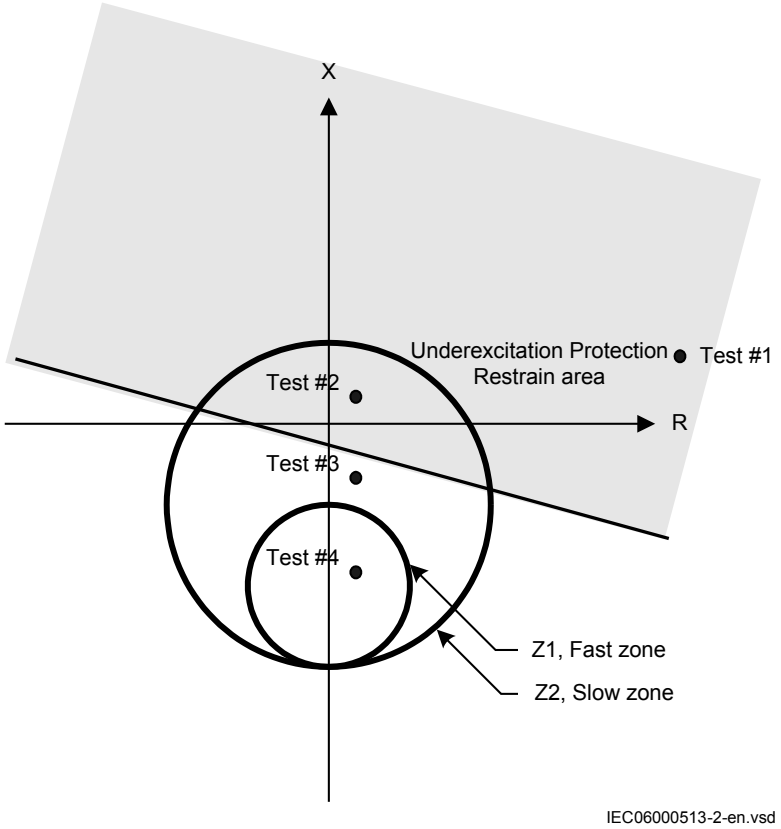

Figure 39: Testing current and voltage corresponding to the apparent impedance

12.4.10.2 Completing the test

Continue to test another function or end the test by changing the *TestMode* setting to *Disabled*. Restore connections and settings to their original values, if they were changed for testing purposes.

12.4.11 Under impedance protection for Generator ZGVPDIS

Prepare the IED for verification of settings.

Values of the logical signals for ZGVPDIS are available on the local HMI under **Main menu/Tests/Function status/Impedance/ZGVPDIS (21G, Z<)/ 1:ZGVPDIS:ZGVPDIS**. The Signal Monitoring in PCM600 shows the same signals that are available on the local HMI.

12.4.11.1 Verifying the settings

Distance protection zones

While measuring operating characteristics, keep the current constant. Keep the current as close as possible to its rated value or lower, however make sure it is higher than 30% of the rated current.

If the measurement of the operating characteristics runs under constant voltage conditions, ensure that the maximum continuous current in an IED does not exceed four times its rated value.

To verify the zone 1 mho characteristic, at least two points must be tested.

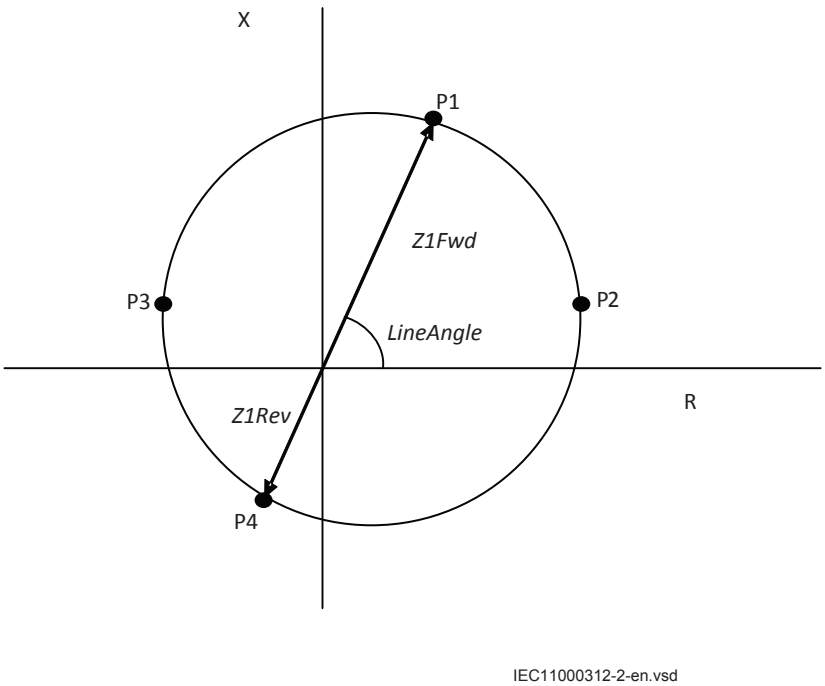

Figure 40: Proposed four test points for phase-to-phase fault

Where,

Z1Fwd	is the forward positive sequence impedance setting for zone 1
Z1Rev	is the reverse positive sequence impedance setting for zone 1
LineAngle	is the Impedance angle for phase-to-phase fault in degrees

Test points	X	R
P1	*Z1Fwd* · sin(*LineAngle*)	*Z1Fwd* · cos(*LineAngle*)
P2	((*Z1Fwd* -*Z1Rev* / 2) · sin(*LineAngle*))	*Z1Fwd* / 2 · (1 + cos(*LineAngle*) + *Z1Rev* / 2 · (1 – cos(*LineAngle*))
P3	((*Z1Fwd* -*Z1Rev* / 2) · sin(*LineAngle*))	-*Z1Fwd* / 2 · (1 – cos(*LineAngle*) + *Z1Rev* / 2 · (1 + cos(*LineAngle*))
P4	-*Z1Rev* · sin*LineAngle*	-*Z1Rev* · cos(*LineAngle*)

Change the magnitude and angle of phase-to-phase voltage, to achieve impedances at test points P1, P2, P3 and P4. For each test point, observe that the output signals, PICKUP and PU_Z1 are activated where x refers to the actual phase to be tested. After the trip time delay for the zone 1 has elapsed, the signals TRIP and TRZ1 shall be activated.

To verify zone 2 and zone 3 mho characteristic, at least two points must be tested. The default measuring loop selected is maximum current phase to current loop. Hence the below characteristics are tested with phase–to-ground fault conditions.

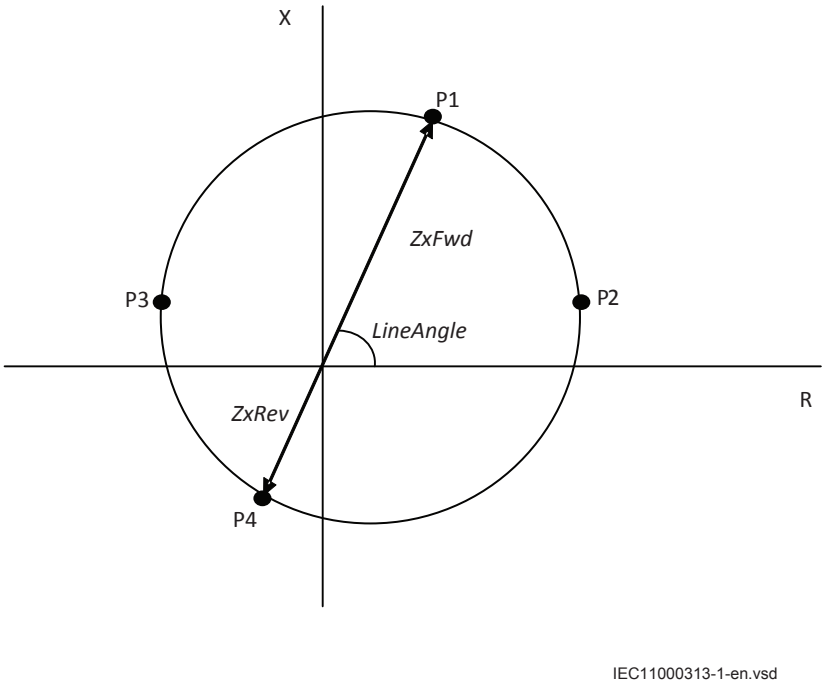

Figure 41: Proposed four test points for phase-to-earth fault

Where,

ZxFwd	is the forward positive sequence impedance setting for zone x (where, x is 2- 3 depending on the zone selected)
ZxRev	is the reverse positive sequence impedance setting for zone x (where x is 2- 3 depending on the zone selected)
LineAngle	is the Impedance angle for phase-to-phase fault in degrees

Test points	X	R
P1	*ZxFwd* · sin(*LineAngle*)	*ZxFwd* · cos(*LineAngle*)
P2	((*ZxFwd* -*ZxRev* / 2) · sin(*LineAngle*))	*ZxFwd* / 2 · (1 + cos(*LineAngle*) + *ZxRev*/2 · (1 – cos(*LineAngle*))
P3	((*ZxFwd* -*ZxRev* / 2) · sin(*LineAngle*))	-*ZxFwd* / 2 · (1 – cos(*LineAngle*) + *ZxRev* / 2 · (1 + cos(*LineAngle*))
P4	-*ZxRev* · sin(*LineAngle*)	-*ZxRev* · cos(*LineAngle*)

Change the magnitude and angle of phase-to-phase voltage to achieve impedances at test points P1, P2, P3 and P4. For each test point, observe that the output signals, PICKUP and PU_Zx are activated (where x is 2 or 3 depending on selected zone). After the trip time delay of the respective zone has elapsed, also the signals TRIP and TRZx (where x is 2 or 3 depending on selected zone) shall be activated.

Load encroachment

Load encroachment operates on the same measuring principles as the impedance measuring zones. Thus, it is necessary to follow the same principles as for distance protection when performing the secondary injection tests. Measure operating characteristics during constant current conditions. Keep the injected current as close as possible to the rated value of its associated input transformer or lower. Ensure, however, that it is higher than 30% of the rated current. Ensure that the maximum continuous current of an IED does not exceed four times Its rated value, if the measurement of the operating characteristics runs under constant voltage conditions.

Measuring the operate limit of set values of load encroachment function

The load encroachment does not have any special output to be verified. It can only be verified with the distance PICKUP and TRIP outputs.

Steps to test the load encroachment:

1. Supply the IED with healthy conditions for at least two seconds.
2. Apply the fault condition and slowly decrease the injected impedance to find the trip value for of the phase-to-ground and phase-to-phase loops.

Under voltage seal-in

The under voltage seal-in logic can be verified using the 27 Trip and 27 PU outputs.

Steps to verify the logic:

1. Keep all the current and voltage in normal balanced condition.
2. Keeping the phase current at rated value, slowly reduce the voltage till it enters into the respective zone mho characteristics and also below the set value of the under voltage seal-in logic.
3. Before the trip time delay of the respective zone, reduce the current magnitude so that the operating impedance moves out of the mho characteristics.
4. The under voltage seal-in should give a PICKUP and TRIP after the trip time delay is set for the under voltage logic.

12.4.11.2 Completing the test

Continue to test another function or end the testing by setting the parameter *TestMode* to *Disabled* under **Main menu/Tests/IED test mode/1: TESTMODE**. If another function is tested, then set the parameter *Blocked* to *No* under **Main menu/Tests/ Function test modes/Impedance/ZGVPDIS/1: ZGVPDIS** for the function, or for each individual function in a chain, to be tested next. Remember to set the parameter *Blocked* to *Yes*, for each individual function that has been tested.

12.4.12 Rotor earth fault protection with RXTTE4 and general current and voltage protection CVGAPC

Prepare the IED for verification of settings as outlined in section "Requirements" and section "Preparing for test" in this chapter.

12.4.12.1 Testing

The protection function uses injection of an ac voltage to the generator field circuit. The COMBIFLEX voltage injection unit RXTTE4, Part No 1MRK 002 108-AB contains a voltage transformer with a primary winding for connection to 120 or 230 V, 50 or 60 Hz supply voltage. From the secondary winding of this internal voltage transformer approximately 40 V AC is injected via series capacitors and resistors into the rotor circuit. The injected voltage is fed to a voltage input of the REG670 IED. The current caused by the injection is fed to a current input of the REG670 IED via a current transformer, which is amplifying the current ten times, as shown in figure 42.

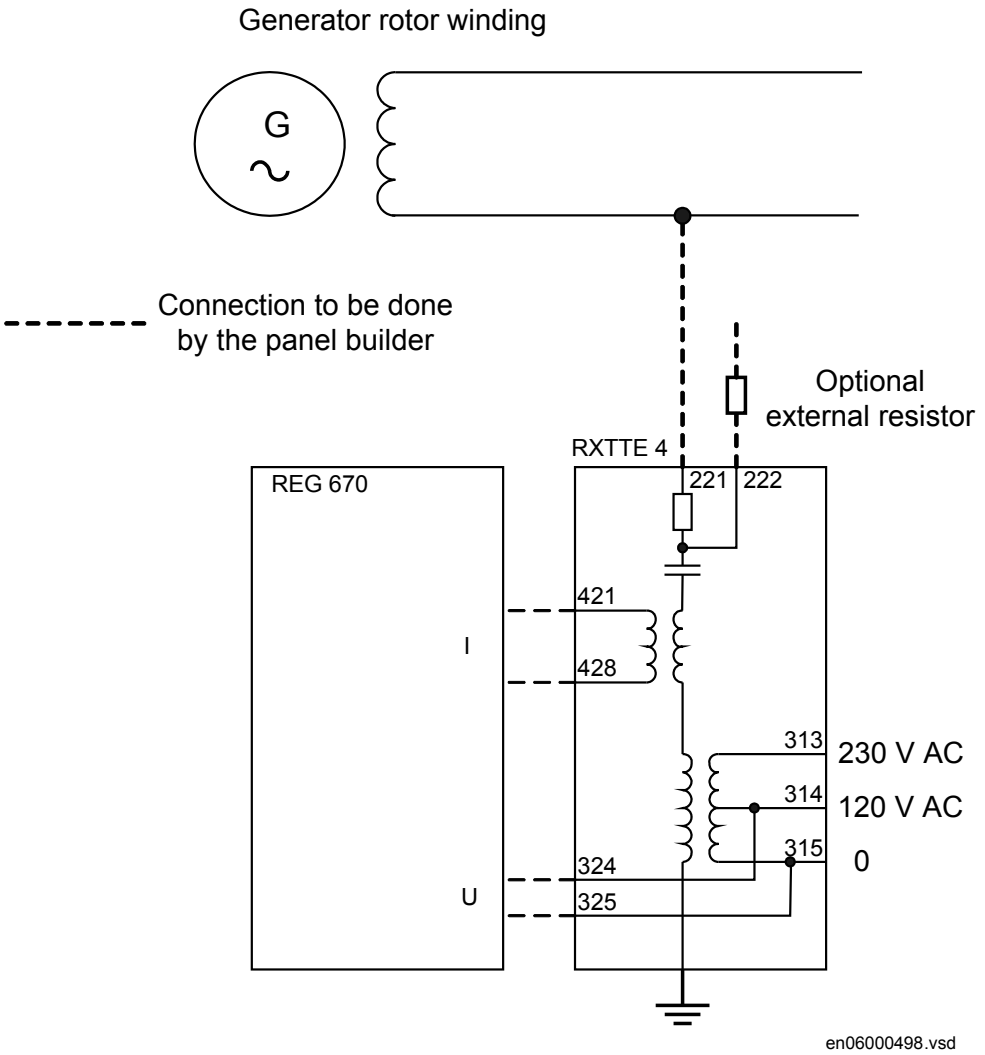

Figure 42: Ten times amplification of current via a current transformer

The test described in steps 1 to 6 can be done with the generator at stand-still situations.

Procedure

1. The test should be prepared with a switch connected between the output of RXTTE4 (221) and the station earth. Initially this switch is open.
2. First the 120 (230) V input to RXTTE4 is disconnected. This should give a signal from REG670 that the injection voltage is low.
3. Reconnect the 120 (230) V input and check that the low injection voltage signal resets.

4. Close the switch to the station earth and check that the trip from the rotor earth fault will be given after the set delay time.
5. Open the switch to the station earth and check that the trip signal resets instantaneously.
6. Connect an adjustable resistor to the field circuit (221 on RXTTE4). Decrease this resistor from a large value until the function operates and check monitored value *ICOSFI*.
   When the generator has been started the service value of injection voltage and injection current shall be checked so that there is no risk for unwanted trip due to large capacitive detected current.

12.4.12.2 Completing the test

Continue to test another function or end the test by changing the *TestMode* setting to *Disabled*. Restore connections and settings to their original values, if they were changed for testing purposes.

12.5 Current protection

12.5.1 Instantaneous phase overcurrent protection 3-phase output PHPIOC (50)

Prepare the IED for verification of settings outlined in section "Preparing the IED to verify settings".

To verify the settings the following fault type should be tested:

- Phase-to-ground fault

Ensure that the maximum continuous current, supplied from the current source used for the test of the IED, does not exceed four times the rated current value of the IED.

12.5.1.1 Measuring the operate limit of set values

1. Inject a phase current into the IED with an initial value below that of the setting.
2. Set the operation mode to *1 out of 3*.
3. Increase the injected current in the Ln phase until the TR_A (TR_B or TR_C) signal appears.
4. Switch the fault current off.

Observe: Do not exceed the maximum permitted overloading of the current circuits in the IED.

5. Compare the measured operating current with the set value.
6. Set the operation mode to *2 out of 3* and inject current into one of the phases. Check - no operation.

12.5.1.2 Completing the test

Continue to test another function or end the test by changing the *TestMode* setting to *Disabled*. Restore connections and settings to their original values, if they were changed for testing purposes.

12.5.2 Four step phase overcurrent protection 3-phase output OC4PTOC (51_67)

Prepare the IED for verification of settings outlined in section "Preparing the IED to verify settings".

12.5.2.1 Verifying the settings

1. Connect the test set for current injection to the appropriate IED phases.
   If there is any configuration logic that is used to enable or block any of the four available overcurrent steps, make sure that the step under test is enabled (for example, end fault protection).
   If *1 out of 3* currents for operation is chosen: Connect the injection current to phases A and neutral.
   If *2 out of 3* currents for operation is chosen: Connect the injection current into phase A and out from phase B.
   If *3 out of 3* currents for operation is chosen: Connect the symmetrical three-phase injection current into phases A, B and C.
2. Connect the test set for the appropriate three-phase voltage injection to the IED phases A, B and C. The protection shall be fed with a symmetrical three-phase voltage.
3. Set the injected polarizing voltage slightly larger than the set minimum polarizing voltage (default is 5% of *VBase*) and set the injection current to lag the appropriate voltage by an angle of about 80° if forward directional function is selected.
   If *1 out of 3* currents for operation is chosen: The voltage angle of phase A is the reference.

If *2 out of 3* currents for operation is chosen: The voltage angle of phase A – the voltage angle of B is the reference.
If *3 out of 3* currents for operation is chosen: The voltage angle of phase A is the reference.
If reverse directional function is selected, set the injection current to lag the polarizing voltage by an angle equal to 260° (equal to 80° + 180°).

4. Increase the injected current and note the trip value of the tested step of the function.
5. Decrease the current slowly and note the reset value.
6. If the test has been performed by injection of current in phase A, repeat the test, injecting current into phases B and C with polarizing voltage connected to phases B, respectively C (*1 out of 3* currents for operation).
7. If the test has been performed by injection of current in phases AB, repeat the test, injecting current into phases BC and CA with the appropriate phase angle of injected currents.
8. Block higher set stages when testing lower set stages by following the procedure described below.
9. Connect a trip output contact to a timer.
10. Set the injected current to 200% of the operate level of the tested stage, switch on the current and check the time delay.
    For inverse time curves, check the trip time at a current equal to 110% of the trip current for *txMin*.
11. Check that all trip and pickup contacts operate according to the configuration (signal matrixes)
12. Reverse the direction of the injected current and check that the protection does not operate.
13. If *2 out of 3* or *3 out of 3* currents for operation is chosen: Check that the function will not trip with current in one phase only.
14. Repeat the above described tests for the higher set stages.
15. Finally check that pickup and trip information is stored in the event menu.

Verification of the non-directional phase overcurrent function is done as instructed above, without applying any polarizing voltage.

12.5.2.2 Completing the test

Continue to test another function or end the test by changing the *TestMode* setting to *Disabled*. Restore connections and settings to their original values, if they were changed for testing purposes.

12.5.3 Instantaneous residual overcurrent protection EFPIOC (50N)

Prepare the IED for verification of settings outlined in section "Preparing the IED to verify settings".

To verify the settings the following fault type should be tested:

- Phase-to-ground fault

Ensure that the maximum continuous current, supplied from the current source used for the test of the IED, does not exceed four times the rated current value of the IED.

12.5.3.1 Measuring the operate limit of set values

1. Inject a phase current into the IED with an initial value below that of the setting.
2. Increase the injected current in the Ln or in the neutral (summated current input) phase until the TRIP signal appears.
3. Disable the fault current
   Observe to not exceed the maximum permitted overloading of the current circuits in the IED.
4. Compare the measured operating current with the set value.

12.5.3.2 Completing the test

Continue to test another function or end the test by changing the *TestMode* setting to *Disabled*. Restore connections and settings to their original values, if they were changed for testing purposes.

12.5.4 Four step residual overcurrent protection, (Zero sequence or negative sequence directionality) EF4PTOC (51N/67N)

Prepare the IED for verification of settings outlined in section "Preparing the IED to verify settings".

12.5.4.1 Four step directional ground fault protection

1. Connect the test set for single current injection to the appropriate IED terminals. Connect the injection current to terminals A and neutral.
2. Set the injected polarizing voltage slightly larger than the set minimum polarizing voltage (default 5% of Vn) and set the injection current to lag the voltage by an

angle equal to the set reference characteristic angle (*AngleRCA*), if the forward directional function is selected.
If reverse directional function is selected, set the injection current to lag the polarizing voltage by an angle equal to RCA+ 180°.

3. Increase the injected current and note the value at which the studied step of the function operates.
4. Decrease the current slowly and note the reset value.
5. If the test has been performed by injection of current in phase A, repeat the test, injecting current into terminals B and C with a polarizing voltage connected to terminals B, respectively C.
6. Block lower set steps when testing higher set steps according to the instructions that follow.
7. Connect a trip output contact to a timer.
8. Set the injected current to 200% of the operate level of the tested step, switch on the current and check the time delay.
   For inverse time curves, check the operate time at a current equal to 110% of the operate current for *txMin*.
9. Check that all trip and trip contacts operate according to the configuration (signal matrixes)
10. Reverse the direction of the injected current and check that the step does not operate.
11. Check that the protection does not operate when the polarizing voltage is zero.
12. Repeat the above described tests for the higher set steps.
13. Finally, check that pickup and trip information is stored in the event menu.

12.5.4.2 Four step non-directional ground fault protection

1. Do as described in "Four step directional ground fault protection", but without applying any polarizing voltage.

12.5.4.3 Completing the test

Continue to test another function or end the test by changing the *TestMode* setting to *Disabled*. Restore connections and settings to their original values, if they were changed for testing purposes.

12.5.5 Four step negative sequence overcurrent protection NS4PTOC (46I2)

Prepare the IED for verification of settings as outlined in section "Requirements" and section "Preparing for test" in this chapter.

When inverse time overcurrent characteristic is selected, the operate time of the stage will be the sum of the inverse time delay and the set definite time delay. Thus, if only the inverse time delay is required, it is of utmost importance to set the definite time delay for that stage to zero.

Procedure

1. Connect the test set for injection of three-phase currents and voltages to the appropriate CT and VT inputs of the IED.
2. Inject pure negative sequence current, that is, phase currents with exactly same magnitude, reversed sequence and exactly 120° phase displaced into the IED with an initial value below negative sequence current pickup level. No output signals should be activated. Check under NS4PTOC function Service Values that correct I2 magnitude is measured by the function.
3. Set the injected negative sequence polarizing voltage slightly larger than the set minimum polarizing voltage (default 5 % of Vn) and set the injection current to lag the voltage by an angle equal to the set reference characteristic angle (*180° - AngleRCA*) if the forward directional function is selected.
   If reverse directional function is selected, set the injection current to lag the polarizing voltage by an angle equal to RCA.
4. Increase the injected current and note the value at which the studied step of the function operates.
5. Decrease the current slowly and note the reset value.
6. Block lower set steps when testing higher set steps according to the instructions that follow.
7. Connect a trip output contact to a timer.
8. Set the injected current to 200% of the operate level of the tested step, switch on the current and check the time delay.
   For inverse time curves, check the operate time at a current equal to 110% of the operate current in order to test parameter *txmin*.
9. Check that all trip and pickup contacts operate according to the configuration (signal matrixes)
10. Reverse the direction of the injected current and check that the step does not operate.
11. Check that the protection does not operate when the polarizing voltage is zero.
12. Repeat the above-described tests for the higher set steps.
13. Finally, check that pickup and trip information is stored in the event menu.

12.5.5.1 Completing the test

Continue to test another function or end the test by changing the *TestMode* setting to *Disabled*. Restore connections and settings to their original values, if they were changed for testing purposes.

12.5.6 Sensitive directional residual overcurrent and power protection SDEPSDE (67N)

Prepare the IED for verification of settings outlined in section "Preparing the IED to verify settings".

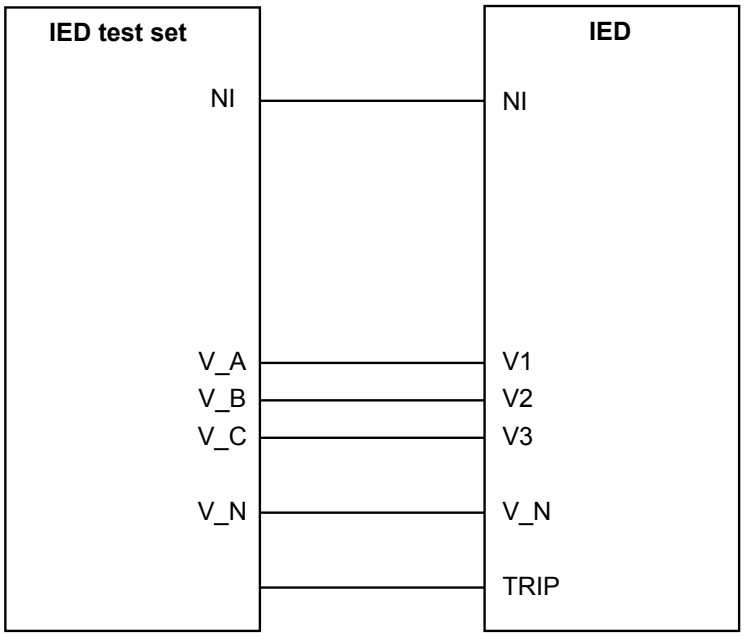

ANSI09000021-1-en.vsd

Figure 43: Principle connection of the test set

Values of the logical signals belonging to the sensitive directional residual overcurrent and power protection are available on the local HMI under **Main menu/Test/Function status/Current protection/SensDirResOvCurr(67N,IN>)/SDEPSDE(67N,IN>):x**

12.5.6.1 Measuring the operate and time limit for set values

Operation mode $3I_0 \cdot \cos\varphi$

Procedure

1. Set the polarizing voltage to 1.2 · *VNRelPU* and set the phase angle between voltage and current to the set characteristic angle (*RCADir*). Note that the the current lagging the voltage.

Take setting *RCAComp* into consideration if not equal to *0*.

2. Inject current until the function picks up, and make sure that the operate current of the set directional element is equal to the *INcosPhiPU* setting.
   The I Dir ($3I_0 \cdot \cos\varphi$) function activates the PICKUP and PUNDIN output.
3. Assume that φ´ is the phase angle between injected voltage ($3V_0$) and current ($3I_0$) i.e. φ´ = *RCADir*-φ. Change φ´ to for example 45 degrees. Increase the injected current until the function operates.
4. Compare the result with the set value and make sure that the new injected $3I_0 \cdot \cos\varphi$ is equal to the setting *INcosPhiPU*..
   Take the set characteristic into consideration, see Figure 44 and Figure 45.
5. Measure the operate time of the timer by injecting a current two times the set *INcosPhiPU* value and the polarizing voltage 1.2 · *VNRelPU*.

$$Tinv = \frac{\mathrm{TDSN} \cdot \mathrm{SRef}}{3I_0 \cdot 3V_{0test} \cdot \cos(\varphi)}$$

(Equation 77)

6. Compare the result with the expected value.
   The expected value depends on whether definite or inverse time was selected.
7. Set the polarizing voltage to zero and increase until the boolean output signal UNREL is activated, which is visible in the Application Configuration in PCM600 when the IED is in online mode. Compare the voltage with the set value *VNRelPU* .
8. Continue to test another function or complete the test by setting the test mode to *Disabled*.

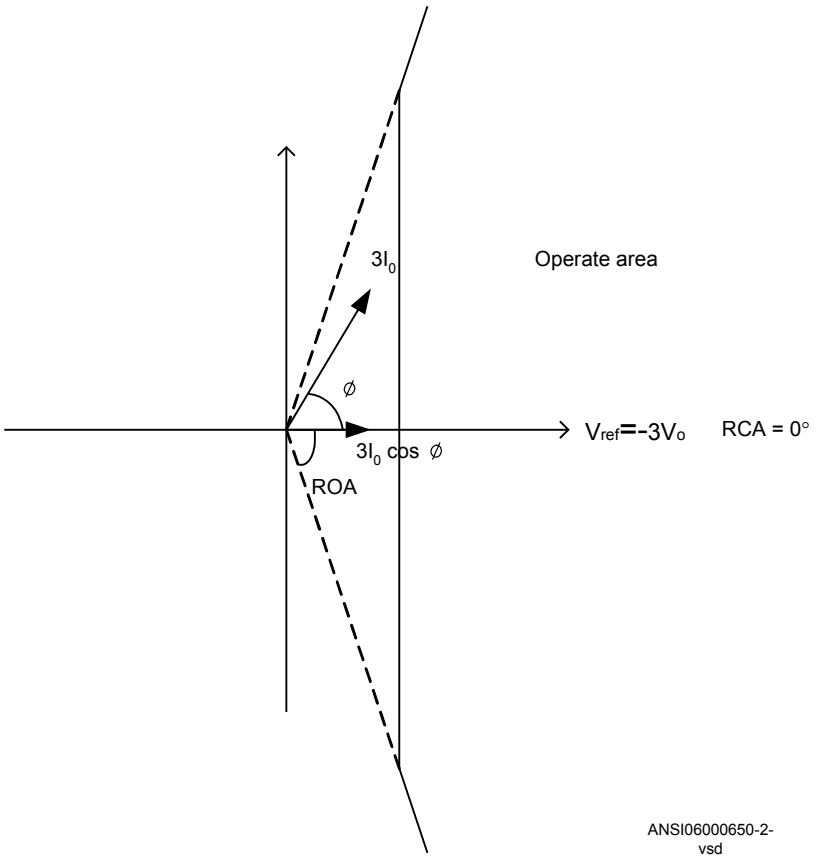

Figure 44: Characteristic with ROADir restriction

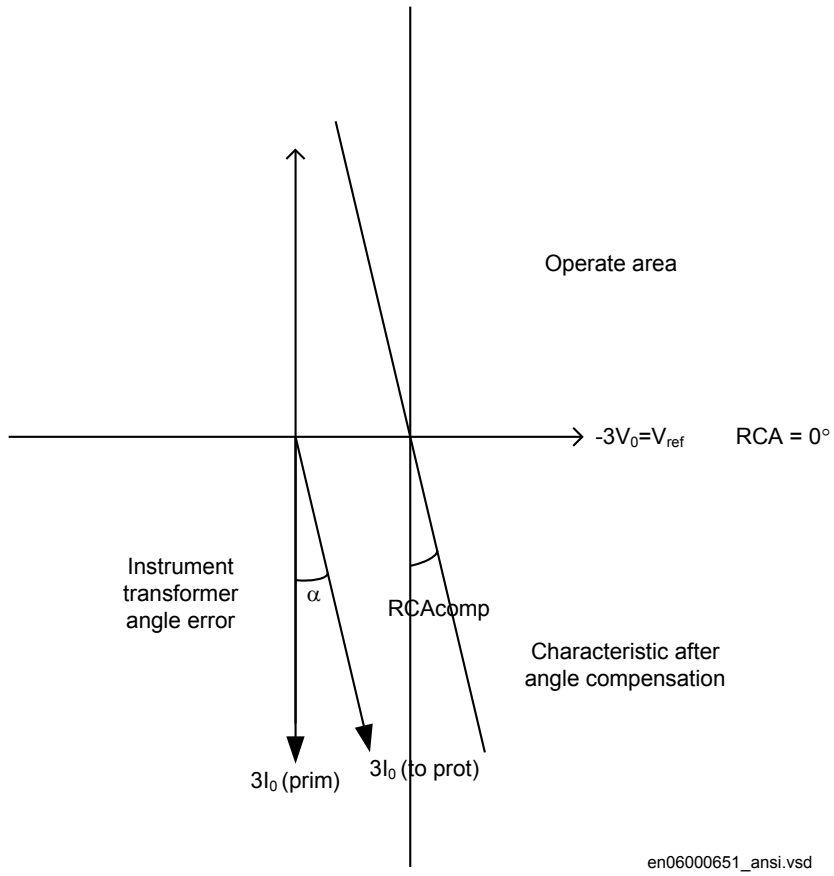

Figure 45: Explanation of RCAcomp

Operation mode $3I_0 \cdot 3V_0 \cdot \cos \varphi$

1. Set the polarizing voltage to 1.2 · *VNRelPU* and set the phase angle between voltage and current to the set characteristic angle (*RCADir*). Note that the current lagging the voltage.
2. Inject current until the function picks up, and make sure that the operate power is equal to the *SN_PU* setting for the set directional element.
   Note that for pick-up, both the injected current and voltage must be greater than the set values *INRelPU* and *VNRelPU* respectively.
   The function activates the PICKUP and PUDIRIN outputs.
3. Assume that φ´ is the phase angle between injected voltage ($3V_0$) and current ($3I_0$) i.e. φ´ = *RCADir*-φ. Change φ´ to for example 45 degrees. Increase the injected current until the function operates.

4. Compare the result with the set value and make sure that the new injected $3I_0 \cdot 3V_0 \cdot \cos\varphi$ is equal to the setting *SN_PU*. Take the set characteristic into consideration, see figure 44 and figure 45.
5. Measure the trip time of the timer by injecting 1.2 · *VNRelPU* and a current to get two times the set *SN_PU* trip value.

$$Tinv = \mathrm{TDSN} \cdot \mathrm{SRef} / 3I_{0test} \cdot 3V_{0test} \cdot \cos(\varphi)$$

(Equation 78)

6. Compare the result with the expected value.
   The expected value depends on whether definite or inverse time was selected.
7. Continue to test another function or complete the test by setting the test mode to *Disabled*.

Operation mode $3I_0$ and φ

1. Set the polarizing voltage to 1.2 · *VNRelPU* and set the phase angle between voltage and current to the set characteristic angle (*RCADir*). Note that the current lagging the voltage.
2. Inject current until the function picks up, and make sure that the operate current is equal to the *INRelPU* setting for the set directional element.

   Note that for pickup, both the injected current and voltage must be greater than the set values *INRelPU* and *VNRelPU* respectively.

   The function activates the PICKUPand PUDIRIN output.
3. Measure with angles φ around *RCADir +/- ROADir*.
4. Compare the result with the set values, refer to figure 46 for example characteristic.
5. Measure the trip time of the timer by injecting a current to get two times the set *SN_PU* trip value.

$$Tinv = \mathrm{TDSN} \cdot \mathrm{SRef} / 3I_{0test} \cdot 3V_{0test} \cdot \cos(\varphi)$$

(Equation 79)

6. Compare the result with the expected value.
   The expected value depends on whether definite or inverse time was selected.
7. Continue to test another function or complete the test by setting the test mode to *Disabled*.

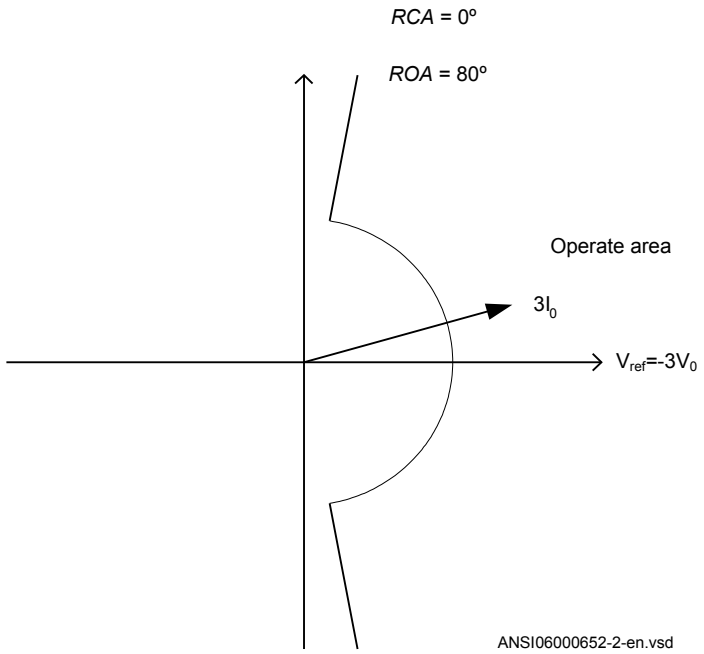

Figure 46: Example characteristic

Non-directional ground fault current protection

Procedure

1. Measure that the operate current is equal to the *INNonDirPU* setting.
   The function activates the PICKUP and PUDIRIN output.
2. Measure the trip time of the timer by injecting a current of 200% of the trip value.
3. Compare the result with the expected value.
   The expected value depends on whether definite time *tINNonDir* or inverse time was selected.
4. Continue to test another function or complete the test by setting the test mode to *Disabled*.

Residual overvoltage release and protection

Procedure

1. Measure that the trip voltage is equal to the *VN_PU* setting.
   The function activates the PICKUP and PUVN signals.
2. Measure the operate time by injecting a voltage 1.2 times set *VN_PU* trip value.
3. Compare the result with the set *tVN* trip value.

4. Inject a voltage 0.8 · *VNRelPU* and a current high enough to trip the directional function at the chosen angle.
5. Increase the voltage until the directional function is released.
6. Compare the measured value with the set *VNRelPU* trip value.

12.5.6.2 Completing the test

Continue to test another function or end the test by changing the *TestMode* setting to *Disabled*. Restore connections and settings to their original values, if they were changed for testing purposes.

12.5.7 Thermal overload protection, two time constants TRPTTR (49)

Prepare the IED for verification of settings outlined in section "Preparing the IED to verify settings".

12.5.7.1 Checking operate and reset values

1. Connect symmetrical three-phase currents to the appropriate current terminals of the IED.
2. Set the Time constant 1 (*Tau1*) and Time Constant 2 (*Tau2*) temporarily to 1 minute.
3. Set the three-phase injection currents slightly lower than the set operate value of stage *IBase1*, increase the current in phase A until stage *IBase1* operates and note the operate value.

   Observe the maximum permitted overloading of the current circuits in the IED.

4. Decrease the current slowly and note the reset value.
   Check, in the same way, the operate and reset values of *IBase1* for phases B and C.
5. Activate the cooling input signal, thus switching to base current *IBase2*.
6. Check the operate and reset values (for all three phases) for *IBase2* in the same way as described above for stage *IBase1*.
7. Deactivate the input signal for stage *IBase2*.
8. Set the time constant for *IBase1* in accordance with the setting plan.
9. Set the injection current for phase A to 1.50 · *IBase1*.
10. Connect a trip output contact to the timer and monitor the output of contacts ALARM1 and ALARM2 to digital inputs in test equipment.
    Read the heat content in the thermal protection from the local HMI and wait until the content is zero.

11. Switch on the injection current and check that ALARM1 and ALARM2 contacts operate at the set percentage level and that the operate time for tripping is in accordance with the set Time Constant 1 (*Tau1*).
    With setting Itr = 101%*IBase1* and injection current 1.50 · *IBase1*, the trip time from zero content in the memory shall be 0.60 · Time Constant 1 (*Tau1*).
12. Check that all trip and alarm contacts operate according to the configuration logic.
13. Switch off the injection current and check from the service menu readings of thermal status and LOCKOUT that the lockout resets at the set percentage of heat content.
14. Activate the cooling input signal to switch over to base current *IBase2*.
    Wait 5 minutes to empty the thermal memory and set Time Constant 2 (*Tau2*) in accordance with the setting plan.
15. Test with injection current 1.50 · *IBase2* the thermal alarm level, the operate time for tripping and the lockout reset in the same way as described for stage *IBase1*.
16. Finally check that pickup and trip information is stored in the event menu.

12.5.7.2 Completing the test

Continue to test another function or end the test by changing the *TestMode* setting to *Disabled*. Restore connections and settings to their original values, if they were changed for testing purposes.

12.5.8 Breaker failure protection, phase segregated activation and output CCRBRF (50BF)

Prepare the IED for verification of settings outlined in section "Preparing the IED to verify settings".

The Breaker failure protection, 3-phase activation and output function CCRBRF (50BF) should normally be tested in conjunction with some other function that provides an initiate signal. An external BFI_3P signal can also be used.

To verify the settings in the most common back-up trip mode *1 out of 3*, it is sufficient to test phase-to-ground faults.

At mode *2 out of 4* the phase current setting, *Pickup_PH* can be checked by single-phase injection where the return current is connected to the summated current input. The value of residual (ground fault) current IN set lower than *Pickup_PH* is easiest checked in back-up trip mode *1 out of 4*.

12.5.8.1 Checking the phase current operate value, *Pickup_PH*

The check of the *Pickup_PH* current level is best made in *FunctionMode = Current* and *BuTripMode = 1 out of 3* or *2 out of 4*.

1. Apply the fault condition, including BFI_3P of CCRBRF (50BF), with a current below set *Pickup_PH*.
2. Repeat the fault condition and increase the current in steps until a trip occurs.
3. Compare the result with the set *Pickup_PH*.
4. Disconnect AC and BFI_3P input signals.

Note! If *No CBPos Check* or *Retrip off* is set, only back-up trip can be used to check set *IP>*.

12.5.8.2 Checking the residual (ground fault) current operate value *Pickup_N* set below *Pickup_PH*

Check the low set *Pickup_N* current where setting *FunctionMode = Current* and setting *BuTripMode = 1 out of 4*

1. Apply the fault condition, including BFI_3P of CCRBRF (50BF), with a current just below set *Pickup_N*.
2. Repeat the fault condition and increase the current in steps until trip appears.
3. Compare the result with the set *Pickup_N*.
4. Disconnect AC and BFI_3P input signals.

12.5.8.3 Checking the re-trip and back-up times

The check of the set times can be made in connection with the check of operate values above.

Choose the applicable function and trip mode, such as *FunctionMode = Current* and *RetripMode = CB Pos Check* .

1. Apply the fault condition, including initiation of CCRBRF (50BF), well above the set current value. Measure time from BFI_3P of CCRBRF (50BF).
2. Check the re-trip *t1* and back-up trip times *t2* and *t3*.
   In applicable cases, the back-up trip for multi-phase pickup*t2MPh* and back-up trip 2, *t2* and *t3* can also be checked. To check *t2MPh*, a two-phase or three-phase initiation shall be applied.
3. Disconnect AC and BFI_3P input signals.

12.5.8.4 Verifying the re-trip mode

Choose the mode below, which corresponds to the actual case.

In the cases below it is assumed that *FunctionMode = Current* is selected.

Checking the case without re-trip, *RetripMode = Retrip Off*

1. Set *RetripMode = Retrip Off*.
2. Apply the fault condition, including initiation of CCRBRF (50BF), well above the set current value.
3. Verify that no re-trip, but back-up trip is achieved after set time.
4. Disconnect AC and BFI_3P input signals.

Checking the re-trip with current check, *RetripMode = CB Pos Check*

1. Set *RetripMode = CB Pos Check*.
2. Apply the fault condition, including initiation of CCRBRF (50BF), well above the set current value.
3. Verify that re-trip is achieved after set time *t1* and back-up trip after time *t2*
4. Apply the fault condition, including initiation of CCRBRF (50BF), with current below set current value.
5. Verify that no re-trip, and no back-up trip is obtained.
6. Disconnect AC and BFI_3P input signals.

Checking re-trip without current check, *RetripMode = No CBPos Check*

1. Set *RetripMode = No CBPos Check*.
2. Apply the fault condition, including initiation of CCRBRF (50BF), well above the set current value.
3. Verify that re-trip is achieved after set time *t1*, and back-up trip after time *t2*.
4. Apply the fault condition, including initiation of CCRBRF (50BF), with current below set current value.
5. Verify that re-trip is achieved after set time *t1*, but no back-up trip is obtained.
6. Disconnect AC and BFI_3P input signals.

12.5.8.5 Verifying the back-up trip mode

In the cases below it is assumed that *FunctionMode = Current* is selected.

Checking that back-up tripping is not achieved at normal CB tripping

Use the actual tripping modes. The case below applies to re-trip with current check.

1. Apply the fault condition, including initiation of CCRBRF (50BF), with phase current well above set value *Pickup_PH*.
2. Interrupt the current, with a margin before back-up trip time, *t2*. It may be made at issue of re-trip command.
3. Check that re-trip is achieved, if selected, but no back-up trip is obtained.
4. Disconnect AC and BFI_3P input signals.

The normal mode *BuTripMode = 1 out of 3* should have been verified in the tests above. In applicable cases the modes *1 out of 4* and *2 out of 4* can be checked. Choose the mode below, which corresponds to the actual case.

Checking the case *BuTripMode = 1 out of 4*

It is assumed that the ground-fault current setting *Pickup_N* is below phase current setting *Pickup_PH*.

1. Set *BuTripMode = 1 out of 4*.
2. Apply the fault condition, including initiation of CCRBRF (50BF), with one-phase current below set *Pickup_PH* but above *Pickup_N* . The residual ground-fault should then be above set *Pickup_N*.
3. Verify that back-up trip is achieved after set time. If selected, re-trip should also appear.
4. Disconnect AC and BFI_3P input signals.

Checking the case *BuTripMode = 2 out of 4*

The ground-fault current setting *Pickup_N* may be equal to or below phase-current setting *Pickup_PH*.

1. Set *BuTripMode = 2 out of 4*.
2. Apply the fault condition, including initiation of CCRBRF (50BF), with one-phase current above set *Pickup_PH* and residual (ground fault) above set *Pickup_N*.
3. Verify that back-up trip is achieved after set time. If selected, re-trip should also appear.
4. Apply the fault condition, including initiation of CCRBRF (50BF), with at least one-phase current below set *Pickup_PH* and residual (ground fault) above set *Pickup_N*. The current may be arranged by feeding three- (or two-) phase currents with equal phase angle (I0-component) below *Pickup_PH*, but of such value that the residual (ground fault) current ($3I_0$) will be above set value *Pickup_N*.
5. Verify that back-up trip is not achieved.
6. Disconnect AC and BFI_3P input signals.

12.5.8.6 Verifying instantaneous back-up trip at CB faulty condition

Applies in a case where a signal from CB supervision function regarding CB being faulty and unable to trip is connected to input 52FAIL.

1. Repeat the check of back-up trip time. Disconnect current and input signals.
2. Activate the input 52FAIL. The output CBALARM (CB faulty alarm) should appear after set time *tCBAlarm*. Keep the input activated.
3. Apply the fault condition, including initiation of CCRBRF (50BF), with current above set current value.
4. Verify that back-up trip is obtained without intentional delay, for example within 20ms from application of initiation.
5. Disconnect injected AC and BFI_3Pinput signals.

12.5.8.7 Verifying the case *RetripMode = Contact*

It is assumed that re-trip without current check is selected, *RetripMode = Contact*.

1. Set *FunctionMode = Contact*
2. Apply input signal for CB closed to relevant input or inputs 52a_A (B or C).
3. Apply input signal, or signals for initiation of CCRBRF (50BF).
4. Verify that phase selection re-trip and back-up trip are achieved after set times.
5. Disconnect the trip signal(s). Keep the CB closed signal(s).
6. Apply input signal(s), for initiation of CCRBRF (50BF).
7. Arrange disconnection of CB closed signal(s) well before set back-up trip time *t2*.
8. Verify that back-up trip is not achieved.
9. Disconnect injected AC and BFI_3P input signals.

12.5.8.8 Verifying the function mode *Current&Contact*

To be made only when *FunctionMode = Current&Contact* is selected. It is suggested to make the tests in one phase only, or at three-pole trip applications for just three-pole tripping.

Checking the case with fault current above set value Pickup_PH

The operation shall be as in *FunctionMode = Current*.

1. Set *FunctionMode = Current&Contact*.
2. Leave the inputs for CB close inactivated. These signals should not influence.
3. Apply the fault condition, including initiation of CCRBRF (50BF), with current above the set *Pickup_PH* value.
4. Check that the re-trip, if selected, and back-up trip commands are achieved.
5. Disconnect injected AC and BFI_3P input signals.

Checking the case with fault current below set value Pickup_BlkCont

The case shall simulate a case where the fault current is very low and operation will depend on CB position signal from CB auxiliary contact. It is suggested that re-trip without current check is used, setting *RetripMode = No CBPos Check*.

1. Set *FunctionMode = Current&Contact*.
2. Apply input signal for CB closed to relevant input or inputs 52a_A (B or C)
3. Apply the fault condition with input signal(s) for initiation of CCRBRF (50BF). The value of current should be below the set value *Pickup_BlkCont*
4. Verify that phase selection re-trip (if selected) and back-up trip are achieved after set times. Failure to trip is simulated by keeping the signal(s) CB closed activated.
5. Disconnect the AC and the BFI_3P signal(s). Keep the CB closed signal(s).
6. Apply the fault and the initiation again. The value of current should be below the set value *Pickup_BlkCont*.
7. Arrange disconnection of BC closed signal(s) well before set back-up trip time *t2*. It simulates a correct CB tripping.
8. Verify that back-up trip is not achieved. Re-trip can appear for example, due to selection “Re-trip without current check”.
9. Disconnect injected AC and BFI_3P input signals.

12.5.8.9 Completing the test

Continue to test another function or end the test by changing the *TestMode* setting to *Disabled*. Restore connections and settings to their original values, if they were changed for testing purposes.

12.5.9 Pole discrepancy protection CCPDSC (52PD)

Prepare the IED for verification of settings outlined in section "Preparing the IED to verify settings".

12.5.9.1 Verifying the settings

1. External detection logic, Contact function *selection = ContactSel* setting equals CCPDSC (52PD) signal from CB. Activate the EXTPDIND binary input, and measure the operating time of CCPDSC (52PD).
   Use the TRIP signal from the configured binary output to stop the timer.
2. Compare the measured time with the set value *tTrip*.
3. Reset the EXTPDIND input.
4. Activate the BLKDBYAR binary input.
   This test should be performed together with Autorecloser SMBRREC (79).
5. Activate the EXTPDIND binary input.

No TRIP signal should appear.
6. Reset both BLKDBYAR and EXTPDIND binary inputs.
7. Activate the BLOCK binary input.
8. Activate EXTPDIND binary input.
   NO TRIP signal should appear.
9. Reset both BLOCK and EXTPDIND binary inputs.
10. If Internal detection logic Contact function *selection* = *ContactSel* setting equals Pole position from auxiliary contacts. Then set inputs 52b_A...52a_C in a status that activates the pole discordance logic and repeats step 2 to step 6.
11. Unsymmetrical current detection with CB monitoring: Set measured current in one phase to 110% of current release level. Activate CLOSECMD and measure the operating time of the CCPDSC (52PD) protection.
    Use the TRIP signal from the configured binary output to stop the timer.
12. Deactivate the CLOSECMD: Set measured current in one phase to 90% of Current Release level. Activate CLOSECMD.
    NO TRIP signal should appear.
13. Repeat the previous two steps using OPENCMD instead of CLOSECMD. Asymmetry current detection with CB monitoring: Set all three currents to 110% of Current Release level. Activate CLOSECMD.
    NO TRIP signal should appear due to symmetrical condition.
14. Deactivate the CLOSECMD. Decrease one current with 120% of the current unsymmetrical level compared to the other two phases. Activate CLOSECMD and measure the operating time of the CCPDSC (52PD) protection.
    Use the TRIP signal from the configured binary output to stop the timer.
15. Deactivate the CLOSECMD. Decrease one current with 80% of the current unsymmetrical level compared to the other two phases. Activate CLOSECMD.
    NO TRIP signal should appear.

12.5.9.2 Completing the test

Continue to test another function or end the test by changing the *TestMode* setting to *Disabled*. Restore connections and settings to their original values, if they were changed for testing purposes.

12.5.10 Directional underpower protection GUPPDUP (37)

Prepare the IED for verification of settings outlined in section "Preparing the IED to verify settings".

12.5.10.1 Verifying the settings

The underpower protection shall be set to values according to the real set values to be used.

The test is made by means of injection of voltage and current where the amplitude of both current and voltage and the phase angle between the voltage and current can be controlled. During the test, the analog outputs of active and reactive power shall be monitored.

1. Connect the test set for injection of voltage and current corresponding to the mode to be used in the application. If a three-phase test set is available this could be used for all the modes. If a single-phase current/voltage test set is available the test set should be connected to a selected input for one-phase current and voltage.

Table 16: Calculation modes

Set value: *Mode*	Formula used for complex power calculation
A, B, C	$\bar{S} = \bar{V}_A \cdot \bar{I}_A^* + \bar{V}_B \cdot \bar{I}_B^* + \bar{V}_C \cdot \bar{I}_C^*$ (Equation 80)
Arone	$\bar{S} = \bar{V}_{AB} \cdot \bar{I}_A^* - \bar{V}_{BC} \cdot \bar{I}_C^*$ (Equation 81)
PosSeq	$\bar{S} = 3 \cdot \bar{V}_{PosSeq} \cdot \bar{I}_{PosSeq}^*$ (Equation 82)
AB	$\bar{S} = \bar{V}_{AB} \cdot (\bar{I}_A^* - \bar{I}_B^*)$ (Equation 83)
BC	$\bar{S} = \bar{V}_{BC} \cdot (\bar{I}_B^* - \bar{I}_C^*)$ (Equation 84)
CA	$\bar{S} = \bar{V}_{CA} \cdot (\bar{I}_C^* - \bar{I}_A^*)$ (Equation 85)
Table continues on next page	

Set value: *Mode*	Formula used for complex power calculation
A	$\bar{S} = 3 \cdot \bar{V}_A \cdot \bar{I}_A^*$ (Equation 86)
B	$\bar{S} = 3 \cdot \bar{V}_B \cdot \bar{I}_B^*$ (Equation 87)
C	$\bar{S} = 3 \cdot \bar{V}_C \cdot \bar{I}_C^*$ (Equation 88)

2. Adjust the injected current and voltage to the set values in % of *IBase* and *VBase* (converted to secondary current and voltage). The angle between the injected current and voltage shall be set equal to the set direction *Angle1*, angle for stage 1 (equal to 0° for low forward power protection and equal to 180° for reverse power protection). Check that the monitored active power is equal to 100% of rated power and that the reactive power is equal to 0% of rated power.
3. Change the angle between the injected current and voltage to *Angle1* + 90°. Check that the monitored active power is equal to 0% of rated power and that the reactive power is equal to 100% of rated power.
4. Change the angle between the injected current and voltage back to 0°. Decrease the current slowly until the PICKUP1 signal, pickup of stage 1, is activated.
5. Increase the current to 100% of *IBase*.
6. Switch the current off and measure the time for activation of TRIP1, trip of stage 1.
7. If a second stage is used, repeat steps 2 to 6 for the second stage.

12.5.10.2 Completing the test

Continue to test another function or end the test by changing the *TestMode* setting to *Disabled*. Restore connections and settings to their original values, if they were changed for testing purposes.

12.5.11 Directional overpower protection GOPPDOP (32)

Prepare the IED for verification of settings outlined in section "Preparing the IED to verify settings".

12.5.11.1 Verifying the settings

The overpower protection shall be set to values according to the real set values to be used. The test is made by means of injection of voltage and current where the amplitude of both current and voltage and the phase angle between the voltage and current can be controlled. During the test the analog outputs of active and reactive power shall be monitored.

1. Connect the test set for injection of voltage and current corresponding to the mode to be used in the application. If a three phase test set is available this could be used for all the modes. If a single phase current/voltage test set is available the test set should be connected to a selected input for one phase current and voltage.
2. Adjust the injected current and voltage to the set rated values in % of *IBase* and *VBase* (converted to secondary current and voltage). The angle between the injected current and voltage shall be set equal to the set direction *Angle1*, angle for stage 1 (equal to 0° for low forward power protection and equal to 180° for reverse power protection). Check that the monitored active power is equal to 100% of rated power and that the reactive power is equal to 0% of rated power.
3. Change the angle between the injected current and voltage to *Angle1* + 90°. Check that the monitored active power is equal to 0% of rated power and that the reactive power is equal to 100% of rated power.
4. Change the angle between the injected current and voltage back to *Angle1* value. Increase the current slowly from 0 until the PICKUP1 signal, pickup of stage 1, is activated. Check the injected power and compare it to the set value *Power1*, power setting for stage 1 in % of *Sbase*.
5. Increase the current to 100% of *IBase* and switch the current off.
6. Switch the current on and measure the time for activation of TRIP1, trip of stage 1.
7. If a second stage is used, repeat steps 2 to 6 for the second stage.

12.5.11.2 Completing the test

Continue to test another function or end the test by changing the *TestMode* setting to *Disabled*. Restore connections and settings to their original values, if they were changed for testing purposes.

12.5.12 Negative-sequence time overcurrent protection for machines NS2PTOC (46I2)

When inverse time overcurrent characteristic is selected, the operate time of the stage will be the sum of the inverse time delay and the set definite time delay. Thus, if only the inverse time delay is required, it is of utmost importance to set the definite time delay for that stage to zero.

12.5.12.1 Verifying settings by secondary injection

1. Connect the test set for injection of three-phase currents to the appropriate current terminals of the IED.
2. Go to **Main menu/Settings/Setting group n/Current protection/ NegSeqOverCurr2Step/NSOn/General** and make sure that the function is enabled, that is *Operation* is set to *Enabled*.
3. Inject current into IEDs in such a way that negative sequence component is created and then verify that negative sequence component of the injected currents is calculated correctly by the function. See example below for 1 A rated current transformer.
4. Inject pure negative sequence current, that is, phase currents with exactly same magnitude, reversed sequence and exactly 120° phase displaced into the IED with an initial value below negative sequence current pickup level. No output signals should be activated.
   Note: If it is difficult to obtain pure negative sequence current for the secondary injection test, a current corresponding to the two phase short-circuit condition can be used. A two phase short-circuit gives a negative sequence current of a magnitude: magnitude = $(1/\sqrt{3}) \cdot$ fault current.
5. Increase the injected current and note the value at which the step 1 of the function operates. Pickup signal PU_ST1 must be activated when amplitude of the negative sequence current lies slightly above the pickup level *I2-1*>. Corresponding trip signals TRST1 and TRIP is activated after the pre-set time delay has expired.
   Note: Block or disable operation of step 2 when testing step 1 if the injected current activates the step 2.
6. Decrease the current slowly and note the reset value.
7. Connect a trip output contact to a timer.
8. Set the current to 200 % of the pickup level of the step 1, switch on the current and check the definite time delay for trip signals TRST1 and TRIP. Once the measured negative sequence current exceeds the set pickup level *I2-1*>, the settable definite timer *t1* starts to count and trip signals is released after the set time delay has elapsed. The same test must be carried out to check the accuracy of definite time delay for ALARM signal.
   Note: The output ALARM is operated by PICKUP signal.
9. If inverse time is selected the trip signals TRST1 and TRIP operates after a time corresponding to the formula:

$$t[s] = \left[\frac{\dfrac{1}{\left(\dfrac{I2-1>}{100}\right)^2}}{(\text{Multiple of Pickup})^2} \right] \cdot K$$

This means that if current jumps from 0 to 2 times pickup and negative sequence capability value of generator *K1* is set to 10 sec and current pickup level *I2-1>* is set to 10% of rated generator current, then TRST1 and TRIP signals operates at time equal to 250 s ± tolerance.

10. Repeat the above-described tests for the step 2 of the function excluding the inverse time testing.
11. Finally check that pickup and trip information is stored in the event menu.

Example

The CT ratios $\frac{CTprim}{CT\sec}$ for all three phases is 1000 A, *IBase* is 1000 A, and the following secondary currents are applied:

IA	Ampl = 1.1 A	Angl = 15 deg
IB	Ampl = 0.6 A	Angl = 97 deg
IC	Ampl = 1.3 A	Angl = -135 deg

The service value output NSCURR indicating amplitude of negative sequence current in primary amperes should be 962A approximative.

12.5.12.2 Completing the test

Continue to test another functions or end the test by changing the Test mode setting to Off. Restore connections and settings to their original values, if they were changed for testing purposes. Make sure that all built-in features for this function, which shall be in operation, are enabled and with correct settings.

12.5.13 Accidental energizing protection for synchronous generator AEGPVOC (50AE)

Prepare the IED for verification of settings outlined in section "Preparing the IED to verify settings".

12.5.13.1 Verifying the settings

1. Connect the test set for three-phase current injection and for three phase voltage injection to the appropriate IED terminals.
2. Inject zero voltage to the IED.
3. Increase the injected symmetric three phase current slowly and note the operated value (pickup value) of the studied step of the function.
4. Decrease the current slowly and note the reset value.
5. Connect a trip output contact to a timer.
6. Set the injected current to 200% of the operate level of the tested stage, switch on the current and check the time delay.
7. Check that all trip and pickup contacts operate according to the configuration (signal matrises).
8. Finally check that pickup and trip information is stored in the event menu.
9. Inject rated symmetric three phase voltage to the IED.
10. Set the injected current to 200% of the operate level of the tested stage, switch on the current. The function does not pickup and trip.
11. Inject 95% of the set *27_pick_up* value symmetric three-phase voltage to the IED.
12. Set the injected current to 200% of the operate level of the tested stage, switch on the current. The function does pickup and trip.

12.5.14 Voltage-restrained time overcurrent protection VRPVOC(51V)

Prepare the IED for verification of settings outlined in section "Preparing the IED to verify settings".

12.5.14.1 Verifying the settings

Verifying settings by secondary injection

1. Connect the test set for three-phase current injection and three-phase voltage injection to the appropriate IED terminals.
2. Go to **Main menu/Settings/IED Settings/Current protection/ VoltageRestOverCurr (51V,2(I>/U<))/VRPVOC (51V,2(I>/U<)):1/General** and make sure that the function is enabled, that is, *Operation* is set to *Enabled*.
3. The test of the function may be performed by injecting restrain voltage and increasing the injected current(s). Note the value at which the PICKUP and STOC signals are set.

In the following equations, restrain voltage is the magnitude of the minimum phase-to-phase voltage in secondary volts.

The set operate value in secondary amperes is calculated according to the following equations:
First part of the characteristic (Restrain voltage ≤ 25% of *VBase*):

$$\frac{Picup\_Curr}{100} \times IBase \times \frac{CT\sec}{CTprim} \times \frac{VDepFact}{100}$$

(Equation 89)

Second part of the characteristic (25% of *VBase* ≤ Restrain voltage ≤ *VHighLimit*/100**VBase*), valid when setting parameter *VDepMode* = *Slope*:

$$\left(\frac{\left(\frac{Pickup\_Curr}{100} \times IBase \times \frac{CT\sec}{CTprim} \right) \times \left(1 - \frac{VDepFact}{100} \right)}{\frac{(VHighLimit - 25)}{100} \times VBase \times \frac{VT\sec}{VTprim}} \times \left(\mathrm{Re}\,strainVoltage - \frac{25}{100} \times VBase \times \frac{VT\sec}{VTprim} \right) \right) + \left(\frac{Pickup\_Curr}{100} \times IBase \times \frac{CT\sec}{CTprim} \times \frac{VDepFact}{100} \right)$$

(Equation 90)

Third part of the characteristic (*VHighLimit*/100**VBase* ≤ Restrain voltage):

$$\frac{Picup\_Curr}{100} \times IBase \times \frac{CT\sec}{CTprim}$$

(Equation 91)

Example (rated secondary current = 1A):

CT ratio	10 000/1
VT ratio	10 kV/100 V
Pickup_Curr	100%
VDepFact	25%
VHighLimit	100%
IBase	10 000 A
VBase	10 kV

A test for each section of the characteristic of the function VRPVOC may be performed; that may be achieved by applying the following voltages:
First section of the characteristic:
If *VDepMode* = *Slope*, the minimum measured phase-to-phase voltage is lower than 0,25**UBase*; if *VDepMode* = *Step*, the minimum measured phase-to-phase voltage is lower than *VHighLimit*/100**VBase*:

- VA: Ampl = 10 / √3; Angle = 0°
- VB: Ampl = 10 / √3; Angle = 240°
- VC: Ampl = 100 / √3; Angle = 120°

Second section of the characteristic only:
If *VDepMode* = *Slope*, the minimum measured phase-to-phase voltage is between 0,25**VBase* and *VHighLimit*/100**VBase*:

- VA: Ampl = 50 / √3; Angle = 0°
- VB: Ampl = 50 / √3; Angle = 240°
- VC: Ampl = 100 / √3; Angle = 120°

Last section of the characteristic:
If *VDepMode* = either *Slope* or *Step*, the minimum measured phase-to-phase voltage is higher than *VHighLimit*/100**VBase*:

- VA: Ampl = 105/ √3; Angle = 0°
- VB: Ampl = 105/ √3; Angle = 240°
- VC: Ampl = 105 / √3; Angle = 120°

4. Inject the voltages that are related to the first part of the characteristic, and then slowly increase the phase current IA from 0.0 A up to the value the function operates. The PICKUP and STOC signals must be activated when the amplitude of the phase current IA is slightly above 0.25 A on the secondary side. The corresponding trip signals TROC and TRIP will be activated after the pre-set time delay has expired.
5. Decrease the current IA slowly and note the reset value.
6. Repeat steps 4 and 5 applying voltages that are related to the second and the last section of the characteristic; the function operates when IA is slightly higher than: 0.5 A in the second section; 1A in the last section.
7. Connect the trip output contact to the input channel of the test set in order to stop the injection and measure the trip time.
8. If definite time delay is used for the overcurrent step, set the setting *Characterist* = *ANSI Def. Time*. Apply the voltages related to the last part of the characteristic and inject a current IA 200% higher than the set operation level, and check the definite time delay for trip (the signals TROC and TRIP of the protection function VRPVOC are active in trip condition).
9. If inverse time delay is used for the overcurrent step, the parameter setting *Characterist* shall be properly set; we can refer, for example, to the setting *IEC Very inv.*; If the IEC Very inverse time characteristic is selected, the trip signals TROC and TRIP will operate after a time defined by the equation:

$$t[s] = \frac{13.5 * k}{\left(\frac{I}{Pickup\_Curr}\right) - 1}$$

(Equation 92)

where:

t	Operate time in seconds
I	Measured value (for example, phase current)

Pickup_Curr Set trip value

This means that if the measured phase current jumps from 0 to 2 times the set operate level and time multiplier k is set to 1.0 s (default value), then the TROC and TRIP signals will operate after a time delay equal to 13.5 s ± tolerance. Taking into account the above explanation, inject the voltages related to the last part of the characteristic and inject a current IA 200% higher than the set operation level, and check the trip time delay.

If *tDef_OC* is set to a value different from 0 s, then this time delay is added to the one that is defined by the IDMT characteristic.

10. Check the start and trip information that are stored in the event menu.
11. The previous step 8 or 9 may be repeated also for the first and second section of the characteristic.
12. Supply the IED with symmetric three-phase voltages at their rated values. Go to **Main menu/Settings/IED Settings/Current protection/ VoltageRestOverCurr(51V,2(I>/U<))/VRPVOC(51V,2(I>/U<)):1/ Undervoltage** and set the setting *Operation_UV = Enabled* to activate the undervoltage stage.
13. Slowly decrease the voltage in two phases simultaneously, until the STUV and PICKUP signals appear.
14. Note the operate value. The set operate value in secondary volts is calculated according to the following equation:

$$\frac{Pickup\_Volt}{100} \times \frac{VBase}{\sqrt{3}} \times \frac{VT\sec}{VTprim}$$

(Equation 93)

If the VRPVOC function is used as an overcurrent protection with undervoltage seal-in, it is necessary to first inject sufficient current to activate the STOC signal before the under-voltage step is allowed to trip. In order to achieve that, apply symmetric three-phase voltages at their rated value and then inject a current IA that is 200% higher than the set operation level. Then slowly decrease the voltage in two phases simultaneously, until the STUV and PICKUP signals appear.

15. Increase slowly the applied voltages of the previous two phases and note the reset value.
16. Check that the trip output of the relay is connected to the input channel of the test in order to stop the injection and measure the trip time.

17. Inject symmetric three-phase voltages at their rated value and check that the STUV and PICKUP signals reset as well as the trip signals of the function block (TRIP and TRUV).
18. Instantaneously decrease the voltage in two phases simultaneously to a value 20% lower than the set operate value (take into account the previous note if VRPVOC is configured in ACT with the undervoltage seal-in feature).
19. Measure the definite time delay for the TRUV and TRIP signals and compare it with the set value *tDef_UV*.
20. Check that start and trip information is stored in the event menu.

12.5.14.2 Completing the test

Continue to test another function or end the test by changing the *TestMode* setting to *Disabled*. Restore connections and settings to their original values, if they were changed for testing purposes.

12.5.15 Generator stator overload protection GSPTTR (49S)

12.5.15.1 Verifying the settings

Explained testing method is given for default value for the *TD1* parameter.

The function has heating content memory features. Thus if testing shots are done consecutively, operate time will be shorten accordingly, compared to the given operate characteristic. Therefore either wait until set *tReset* time has elapsed, between two shots, or reset this memory by setting the RESET input into the function to value TRUE

1. Connect the test set for the appropriate three-phase current injection to the IED phases A, B and C. The protection shall be fed with a symmetrical three-phase current.
2. Set the injected current to 116% of IBase, switch on the current and check operate time of the trip, 120 s.
3. Decrease the current slowly.
4. The output signal PICKUP will reset if the measured current falls below reset level or if BLOCK signal is set to one.
5. Switch off the current.
6. Set the injected current to 120% of IBase, switch on the current and check operate time of the trip, 60 s.
7. Switch off the current.
8. Set the injected current to 154% of IBase, switch on the current and check operate time of the trip, 30 s.
9. Switch off the current.

10. Set the injected current to 226% of IBase, switch on the current and check operate time of the trip, 10 s.
11. Switch off the current.
12. Finally check that pickup and trip information is stored in the event menu.

12.5.15.2 Completing the test

Continue to test another function or end the test by changing the *Test mode* setting to *Disabled*. Restore connections and settings to their original values, if they were changed for testing purposes. Make sure that all built-in features for this function, which shall be in operation, are enabled and with correct settings.

12.5.16 Generator rotor overload protection (49R)

12.5.16.1 Verifying the settings

Explained testing method is given for default value for the *TD1* parameter.

The function has heating content memory features. Thus if testing shots are done consecutively, operate time will be shortened accordingly, compared to the given operate characteristic. Therefore, either wait until set *tReset* time has elapsed, between two shots, or reset this memory by setting the RESET input into the function to value TRUE.

Precautions if *MeasurCurrent* = DC. The magnitude of the injected current have to be decreased by multiplying it with a factor of 0.741 in order to get correct operate times when testing with three-phase symmetrical sinusoidal currents.

1. Connect the test set for the appropriate three-phase current injection to the IED phases A, B and C. The protection shall be fed with a symmetrical three-phase current.
2. Set the injected current to 113% of IBase, switch on the current and check operate time of the trip, 120 s.
3. Decrease the current slowly.
4. The output signal PICKUP will reset if the measured current falls below reset level or if BLOCK signal is set to one.
5. Switch off the current.
6. Set the injected current to 125% of IBase, switch on the current and check operate time of the trip, 60 s.
7. Switch off the current.
8. Set the injected current to 146% of IBase, switch on the current and check operate time of the trip, 30 s.
9. Switch off the current.

10. Set the injected current to 209% of IBase, switch on the current and check operate time of the trip, 10 s.
11. Switch off the current.
12. Set the injected current to 100% of IBase and switch on the current.
13. Decrease the current slowly under 37 PICKUP.
14. The signal 37 TRIP will be activated when timer *37 trip delay* expires.
15. Finally check that pickup and trip information is stored in the event menu.

Testing the protection

12.5.16.2 Completing the test

Continue to test another function or end the test by changing the *Test mode* setting to *Disabled*. Restore connections and settings to their original values, if they were changed for testing purposes. Make sure that all built-in features for this function, which shall be in operation, are enabled and with correct settings.

12.6 Voltage protection

12.6.1 Two step undervoltage protection UV2PTUV (27)

Prepare the IED for verification of settings outlined in section "Preparing the IED to verify settings".

12.6.1.1 Verifying the settings

Verification of PICKUP value and time delay to operate for Step 1

1. Check that the IED settings are appropriate, especially the PICKUP value, the definite time delay and the *1 out of 3* operation mode.
2. Supply the IED with three-phase voltages at their rated values.
3. Slowly decrease the voltage in one of the phases, until the PICKUP signal appears.
4. Note the operate value and compare it with the set value.

The operate value in secondary volts is calculated according to the following equations:

For phase-to-ground measurement:

$$\frac{Vpickup<}{100} \times \frac{VBase}{\sqrt{3}} \times \frac{VT\sec}{VTprim}$$

(Equation 94)

For phase-to-phase measurement:

$$\frac{Vpickup<}{100} \times VBase \times \frac{VT\sec}{VTprim}$$

(Equation 95)

5. Increase the measured voltage to rated load conditions.
6. Check that the PICKUP signal resets.
7. Instantaneously decrease the voltage in one phase to a value about 20% lower than the measured operate value.
8. Measure the time delay for the TRIP signal, and compare it with the set value.
9. Check the inverse time delay by injecting a voltage corresponding to 0.8 × Vpickup<.

For example, if the inverse time curve A is selected, the trip signals TRST1 and TRIP operate after a time corresponding to the equation:

$$t(s) = \frac{TD1}{\left(1 - \frac{V}{Vpickup<}\right)}$$

(Equation 96)

where:

t(s)	Operate time in seconds
TD1	Settable time multiplier of the function for step 1
V	Measured voltage
Vpickup<	Set pickup voltage for step 1

For example, if the measured voltage jumps from the rated value to 0.8 times the set pickup voltage level and time multiplier TD1 is set to 0.05 s (default value), then the TRST1 and TRIP signals operate at a time equal to 0.250 s ± tolerance.

10. The test above can be repeated to check the inverse time characteristic at different voltage levels.
11. Repeat the above-described steps for Step 2 of the function.

Extended testing

The tests above can be repeated for *2 out of 3* and for *3 out of 3* operation mode.

12.6.1.2 Completing the test

Continue to test another function or end the test by changing the *TestMode* setting to *Disabled*. Restore connections and settings to their original values, if they were changed for testing purposes.

12.6.2 Two step overvoltage protection OV2PTOV (59)

Prepare the IED for verification of settings outlined in section "Preparing the IED to verify settings".

12.6.2.1 Verifying the settings

Verification of single-phase voltage and time delay to operate for Step 1

1. Apply single-phase voltage below the set value *Pickup1*.
2. Slowly increase the voltage until the PU_ST1 signal appears.
3. Note the operate value and compare it with the set value.

The operate value in secondary volts is calculated according to the following equations:

For phase-to-ground measurement:

$$\frac{Vpickup>}{100} \times \frac{VBase}{\sqrt{3}} \times \frac{VT\sec}{VTprim}$$

(Equation 97)

For phase-to-phase measurement:

$$\frac{Vpickup>}{100} \times VBase \times \frac{VT\sec}{VTprim}$$

(Equation 98)

4. Decrease the voltage slowly and note the reset value.
5. Set and apply about 20% higher voltage than the measured operate value for one phase.
6. Measure the time delay for the TRST1 signal and compare it with the set value.
7. Check the inverse time delay by injecting a voltage corresponding to 1.2 × Vpickup>.

For example, if the inverse time curve A is selected, the trip signals TRST1 and TRIP operate after a time corresponding to the equation:

$$t(s) = \frac{TD1}{\left(\frac{V}{Vpickup>} - 1\right)}$$

(Equation 99)

where:

t(s)	Operate time in seconds
TD1	Settable time multiplier of the function for step 1
V	Measured voltage
Vpickup>	Set pickup voltage for step 1

For example, if the measured voltage jumps from 0 to 1.2 times the set pickup voltage level and time multiplier TD1 is set to 0.05 s (default value), then the TRST1 and TRIP signals operate at a time equal to 0.250 s ± tolerance.

8. The test above can be repeated to check the inverse time characteristic at different voltage levels.
9. Repeat the above-described steps for Step 2 of the function.

12.6.2.2 Extended testing

1. The tests above can be repeated for *2 out of 3* and for *3 out of 3* operation mode.

12.6.2.3 Completing the test

Continue to test another function or end the test by changing the *TestMode* setting to *Disabled*. Restore connections and settings to their original values, if they were changed for testing purposes.

12.6.3 Two step residual overvoltage protection ROV2PTOV (59N)

Prepare the IED for verification of settings outlined in section "Preparing the IED to verify settings".

12.6.3.1 Verifying the settings

1. Apply the single-phase voltage either to a single-phase voltage input or to a residual voltage input with the pickup value below the set value *Pickup1*.
2. Slowly increase the value until PU_ST1 appears.
3. Note the operate value and compare it with the set value.
4. Decrease the voltage slowly and note the reset value.
5. Set and apply about 20% higher voltage than the measured operate value for one phase.
6. Measure the time delay for the TRST1 signal and compare it with the set value.
7. Check the inverse time delay by injecting a voltage corresponding to 1.2 × Vpickup>.

For example, if the inverse time curve A is selected, the trip signals TRST1 and TRIP operate after a time corresponding to the equation:

$$t(s) = \frac{TD1}{\left(\frac{V}{Vpickup>} - 1\right)}$$

(Equation 100)

where:

t(s)	Operate time in seconds
TD1	Settable time multiplier of the function for step 1
V	Measured voltage
Vpickup>	Set pickup voltage for step 1

For example, if the measured voltage jumps from 0 to 1.2 times the set pickup voltage level and time multiplier TD1 is set to 0.05 s (default value), then the TRST1 and TRIP signals operate at a time equal to 0.250 s ± tolerance.

8. Repeat the test for Step 2 of the function.

12.6.3.2 Completing the test

Continue to test another function or end the test by changing the *TestMode* setting to *Disabled*. Restore connections and settings to their original values, if they were changed for testing purposes.

12.6.4 Overexcitation protection OEXPVPH (24)

Prepare the IED for verification of settings outlined in section "Preparing the IED to verify settings".

12.6.4.1 Verifying the settings

1. Enable function.
2. Connect a symmetrical three-phase voltage input from the test set to the appropriate connection terminals of the overexcitation protection OEXPVPH (24) is configured for a three-phase voltage input.
   A single-phase injection voltage is applied if the function is configured for a phase-to-phase voltage input.
   OEXPVPH (24) is conveniently tested using rated frequency for the injection voltage and increasing the injection voltage to get the desired overexcitation level.
3. Connect the alarm contact to the timer and set the time delay *tAlarm* temporarily to zero.
4. Increase the voltage and note the operate value *Pickup1*.
5. Reduce the voltage slowly and note the reset value.
6. Set the alarm time delay to the correct value according to the setting plan and check the time delay, injecting a voltage corresponding to 1.2 · *Pickup1*.
7. Connect a trip output contact to the timer and temporarily set the time delay *t_MinTripDelay* to 0.5s.
8. Increase the voltage and note the *Pickup2* operate value
9. Reduce the voltage slowly and note the reset value.
10. Set the time delay to the correct value according to the setting plan and check the time delay *t_MinTripDelay*, injecting a voltage corresponding to 1.2 · *Pickup2*.
11. Check that trip and alarm contacts operate according to the configuration logic.
12. Set the cooling time constant temporarily to min value (1min.) to quickly lower the thermal content.
13. Wait for a period equal to 6 times *t_CoolingK* switch 20 minutes on a voltage 1.15 · *Pickup1* and check the inverse operate time.
    Wait until the thermal memory is emptied, set the cooling time constant according to the setting plan and check another point on the inverse time curve injecting a voltage 1.3 · *Pickup1*.
14. Finally check that PICKUP and TRIP information is stored in the event menu.

12.6.4.2 Completing the test

Continue to test another function or end the test by changing the *TestMode* setting to *Disabled*. Restore connections and settings to their original values, if they were changed for testing purposes.

12.6.5 Voltage differential protection VDCPTOV (60)

Prepare the IED for verification of settings as outlined in section "Requirements" and section "Preparing for test" in this chapter.

12.6.5.1 Check of undervoltage levels

This test is relevant if the setting *BlkDiffAtVLow* = *Yes*.

Check of V1Low

Procedure

1. Connect voltages to the IED according to valid connection diagram and figure 47.
2. Apply voltage higher than the highest set value of *VDTrip*, *V1Low* and *V2Low* to the V1 three-phase inputs and to one phase of the V2 inputs according to figure 47.
   The voltage differential PICKUP signal is set.

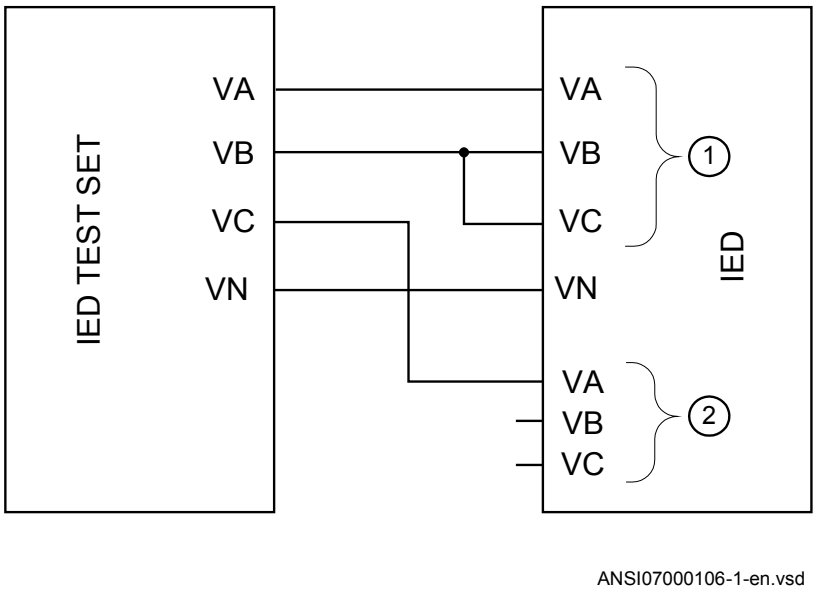

Figure 47: Connection of the test set to the IED for test of V1 block level

where:

1 is three-phase voltage group1 (V1)

2 is three-phase voltage group2 (V2)

3. Decrease slowly the voltage in phase VA of the test set until the PICKUP signal resets.
4. Check V1 blocking level by comparing the voltage level at reset with the set undervoltage blocking *V1Low*.
5. Repeat steps 2 to 4 to check *V1Low* for the other phases.

The connections to V1 must be shifted to test another phase. (VA to VB, VB to VC, VC to VA)

Check of V2Low

Procedure

1. Connect voltages to the IED according to valid connection diagram and figure 48.

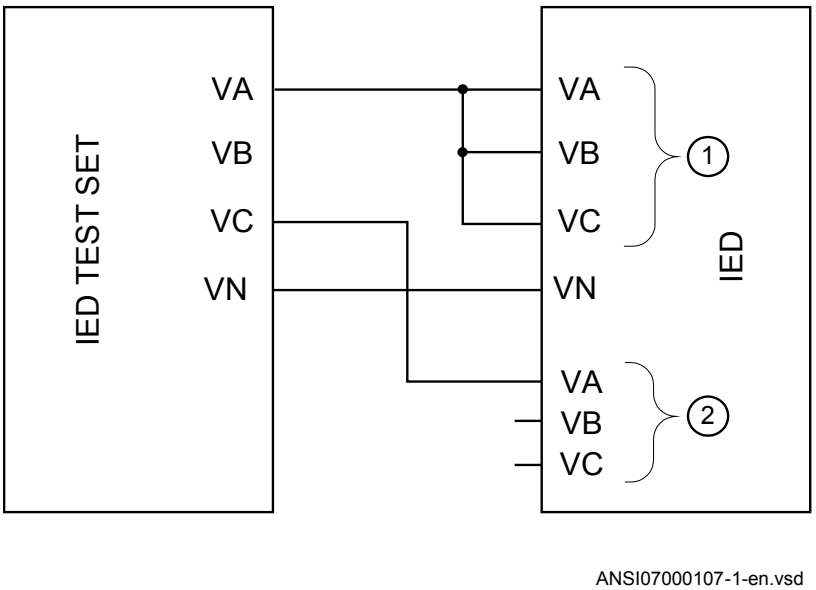

Figure 48: Connection of the test set to the IED for test of V2 block level

where:

1 is three-phase voltage group1 (V1)

2 is three-phase voltage group2 (V2)

2. Apply voltage higher than the highest set value of *VDTrip*, *V1Low* and *V2Low* to the V1 three-phase inputs and to one phase of the V2 inputs according to figure 48.
   The voltage differential PICKUP signal is set.
3. Decrease slowly the voltage in phase VC of the test set until the PICKUP signal resets.
4. Check V2 blocking level by comparing the voltage level at reset with the set undervoltage blocking *V2Low*.

12.6.5.2 Check of voltage differential trip and alarm levels

Procedure

1. Connect voltages to the IED according to valid connection diagram and figure 49.

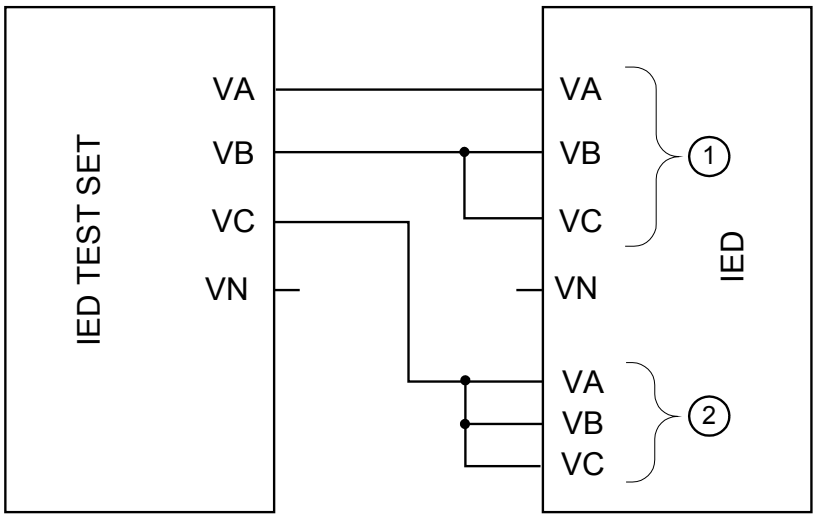

ANSI07000108-1-en.vsd

Figure 49: Connection of the test set to the IED for test of alarm levels, trip levels and trip timer

where:

1 is three-phase voltage group1 (V1)

2 is three-phase voltage group2 (V2)

2. Apply 1.2 · Vn (rated voltage) to the V1 and V2 inputs.
3. Decrease slowly the voltage of in phase VA of the test set until the ALARM signal is activated.

The ALARM signal is delayed with timer *tAlarm*

4. Check the alarm operation level by comparing the differential voltage level at ALARM with the set alarm level *VDAlarm*.
5. Continue to slowly decrease the voltage until PICKUP signal is activated.
6. Check the differential voltage operation level by comparing the differential voltage level at PICKUP with the set trip level *VDTrip*.
7. Repeat steps 1 to 6 to check the other phases.
   Observe that the connections to V1 must be shifted to test another phase. (VA to VB, VB to VC, VC to VA)

12.6.5.3 Check of trip and trip reset timers

Procdure

1. Connect voltages to the IED according to valid connection diagram and figure 49.
2. Set Vn (rated voltage) to the V1 inputs and increase V2 voltage until differential voltage is 1.5 · operating level (*VDTrip*).
3. Switch on the test set. Measure the time from activation of the PICKUP signal until TRIP signal is activated.
4. Check the measured time by comparing it to the set trip time *tTrip*.
5. Increase the voltage until PICKUP signal resets. Measure the time from reset of PICKUP signal to reset of TRIP signal.
6. Check the measured time by comparing it to the set trip reset time *tReset*.

12.6.5.4 Final adjustment of compensation for VT ratio differences

Procedure

1. With the protection in test mode, view the differential voltage service values in each phase on the local HMI under **Main menu/Test/Function status/Voltage protection/VoltageDiff(PTOV,60)/VDCPTOV:x**.

   The IED voltage inputs should be connected to the VTs according to valid connection diagram.

2. Record the differential voltages.
3. Calculate the compensation factor *RF_x* for each phase.
   For information about calculation of the compensation factor, see the application manual.
4. Set the compensation factors on the local HMI under **Main menu/Settings/ Settings group N/Voltage protection/VoltageDiff(PTOV,60)/VDCPTOV:x**
5. Check that the differential voltages are close to zero.

12.6.5.5 Completing the test

Continue to test another function or end the test by changing the *TestMode* setting to *Disabled*. Restore connections and settings to their original values, if they were changed for testing purposes.

12.6.6 100% Stator ground fault protection, 3rd harmonic based STEFPHIZ (59THD)

Prepare the IED for verification of settings outlined in section "Preparing the IED to verify settings".

12.6.6.1 Testing

The protection function uses measurement of the third-harmonic voltages in the neutral point of the generator and on the generator terminal (broken delta voltage transformer connection to the IED).

The test set shall be capable to generate third-harmonic voltages. One voltage (V_{N3}) is connected to the residual voltage input related to the terminal side of the generator. The second voltage (V_{N3}) is connected to the voltage input related to the neutral of the generator. The angle between the injected third-harmonic voltages shall be adjustable.

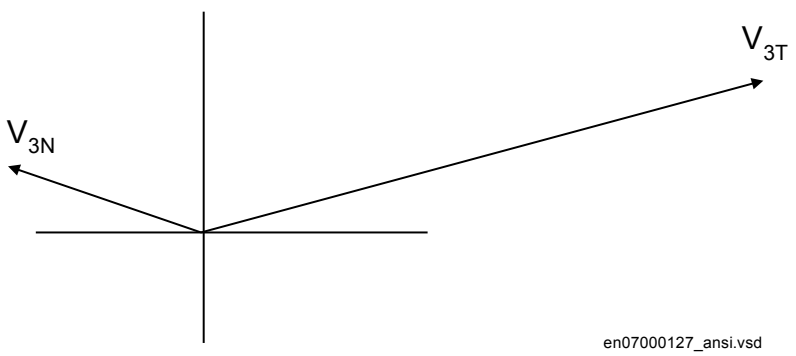

Figure 50: Typical phasor diagram for third harmonic voltages for healthy machine

1. Inject the following voltages: V_{3T} = 15 V, V_{3N} = 5 V and the angle between the voltages = 180°. Check the monitored values of the following analogue signals: E3 (the magnitude of the third-harmonic induced voltage in the stator), V_{3N}: 5 V (the magnitude of the third-harmonic voltage measured at the neutral side of the generator), V_{3T}: 15 V (the magnitude of the third-harmonic voltage measured at the terminal side of the generator) and ANGLE: 180° (the angle between the third-harmonic voltage phasors V_{3N} and V_{3T}). The value of E3 should be close to the following value:

$$E3 = \sqrt{\left(V_{3N} - V_{3T} \cdot \cos(ANGLE)\right)^2 + \left(V_{3T} \cdot \sin(ANGLE)\right)^2}$$

(Equation 101)

2. Read the value of DV (differential voltage). The value of DV should be close to the following value:

$$DU = \sqrt{\left(V_{3N} + V_{3T} \cdot \cos(ANGLE)\right)^2 + \left(V_{3T} \cdot \sin(ANGLE)\right)^2}$$

(Equation 102)

3. Decrease the value of the injected voltage V_{3N} until the signal PICKUP3H is activated. Check that

$$\frac{DV}{V_{3N}} = Beta$$

(Equation 103)

considering stated accuracy (*beta* is a setting parameter)

4. Increase the voltage V_{3N} so that the pickup signal falls. After that, switch the voltage V_{3N} to zero and measure the time delay for the activation of the signals TRIP and TRIP3H.
The 100% stator ground fault protection also has a fundamental frequency neutral point overvoltage function (95% stator ground fault protection). This part of the protection can be tested separately by means of fundamental frequency voltage injection from a test equipment.

12.6.6.2 Verifying settings

1. With the generator rotating at rated speed but not connected: check the value of the following analogue signals: E3 (the magnitude of the 3rd harmonic induced voltage in the stator), V_{3N} (the magnitude of the third-harmonic voltage measured at the neutral side of the generator), V_{3T} (the magnitude of the third-harmonic voltage measured at the terminal side of the generator) and ANGLE (the angle between the third-harmonic voltage phasors V_{3N} and V_{3T}). The value of E3 should be close to the following value:

$$E3 = \sqrt{\left(V_{3N} - V_{3T} \cdot \cos(ANGLE)\right)^2 + \left(V_{3T} \cdot \sin(ANGLE)\right)^2}$$

(Equation 104)

Make sure that ANGLE has a value bigger than 125°

2. Read the value of DV (differential voltage). The value of DV should be close to the following value:

$$DV = \sqrt{\left(V_{3N} + V_{3T} \cdot \cos(ANGLE)\right)^2 + \left(V_{3T} \cdot \sin(ANGLE)\right)^2}$$

(Equation 105)

3. Read the value of BV (bias voltage: *Beta* $\cdot V_{3N}$). The ratio DV/BV should be well below 1 for a non-faulted generator.
4. After synchronization of the generator the ratio DV/BV is checked for different load levels of the generator. These different monitoring of load levels should be the base for the setting of *beta*.
   If the function is used with the option of neutral point measurement only the test is performed by check of this voltage. The operate value should be above the measured residual third-harmonic voltage in the neutral point at normal operation (non-faulted generator).

12.6.6.3 Completing the test

Continue to test another function or end the test by changing the *TestMode* setting to *Disabled*. Restore connections and settings to their original values, if they were changed for testing purposes.

12.7 Frequency protection

12.7.1 Underfrequency protection SAPTUF (81)

Prepare the IED for verification of settings outlined in section "Preparing the IED to verify settings".

12.7.1.1 Verifying the settings

Verification of PICKUP value and time delay to trip

1. Check that the IED settings are appropriate, for example the PICKUP value and the time delay.
2. Supply the IED with three-phase voltages at their rated values.
3. Slowly decrease the frequency of the applied voltage, until the PICKUP signal appears.
4. Note the trip value and compare it with the set value.

5. Increase the frequency until rated operating levels are reached.
6. Check that the PICKUP signal resets.
7. Instantaneously decrease the frequency of the applied voltage to a value about 1% lower than the trip value (a step change more than 2% will increase the time delay).
8. Measure the time delay of the TRIP signal, and compare it with the set value. Note that the measured time consists of the set value for time delay plus minimum trip time of the pickup start function (80 - 90 ms).

Extended testing

1. The test above can be repeated to check the time to reset.
2. The tests above can be repeated to test the frequency dependent inverse time characteristic.

Verification of the low voltage magnitude blocking

1. Check that the IED settings are appropriate, for example the *PUFrequency*, *VMin*, and the *tDelay*.
2. Supply the IED with three-phase voltages at rated values.
3. Slowly decrease the magnitude of the applied voltage, until the BLKDMAGN signal appears.
4. Note the voltage magnitude value and compare it with the set value *VMin*.
5. Slowly decrease the frequency of the applied voltage, to a value below *PUFrequency*.
6. Check that the PICKUP signal does not appear.
7. Wait for a time corresponding to *tDelay*, make sure that the TRIP signal does not appear.

12.7.1.2 Completing the test

Continue to test another function or end the test by changing the *TestMode* setting to *Disabled*. Restore connections and settings to their original values, if they were changed for testing purposes.

12.7.2 Overfrequency protection SAPTOF (81)

Prepare the IED for verification of settings outlined in section "Preparing the IED to verify settings".

12.7.2.1 Verifying the settings

Verification of PICKUP value and time delay to trip

1. Check that the settings in the IED are appropriate, for example the PICKUP value and the time delay.
2. Supply the IED with three-phase voltages at their rated values.
3. Slowly increase the frequency of the applied voltage, until the PICKUP signal appears.
4. Note the trip value and compare it with the set value.
5. Decrease the frequency to rated operating conditions.
6. Check that the PICKUP signal resets.
7. Instantaneously increase the frequency of the applied voltage to a value about 1% lower than the trip value (a step change more than 2% will increase the time delay).
8. Measure the time delay for the TRIP signal, and compare it with the set value. Note that the measured time consists of the set value for time delay plus minimum trip time of the pickup function (80 - 90 ms).

Extended testing

1. The test above can be repeated to check the time to reset.

Verification of the low voltage magnitude blocking

1. Check that the settings in the IED are appropriate, for example the *PUFrequency*, *VMin*, and the *tDelay*.
2. Supply the IED with three-phase voltages at their rated values.
3. Slowly decrease the magnitude of the applied voltage, until the BLKDMAGN signal appears.
4. Note the voltage magnitude value and compare it with the set value, *VMin*.
5. Slowly increase the frequency of the applied voltage, to a value above *PUFrequency*.
6. Check that the PICKUP signal does not appear.
7. Wait for a time corresponding to *tDelay*, make sure that the TRIP signal does not appear.

12.7.2.2 Completing the test

Continue to test another function or end the test by changing the *TestMode* setting to *Disabled*. Restore connections and settings to their original values, if they were changed for testing purposes.

12.7.3 Rate-of-change frequency protection SAPFRC (81)

Prepare the IED for verification of settings outlined in section "Preparing the IED to verify settings".

12.7.3.1 Verifying the settings

PICKUP value and time delay to operate

1. Check that the settings in the IED are appropriate, especially the PICKUP value and the definite time delay. Set *PickupFreqgrad*, to a rather small negative value.
2. Supply the IED with three-phase voltages at their rated values.
3. Slowly decrease the frequency of the applied voltage, with an increasing rate-of-change that finally exceeds the setting of *PickupFreqgrad*, and check that the PICKUP signal appears.
4. Note the operate value and compare it with the set value.
5. Increase the frequency to rated operating conditions, and zero rate-of-change.
6. Check that the PICKUP signal resets.
7. Instantaneously decrease the frequency of the applied voltage to a value about 20% lower than the nominal value.
8. Measure the time delay for the TRIP signal, and compare it with the set value.

Extended testing

1. The test above can be repeated to check a positive setting of *PickupFreqGrad*.
2. The tests above can be repeated to check the time to reset.
3. The tests above can be repeated to test the RESTORE signal, when the frequency recovers from a low value.

12.7.3.2 Completing the test

Continue to test another function or end the test by changing the *TestMode* setting to *Disabled*. Restore connections and settings to their original values, if they were changed for testing purposes.

12.7.4 Frequency time accumulation protection function FTAQFVR (81A)

Prepare the IED for verification of settings as outlined in section “Overview” and section “Preparing for test” in this chapter.

12.7.4.1 Verifying the settings

Time measurement and the injection of current and voltage can be done using a common test equipment.

Verification of the PICKUP value and time delay to operation

1. Connect the test set for the injection of three-phase currents and three-phase voltages to the appropriate current and voltage terminals of the IED.
2. Ensure that the settings in the IED are appropriate, especially the *PickupCurrentLevel*, *FreqHighLimit*, *FreqLowLimit*, *VHighLimit* and *VLowLimit* setting.
3. Supply the IED with three-phase currents and voltages at their rated value.
4. Slowly decrease the frequency of the applied voltage until it crosses the frequency high limit and the BFI_3P signal appears.
5. Check that the FREQOK signal appears.
6. Compare the operate value to the set frequency high limit value.
7. Decrease the frequency of the applied voltage until it crosses the frequency low limit and the BFI_3P signal disappears.
8. Check that the FREQOK signal disappears.
9. Compare the reset value to the set frequency low limit value.
10. Readjust the frequency of the applied voltage (with steps of 0.001 Hz/s) to a value within the set frequency band limit.
11. Ensure that the BFI_3P signal reappears.
12. Wait for a time corresponding to *tCont* and ensure that the TRIP and TRIPCONT signals are generated.
13. Measure the time delay for the TRIP signal and compare it to the set value.

Verification of the ACCALARM value and time delay to trip

1. Connect the test set for the injection of three-phase currents and three-phase voltages to the appropriate current and voltage terminals of the IED.
2. Ensure that the settings in the IED are appropriate for the default settings, especially the *PickupCurrentLevel*, *FreqHighLimit*, *FreqLowLimit*, *VHighLimit* and *VLowLimit* setting.
3. Supply the IED with three-phase currents and voltages at their rated value.
4. Slowly decrease the frequency of the applied voltage until it crosses the frequency high limit and the BFI_3P signal appears.
5. Continuously change the frequency of the applied voltage, so that for a certain time the frequency is outside the set band limit and falls gradually within the band limit.
6. Count only the time when the frequency lies within the set frequency band limit. Wait for a time corresponding to *tAccLimit* and ensure that the ACCALARM signal appears.
7. Measure the time delay for the ACCALARM signal and compare it to the set value.

Extended testing

1. To check the value of TRIPACC, repeat the above test case in such a way that the frequency of the applied voltage is within the set frequency band when time approaches the *tAccLimit* setting value.

Verification of generator start and stop logic

1. Ensure that the settings in the IED are appropriate to the default settings, especially the *PickupCurrentLevel*, *FreqHighLimit*, *FreqLowLimit*, *VHighLimit* and *VLowLimit*.
2. Ensure that the setting *CBCheck* is enabled.
3. Supply the IED with three-phase currents and voltages at their rated values.
4. Slowly decrease the frequency of the applied voltage until the BFI_3P signal appears.
5. Activate the CBOPEN input signal.
6. Slowly decrease the injected current below the *PickupCurrentLevel* value until the BFI_3P signal disappears.
7. Compare the current magnitude value to the set value.

Verification of voltage band limit check logic

1. Ensure that the settings in the IED are appropriate to the default settings, especially the *PickupCurrentLevel*, *FreqHighLimit*, *FreqLowLimit*, *VHighLimit* and *VLowLimit* settings.
2. Ensure that the *EnaVoltCheck* is enabled.
3. Supply the IED with three-phase currents and voltages at their rated values.
4. Check that the VOLTOK signal appears.
5. Slowly decrease the frequency of the applied voltage until the BFI_3P signal appears.
6. Slowly decrease the positive-sequence voltage of the injected voltage below the *VLowLimit* value until the BFI_3P signal disappears.
7. Check that the VOLTOK signal disappears.
8. Compare the reset value to the set voltage low limit value.
9. Readjust the positive-sequence voltage of the applied voltage to a value within the set voltage band limits.
10. Check that the BFI_3P signal reappears.
11. Slowly increase the positive-sequence voltage of the injected voltage above the *VUHighLimit* value until the BFI_3P signal disappears.
12. Compare the reset value to the set voltage high limit value.

12.7.4.2 Completing the test

- Continue to test another function or end the test by changing the *Test mode* setting to *Disabled*.
- Restore connections and settings to their original values if they were changed for testing purposes.

12.8 Multipurpose protection

12.8.1 General current and voltage protection CVGAPC

Prepare the IED for verification of settings as outlined in section "Requirements" and section "Preparing for test" in this chapter.

One of the new facilities within the general current and voltage protection function CVGAPC is that the value, which is processed and used for evaluation in the function, can be chosen in many different ways by the setting parameters *CurrentInput* and *VoltageInput*.

These setting parameters decide what kind of preprocessing the connected three-phase CT and VT inputs shall be subjected to. That is, for example, single-phase quantities, phase-to-phase quantities, positive sequence quantities, negative sequence quantities, maximum quantity from the three-phase group, minimum quantity from the three-phase group, difference between maximum and minimum quantities (unbalance) can be derived and then used in the function.

Due to the versatile possibilities of CVGAPC itself, but also the possibilities of logic combinations in the application configuration of outputs from more than one CVGAPC function block, it is hardly possible to define a fully covering general commissioning test.

12.8.1.1 Built-in overcurrent feature (non-directional)

Procedure

1. Go to **Main menu/Test/Function test modes/Multipurpose protection/ GeneralCurrentVoltage(GAPC)/CVGAPC:x** and make sure that CVGAPC to

be tested is unblocked and other functions that might disturb the evaluation of the test are blocked.

2. Connect the test set for injection of three-phase currents to the appropriate current terminals of the IED in the 670 series.
3. Inject current(s) in a way that relevant measured current (according to setting parameter *CurrentInput*) is created from the test set. Increase the current(s) until the low set stage operates and check against the set operate value.
4. Decrease the current slowly and check the reset value.
5. Block high set stage if the injection current will activate the high set stage when testing the low set stage according to below.
6. Connect a TRIP output contact to the timer.
7. Set the current to 200% of the operate value of low set stage, switch on the current and check the time delay.
   For inverse time curves, check the operate time at a current equal to 110% of the operate current at *t_MinTripDelay*.
8. Check that TRIP and PICKUP contacts operate according to the configuration logic.
9. Release the blocking of the high set stage and check the operate and reset value and the time delay for the high set stage in the same way as for the low set stage.
10. Finally check that PICKUP and TRIP information is stored in the event menu.

Information on how to use the event menu is found in the operator's manual.

12.8.1.2 Overcurrent feature with current restraint

The current restraining value has also to be measured or calculated and the influence on the operation has to be calculated when the testing of the operate value is done.

Procedure

1. Operate value measurement
   The current restraining value has also to be measured or calculated and the influence on the operation has to be calculated when the testing of the operate value is done.

12.8.1.3 Overcurrent feature with voltage restraint

Procedure

1. Connect the test set for injection of three-phase currents and three-phase voltages to the appropriate current and voltage terminals of the IED.
2. Inject current(s) and voltage(s) in a way that relevant measured (according to setting parameter *CurrentInput* and *VoltageInput*) currents and voltages are created from the test set.
   Overall check in principal as above (non-directional overcurrent feature)
3. Operate value measurement
   The relevant voltage restraining value (according to setting parameter *VoltageInput*) has also to be injected from the test set and the influence on the operate value has to be calculated when testing of the operate value is done.
4. Operate time measurement
   Definite times may be tested as above (non-directional overcurrent feature). For inverse time characteristics the PICKUP value (to which the overcurrent ratio has to be calculated) is the actual pickup value as got with actual restraining from the voltage restraining quantity.

12.8.1.4 Overcurrent feature with directionality

Please note that the directional characteristic can be set in two different ways either just dependent on the angle between current and polarizing voltage (setting parameter *DirPrinc_OC1* or *DirPrinc_OC2* set to or in a way that the operate value also is dependent on the angle between current and polarizing voltage according to the I · cos(Φ) law (setting parameter *DirPrinc_OC1* or *DirPrinc_OC2* set to I · cos(Φ). This has to be known if a more detailed measurement of the directional characteristic is made, than the one described below.

Procedure

1. Connect the test set for injection of three-phase currents and three-phase voltages to the appropriate current and voltage terminals of the IED.
2. Inject current(s) and voltage(s) in a way that relevant measured (according to setting parameter *CurrentInput* and *VoltageInput*) currents and voltages are created from the test set.
3. Set the relevant measuring quantity current to lag or lead (lag for negative RCA angle and lead for positive RCA angle) the relevant polarizing quantity voltage by an angle equal to the set IED characteristic angle (rca-dir) when forward directional feature is selected and the *CTWYEpoint* configuration parameter is set to *ToObject*.
   If reverse directional feature is selected or *CTWYEpoint* configuration parameter is set to *FromObject*, the angle between current and polarizing voltage shall be set equal to rca-dir+180°.

4. Overall check in principal as above (non-directional overcurrent feature)
5. Reverse the direction of the injection current and check that the protection does not operate.
6. Check with low polarization voltage that the feature becomes non-directional, blocked or with memory according to the setting.

12.8.1.5 Over/Undervoltage feature

Procedure

1. Connect the test set for injection three-phase voltages to the appropriate voltage terminals of the IED.
2. Inject voltage(s) in a way that relevant measured (according to setting parameter *VoltageInput*) voltages are created from the test set.
3. Overall check in principal as above (non-directional overcurrent feature) and correspondingly for the undervoltage feature.

12.8.1.6 Completing the test

Continue to test another function or end the test by changing the *TestMode* setting to *Disabled*. Restore connections and settings to their original values, if they were changed for testing purposes.

12.9 Secondary system supervision

12.9.1 Current circuit supervision CCSSPVC (87)

Prepare the IED for verification of settings outlined in section "Preparing the IED to verify settings".

The Current circuit supervision function CCSSPVC (87) is conveniently tested with the same three-phase test set as used when testing the measuring functions in the IED.

The condition for this procedure is that the setting of *IMinOp* is lower than the setting of *Pickup_Block*.

12.9.1.1 Verifying the settings

1. Check the input circuits and the operate value of the *IMinOp* current level detector by injecting current, one phase at a time.
2. Check the phase current blocking function for all three phases by injecting current, one phase at a time. The output signals shall reset with a delay of 1 second when the current exceeds 1.5 · *IBase*.
3. Inject a current 0.1 · *IBase* to the reference current input Analogue channel ID current input 5.
4. Increase slowly the current in one of the phases current input and check that FAIL output is obtained when the current is about 0.9 · *IBase*.

12.9.1.2 Completing the test

Continue to test another function or end the test by changing the *TestMode* setting to *Disabled*. Restore connections and settings to their original values, if they were changed for testing purposes.

12.9.2 Fuse failure supervision FUFSPVC

Prepare the IED for verification of settings outlined in section "Preparing the IED to verify settings".

The verification is divided in two main parts. The first part is common to all fuse failure supervision options, and checks that binary inputs and outputs operate as expected according to actual configuration. In the second part the relevant set operate values are measured.

12.9.2.1 Checking that the binary inputs and outputs operate as expected

1. Simulate normal operating conditions with the three-phase currents in phase with their corresponding phase voltages and with all of them equal to their rated values.
2. Connect the nominal dc voltage to the 89bS binary input.
   - The signal BLKV should appear with almost no time delay.
   - The signals BLKZ and 3PH should not appear on the IED.
   - Only the distance protection function can operate.
   - Undervoltage-dependent functions must not operate.
3. Disconnect the dc voltage from the 89b binary input terminal.
4. Connect the nominal dc voltage to the MCBOP binary input.
   - The BLKVand BLKZ signals should appear without any time delay.
   - All undervoltage-dependent functions must be blocked.
5. Disconnect the dc voltage from the MCBOP binary input terminal.

6. Disconnect one of the phase voltages and observe the logical output signals on the binary outputs of the IED.
   BLKV and BLKZ signals should appear simultaneously wether the BLKV and BLKZ reset depends on the setting *SealIn* “on” or “off”. If “on” no reset, if “off” reset.
7. After more than 5 seconds disconnect the remaining two-phase voltages and all three currents.
   - There should be no change in the high status of the output signals BLKV and BLKZ.
   - The signal 3PH will appear.
8. Establish normal voltage and current operating conditions simultaneously and observe the corresponding output signals.
   They should change to logical 0 as follows:
   - Signal 3PH after about 25ms
   - Signal BLKV after about 50ms
   - Signal BLKZ after about 200ms

12.9.2.2 Measuring the operate value for the negative sequence function

Measure the operate value for the negative sequence function, if included in the IED.

1. Simulate normal operating conditions with the three-phase currents in phase with their corresponding phase voltages and with all of them equal to their rated values.
2. Slowly decrease the measured voltage in one phase until the BLKV signal appears.
3. Record the measured voltage and calculate the corresponding negative-sequence voltage according to the equation (observe that the voltages in the equation are phasors):

$$3 \cdot \overline{V_2} = \overline{V_A} + a^2 \cdot \overline{V_B} + a \cdot \overline{V_C}$$

(Equation 106)

Where:

$\overline{V_A}\,\overline{V_B}\,and\,\overline{V_C}$ are the measured phase voltages

$$a = 1 \cdot e^{j\frac{2\cdot\pi}{3}} = -0.5 + j\frac{\sqrt{3}}{2}$$

4. Compare the result with the set value of the negative-sequence operating voltage (consider that the set value *3V2PU* is in percentage of the base voltage *VBase*).

5. Repeat steps 1 and 2 . Then slowly increase the measured current in one phase until the BLKV signal disappears.
6. Record the measured current and calculate the corresponding negative-sequence current according to the equation (observe that the currents in the equation are phasors):

$$3 \cdot \overline{I_2} = \overline{I_A} + a^2 \cdot \overline{I_B} + a \cdot \overline{I_C}$$

(Equation 109)

Where:

$\overline{I_A}, \overline{I_B}$ *and* $\overline{I_C}$ are the measured phase currents

$$a = 1 \cdot e^{j\frac{2 \cdot \pi}{3}} = -0.5 + j\frac{\sqrt{3}}{2}$$

7. Compare the result with the set value of the negative-sequence operating current. Consider that the set value *3I2<* is in percentage of the base current *IBase*.

12.9.2.3 Measuring the operate value for the zero-sequence function

Measure the operate value for the zero-sequence function, if included in the IED.

1. Simulate normal operating conditions with the three-phase currents in phase with their corresponding phase voltages and with all of them equal to their rated values.
2. Slowly decrease the measured voltage in one phase until the BLKV signal appears.
3. Record the measured voltage and calculate the corresponding zero-sequence voltage according to the equation (observe that the voltages in the equation are phasors):

$$3 \cdot \overline{V_0} = \overline{V_A} + \overline{V_B} + \overline{V_C}$$

(Equation 112)

Where:

$\overline{V_A}\overline{V_B}$ *and* $\overline{V_C}$ are the measured phase voltages

4. Compare the result with the set value of the zero-sequence operating voltage (consider that the set value *3V0Pickup* is in percentage of the base voltage.)

5. Repeat steps 1 and 2 . Then slowly increase the measured current in one phase until the BLKV signal disappears.
6. Record the measured current and calculate the corresponding zero-sequence current according to the equation (observe that the currents in the equation are phasors):

$$3 \cdot \overline{I_0} = \overline{I_A} + \overline{I_B} + \overline{I_C}$$

(Equation 114)

Where:

$\overline{I_A}, \overline{I_B}$ *and* $\overline{I_C}$ are the measured phase currents

7. Compare the result with the set value of the zero-sequence operating current. Consider that the set value *3I0*< is in percentage of the base current *IBase*.

12.9.2.4 Measuring the operate value for the dead line detection function

1. Apply three-phase voltages with their rated value and zero currents.
2. Decrease the measured voltage in one phase until the DLD1PH signal appears.
3. This is the point at which the dead line condition is detected. Check the value of the decreased voltage with the set value VDLDPU (VDLDPU is in percentage of the base voltage *VBase*).
4. Apply three-phase currents with their rated value and zero voltages.
5. Decrease the measured current in one phase until the DLD1PH signal appears.
6. This is the point at which the dead line condition is detected. Check the value of the decreased current with the set value IDLDPU (IDLDPU is in percentage of the base current *IBase*).

12.9.2.5 Checking the operation of the dv/dt and di/dt based function

Check the operation of the dv/dt and di/dt based function if included in the IED.

1. Simulate normal operating conditions with the three-phase currents in phase with their corresponding phase voltages and with all of them equal to their rated values.
2. Change the voltages and currents in all three phases simultaneously.
   The voltage change must be higher than the set value *DVPU* and the current change must be lower than the set value *DIPU*.

- The BLKV and BLKZ signals appear without any time delay. The BLKZ signal will be activated only if the internal deadline detection is not activated at the same time.
- 3PH should appear after 5 seconds, if the remaining voltage levels are lower than the set *VDLDPU* of the dead line detection function.

3. Apply normal conditions as in step 1.
   The BLKV, BLKZ and 3PH signals should reset, if activated, see step 1 and 2.
4. Change the voltages and currents in all three phases simultaneously.
   The voltage change must be higher than the set value *DVPU* and the current change must be higher than the set value *DIPU*.
   The BLKV, BLKZ and 3PH signals should not appear.
5. Repeat step 2.
6. Connect the nominal voltages in all three phases and feed a current below the operate level in all three phases.
7. Keep the current constant. Disconnect the voltage in all three phases simultaneously.
   The BLKV, BLKZ and 3PH signals should not appear.
8. Change the magnitude of the voltage and current for phase 1 to a value higher than the set value *DVPU* and *DIPU*.
9. Check that the pickup output signals PU_DV_A and PU_DI_A and the general pickup signals PU_DV or PU_DI are activated.
10. Check that the pickup output signals for the current and voltage phases 2 and 3 are activated by changing the magnitude of the voltage and current for phases 2 and 3.

12.9.2.6 Completing the test

Continue to test another function or end the test by changing the *TestMode* setting to *Disabled*. Restore connections and settings to their original values, if they were changed for testing purposes.

12.9.3 Fuse failure supervision

Prepare the IED for verification of settings outlined in section "Preparing the IED to verify settings".

Checking the operation of binary input and output

1. Simulate normal operation conditions with three-phase voltage on the main fuse group and the pilot fuse group. Ensure the values are equal to their rated values.
2. Disconnect one of the phase voltage from the main fuse group or the pilot fuse group. Observe the binary outputs of the IED. The MAINFUF or the PILOTFUF

signals are simultaneously activated. Only the output circuit related to the open phase will be active i.e either MAINFUF or PILOTFUF.
3. Establish a normal voltage operating condition and observe the corresponding output signals. MAINFUF or PILOTFUF should change to *0* in about 27 ms.
4. Set normal conditions as mentioned in step 1.
5. Enable the BLOCK binary input and repeat step 2. MAINFUF or PILOTFUF should not appear.

Checking the operation of MAINFUF and PILOTFUF

1. Simulate normal operation conditions with three-phase voltage on the main fuse group and the pilot fuse group. Ensure the values are equal to their rated values.
2. Decrease one of the three-phase voltages on main fuse group or pilot fuse group. The voltage change must be greater than the set value for *Vdif Main block* or *Vdif Pilot alarm*. MAINFUF or PILOTFUF signals are activated without any time delay.
3. Set normal conditions as mentioned in step 1. MAINFUF or PILOTFUF signals should reset.
4. Set *SealIn* to *On*, *Vdif Main block* to 20% of *VBase* and *VSealIn* to 70% of *VBase*.
5. Apply three-phase voltages with the value slightly below *VSealIn* level.
6. Decrease one of the three-phase voltages on main fuse group. The voltage change must be greater than the set value for *Vdif Main block*. MAINFUF signal is activated.
7. After more than 5 seconds increase the measured voltage back to the value slightly below *VSealIn* level. MAINFUF signal should not reset.
8. Slowly increase measured voltage to the value slightly above *VSealIn* until MAINFUF signal resets.
9. Record the measured voltage and compare with the set value *VSealIn*.

12.9.3.1 Completing the test

Continue to test another function or end the test by changing the *TestMode* setting to *Disabled*. Restore connections and settings to their original values, if they were changed for testing purposes.

12.10 Control

12.10.1 Synchrocheck, energizing check, and synchronizing SESRSYN (25)

This section contains instructions on how to test the synchrochecksynchronism check, energizing check, and synchronizing function SESRSYN (25) for single, double and breaker-and-a-half arrangements.

Prepare the IED for verification of settings outlined in section "Preparing the IED to verify settings".

At commissioning and periodical checks, the functions shall be tested with the used settings. To test a specific function, it might be necessary to change some setting parameters, for example:

- *AutoEnerg = Disabled/DLLB/DBLL/Both*
- *ManEnerg = Disabled*
- *Operation = Disabled/Enabled*
- Activation of the voltage selection function if applicable

The tests explained in the test procedures below describe the settings, which can be used as references during testing before the final settings are specified. After testing, restore the equipment to the normal or desired settings.

A secondary injection test set with the possibility to alter the phase angle and amplitude of the voltage is needed. The test set must also be able to generate different frequencies on different outputs.

The description below applies for a system with a nominal frequency of 60 Hz but can be directly applicable to 50 Hz. SESRSYN (25) can be set to use different phases, phase to ground or phase to phase. Use the set voltages instead of what is indicated below.

Figure 51 shows the general test connection principle, which can be used during testing. This description describes the test of the version intended for one bay.

Figure 52 shows the general test connection for a breaker-and-a-half diameter with one-phase voltage connected to the line side.

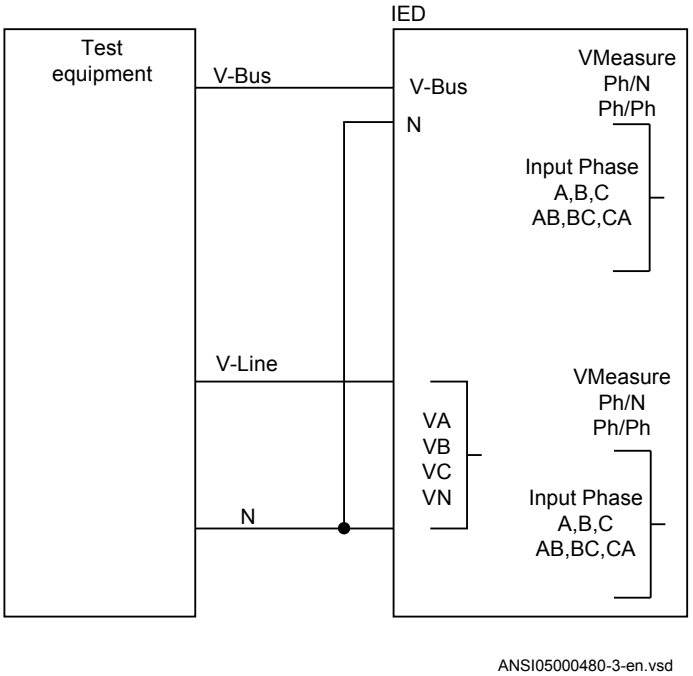

Figure 51: General test connection with three-phase voltage connected to the line side

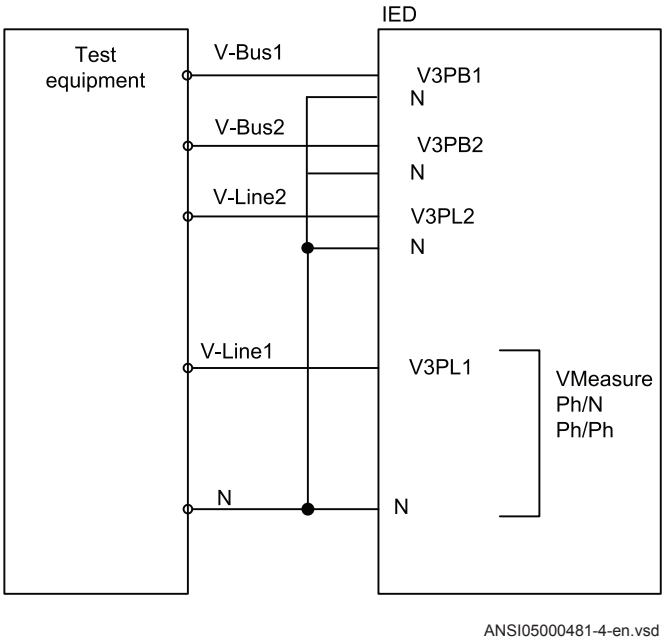

Figure 52: General test connection for a breaker-and-a-half diameter with one-phase voltage connected to the line side

12.10.1.1 Testing the synchronizing function

The voltage inputs used are:

V3PL1	VA, VB or VC line 1 voltage inputs on the IED
V3PBB1	Bus1 voltage input on the IED

Testing the frequency difference

The frequency difference test should verify that operation is achieved when the frequency difference between bus and line is less than set value of *FreqDiffMax*and above set value of *FreqDiffMin*. The test procedure below will depend on the settings used. Input STARTSYN must be activated during the test.

FreqDiffMax = 50.2 Hz

FreqDiffMin = 50.01 Hz

tBreaker = 0.080 s

1. Apply voltages
   1.1. V-Line = 100% *VBaseLine* and f-Line = 60.0 Hz
   1.2. V-Bus = 100% *VBaseBus* and f-Bus = 60.15Hz
2. Check that a closing pulse is submitted at a closing angle equal to calculated phase angle value from the formula below. Modern test sets will evaluate this automatically.
   Closing Angle = $|((f_{Bus} – f_{Line}) * tBreaker * 360 \text{ degrees}) |$
   f_{Bus}= Bus frequency
   f_{Line}= Line frequency
   tBreaker = Set closing time of the breaker
3. Repeat with
   3.1. V-Bus = 100% *VBaseBus* and f-bus = 60.25 Hz, to verify that the function does not operate when frequency difference is above limit.
4. Verify that the closing command is not issued when the frequency difference is less than the set value *FreqDiffMin*.

12.10.1.2 Testing the synchrocheck check

During the test of SESRSYN (25) for a single bay arrangement, these voltage inputs are used:

V-Line	VA, VB or VC line 1 voltage input on the IED according to the connection in SMT
V-Bus	V5 voltage input on the IED according to the connection in SMT

Testing the voltage difference

Set the voltage difference to 0.15 p.u. on the local HMI, and the test should check that operation is achieved when the voltage difference *VDiffSC* is lower than 0.15 p.u.

The settings used in the test shall be final settings. The test shall be adapted to site setting values instead of values in the example below.

Test with no voltage difference between the inputs.

Test with a voltage difference higher than the set *VDiffSC*.

1. Apply voltages V-Line (for example) = 80% *GblBaseSelLine* and V-Bus = 80% *GblBaseSelBusGblBaseSelBus* with the same phase-angle and frequency.
2. Check that the AUTOSYOK and MANSYOK outputs are activated.
3. The test can be repeated with different voltage values to verify that the function operates within the set *VDiffSC*. Check with both V-Line and V-Bus respectively lower than the other.
4. Increase the V-Bus to 110% *GblBaseSelBus*, and the V-Line = 90% *GblBaseSelLine* and also the opposite condition.
5. Check that the two outputs for manual and auto synchronism are not activated.

Testing the phase angle difference

The phase angle differences *PhaseDiffM* and *PhaseDiffA* respectively are set to their final settings and the test should verify that operation is achieved when the phase angle difference is lower than this value both leading and lagging.

Test with no voltage difference.

1. Apply voltages V-Line (for example) = 100% *GblBaseSelLine* and V-Bus = 100% *GblBaseSelBus*, with a phase difference equal to 0 degrees and a frequency difference lower than *FreqDiffA* and *FreqDiffM*.
2. Check that the AUTOSYOK and MANSYOK outputs are activated.
   The test can be repeated with other phase difference values to verify that the function operates for values lower than the set ones, *PhaseDiffM* and *PhaseDiffA*. By changing the phase angle on the voltage connected to V-Bus, between ± dφ degrees, the user can check that the two outputs are activated for a phase difference lower than the set value. It should not operate for other values. See figure 53.

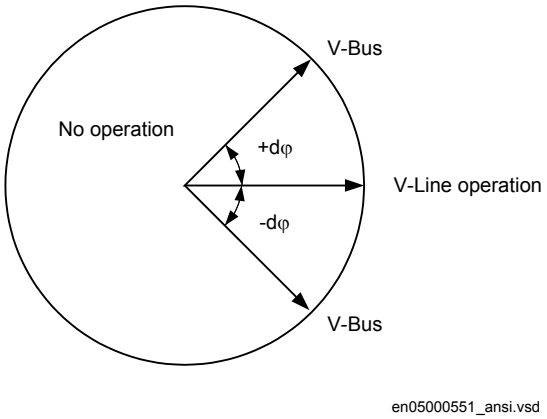

Figure 53: Test of phase difference

3. Change the phase angle between +dφ and -dφ and verify that the two outputs are activated for phase differences between these values but not for phase differences outside, see figure 53.

Testing the frequency difference

The frequency difference test should verify that operation is achieved when the *FreqDiffA* and *FreqDiffM* frequency difference is lower than the set value for manual and auto synchronizing check, *FreqDiffA* and *FreqDiffM* respectively and that operation is blocked when the frequency difference is greater.

Test with frequency difference = 0 mHz

Test with a frequency difference outside the set limits for manual and auto synchronizing check respectively.

1. Apply voltages V-Line equal to 100% *GblBaseSelLine* and V-Bus equal to 100% *GblBaseSelBus*, with a frequency difference equal to 0 mHz and a phase difference lower than the set value.
2. Check that the AUTOSYOK and MANSYOK outputs are activated.
3. Apply voltage to the V-Line equal to 100% *GblBaseSelLine* with a frequency equal to 50 Hz and voltage V-Bus equal to 100% *GblBaseSelBus*, with a frequency outside the set limit.
4. Check that the two outputs are not activated. The test can be repeated with different frequency values to verify that the function operates for values lower than the set ones. If a modern test set is used, the frequency can be changed continuously.

Testing the reference voltage

1. Use the same basic test connection as in figure 51.

The voltage difference between the voltage connected to V-Bus and V-Line should be 0%, so that the AUTOSYOK and MANSYOK outputs are activated first.

2. Change the V-Line voltage connection to V-Line2 without changing the setting on the local HMI. Check that the two outputs are not activated.

12.10.1.3 Testing the energizing check

During the test of the energizing check function for a single bay arrangement, these voltage inputs are used:

V-Line	VA, VB or VC line1 voltage inputs on the IED
V-Bus	Bus voltage input on the IED

General

When testing the energizing check function for the applicable bus, arrangement shall be done for the energizing check functions. The voltage is selected by activation of different inputs in the voltage selection logic.

Live voltage level is fixed to 80% *VBase* and dead voltage level to fixed 40% *VBase*.

The test shall be performed according to the settings for the station. Test the alternatives below that are applicable.

Testing the dead line live bus (DLLB)

The test should verify that the energizing check function operates for a low voltage on the V-Line and for a high voltage on the V-Bus. This corresponds to the energizing of a dead line to a live bus.

1. Apply a single-phase voltage 100% *GblBaseSelBus* to the V-Bus, and a single-phase voltage 30% *GblBaseSelLine* to the V-Line.
2. Check that the AUTOENOK and MANENOK outputs are activated after set *tAutoEnerg* respectively *tManEnerg*.
3. Increase the V-Line to 60% *GblBaseSelLine* and V-Bus to be equal to 100% *GblBaseSelBus*. The outputs should not be activated.
4. The test can be repeated with different values on the V-Bus and the V-Line.

Testing the dead bus live line (DBLL)

The test should verify that the energizing check function operates for a low voltage on the V-Bus and for a high voltage on the V-Line. This corresponds to an energizing of a dead bus to a live line.

1. Verify the settings *AutoEnerg* or *ManEnerg* to be *DBLL*.
2. Apply a single-phase voltage of 30% *GblBaseSelBus* to the V-Bus and a single-phase voltage of 100% *GblBaseSelLine* to the V-Line.
3. Check that the AUTOENOK and MANENOK outputs are activated after set *tAutoEnerg* respectively *tManEnerg*.
4. Decrease the V-Line to 60% *GblBaseSelLine* and keep the V-Bus equal to 30% *GblBaseSelBus*. The outputs should not be activated.
5. The test can be repeated with different values on the V-Bus and the V-Line.

Testing both directions (DLLB or DBLL)

1. Verify the local HMI settings *AutoEnerg* or *ManEnerg* to be *Both*.
2. Apply a single-phase voltage of 30% *GblBaseSelLine* to the V-Line and a single-phase voltage of 100% *GblBaseSelBus* to the V-Bus.
3. Check that the AUTOENOK and MANENOK outputs are activated after set *tAutoEnerg* respectively *tManEnerg*.
4. Change the connection so that the V-Line is equal to100% *GblBaseSelLine* and the V-Bus is equal to 30% *GblBaseSelBus*. The outputs should still be activated.
5. The test can be repeated with different values on the V-Bus and the V-Line.

Testing the dead bus dead line (DBDL)

The test should verify that the energizing check function operates for a low voltage on both the V-Bus and the V-Line, that is, closing of the breaker in a non-energized system. Test is valid only when this function is used.

1. Verify the local HMI setting *AutoEnerg* to be *Disabled* and *ManEnerg* to be *DBLL*.
2. Set the parameter *ManEnergDBDL* to *Enabled*.
3. Apply a single-phase voltage of 30% *GblBaseSelBus* to the V-Bus and a single-phase voltage of 30% *GblBaseSelLine* to the V-Line.
4. Check that the MANENOK output is activated after set *tManEnerg*.
5. Increase the V-Bus to 80% *GblBaseSelBus* and keep the V-Line equal to 30% *GblBaseSelLine*. The outputs should not be activated.
6. Repeat the test with *ManEnerg* set to *DLLB* with different values on the V-Bus and the V-Line voltage.

12.10.1.4 Testing the voltage selection

Testing the voltage selection for single CB arrangements

This test should verify that the correct voltage is selected for the measurement in the SESRSYN function used in a double-bus arrangement. Apply a single-phase voltage of 100% *GblBaseSelLine* to the V-Line and a single-phase voltage of 100% *GblBaseSelBus* to the V-Bus.

If the VB1/2OK inputs for the fuse failure are used, they must be activated, during tests below. Also verify that deactivation prevents operation and gives an alarm.

1. Connect the signals above to binary inputs and binary outputs.
2. Connect the voltage inputs to the analog inputs used for each bus or line depending of the type of busbar arrangement and verify that correct output signals are generated.

Testing the voltage selection for double breaker

This test should verify that correct voltage is selected for the measurement in the SESRSYN function used for a diameter in a Breaker-and-a-half arrangement. Apply a single-phase voltage of 100% *GblBaseSelLine* to the V-Line and a single-phase voltage of 100% *GblBaseSelBus* to the V-Bus. Verify that correct output signals are generated.

1. Connect the analog signals to the voltage inputs, in pair of two for V1 and V2. (Inputs V3PB1, V3PB2, V3PL1, V3PL2)
2. Activate the binary signals according to the used alternative. Verify the measuring voltage on the synchronizing check function SESRSYN (25). Normally it can be good to verify synchronizing check with the same voltages and phase angles on both voltages. The voltages should be verified to be available when selected and not available when another input is activated so connect only one voltage transformer reference at each time.
3. Record the voltage selection tests in a matrix table showing read values and AUTOSYOK/MANSYOK signals to document the test performed.

Testing the voltage selection for 1 1/2 CB arrangements

At test of the SESRSYN (25) function for a breaker-and-a-half diameter the following alternative voltage inputs can be used for the three SESRSYN (SESRSYN 1, SESRSYN 2, SESRSYN 3) functions. These three SESRSYN functions can either be in one, two or three different IEDs. Table 17 describes the scenario when SESRSYN 1, SESRSYN 2 and SESRSYN 3 all are in the same IED. If SESRSYN 3 is in another IED, WA1 will be considered as WA2 and LINE2 as LINE1. The voltage is selected by activation of different inputs in the voltage selection logic as shown in table 17 and figure 54.

Table 17: Voltage selection logic

SESRSYN	CBConfig setting	Section to be synchronized	Activated B1QCLD input on IED from	Activated B2QCLD input on IED from	Activated LN1QCLD input on IED from	Activated LN2QCLD input on IED from	Indication from SESRSYN on IED
SESRSYN 1 (Operates on CB1 52)	breaker-and-a-half bus CB	Bus1 – Line1			LN1 989		B1SEL, LN1SEL
		Bus1 – Line2	CB2 252			LN2 989	B1SEL, LN2SEL
		Bus1 – Bus2	CB2 252	CB3 352			B1SEL, B2SEL
SESRSYN 2 (Operates on CB2 252)	Tie CB	Line1 – Line2			LN1 989	LN2 989	LN1SEL, LN2SEL
		Bus1 – Line2	CB1 52			LN2 989	B1SEL, LN2SEL
		Bus2 – Line1		CB3 352	LN1 989		B2SEL, LN1SEL
		Bus1 – Bus2	CB1 52	CB3 352			B1SEL, B2SEL
SESRSYN 3 (Operates on CB3 352)	breaker-and-a-half bus alt. CB (mirrored)	Bus2 – Line2				LN2 989	B2SEL, LN2SEL
		Bus2 – Line1	CB2 252		LN1 989		B2SEL, LN1SEL
		Bus2 – Bus1	CB2 252	CB1 52			B1SEL, B2SEL

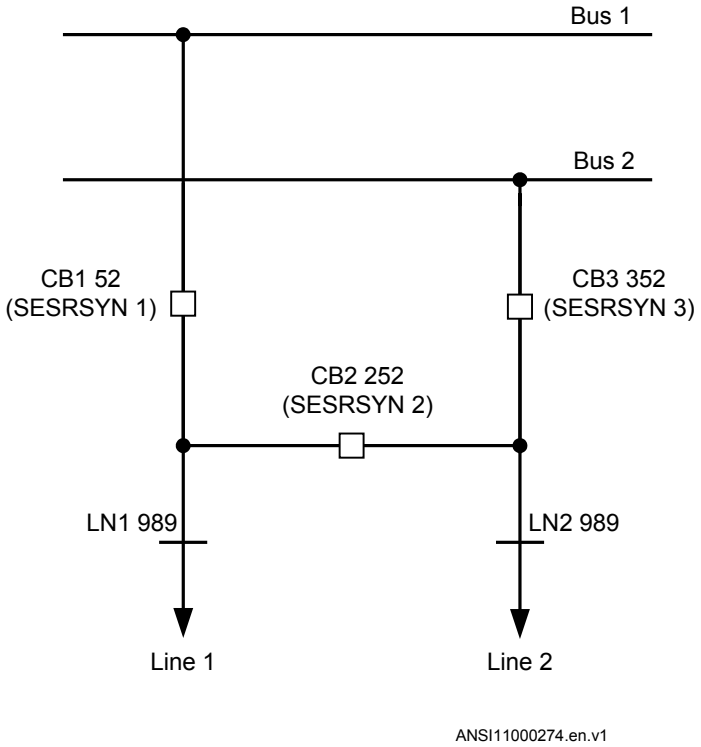

Figure 54: Objects used in the voltage selection logic

12.10.1.5 Completing the test

Continue to test another function or end the test by changing the *TestMode* setting to *Disabled*. Restore connections and settings to their original values, if they were changed for testing purposes.

12.10.2 Apparatus control APC

The apparatus control function consists of four types of function blocks, which are connected in a delivery-specific way between bays and to the station level. For that reason, test the total function in a system, that is, either in a complete delivery system as an acceptance test (FAT/SAT) or as parts of that system.

If a block/unblock command is sent from remote to function, while the IED is shut down, this command will not be recognized after the start up, thus the command that was sent prior to the shut down is used. In such cases, where there is a mismatch, the user is advised to make a complete cycle of block/unblock operations to align the statuses.

12.10.3 Voltage control (VCTR) TR1ATCC, TR8ATCC, TCMYLTC, TCLYLTC

Prepare the IED for verification of settings outlined in section "Preparing the IED to verify settings".

The automatic voltage control for tap changer, single control TR1ATCC (90) is based on a transformer configuration that consists of one tap changer on a single two-winding power transformer.

The automatic voltage control for tap changer, parallel control TR8ATCC (90), if installed, may be set to operate in Master Follower (MF) mode, or Minimise Circulating Current (MCC) mode. The commissioning tests for each parallel control mode are addressed separately in the following procedure.

Secondary injection of load current (I_L) and secondary bus voltage (UB) equivalent quantities are required during installation and commissioning tests. The test consists mainly of:

1. Increasing or decreasing the injected voltage or current at the analogue inputs of the IED.
2. Checking that the corresponding commands (Lower or Raise) are issued by the voltage control function.

Setting confirmation is an important step for voltage control in the installation and commissioning phase to ensure consistency of power systems base quantities, alarm/blocking conditions and parallel control settings for each transformer control function.

Before starting any test, verify the following settings in PCM600 or the local HMI for TR1ATCC (90), TR8ATCC (90) and TCMYLTC (84) and TCLYLTC (84).

- Confirm power system base quantities *I1Base*, *I2Base*, VBase.

Main menu/Settings/Setting Group N/Control/ TransformerVoltageControl(ATCC,90)/TR1ATCC:x/TR8ATCC:x/General

and

Main menu/Settings/Setting Group N/Control/ TransformerVoltageControl(ATCC,90)/TR1ATCC:x

.

- Confirm that the setting for short circuit impedance *Xr2* for TR1ATCC (90) or TR8ATCC (90) is in accordance with transformer data:

- Short circuit impedance, available on the local HMI under **Main menu/ Settings/General settings/Control/TransformerVoltageControl(ATCC, 90)/TR1ATCC:x/TR8ATCC:x/Xr2**.

- Confirm that the setting for TCMYLTC (84) or TCLYLTC (84) is in accordance with transformer data:
  - Tap change timeout duration - effectively the maximum transformer tap change time, *tTCTimeout*, available on the local HMI under **Main menu/ Settings/Setting Group N/Control/TransformerTapControl(YLTC,84)/ TCMYLTC:x/TCLYLTC:x/tTCTimeout**.
  - Load tap changer pulse duration - required length of pulse from IED to load tap changer, *tPulseDur*, available on the local HMI under **Main menu/ Settings/Setting Group N/Control/TransformerTapControl(YLTC,84)/ TCMYLTC:x/TCLYLTC:x/tPulseDur**.
  - Transformer tap range, *LowVoltTap* and *HighVoltTap*, available on the local HMI under **Main menu/Settings/General Settings/Control/ TransformerTapControl(YLTC,84)/TCMYLTC:x/TCLYLTC:x/ HighVoltTap** and .
  - Load tap changer code type - method for digital feedback of tap position, *CodeType*, available on the local HMI under **Main menu/Settings/ General settings/Control/TransformerTapControl(YLTC,84)/TCMYLTC:x/ TCLYLTC:x/CodeType**.

During the installation and commissioning, the behavior of the voltage control functions for different tests may be governed by a parameter group, available on the local HMI under **Main menu/Settings/General settings/Control/TransformerVoltageControl(ATCC,90)/ TR1ATCC:x/TR8ATCC:x**. These parameter settings can cause a Total Block, Automatic Block or Alarm for a variety of system conditions including over and under voltage, over current and tap changer failure. It is important to review these settings and confirm the intended response of the voltage control function for different secondary injection tests.

Terminology

The busbar voltage VB is a shorter notation for the measured voltages Va, Vb, Vc or Vij, where Vij is the phase-phase voltage, Vij = Vi -Vj, or Vi, where Vi is one single-phase-to-ground voltage.

I_L is a shorter notation for the measured load current; it is to be used instead of the three-phase quantities Ia, Ib, Ic or the two-phase quantities Ii and Ij, or single-phase current Ii.

Also note that for simplicity, the Parameter Setting menu structures included in the following procedure are referred to universally as VCP1, for example, **Main menu/Settings/Setting Group N/Control/TransformerVoltageControl(ATCC,90)/TR1ATCC:x/TR8ATCC:x/Time/t1 and t2l**.

For cases where single-mode voltage control is implemented, the Parameter Setting menu structure includes TR1ATCC:1 instead of the parallel designator TR8ATCC:1.

12.10.3.1 Secondary test

The voltage control function performs basic voltage regulation by comparing a calculated load voltage (V_L) against a voltage range defined by setting *VDeadband* (with upper and lower limits V2 and V1 respectively). The calculated load voltage V_L represents the secondary transformer bus voltage VB adjusted for Load drop compensation (LDC) where enabled in settings.

Note that when LDC is disabled, VB equals V_L.

When the load voltage V_L stays within the interval between V1 and V2, no action will be taken.

If $V_L < V1$ or $V_L > V2$, a command timer will start, which is constant time or inverse time defined by setting *t1* and *t1Use*. The command timer will operate while the measured voltage stays outside the inner deadband (defined by setting *VDeadbandInner*).

If V_L remains outside of the voltage range defined by *VDeadband* and the command timer expires, the voltage control will execute a raise or lower command to the transformer tap changer. This command sequence will be repeated until V_L is brought back within the inner deadband range.

12.10.3.2 Check the activation of the voltage control operation

1. Confirm *Transformer Tap Control = Enable* and *Transformer Voltage Control = Enable*
   - Direct tap change control

   Main menu/Settings/Setting Group N/Control/TransformerTapChanger(YLTC,84)/TCMYLTC:x/TCLYLTC:x/Operation

- Automatic transformer voltage control

Main menu/Settings/Setting Group N/Control/ TransformerVoltageControl(ATCC,90)/TR1ATCC:x/TR8ATCC:x/General/ Operation

- Enable Tap Command

Main menu/Settings/General settings/Control/ TransformerTapChanger(YLTC,84)/TCMYLTC:x/TCLYLTC:x/ EnabTapCmd

While the test set is connected to the IED but no voltage is applied, the voltage control functions will detect an undervoltage condition that may result in an alarm or blocking of the voltage-control operation. These conditions will be shown on the local HMI.

2. Apply the corresponding voltage
   Confirm the analog measuring mode prior to undertaking secondary injection (positive sequence, phase-to-phase, or phase-to-ground). This measuring mode is defined in the local HMI under **Main menu/Settings/Setting Group N/Control/ TransformerVoltageControl(ATCC,90)/TR1ATCC:x/TR8ATCC:x/General/ MeasMode**
   The application of nominal voltage *VSet* according to set *MeasMode* to the IEDs should cause the alarm or blocking condition for undervoltage to reset.

12.10.3.3 Check the normal voltage regulation function

1. Review the settings for *VDeadband* (based on percentage of nominal bus voltage) and calculate the upper (V2) and lower (V1) voltage regulation limits for which a tap change command will be issued.
2. Review the expected time for first (*t1*) and subsequent (*t2*) tap change commands from the voltage control function on the local HMI under **Main menu/Settings/ Setting Group N/Control/TransformerVoltageControl(ATCC,90)/ TR1ATCC:x/TR8ATCC:x/Time/t1 and t2l**
3. Lower the voltage 1% below V1 and wait for the issue of a Raise command from the voltage control after the expiry of a constant or inverse time delay set by *t1*. Detection of this command will involve locating the allocated binary output for a raise pulse command in the Signal Matrix in PCM600 and monitoring a positive from this output.
4. After the issue of the raise command, return the applied voltage to *VSet* (nominal value).
5. Raise the voltage 1% above the upper deadband limit V2 and wait for the issue of a lower command from the voltage control after the expiry of a constant or inverse time delay set by *t1*. Detection of this command will involve locating the

allocated binary output for a low pulse command in the Signal Matrix in PCM600 and monitoring a positive from this output.

6. Return the applied voltage to *VSet*.

12.10.3.4 Check the undervoltage block function

1. Confirm the setting for *Vblock*, nominally at 80% of rated voltage.
2. Confirm the voltage control function response to an applied voltage below *Vblock*, by reviewing the setting in the local HMI under **Main menu/Settings/General settings/Control/TransformerVoltageControl(ATCC,90)/TR1ATCC:x/TR8ATCC:x/UVBk** that may cause an alarm, total or automatic block of the voltage control function to be displayed on the local HMI.
3. Apply a voltage slightly below *Vblock* and confirm the response of the voltage control function.

12.10.3.5 Check the upper and lower busbar voltage limit

1. Confirm the settings for *Vmin* and *Vmax* in the local HMI under **Main menu/Settings/Setting group N/Control/TransformerVoltageControl(ATCC,90)/TR1ATCC:x/TR8ATCC:x/Voltage/Umax or Umin** and **Main menu/Settings/IED Settings/Control/TR8ATCC (90)/TR8ATCC:n/Voltage/Umax**
2. Confirm the voltage control function response to an applied voltage below *Vmin* and above *Vmax*, by reviewing the settings in the local HMI under **Main menu/Settings/General settings/Control/TransformerVoltageControl(ATCC,90)/TR1ATCC:x/TR8ATCC:x/UVPartBk** and **Main menu/General Settings/Control/TransformerVoltageControl/TR1ATCC:x/TR8ATCC:x/OVPartBk**. These conditions may cause an alarm or total block of the voltage control function to be displayed on the local HMI.
3. Decrease the injected voltage slightly below the *Vmin* value and check for the corresponding blocking or alarm condition on the local HMI. For an alarm condition, the voltage regulation function is not blocked and a raise command should be issued from the IED.
4. Increase the applied voltage slightly above the *Vmax* value and check for the corresponding blocking or alarm condition on the local HMI. For an alarm condition, the voltage regulation function is not blocked and a lower command should be issued from the IED.

12.10.3.6 Check the overcurrent block function

1. Confirm the setting for *Iblock* in the local HMI under **Main menu/Settings/ Setting group N/Control/TransformerVoltageControl(ATCC,91)/ TR1ATCC:x/TR8ATCC:x/TCCtrl/Iblock**
2. Confirm the voltage control function response to an applied current above *Iblock*, by reviewing the settings in the local HMI under **Main menu/Settings/General settings/Control/TransformerVoltageControl(ATCC,91)/TR1ATCC:x/ TR8ATCC:x/OVPartBk**. This condition may cause an alarm or total block of the voltage control function to be displayed on the local HMI.
3. Inject a current higher than the *Iblock* setting and confirm the alarm or blocking condition is present on the local HMI. If an automatic or total blocking condition occurs, change the applied secondary voltage and confirm that no tap change commands are issued from the associated binary outputs. This situation can also be confirmed through reviewing the disturbance and service reports on the local HMI.

12.10.3.7 Single transformer

Load drop compensation

1. Confirm that *OperationLDC* is set to *Enabled*.
2. Confirm settings for *Rline* and *Xline*.
3. Calculate the expected load voltage V_L (displayed as a measured value on the local HMI) based on secondary injection of transformer secondary voltage (VB = *VSet*) and rated load current (I_L = *I1Base*), in accordance with equation 116.

$$V_L = VB - (Rline + jXline) \cdot I_L$$

(Equation 116)

where:

V_L, I_L = Re(I_L) + jIm(I_L) are complex phase quantities

When all secondary phase-to-ground voltages are available, use the positive-sequence components of voltage and current. By separation of real and imaginary parts:

$$vl,re = vb,re - rline \cdot il,re + xline \cdot il,im$$

(Equation 117)

$$vl,im = vb,im - xline \cdot il,re - rline \cdot il,im$$

(Equation 118)

where:

vb	is the complex value of the busbar voltage
il	is the complex value of the line current (secondary side)
rline	is the value of the line resistance
xline	is the value of the line reactance

For comparison with the set-point value, the modulus of U_L are according to equation 119.

$$|V_L| = \sqrt{(vl, re)^2 + (vl, im)^2}$$

(Equation 119)

4. Inject voltage for VB equal to setting *VSet*.
5. Inject current equal to rated current *I2Base*.
6. Confirm on the local HMI that service values for bus voltage and load current are equal to injected quantities.
7. Confirm that the calculated value for load voltage, displayed on the local HMI, is equal to that derived through hand calculations.
8. When setting *OperationLDC* set to *Enabled*, the voltage regulation algorithm uses the calculated value for load voltage as the regulating quantity to compare against *VSet* and the voltage deadband limits *VDeadband* and *VDeadbandInner*.
9. While injecting rated current *I2Base* into the IED, inject a quantity for VB that is slightly higher then *VSet* + |(*Rline*+j*XLine*) · I_L|. This will ensure that the regulating voltage V_L is higher than *VSet*, and hence no tap change command should be issued from the IED.
10. Reduce the injected voltage for VB slightly below *VSet* + |(*Rline*+j*XLine*) · I_L| and confirm that the calculated value for load voltage is below *VSet* and a tap change command is issued from the IED.

12.10.3.8 Parallel voltage regulation

Master follower voltage regulation

1. For the transformers connected in the parallel group, confirm that *OperationPAR* is set to *MF*.
2. For parallel operation, it is also recommended to confirm for parallel group membership, defined by setting *TnRXOP* in the local HMI under **Main menu/**

Settings/Setting group N/Control/TransformerVoltageControl(ATCC,90)/ TR8ATCC:x/ParCtrl
The general parallel arrangement of transformers are defined by setting *TnRXOP* to *Enabled* or *Disabled*. The following rules are applicable on the settings *T1RXOP – T4RXOP*.
If IED *T1* and *T2* are connected,

- *T1RXOP* shall be set to *Enabled* in instance 2 of TR8ATCC (90),
- *T2RXOP* shall be set to *Enabled* in instance 3 of TR8ATCC (90),
- *T2RXOP* and *T3RXOP* shall be set to *Enabled* in instance 1 of TR8ATCC (90), and so on.

The parameter corresponding to the own IED **must not** be set. *T1RXOP* should thus not be set in IED *T1*, *T2RXOP* **not** in IED *T2*, and so on.

3. The lowest transformer number in the parallel group is by default set as the Master – confirm that this is the case by reviewing the setting in the local HMI.
4. Review the settings for *VDeadband* (based on percentage of nominal bus voltage) and calculate the upper (V2) and lower (V1) voltage regulation limits for which a tap change command will be issued from the master transformer in the group.
5. Review the expected time for first (*t1*) and subsequent (*t2*) tap change commands from the master transformer in the local HMI under **Main menu/Settings/Setting group N/Control/TransformerVoltageControl(ATCC,90)/TR1ATCC:x/ TR8ATCC:x/Time/t1 and t2**
6. Apply a voltage 1% below V1 and wait for the issue of a raise command from the voltage control after the expiry of a constant or inverse time delay set by *t1*. Detection of this command will involve locating the allocated binary output for a raise command in the Signal Matrix in PCM600 and monitoring a positive from this output. Confirm the timing of this command correlates with the setting *t1*.
7. After the issue of the raise command, confirm that all follower transformers in the group change tap in accordance with the command issued from the master transformer.
8. Inject a voltage VB for the master transformer that is 1% above the upper deadband limit V2 and wait for the issue of a lower command from the voltage control after the expiry of a constant or inverse time delay set by *t2*.
9. Confirm that all follower transformers in the group change tap in accordance with this command.

Circulating current voltage regulation

This instruction for confirmation of circulating current voltage regulation assumes two transformers in the parallel group. Setting confirmation through secondary injection requires calculation of circulating currents for each transformer based on impedance

values and respective compensating factors, and is therefore more complex for greater than two transformers.

1. Confirm that *OperationPAR* is set to *CC* for the transformers in the parallel group.
2. For parallel operation, it is also recommended that settings be confirmed for parallel group membership, governed by setting *TnRXOP* in the local HMI under **Main menu/Settings/Setting group N/Control/ TransformerVoltageControl(ATCC,90)/TR8ATCC:x/ParCtrl**
   The general parallel arrangement of transformers are defined by setting *TnRXOP* to *Enabled* or *Disabled*. The following rules are applicable on the settings *T1RXOP* - *T4RXOP*.
   If IED *T1* and *T2* are connected,
   - *T1RXOP* shall be set to *Enabled* in instance 2 of TR8ATCC (90), and
   - *T2RXOP* shall be set to *Enabled* in instance 1 of TR8ATCC (90).

   If *T1* - *T3* are available,
   - *T1RXOP* and *T2RXOP* shall be set to *Enabled* in instance 3 of TR8ATCC (90),
   - *T2RXOP* and *T3RXOP* shall be set to *Enabled* in instance 1 of TR8ATCC (90) and so on.

   The parameter corresponding to the own IED **must not** be set. *T1RXOP* should thus **not** be set in IED *T1*, *T2RXOP***not** in IED *T2* and so on.

3. Review the settings for *VDeadband* (based on percentage of nominal bus voltage) and calculate the upper (V2) and lower (V1) voltage regulation limits for which a tap change command will be issued from the master transformer in the group.
4. Review the expected time for first (*t1*) and subsequent (*t2*) tap change commands from the master transformer in the local HMI under **Main menu/Settings/Setting group N/TransformerVoltageControl(ATCC,90)/TR1ATCC:x/TR8ATCC:x/ Time/t1 and t2**
5. Inject a voltage VB equal to *VSet* for each transformer.
6. Inject a load current for Transformer 1 that is equal to rated load current *I2Base* and a load current for Transformer 2 that is equal to 95% of rated load current *I2Base*. This will have the effect of producing a calculated circulating current that flows from HV to LV side for Transformer 1 and LV to HV side for Transformer 2.
7. Confirm that a circulating current is measured on the local HMI that is equal in magnitude to 5% of *I2Base*, with polarity as discussed in step 6.
8. Confirm the settings for C*i* (Compensation Factor) and X*i* (Transformer Short Circuit Impedance). Using these setting values and the measured quantity of

circulating current from the local HMI (I*cc_i*), calculate the value for circulating current voltage adjustment V*ci*.

$$Vdi = Ci \cdot Icc\_i \cdot Xi$$

(Equation 120)

The voltage regulation algorithm then increases (for transformer *T2*) or decreases (for transformer *T1*) the measured voltage by Vdi and compares Vi against the voltage deadband limits V1 and V2 for the purposes of voltage regulation.

$$Vi = VB + Vdi$$

(Equation 121)

9. To cause a tap change, the calculated value for circulating current voltage adjustment must offset the injected quantity for bus voltage VB so that Vi is outside the voltage deadband created by setting *VDeadband*. Expressed by equation 122 and equation 123.

$$Vdi > V2 - VB$$

(Equation 122)

$$VB = Vset$$ (for the purposes of this test procedure)

(Equation 123)

Therfore:

$$Ci \cdot Icc\_i \cdot Xi > V2 - Vset$$

(Equation 124)

$$|Icc\_i| > \left(V2 - Vset\right) \Big/ \left(Ci \cdot Xi\right)$$

(Equation 125)

10. Using the settings for *VSet*, *VDeadband*, C (Compensating factor) and *Xr2* (transformer short circuit impedance) calculate the magnitude of Icc_*i* necessary to cause a tap change command.
11. Inject current equal to *I2Base* for Transformer 1 and (*I2Base* - |Icc_*i*|) for Transformer 2 so that the magnitude of calculated circulating current will cause a raise command to be issued for Transformer 2 and a lower command for

Transformer 1. Magnitude and direction of circulating currents measured for each transformer can be observed as service values on the local HMI and raise/lower commands detected from the binary output mapped in the Signal Matrix.

The voltage injection equal to *VSet* is required for both transformers during this test.

12. Confirm that a tap change command is issued from the voltage control function to compensate for the circulating current.
13. Injected currents can be reversed such that the direction of calculated circulating currents change polarity, which will cause a lower command for Transformer 2 and a raise command for Transformer 1.

Circulating current limit

1. Confirm that *OperationPAR* is set to *CC* for each transformer in the parallel group.
2. Confirm that *OperCCBlock* is set to *Enable* for each transformer in the parallel group.
3. Review the setting for *CircCurrLimit*.
4. Review the setting for *CircCurrBk* to confirm whether a circulating current limit will result in an *Alarm* state, *Auto Block* or *Auto&Man Block* of the automatic voltage control for tap changer, for parallel control function TR8ATCC (90).
5. Inject a voltage VB equal to *VSet* for each transformer.
6. Inject a load current for Transformer 1 that is equal to rated load current *I2Base* and a load current for Transformer 2 that is 1% less than (*I2Base* – (*I2Base* · CircCurrLimit))
7. Confirm that the automatic voltage control for tap changer, for parallel control function TR8ATCC (90) responds in accordance with the setting for *CircCurrBk*. Alarm and blocking conditions can be confirmed through interrogation of the event menu or the control menu on the local HMI.

VTmismatch during parallel operation

1. Confirm that *OperationPAR* is set to *MF* for each transformer in the parallel group.
2. Review the setting for *VTmismatch* and *tVTmismatch*.
3. Inject a voltage VB equal to *VSet* for Transformer 1 and a voltage less than (*VSet* – (*VTmismatch* · *VSet*)) for Transformer 2.
4. This condition should result in a *VTmismatch* which will mutually block the operation of the automatic voltage control for tap changer, parallel control function TR8ATCC (90) for all transformers connected in the parallel group, which can be confirmed through interrogation of the local HMI.
5. Confirm that the automatic voltage control for tap changer, parallel control function TR8ATCC (90) responds in accordance with the setting for *CircCurrBk*.

12.10.3.9 Completing the test

Continue to test another function or end the test by changing the *TestMode* setting to *Disabled*. Restore connections and settings to their original values, if they were changed for testing purposes.

12.10.4 Single command, 16 signals SINGLECMD

For the single command function block, it is necessary to configure the output signal to corresponding binary output of the IED. The operation of the single command function (SINGLECMD) is then checked from the local HMI by applying the commands with *Mode = Off*, *Steady* or *Pulse*, and by observing the logic statuses of the corresponding binary output. Command control functions included in the operation of different built-in functions must be tested at the same time as their corresponding functions.

12.10.5 Interlocking

Prepare the IED for verification of settings outlined in section "Preparing the IED to verify settings".

Values of the logical signals are available on the local HMI under **Main menu/Tests/Function status/Control/<Function>/<Function:1>**. The Signal Monitoring in PCM600 shows the same signals that are available on the local HMI.

The interlocking function consists of a bay-level part and a station-level part. The interlocking is delivery specific and is realized by bay-to-bay communication over the station bus. For that reason, test the function in a system, that is, either in a complete delivery system as an acceptance test (FAT/SAT) or as parts of that system.

12.11 Logic

12.11.1 Tripping logic, common 3-phase output SMPPTRC (94)

Prepare the IED for verification of settings outlined in section "Preparing the IED to verify settings".

This function is functionality tested together with other protection functions (line differential protection,ground-fault overcurrent protection, and so on) within the IED. It is recommended that the function is tested together with the autorecloser function, when built into the IED or when a separate external unit is used for reclosing purposes. The instances of SMPPTRC (94) are identical except for the name of the function

block SMPPTRC (94). The testing is preferably done in conjunction with the protection system and autoreclosing function.

12.11.1.1 Three-phase operating mode

1. Check that *AutoLock* and *TripLockout* are both set to *Disabled*.
2. Initiate a three-phase fault.
   An adequate time interval between the faults should be considered, to overcome a reset time caused by the possible activation of the Autorecloser function SMBRREC (79). The function must issue a three-pole trip in all cases, when trip is initiated by any protection or some other built-in or external function. The following functional output signals must always appear simultaneously: TRIP, TR_A, TR_B. TR_C and TR3P.

12.11.1.2 1ph/3ph operating mode

In addition to various other tests, the following tests should be performed. They depend on the complete configuration of an IED:

Procedure

1. Make sure that *TripLockout* and *AutoLock* are both set to *Disabled*.
2. Initiate different single-phase-to-ground faults one at a time.
3. Initiate different phase-to-phase and three-phase faults.
   Consider using an adequate time interval between faults, to overcome a reset time, which is activated by SMBRREC (79). A three-pole trip should occur for each separate fault and all of the trips. Functional outputs TRIP, all TR_A, TR_B, TR_C and TR3P should be active at each fault.

   No other outputs should be active.

4. Initiate a single phase-to-ground fault and switch it off immediately when the trip signal is issued for the corresponding phase. Initiate the same fault once again within the reset time of the used SMBRREC (79).
5. Initiate a single phase-to-ground fault and switch it off immediately when the trip signal is issued for the corresponding phase. Initiate the second single phase-to-ground fault in one of the remaining phases within the time interval, shorter than *tEvolvingFault* (default setting 2.0s) and shorter than the dead-time of SMBRREC (79), when included in the protection scheme.
   Check that the second trip is a three-pole trip and that a three-phase autoreclosing attempt is given after the three-phase dead time. Functional outputs TRIP, TR_A,

TR_B, TR_C and TR1P should be active during the first fault. No other outputs should be active. Functional outputs TRIP, all TR_A, TR_B, TR_C and TR3P should be active during second fault.

12.11.1.3 1ph/2ph/3ph operating mode

In addition to other tests, the following tests, which depend on the complete configuration of an IED, should be carried out.

Procedure

1. Make sure that *AutoLock* and *TripLockout* are both set to *Disabled*.
2. Initiate different single-phase-to-ground faults one at a time.
   Take an adequate time interval between faults into consideration, to overcome a reset time, which is activated by the autorecloser function SMBRREC (79). Only a single-pole trip should occur for each separate fault and only one of the trip outputs (TR_A, TR_B, TR_C) should be activated at a time. Functional outputs TRIP and TR1P should be active at each fault. No other outputs should be active.
3. Initiate different phase-to-phase faults one at a time.
   Take an adequate time interval between faults into consideration, to overcome a reset time which is activated by SMBRREC (79). Only a two-phase trip should occur for each separate fault and only corresponding two trip outputs (TR_A, TR_B, TR_C) should be activated at a time. Functional outputs TRIP and TR2P should be active at each fault. No other outputs should be active.
4. Initiate a three-phase fault.
5. Initiate a single phase-to-ground fault and switch it off immediately when the trip signal is issued for the corresponding phase. Initiate the same fault once again within the reset time of the used SMBRREC (79).
   A single-phase fault shall be given at the first fault. A three-pole trip must be initiated for the second fault. Check that the corresponding trip signals appear after both faults. Functional outputs TRIP, TR_A, TR_B, TR_C and TR1P should be active during first fault. No other outputs should be active. Functional outputs TRIP, all TR_A, TR_B, TR_C and TR3P should be active during second fault.
6. Initiate a single phase-to-ground fault and switch it off immediately when the trip signal is generated for the corresponding phase. Initiate the second single-phase-to-ground fault in one of the remaining phases within the time interval, shorter than *tEvolvingFault* (default setting 2.0s) and shorter than the dead-time of SMBRREC (79), when included in the protection scheme.
7. Check, that the output signals, issued for the first fault, correspond to a two-phase trip for included phases. The output signals generated by the second fault must correspond to the three-phase tripping action.

12.11.1.4 Circuit breaker lockout

The following tests should be carried out when the built-in lockout function is used in addition to possible other tests, which depends on the complete configuration of an IED.

1. Check that *AutoLock* and *TripLockout* are both set to *Disabled*.
2. Activate shortly the set lockout (SETLKOUT) signal in the IED.
3. Check that the circuit breaker lockout (CLLKOUT) signal is set.
4. Activate shortly thereafter, the reset lockout (RSTLKOUT) signal in the IED.
5. Check that the circuit breaker lockout (CLLKOUT) signal is reset.
6. Initiate a three-phase fault.
   A three- trip should occur and all trip outputs TR_A, TR_B, TR_C should be activated. Functional outputs TRIP and TR3P should be active at each fault. The output CLLKOUT should not be set.
7. Activate the automatic lockout function, set *AutoLock = Enabled* and repeat.
   Besides the TRIP outputs, CLLKOUT should be set.
8. Reset the lockout signal by activating the reset lockout (RSTLKOUT) signal.
9. Activate the trip signal lockout function, set *TripLockout = Enabled* and repeat.
   All trip outputs (TR_A, TR_B, TR_C) and functional outputs TRIP and TR3P must be active and stay active after each fault, CLLKOUT should be set.
10. Reset the lockout.
    All functional outputs should reset.
11. Deactivate the TRIP signal lockout function, set *TripLockout = Disabled* and the automatic lockout function, set *AutoLock = Disabled*.

12.11.1.5 Completing the test

Continue to test another function or end the test by changing the *TestMode* setting to *Disabled*. Restore connections and settings to their original values, if they were changed for testing purposes.

12.11.2 Integrator TIGAPC

The integrator function TIGAPC can be tested by connecting a binary signal to the input of the function and applying pulses to the function. Normally the Integrator will be tested when testing the function the integrator is connected to, such as reverse power, loss of excitation and pole slip. When the function is configured, test it together with the function that operates it.

12.11.2.1 Completing the test

Continue to test another function or end the test by changing the Test mode setting to *Disabled*. Restore connections and settings to their original values, if they were changed for testing purposes.

12.12 Monitoring

12.12.1 Gas medium supervision SSIMG

Prepare the IED for verification of settings as outlined in section "Testing the liquid medium supervision for alarm and lock out conditions" and section "Completing the test" in this chapter.

Check that the input logical signal `BLOCK` is logical zero and that on the local HMI, the logical signals `PRES_ALM`, `PRES_LO`, `TEMP_ALM` and `TEMP_LO` are equal to logical zero.

12.12.1.1 Testing the liquid medium supervision for alarm and lock out conditions

1. Connect binary inputs to consider gas pressure and gas density to initiate the alarms.
2. Consider the analogue pressure input `PRESSURE` to initiate the alarms.
3. Gas pressure lock out input can be used to set `PRES_LO` signal, check the signal status in local HMI under **Main menu/Test/Function status/Monitoring/Gas medium supervision SSIMG/PRES_LO**
4. Reduce the pressure level input below *PresAlmLimit*, check for `PRES_ALM` signal status in local HMI under **Main menu/Test/Function status/Monitoring/Gas medium supervision SSIMG/PRES_ALM**
5. Activate `BLOCK` binary input, the signals `PRES_ALM`, `PRES_LO` should disappear.
6. Reset the `BLOCK` binary input.
7. Check for reset lock out input `RESET_LO` to reset `PRES_LO` lock out signal.
8. Conduct these steps for temperature input as well to detect and reset `TEMP_ALM` and `TEMP_LO` signals.
9. Continue to test another function or end the test by changing the *TestMode* setting to *off*.

12.12.1.2 Completing the test

Continue to test another function or end the test by changing the *TestMode* setting to *Off*. Restore connections and settings to their original values, if they were changed for testing purposes.

12.12.2 Liquid medium supervision SSIML

Prepare the IED for verification of settings as outlined in section "Liquid medium supervision SSIML" and section "Completing the test" in this chapter.

Check that the input logical signal `BLOCK` is logical zero and that on the local HMI, the logical signals `LVL_ALM`, `LVL_LO`, `TEMP_ALM` and `TEMP_LO` are equal to logical zero.

12.12.2.1 Testing the liquid medium supervision for alarm and lock out conditions

1. Connect the binary inputs to consider liquid level to initiate the alarms.
2. Consider the analogue level input `LEVEL` to initiate the alarms.
3. Liquid level lock out input can be used to set `LVL_LO` signal, check the signal status in local HMI under **Main menu/Test/Function status/Monitoring/Liquid medium supervision SSIML/LVL_LO**
4. Reduce the liquid level input below LevelAlmLimit, check for `LVL_ALM` signal status in local HMI under **Main menu/Test/Function status/Monitoring/Liquid medium supervision SSIML/LVL_ALM**
5. Activate `BLOCK` binary input, the signals `LVL_ALM`, `LVL_LO` should disappear.
6. Reset the `BLOCK` binary input.
7. Check for reset lock out input `RESET_LO` to reset the `LVL_LO` lock out signal.
8. Conduct these steps for temperature input as well to detect and reset `TEMP_ALM` and `TEMP_LO` signals.
9. Continue to test another function or end the test by changing the *TestMode* setting to *Off*.

12.12.2.2 Completing the test

Continue to test another function or end the test by changing the *TestMode* setting to *Off*. Restore connections and settings to their original values, if they were changed for testing purposes.

12.12.3 Breaker monitoring SSCBR

Prepare the IED for verification of settings outlined in section “Testing the IED operation”.

The Signal Monitoring tool in PCM600 shows the service values that are available on the Local HMI as well.

Values of the logical signals belong to the breaker monitoring are available on the local HMI under: **Main menu/Test/Function status/Monitoring/BreakerMonitoring/SSCBR:x**

12.12.3.1 Verifying the settings

1. Connect the test set for the injection of a three-phase current to the appropriate current terminals of the IED.
2. If current need to be injected for a particular test, it should be done in the phase selected by the *PhSel* parameter.
3. Follow the sequence for positioning the auxiliary contacts before testing:

POSCLOSE	0	1	0
POSOPEN	0	0	1

4. Test of CB contact travel time
   4.1. Test the set timing defined by *OpenTimeCorr*, *CloseTimeCorr*, *tTrOpenAlm* and *tTrCloseAlm*.
   4.2. Change the status of the auxiliary contacts such that travel time to open `TTRVOP` and travel time to close `TTRVCL` exceed the respective set values (*tTrOpenAlm* and *tTrCloseAlm*). The measured travel time for opening and closing is shown on `TTRVOP` and `TTRVCL` respectively.
   4.3. Check that `TRVTOPAL` and `TRVTCLAL` are activated.
5. Test of CB status
   5.1. Test the set current level defined by *AccStopCurr*.
   5.2. Check the `CLOSEPOS` output by changing the *POSOPEN* to *0* and *POSCLOSE* to *1*.
   5.3. Check the `OPENPOS` output by changing the *POSOPEN* to *1* and *POSCLOSE* to *0* and also inject the current in the selected phase slightly lower and higher than *AccStopCurr* set value. Only for a current lower than set *AccStopCurr* should activate the output `POSOPEN`.
   5.4. Check the circuit breaker is in `INVDPOS` if auxiliary contacts read same value or CB is open and inject the current in selected phase more than *AccStopCurr* set value.
6. Test of remaining life of CB

6.1. Test the set timing defined by*RatedOperCurr*, *RatedFltCurr*, *OperNoRated*, *OperNoFault*, *DirCoef*, *CBLifeAlmLevel*.
6.2. Vary the phase current in the selected phase from below rated operated current, *RatedOperCurr* to above rated fault current, *RatedFltCurr* of a breaker.
6.3. The remaining life of CB output `CBLIFEPH` is estimated when the CB is changed from closed to open position. Check that the output `CBLIFEPH` is decreased with a value that corresponds to the injected current.
6.4. `CBLIFEAL` is activated as soon as `CBLIFEPH` is below the set *CBLifeAlmLevel* value.

7. Test of accumulated energy
   7.1. Test the actual set values defined by *AccSelCal* to *Aux Contact*, *ContTrCorr* and *AlmAccCurrPwr*.
   7.2. Inject phase current in the selected phase such that its value is greater than set *AccStopCurr* value.
   7.3. When the breaker goes to open position, accumulated energy `IPOWPH` is calculated. The calculated value can be seen on the output `IPOWPH`.
   7.4. Alarm signal `IPOWALPH` appears when `IPOWPH` is greater than set *AlmAccCurrPwr* value.
   7.5. Lockout signal `IPOWLOPH` appears if `IPOWPH` exceeds further to the threshold value *LOAccCurrPwr*.
   7.6. Calculation of accumulated energy `IPOWPH` is stopped when injected current is lower than set *AccStopCurr* value.
8. Test of CB operation cycles
   8.1. Test the actual set values defined by *OperAlmLevel* and *OperLOLevel*.
   8.2. The operation counter, NOOPER is updated for every close-open sequence of the breaker by changing the position of auxiliary contacts *POSCLOSE* and *POSOPEN*.
   8.3. `OPERALM` is activated when NOOPER value exceeds the set *OperAlmLevel* value. The actual value can be read on the output `NOOPER`.
   8.4. `OPERLO` is activated when NOOPER value exceeds the set *OperLOLevel* value.
9. Test of CB spring charge monitoring
   9.1. Test the actual set value defined by *SpChAlmTime*.
   9.2. Enable `SPRCHRST` input. Also activate SPRCHRD after a time greater than set time *SpChAlmTime*.
   9.3. At this condition, `SPCHALM` is activated.
10. Test of CB gas pressure indication

10.1. Test the actual set value defined by*tDGasPresAlm* and *tDGasPresLO*.
10.2. The output `GPRESALM` is activated after a time greater than set time of *tDGasPresAlm* value if the input `PRESALM` is enabled.
10.3. The output `GPRESLO` is activated after a set time of *tDGasPresLO* value if the input `PRESLO` is enabled.

12.12.3.2 Completing the test

1. Continue to test another function or end the test by changing the *Test mode* setting to *Disabled*.
2. Restore connections and settings to their original values if they were changed for testing purposes.

12.12.4 Event function EVENT

Prepare the IED for verification of settings as outlined in section "Requirements" and section "Preparing for test" in this chapter.

During testing, the IED can be set when in test mode from PST. The functionality of the event reporting during test mode is set in the Parameter Setting tool in PCM600.

- Use event masks
- Report no events
- Report all events

In test mode, individual event blocks can be blocked from PCM600.

12.12.5 Limit counter L4UFCNT

The Limit counter function L4UFCNT can be tested by connecting a binary input to the counter and applying pulses to the counter. The speed of the pulses must not exceed the cycle time of the function. Normally the counter will be tested when testing the function that the counter is connected to, such as the trip function. When the function is configured, test it together with the function that operates it. Trig the function and check that the counter result corresponds to the number of operations.

12.12.5.1 Completing the test

Continue to test another function or end the test by changing the Test mode setting to *Off*. Restore connections and settings to their original values, if they were changed for testing purposes.

12.13 Metering

12.13.1 Pulse-counter logic PCFCNT

The test of the Pulse-counter logic function PCFCNT requires the Parameter Setting tool in PCM600 or an appropriate connection to the local HMI with the necessary functionality. A known number of pulses with different frequencies are connected to the pulse counter input. The test should be performed with settings *Operation* = *Enable* or *Operation* = *Disable* and the function blocked or unblocked. The pulse counter value is then checked in PCM600 or on the local HMI.

12.13.2 Function for energy calculation and demand handling ETPMMTR

Prepare the IED for verification of settings as outlined in section ”Overview “ and section ”Preparing for test“ in this chapter.

12.13.2.1 Verifying the settings

Common test equipment can be used to determine the injection of current and voltage and time measurement.

Verification of EAFACC & ERFACC output

1. Connect the test set for injection of three-phase currents and three phase voltage to the appropriate current and voltage terminals of the IED.
2. Ensure the instantaneous values of active and reactive power from CVMMXN function block are connected to ETPMMTR function block active and reactive power inputs.
3. Enable the *EnaAcc* setting and set *tEnergy* as 1 minute.
4. Activate the `STARTACC` input and supply the IED with three phase currents and voltages at their rated value.
5. Check that the `ACCINPRG` signal appears continuously.
6. Note the `EAFACC` and `ERFACC`value after 1 minute and compare it with calculated energy value.
7. Similarly check after each 1 minute whether the calculated integrated energy value and `EAFACC` and `ERFACC` outputs are matching.
8. After some time (multiple of minute) remove the current and voltage input from CVMMXN function block.
9. Check the `EAFACC` and `ERFACC` output in the next 1 minute cycle for the retaining the same value.

10. Activate STOPACC input after some time and supply the IED with same current and voltage.
11. Check that the ACCINPRG signal disappears immediately and EAFACC and ERFACC outputs also stop updating.
12. Similarly the testing can be done for EAFACC and ERFACC outputs by changing the power inputs directions through direction settings.

Verification of MAXPAFD & MAXPRFD outputs

1. Repeat the above test steps 1 to 2.
2. Set *tEnergy* setting as 1 minute and supply the IED with three phase currents and voltages at their rated value till 1 minute.
3. Check the MAXPAFD and MAXPRFD outputs after 1 minute and compare it with last 1 minute average power values.
4. Increase either three phase current or voltage above the last 1 minute value.
5. After 1 minute check the MAXPAFD and MAXPRFD whether it is showing the last 1 minute average power value as maximum.
6. Next 1 minute cycle reduce the current or voltage below previous value.
7. Check after 1 minute whether the MAXPAFD and MAXPRFD outputs are retaining the old maximum value.
8. Similarly the testing can be done for MAXPAFD and MAXPRFD outputs by changing the power inputs directions through direction settings.

Verification of EAFALM & ERFALM outputs

1. Repeat the above test steps 1 to 2.
2. Set *tEnergy* setting as 1 minute and supply the IED with three phase currents and voltages at their rated value till 1 minute.
3. Ensure that the active and reactive energy values are less than the *EALim* and *ERLim* setting default values respectively.
4. Check that EAFALM and ERFALM are low.
5. Increase the supply currents or voltage in next 1 minute cycle such that the active or reactive energy values are greater than the *EALim* and *ERLim* setting default values respectively.
6. Check that EAFALM and ERFALM are high after 1 minute.
7. Similarly the testing can be done for EARALM and ERRALM outputs by changing the power inputs directions through direction settings.

12.13.2.2 Completing the test

Continue to test another function or end the test by changing the *TestMode* setting to *Disabled*. Restore connections and settings to their original values, if they were changed for testing purposes.

12.14 Station communication

12.14.1 Multiple command and transmit MULTICMDRCV / MULTICMDSND

The multiple command and transmit function (MULTICMDRCV / MULTICMDSND) is only applicable for horizontal communication.

Test of the multiple command function block and multiple transmit is recommended to be performed in a system, that is, either in a complete delivery system as an acceptance test (FAT/SAT) or as parts of that system, because the command function blocks are connected in a delivery-specific way between bays and the station level and transmit.

Command and transmit function blocks included in the operation of different built-in functions must be tested at the same time as their corresponding functions.

12.15 Remote communication

12.15.1 Binary signal transfer BinSignReceive, BinSignTransm

Prepare the IED for verification of settings as outlined in section "Preparing the IED to verify settings".

To perform a test of Binary signal transfer function (BinSignReceive/BinSignTransm), the hardware (LDCM) and binary input and output signals to transfer must be configured as required by the application.

There are two types of internal self supervision of BinSignReceive/BinSignTransm

- The I/O-circuit board is supervised as an I/O module. For example it generates FAIL if the board is not inserted. I/O-modules not configured are not supervised.
- The communication is supervised and the signal COMFAIL is generated if a communication error is detected.

Status for inputs and outputs as well as self-supervision status are available from the local HMI under

- Self-supervision status: **Main menu/Diagnostics/Internal events**
- Status for inputs and outputs: **Main menu/Test/Function status**, browse to the function group of interest.
- Remote communication related signals: **Main menu/Test/Function status/ Communication/Remote communication**

Test the correct functionality by simulating different kind of faults. Also check that sent and received data is correctly transmitted and read.

A test connection is shown in figure 55. A binary input signal (BI) at End1 is configured to be transferred through the communication link to End2. At End2 the received signal is configured to control a binary output (BO). Check at End2 that the BI signal is received and the BO operates.

Repeat the test for all the signals configured to be transmitted over the communication link.

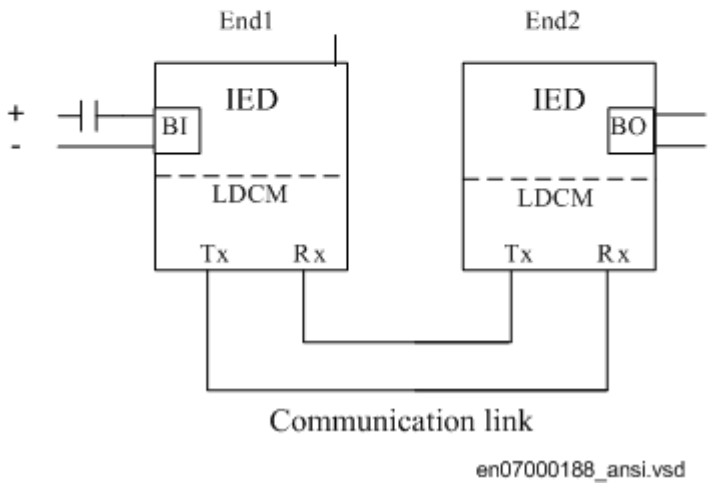

Figure 55: Test of RTC with I/O

12.16 Basic IED functions

12.16.1 Parameter setting group handling SETGRPS

Prepare the IED for verification of settings as outlined in section "Requirements" and section "Preparing for test" in this chapter.

12.16.1.1 Verifying the settings

1. Check the configuration of binary inputs that control the selection of the active setting group.
2. Browse to the **ActiveGroup** menu to achieve information about the active setting group.
   The **ActiveGroup** menu is located on the local HMI under**Main menu/Test/ Function status/Setting groups/ActiveGroup**
3. Connect the appropriate dc voltage to the corresponding binary input of the IED and observe the information presented on the local HMI.
   The displayed information must always correspond to the activated input.
4. Check that the corresponding output indicates the active group.
   Operating procedures for the PC aided methods of changing the active setting groups are described in the corresponding PCM600 documents and instructions for the operators within the SCS are included in the SCS documentation.

12.16.1.2 Completing the test

Continue to test another function or end the test by changing the *TestMode* setting to *Disabled*. Restore connections and settings to their original values, if they were changed for testing purposes.

12.17 Exit test mode

The following procedure is used to return to normal operation.

1. Navigate to the test mode folder.
2. Change the *Enable* setting to *Disable*. Press the 'E' key and the left arrow key.
3. Answer *YES*, press the 'E' key and exit the menus.

Section 13 Checking the directionality

13.1 Overview

Before starting this process, all individual devices that are involved in the fault clearance process of the protected object must have been individually tested and must be set in operation. The circuit breaker must be ready for an open-close-open cycle.

The directional test is performed when the protected object is energized and a certain amount of load current is available. It is also necessary to know the flow of the load current (import or export, i.e. forward or reverse) by help of the indication from an external instrument (energy-meter, or SCADA information).

The design of the test procedure depends on the type of protection function to be tested. Some items that can be used as guidelines are the following.

13.2 Testing the directionality of the distance protection

The test is performed by looking at the information given by the directional function ZDRDIR or ZDMRDIR.

Procedure:

1. Make sure that all control and protection functions that belong to the object that are going to be energized have been tested and are set to be in operation
2. Make sure that the primary load current fulfills the following conditions (by using an external equipment):
   - The magnitude of the primary load current must be higher than the minimum operating current set for the directional elements in the IED. In case of default settings this means:
     - load current > 5% of base current
     - Otherwise the settings *IMinOpPG* and *IMinOpPP* for ZDRDIR or ZDMRDIR are available under the HMI menu: **Main menu/Settings/ IED Settings/Impedance protection/DirectionalImpedance**

   The primary load impedance must have an angle (PHI) between the setting angles for the directional lines. In case of default settings this means:

- for forward (exported) load: -15 deg < PHI < 115 deg
- for reverse (imported) load: 165 deg < PHI < 295 deg

The settings for forward load: - *ArgDir* < PHI < *ArgNegRes* and the settings for reverse load: 180 deg - *ArgDir* < PHI < 180 deg + *ArgNegRes* included in the directional functions ZDRDIR or ZDMRDIR are available under the HMI menu:

- **Main menu/Settings/IED Settings/Impedance protection/ DirectionalImpedance**

3. The directionality of the load current is shown by the directional function ZDRDIR or ZDMRDIR and it is available under the HMI menu: **Main menu/Test/ Function status/Impedance protection/DirectionalImpedance**
   If the load current flows in forward (exporting) direction there will be shown:
   - L1Dir = forward
   - L2Dir = forward
   - L3Dir = forward

   If the load current flows in the reverse direction (importing) there will be shown:
   - L1Dir = reverse
   - L2Dir = reverse
   - L3Dir = reverse

   Compare this result with the information given by the external equipment, it must be the same. If the direction of the three phases is not the same, this is a sign of incorrect connection of the voltage or current transformers serving the distance protection function. It is also possible that there is a wrong setting for the earthing point for one or more of the CTs serving distance protection (the setting name is: *CTStarPoint*).
   If the directional function shows forward when it should show reverse (or vice-versa) for all the three phases, this probably means a wrong connection of CTs and/ or VTs serving the distance protection, or it can mean a wrong setting of earthing point (the setting name is : *CTStarPoint*) for all the three CTs, or it could mean a wrong setting for the pre-processing blocks (*3PhaseAnalogGroup*) connected to the CTs/VTs and serving the distance protection (verify that no wrong negation has been set; the setting name is: *Negation*).
   If the directional function shows “No direction” for all the three phases it can mean that the load current is below the minimum operating current or that the load impedance has an angle which is outside the above given valid angles for determining forward or reverse direction.
   If the directional function shows “No direction” for only some of the three phases, this probably means a wrong CTs/VTs connection.
4. The measured impedance information is available under the same menu. These values are not affected by the minimum operating current setting and the measured values are shown any time the load current is higher than 3% of the nominal current of the line:

- L1R
- L1X
- L2R
- L2X
- L3R
- L3X

The measured impedance information can still be used to determine the direction of the load. A positive resistance measured in all phases indicates a forward (exporting) resistive load (active power), while a negative sign indicates a reverse (importing) resistive load (active power). Usually it is enough to look at the resistive values to get information of the load direction, that must anyway be compared with the indication given by external equipment measuring the same power flow.

Section 14 Commissioning and maintenance of the fault clearing system

14.1 Commissioning tests

During commissioning all protection functions shall be verified with the setting values used at each plant. The commissioning tests must include verification of all circuits by highlighting the circuit diagrams and the configuration diagrams for the used functions.

Further, the settings for protection functions are tested and recorded carefully as outlined for the future periodic maintenance tests.

The final testing includes primary verification of all directional functions where load currents is checked on the local HMI and in PCM600. The magnitudes and angles of all currents and voltages should be checked and the symmetry verified.

Directional functions have information about the measured direction and, for example, measured impedance. These values must be checked and verified as correct with the export or import of power available.

Finally, final trip tests must be performed. This involves activation of protection functions or tripping outputs with the circuit breaker closed and the tripping of the breaker verified. When several breakers are involved, each breaker must be checked individually and it must be verified that the other involved breakers are not tripped at the same time.

14.2 Periodic maintenance tests

The periodicity of all tests depends on several factors, for example the importance of the installation, environmental conditions, simple or complex equipment, static or electromechanical IEDs, and so on.

The normal maintenance practices of the user should be followed. However, ABB's recommendation is as follows:

Every second to third year

- Visual inspection of all equipment.
- Removal of dust on ventilation louvres and IEDs if necessary.
- Periodic maintenance test for protection IEDs of object where no redundant protections are provided.

Every four to six years

- Periodic maintenance test for protection IEDs of objects with redundant protection system.

First maintenance test should always be carried out after the first half year of service.

When protection IEDs are combined with built-in control, the test interval can be increased drastically, up to for instance 15 years, because the IED continuously reads service values, operates the breakers, and so on.

14.2.1 Visual inspection

Prior to testing, the protection IEDs should be inspected to detect any visible damage that may have occurred (for example, dirt or moisture deposits, overheating).

Make sure that all IEDs are equipped with covers.

14.2.2 Maintenance tests

To be made after the first half year of service, then with the cycle as proposed above and after any suspected maloperation or change of the IED setting.

Testing of protection IEDs shall preferably be made with the primary circuit de-energized. The IED cannot protect the circuit during testing. Trained personnel may test one IED at a time on live circuits where redundant protection is installed and de-energization of the primary circuit is not allowed.

ABB protection IEDs are preferably tested by aid of components from the COMBITEST testing system or FT test systems described in information B03-9510 E. Main components are RTXP 8/18/24 test switch usually located to the left in each protection IED and RTXH 8/18/24 test handle, which is inserted in test switch at secondary testing. All necessary operations such as opening of trip circuits, short-circuiting of current circuits and opening of voltage circuits are automatically

performed in the right order to allow for simple and safe secondary testing even with the object in service.

Important components of FT test system are FT1, FTx, FT19, FT19RS, FR19RX switches and assemblies as well as FT-1 test plug.

14.2.2.1 Preparation

Before starting maintenance testing, the test engineers should scrutinize applicable circuit diagrams and have the following documentation available:

- Test instructions for protection IEDs to be tested
- Test records from previous commissioning and maintenance tests
- List of valid settings
- Blank test records to fill in measured values

14.2.2.2 Recording

It is of utmost importance to carefully record the test results. Special test sheets covering the frequency of test, date of test and achieved test values should be used. IED setting list and protocols from previous tests should be available and all results should be compared for differences. At component failures, spare equipment is used and set to the requested value. A note of the exchange is made and the new measured values are recorded. Test records for several years of testing should be stored in a common file for a station, or a part of a station, to give a simple overview of the period of testing and achieved test values. These test records are valuable when analysis of service disturbances shall be done.

14.2.2.3 Secondary injection

The periodic maintenance test is done by secondary injection from a portable test set. Each protection shall be tested according to the secondary injection test information for the specific protection IED. Only the setting values adopted shall be checked for each protection function. If the discrepancy between obtained value and requested set value is too big the setting should be adjusted, the new value recorded and a note should be made in the test record.

14.2.2.4 Alarm test

When inserting the test handle of RTXP or using FT plugs, the alarm and event signalling is normally blocked. This is done in the IED by setting the event reporting to *Disabled* during the test. This can be done when the test handle is inserted or the IED is set to test mode from the local HMI. At the end of the secondary injection test it

should be checked that the event and alarm signalling is correct by activating the events and performing some selected tests.

14.2.2.5 Self supervision check

Once secondary testing has been completed, it should be checked that no self-supervision signals are activated continuously or sporadically. Especially check the time synchronization system, GPS or other, and communication signals, both station communication and remote communication.

14.2.2.6 Trip circuit check

When the protection IED undergoes an operational check, a tripping pulse is normally obtained on one or more of the output contacts and preferably on the test switch. The healthy circuit is of utmost importance for the protection operation. If the circuit is not provided with a continuous trip-circuit supervision, it is possible to check that circuit is really closed when the test-plug handle has been removed by using a high-ohmic voltmeter and measuring between the plus and the trip output on the panel. The measurement is then done through the trip coil of the circuit breaker and therefore the complete trip circuit is checked.

Note that the breaker must be closed.

Please observe that the test system does not provide built-in security during this test. If the instrument should be set on Amp instead of Volts, the circuit breaker naturally is tripped, therefore, great care is necessary.

Trip circuit from trip IEDs to circuit breaker is often supervised by trip-circuit supervision. It can then be checked that a circuit is healthy by opening tripping output terminals in the cubicle. When the terminal is opened, an alarm shall be achieved on the signal system after a delay of some seconds.

Remember to close the circuit directly after the test and tighten the terminal carefully.

14.2.2.7 Measurement of service currents

After a maintenance test it is recommended to measure the service currents and service voltages recorded by the protection IED. The service values are checked on the local HMI or in PCM600. Ensure that the correct values and angles between voltages and currents are recorded. Also check the direction of directional functions such as Distance and directional overcurrent functions.

For transformer differential protection, the achieved differential current value is dependent on the tap changer position and can vary between less than 1% up to perhaps 10% of rated current. For line differential functions, the capacitive charging currents can normally be recorded as a differential current.

The zero-sequence current to ground-fault protection IEDs should be measured. The current amounts normally very small but normally it is possible to see if the current circuit is "alive".

The neutral-point voltage to an ground-fault protection IED is checked. The voltage is normally 0.1 to 1V secondary. However, voltage can be considerably higher due to harmonics. Normally a CVT secondary can have around 2.5 - 3% third-harmonic voltage.

14.2.2.8 Restoring

Maintenance is very important to improve the availability of the protection system by detecting failures before the protection is required to operate. There is however little point in testing healthy equipment and then putting it back into service with an open terminal, with a removed fuse or open miniature circuit breaker with an open connection, wrong setting, and so on.

Thus a list should be prepared of all items disturbed during test so that all can be put back into service quickly and without overlooking something. It should be put back into service item by item and signed by the responsible engineer.

Section 15 Troubleshooting

15.1 Checking the self supervision signals

15.1.1 Checking the self supervision function

15.1.1.1 Determine the cause of an internal failure

This procedure describes how to navigate the menus in order to find the cause of an internal failure when indicated by the flashing green LED on the HMI module.

Procedure

1. Display the general diagnostics menu.
   Navigate the menus to:
   Diagnostics/IED status/General
2. Scroll the supervision values to identify the reason for the failure.
   Use the arrow buttons to scroll between values.

15.1.2 Self supervision HMI data

Table 18: Signals from the General menu in the diagnostics tree.

Indicated result	Possible reason	Proposed action
Internal fail Off	No problem detected.	None.
Internal fail On	A failure has occurred.	Check the rest of the indicated results to find the fault.
Internal warning Off	No problem detected.	None.
Internal warning On	A warning has been issued.	Check the rest of the indicated results to find the fault.
Time synch Ready	No problem detected.	None.
Time synch Fail	No time synchronization.	Check the synchronization source for problems. If the problem persists, contact your ABB representative for service.
Real time clock Ready	No problem detected.	None.
Real time clock Fail	The real time clock has been reset.	Set the clock.
ADC-module OK	No problem detected.	None.
Table continues on next page		

Indicated result	Possible reason	Proposed action
ADC-module Fail	The AD conversion module has failed.	Contact your ABB representative for service.
(Protocol name) Ready	No problem detected.	None.
(Protocol name) Fail	Protocol has failed.	
(I/O module name) Ready	No problem detected.	None.
(I/O module name) Fail	I/O modules has failed.	Check that the I/O module has been configured and connected to the IOP1- block. If the problem persists, contact your ABB representative for service.

15.2 Fault tracing

15.2.1 Internal fault indications

If an internal fault has occurred, the local HMI displays information under **Main menu/ Diagnostics/IED status/General**

Under the Diagnostics menus, indications of a possible internal failure (serious fault) or internal warning (minor problem) are listed.

Indications regarding the faulty unit are outlined in table 19.

Table 19: Self-supervision signals on the local HMI

HMI Signal Name:	Status	Description
INT Fail	OFF / ON	This signal will be active if one or more of the following internal signals are active; INT--LMDERROR, INT--WATCHDOG, INT--APPERROR, INT--RTEERROR, or any of the HW dependent signals
INT Warning	OFF / ON	This signal will be active if one or more of the following internal signals are active; INT--RTCERROR, INT--IEC61850ERROR, INT--TIMESYNCHERROR
ADMnn	READY / FAIL	Analog input module n failed. Signal activation will reset the IED
BIMnn	READY / FAIL	BIM error. Binary input module Error status. Signal activation will reset the IED
BOMn	READY / FAIL	BOM error. Binary output module Error status.
IOMn	READY / FAIL	IOM-error. Input/Output Module Error status.
Table continues on next page		

HMI Signal Name:	Status	Description
MIMn	READY / FAIL	mA input module MIM1 failed. Signal activation will reset the IED
RTC	READY / FAIL	This signal will be active when there is a hardware error with the real time clock.
Time Sync	READY / FAIL	This signal will be active when the source of the time synchronization is lost, or when the time system has to make a time reset.
Application	READY / FAIL	This signal will be active if one or more of the application threads are not in the state that Runtime Engine expects. The states can be CREATED, INITIALIZED, RUNNING, etc.
RTE	READY / FAIL	This signal will be active if the Runtime Engine failed to do some actions with the application threads. The actions can be loading of settings or parameters for components, changing of setting groups, loading or unloading of application threads.
IEC61850	READY / FAIL	This signal will be active if the IEC61850 stack did not succeed in some actions like reading IEC61850 configuration, startup etc.
LMD	READY / FAIL	LON network interface, MIP/DPS, is in an unrecoverable error state.
LDCMxxx	READY / FAIL	Line Differential Communication Error status
OEM	READY / FAIL	Optical Ethernet Module error status.

Also the internal signals, such as INT--FAIL and INT--WARNING can be connected to binary output contacts for signalling to a control room.

In the IED Status - Information, the present information from the self-supervision function can be viewed. Indications of failure or warnings for each hardware module are provided, as well as information about the external time synchronization and the internal clock. All according to table 19. Loss of time synchronization can be considered as a warning only. The IED has full functionality without time synchronization.

15.2.2 Using front-connected PC

When an internal fault has occurred, extensive information about the fault can be retrieved from the list of internal events available in the SMS part:

TRM-STAT TermStatus - Internal Events

The list of internal events provides valuable information, which can be used during commissioning and fault tracing.

The internal events are time tagged with a resolution of 1ms and stored in a list. The list can store up to 40 events. The list is based on the FIFO principle, when it is full, the oldest event is overwritten. The list cannot be cleared and its content cannot be erased.

The internal events in this list not only refer to faults in the IED, but also to other activities, such as change of settings, clearing of disturbance reports, and loss of external time synchronization.

The information can only be retrieved from the Parameter Setting software package. The PC can be connected either to the port at the front or at the rear of the IED.

These events are logged as internal events.

Table 20: Events available for the internal event list in the IED

Event message:		Description	Generating signal:
INT--FAIL	Off	Internal fail status	INT--FAIL (reset event)
INT--FAIL			INT--FAIL (set event)
INT--WARNING	Off	Internal warning status	INT--WARNING (reset event)
INT--WARNING			INT--WARNING (set event)
IOn--Error	Off	In/Out module No. n status	IOn--Error (reset event)
IOn--Error			IOn--Error (set event)
ADMn-Error	Off	Analog/Digital module No. n status	ADMn-Error (reset event)
ADMn-Error			ADMn-Error (set event)
MIM1-Error	Off	mA-input module status	MIM1-Error (reset event)
MIM1-Error			MIM1-Error (set event)
INT--RTC	Off	Real Time Clock (RTC) status	INT--RTC (reset event)
INT--RTC			INT--RTC (set event)
INT--TSYNC	Off	External time synchronization status	INT--TSYNC (reset event)
INT--TSYNC			INT--TSYNC (set event)
INT--SETCHGD		Any settings in IED changed	
DRPC-CLEARED		All disturbances in Disturbance report cleared	

The events in the internal event list are time tagged with a resolution of 1ms.

This means that, when using the PC for fault tracing, it provides information on the:

- Module that should be changed.
- Sequence of faults, if more than one unit is faulty.
- Exact time when the fault occurred.

15.3 Repair instruction

Never disconnect the secondary connection of a current transformer circuit without short-circuiting the transformer's secondary winding. Operating a current transformer with the secondary winding open will cause a massive potential build up that may damage the transformer and may cause injuries to humans.

Never connect or disconnect a wire and/or a connector to or from a IED during normal service. Hazardous voltages and currents are present that may be lethal. Operation may be disrupted and IED and measuring circuitry may be damaged.

An alternative is to open the IED and send only the faulty circuit board to ABB for repair. When a printed circuit board is sent to ABB, it must always be placed in a metallic, ESD-proof, protection bag. The user can also purchase separate replacement modules.

Strictly follow the company and country safety regulations.

Most electronic components are sensitive to electrostatic discharge and latent damage may occur. Please observe usual procedures for handling electronics and also use an ESD wrist strap. A semi-conducting layer must be placed on the workbench and connected to ground.

Disassemble and reassemble the IED accordingly:

1. Switch off the dc supply.
2. Short-circuit the current transformers and disconnect all current and voltage connections from the IED.
3. Disconnect all signal wires by removing the female connectors.
4. Disconnect the optical fibers.
5. Unscrew the main back plate of the IED.
6. If the transformer module is to be changed:

- Remove the IED from the panel if necessary.
- Remove the rear plate of the IED.
- Remove the front plate.
- Remove the screws of the transformer input module, both front and rear.

7. Pull out the faulty module.
8. Check that the new module has a correct identity number.
9. Check that the springs on the card rail are connected to the corresponding metallic area on the circuit board when the new module is inserted.
10. Reassemble the IED.

If the IED has been calibrated with the system inputs, the calibration procedure must be performed again to maintain the total system accuracy.

15.4 Repair support

If an IED needs to be repaired, the whole IED must be removed and sent to an ABB Logistic Center. Please contact the local ABB representative to get more details.

15.5 Maintenance

The IED is self-supervised. No special maintenance is required.

Instructions from the power network company and other maintenance directives valid for maintenance of the power system must be followed.

Section 16 Glossary

AC	Alternating current
ACC	Actual channel
ACT	Application configuration tool within PCM600
A/D converter	Analog-to-digital converter
ADBS	Amplitude deadband supervision
ADM	Analog digital conversion module, with time synchronization
AI	Analog input
ANSI	American National Standards Institute
AR	Autoreclosing
ASCT	Auxiliary summation current transformer
ASD	Adaptive signal detection
ASDU	Application service data unit
AWG	American Wire Gauge standard
BBP	Busbar protection
BFOC/2,5	Bayonet fibre optic connector
BFP	Breaker failure protection
BI	Binary input
BIM	Binary input module
BOM	Binary output module
BOS	Binary outputs status
BR	External bistable relay
BS	British Standards
BSR	Binary signal transfer function, receiver blocks
BST	Binary signal transfer function, transmit blocks
C37.94	IEEE/ANSI protocol used when sending binary signals between IEDs
CAN	Controller Area Network. ISO standard (ISO 11898) for serial communication

CB	Circuit breaker
CBM	Combined backplane module
CCITT	Consultative Committee for International Telegraph and Telephony. A United Nations-sponsored standards body within the International Telecommunications Union.
CCM	CAN carrier module
CCVT	Capacitive Coupled Voltage Transformer
Class C	Protection Current Transformer class as per IEEE/ ANSI
CMPPS	Combined megapulses per second
CMT	Communication Management tool in PCM600
CO cycle	Close-open cycle
Codirectional	Way of transmitting G.703 over a balanced line. Involves two twisted pairs making it possible to transmit information in both directions
COM	Command
COMTRADE	Standard Common Format for Transient Data Exchange format for Disturbance recorder according to IEEE/ANSI C37.111, 1999 / IEC60255-24
Contra-directional	Way of transmitting G.703 over a balanced line. Involves four twisted pairs, two of which are used for transmitting data in both directions and two for transmitting clock signals
COT	Cause of transmission
CPU	Central processing unit
CR	Carrier receive
CRC	Cyclic redundancy check
CROB	Control relay output block
CS	Carrier send
CT	Current transformer
CU	Communication unit
CVT or CCVT	Capacitive voltage transformer
DAR	Delayed autoreclosing
DARPA	Defense Advanced Research Projects Agency (The US developer of the TCP/IP protocol etc.)
DBDL	Dead bus dead line

DBLL	Dead bus live line
DC	Direct current
DFC	Data flow control
DFT	Discrete Fourier transform
DHCP	Dynamic Host Configuration Protocol
DIP-switch	Small switch mounted on a printed circuit board
DI	Digital input
DLLB	Dead line live bus
DNP	Distributed Network Protocol as per IEEE Std 1815-2012
DR	Disturbance recorder
DRAM	Dynamic random access memory
DRH	Disturbance report handler
DSP	Digital signal processor
DTT	Direct transfer trip scheme
EHV network	Extra high voltage network
EIA	Electronic Industries Association
EMC	Electromagnetic compatibility
EMF	Electromotive force
EMI	Electromagnetic interference
EnFP	End fault protection
EPA	Enhanced performance architecture
ESD	Electrostatic discharge
F-SMA	Type of optical fibre connector
FAN	Fault number
FCB	Flow control bit; Frame count bit
FOX 20	Modular 20 channel telecommunication system for speech, data and protection signals
FOX 512/515	Access multiplexer
FOX 6Plus	Compact time-division multiplexer for the transmission of up to seven duplex channels of digital data over optical fibers
FUN	Function type

G.703	Electrical and functional description for digital lines used by local telephone companies. Can be transported over balanced and unbalanced lines
GCM	Communication interface module with carrier of GPS receiver module
GDE	Graphical display editor within PCM600
GI	General interrogation command
GIS	Gas-insulated switchgear
GOOSE	Generic object-oriented substation event
GPS	Global positioning system
GSAL	Generic security application
GTM	GPS Time Module
HDLC protocol	High-level data link control, protocol based on the HDLC standard
HFBR connector type	Plastic fiber connector
HMI	Human-machine interface
HSAR	High speed autoreclosing
HV	High-voltage
HVDC	High-voltage direct current
ICT	Installation and Commissioning Tool for injection based protection in REG670
IDBS	Integrating deadband supervision
IEC	International Electrical Committee
IEC 60044-6	IEC Standard, Instrument transformers – Part 6: Requirements for protective current transformers for transient performance
IEC 60870-5-103	Communication standard for protection equipment. A serial master/slave protocol for point-to-point communication
IEC 61850	Substation automation communication standard
IEC 61850–8–1	Communication protocol standard
IEEE	Institute of Electrical and Electronics Engineers
IEEE 802.12	A network technology standard that provides 100 Mbits/s on twisted-pair or optical fiber cable
IEEE P1386.1	PCI Mezzanine Card (PMC) standard for local bus modules. References the CMC (IEEE P1386, also known as Common Mezzanine Card) standard for the mechanics and the PCI

	specifications from the PCI SIG (Special Interest Group) for the electrical EMF (Electromotive force).
IEEE 1686	Standard for Substation Intelligent Electronic Devices (IEDs) Cyber Security Capabilities
IED	Intelligent electronic device
I-GIS	Intelligent gas-insulated switchgear
IOM	Binary input/output module
Instance	When several occurrences of the same function are available in the IED, they are referred to as instances of that function. One instance of a function is identical to another of the same kind but has a different number in the IED user interfaces. The word "instance" is sometimes defined as an item of information that is representative of a type. In the same way an instance of a function in the IED is representative of a type of function.
IP	1. Internet protocol. The network layer for the TCP/IP protocol suite widely used on Ethernet networks. IP is a connectionless, best-effort packet-switching protocol. It provides packet routing, fragmentation and reassembly through the data link layer. 2. Ingression protection, according to IEC 60529
IP 20	Ingression protection, according to IEC 60529, level IP20- Protected against solid foreign objects of 12.5mm diameter and greater.
IP 40	Ingression protection, according to IEC 60529, level IP40- Protected against solid foreign objects of 1mm diameter and greater.
IP 54	Ingression protection, according to IEC 60529, level IP54-Dust-protected, protected against splashing water.
IRF	Internal failure signal
IRIG-B:	InterRange Instrumentation Group Time code format B, standard 200
ITU	International Telecommunications Union
LAN	Local area network
LIB 520	High-voltage software module
LCD	Liquid crystal display
LDCM	Line differential communication module

LDD	Local detection device
LED	Light-emitting diode
LNT	LON network tool
LON	Local operating network
MCB	Miniature circuit breaker
MCM	Mezzanine carrier module
MIM	Milli-ampere module
MPM	Main processing module
MVAL	Value of measurement
MVB	Multifunction vehicle bus. Standardized serial bus originally developed for use in trains.
NCC	National Control Centre
NOF	Number of grid faults
NUM	Numerical module
OCO cycle	Open-close-open cycle
OCP	Overcurrent protection
OEM	Optical Ethernet module
OLTC	On-load tap changer
OTEV	Disturbance data recording initiated by other event than start/ pick-up
OV	Overvoltage
Overreach	A term used to describe how the relay behaves during a fault condition. For example, a distance relay is overreaching when the impedance presented to it is smaller than the apparent impedance to the fault applied to the balance point, that is, the set reach. The relay “sees” the fault but perhaps it should not have seen it.
PCI	Peripheral component interconnect, a local data bus
PCM	Pulse code modulation
PCM600	Protection and control IED manager
PC-MIP	Mezzanine card standard
PMC	PCI Mezzanine card
POR	Permissive overreach
POTT	Permissive overreach transfer trip

Process bus	Bus or LAN used at the process level, that is, in near proximity to the measured and/or controlled components
PSM	Power supply module
PST	Parameter setting tool within PCM600
PT ratio	Potential transformer or voltage transformer ratio
PUTT	Permissive underreach transfer trip
RASC	Synchrocheck relay, COMBIFLEX
RCA	Relay characteristic angle
RISC	Reduced instruction set computer
RMS value	Root mean square value
RS422	A balanced serial interface for the transmission of digital data in point-to-point connections
RS485	Serial link according to EIA standard RS485
RTC	Real-time clock
RTU	Remote terminal unit
SA	Substation Automation
SBO	Select-before-operate
SC	Switch or push button to close
SCL	Short circuit location
SCS	Station control system
SCADA	Supervision, control and data acquisition
SCT	System configuration tool according to standard IEC 61850
SDU	Service data unit
SLM	Serial communication module.
SMA connector	Subminiature version A, A threaded connector with constant impedance.
SMT	Signal matrix tool within PCM600
SMS	Station monitoring system
SNTP	Simple network time protocol – is used to synchronize computer clocks on local area networks. This reduces the requirement to have accurate hardware clocks in every embedded system in a network. Each embedded node can instead synchronize with a remote clock, providing the required accuracy.

SOF	Status of fault
SPA	Strömberg Protection Acquisition (SPA), a serial master/slave protocol for point-to-point communication
SRY	Switch for CB ready condition
ST	Switch or push button to trip
Starpoint	Neutral/Wye point of transformer or generator
SVC	Static VAr compensation
TC	Trip coil
TCS	Trip circuit supervision
TCP	Transmission control protocol. The most common transport layer protocol used on Ethernet and the Internet.
TCP/IP	Transmission control protocol over Internet Protocol. The de facto standard Ethernet protocols incorporated into 4.2BSD Unix. TCP/IP was developed by DARPA for Internet working and encompasses both network layer and transport layer protocols. While TCP and IP specify two protocols at specific protocol layers, TCP/IP is often used to refer to the entire US Department of Defense protocol suite based upon these, including Telnet, FTP, UDP and RDP.
TEF	Time delayed gound-fault protection function
TM	Transmit (disturbance data)
TNC connector	Threaded Neill-Concelman, a threaded constant impedance version of a BNC connector
TP	Trip (recorded fault)
TPZ, TPY, TPX, TPS	Current transformer class according to IEC
TRM	Transformer Module. This module transforms currents and voltages taken from the process into levels suitable for further signal processing.
TYP	Type identification
UMT	User management tool
Underreach	A term used to describe how the relay behaves during a fault condition. For example, a distance relay is underreaching when the impedance presented to it is greater than the apparent impedance to the fault applied to the balance point, that is, the set reach. The relay does not “see” the fault but perhaps it should have seen it. See also Overreach.

UTC	Coordinated Universal Time. A coordinated time scale, maintained by the Bureau International des Poids et Mesures (BIPM), which forms the basis of a coordinated dissemination of standard frequencies and time signals. UTC is derived from International Atomic Time (TAI) by the addition of a whole number of "leap seconds" to synchronize it with Universal Time 1 (UT1), thus allowing for the eccentricity of the Earth's orbit, the rotational axis tilt (23.5 degrees), but still showing the Earth's irregular rotation, on which UT1 is based. The Coordinated Universal Time is expressed using a 24-hour clock, and uses the Gregorian calendar. It is used for aeroplane and ship navigation, where it is also sometimes known by the military name, "Zulu time." "Zulu" in the phonetic alphabet stands for "Z", which stands for longitude zero.
UV	Undervoltage
WEI	Weak end infeed logic
VT	Voltage transformer
X.21	A digital signalling interface primarily used for telecom equipment
$3I_O$	Three times zero-sequence current.Often referred to as the residual or the ground-fault current
$3V_O$	Three times the zero sequence voltage. Often referred to as the residual voltage or the neutral point voltage

Contact us

ABB AB
Substation Automation Products
SE-721 59 Västerås, Sweden
Phone +46 (0) 21 32 50 00
Fax +46 (0) 21 14 69 18

www.abb.com/substationautomation

Power and productivity
for a better world™