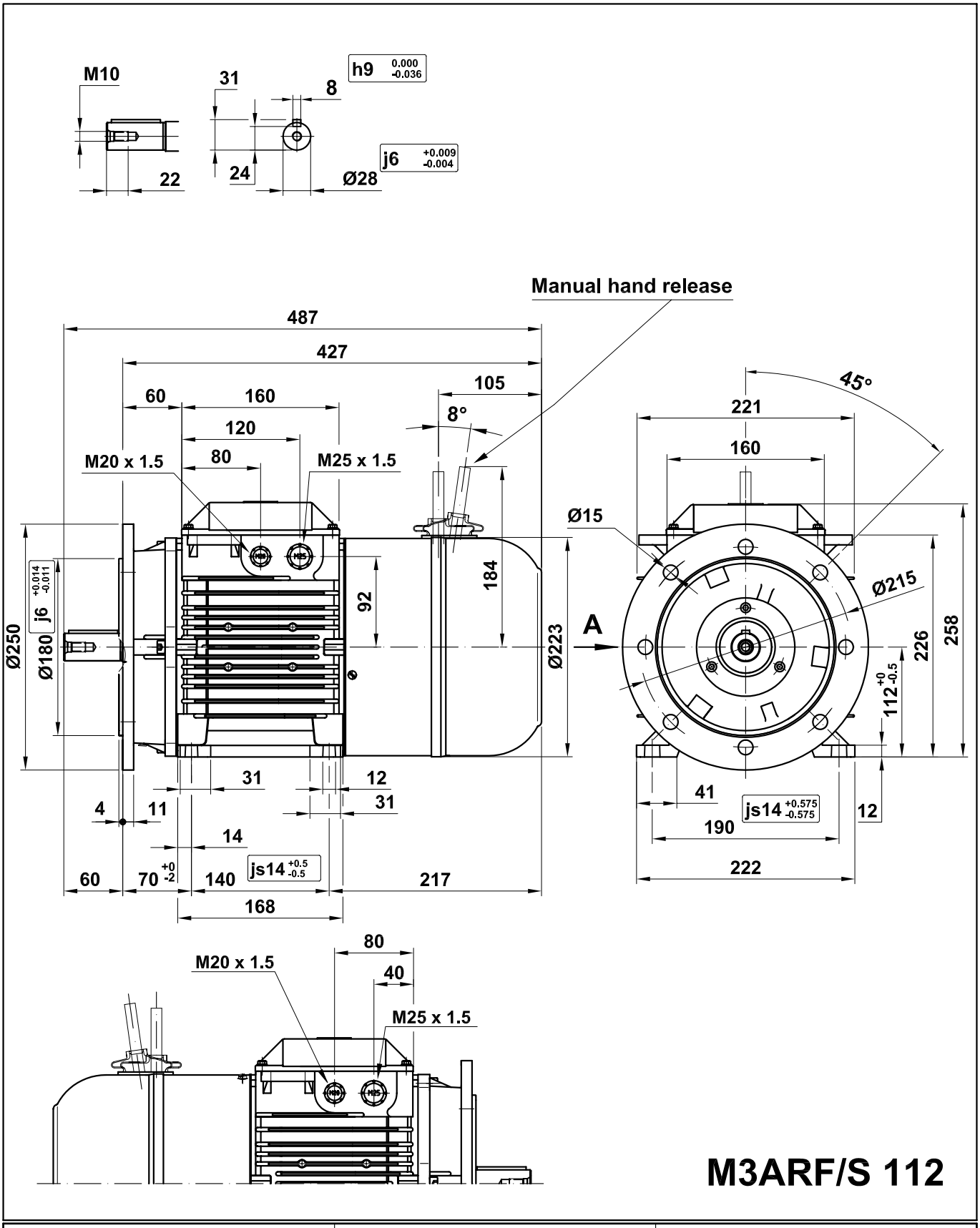

Motor Dimension Print	Motor Type : M3ARF/S 112	Document Nº : AE 4431 5138-301R

Description :
Brake motor foot & flange mounted / Motor freno con patas y brida IM 2001

Unit : División Motores, Spain.	Issued by : IK / SÁENZ	Replaces :
Date : 2005-09-15	Approved by : IK / G.BLANES	Replaced by :

ABB Automation Products, S.A.

Customer Reference :