Article

Designing next generation's protection systems

Multi-object capability is the next step in the development that changes the way of designing protection and control systems for transmission applications. Already now there are protection and control IEDs - such as the 670 series from ABB - that are powerful enough to handle several objects with a single IED and to enable other smart solutions based on functional integration. This article provides examples on how this capability can be and has been utilized to increase availability and to optimize cost-performance ratio while maintaining high grid reliability.

More and more of the electronic devices in the world have become multi-functional. Look at mobile phones, for instance. It can be said that today most mobile phones integrate also a digital camera, radio, MP3 player, alarm clock, calendar etc., in addition to the functionality needed for making phone calls. In fact, the number of people who would not even buy a mobile phone that can only be used for making phone calls and

For more information please contact:

ABB AB, Substation Automation Products:
Contact Person: Maarit Nyström
Tel: +46 21 321 411
Fax: +46 21 32 42 23
maarit.nystrom@se.abb.com

sending text messages has increased rapidly and continues to do so. Protection and control and telecom are, of course, completely different field of operations, but we can see that similar integration of more and more functionality in a single device is happening with the latest protection and control IEDs (Intelligent Electronic Device) for transmission applications.

The introduction of numerical technology at the beginning of the 1980s enabled integration of a large number of protection functions in a single device. For example, a line distance protection device could also provide autoreclosing, synchrocheck, disturbance recorder, breaker failure and so on. Or, a bay control device was able to handle back-up protection functions. In 2008 it is time to take the next step in integration: integration of protection and control of several power system objects in a single IED, so called multi-object capability.

New application opportunities

Already now there are IEDs - such as the 670 series from ABB - that are powerful enough to handle such combinations. This opens up for whole new application opportunities. At the same time, multi-object capability increases the availability – less hardware used in the protection system means lower risk of failure (longer Mean Time To Failure). Less components in the system also means less spare parts and less maintenance – both factors that significantly contribute to increased cost-efficiency of protection and control systems.

From the grid reliability point of view, designing the next generation's protection systems utilizing multi-object capability do not require any compromises either in security or dependability. This capability also provides new interesting ways of designing fully redundant protection and control systems. And as already mentioned

above, the availability will increase and cost savings can be achieved during the life cycle of the protection system.

Powerful examples

The best way to show the power of multi-object capability is to look at some examples. For instance, let's consider a transmission line with a transformer on the line (see figure 1).

By integrating a transformer differential protection and a line differential protection in a single IED, the availability will increase, while possibility to distinguish between faults in the transformer and on the line is maintained, meaning that selectivity has not been compromised. By utilizing the multi-object capability of the 670 series IEDs, the number of IEDs used for protecting these two objects can be decreased from four to two.

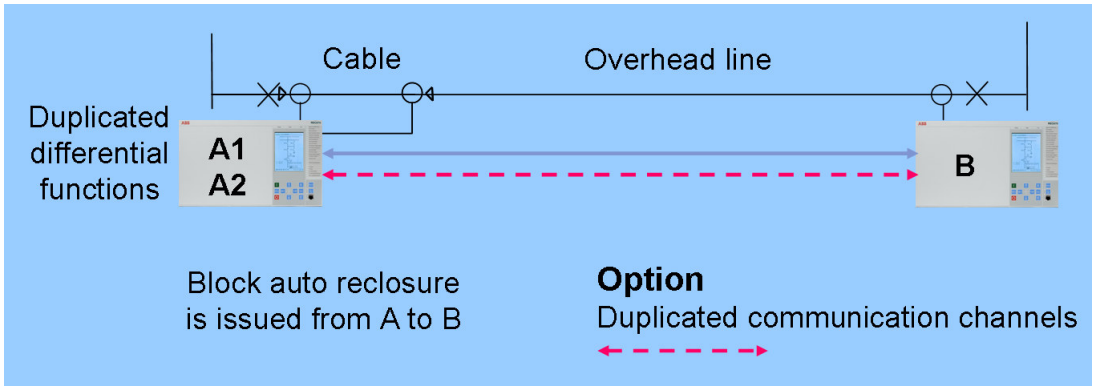

Figure 1: By integrating a transformer differential protection and a line differential protection in a single 670 series IED, the number of IEDs needed for protecting these two objects can be decreased from four to two while increasing the availability and maintaining full selectivity.

The multi-object capability can also be utilized in protection of generating stations. In

a single powerful generator protection IED, such as REG 670, it is possible to integrate differential protection for both the generator and the step-up transformer as well as for the auxiliary supply transformer (see figure 2), together with all other functionality normally required. In this case, multi-object capability provides a new way to optimize cost-performance ratio of the protection system in relation to the importance of the generating station. This can be done by accommodating the needed functionality in an appropriate number of IEDs to ensure both dependability and security of the system.

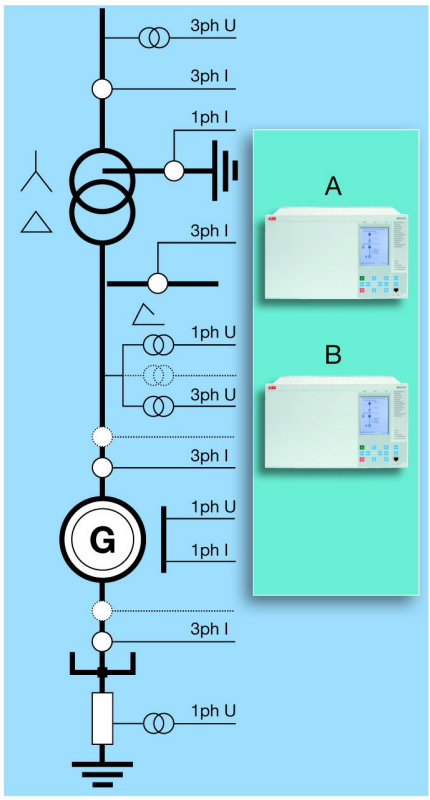

Figure 2: A single powerful generator protection IED REG 670 can integrate differential protection for both the generator and the step-up transformer as well as for the auxiliary supply transformer, together with all other functionality normally required.

Further, the protection and control IEDs based on powerful hardware and software platforms also enable the integration of complete control functionality in a single protection IED. The example in figure 3 shows that by integrating control functionality in both main 1 and main 2 protection IEDs, redundancy in both protection and control can be achieved in a cost-efficient way.

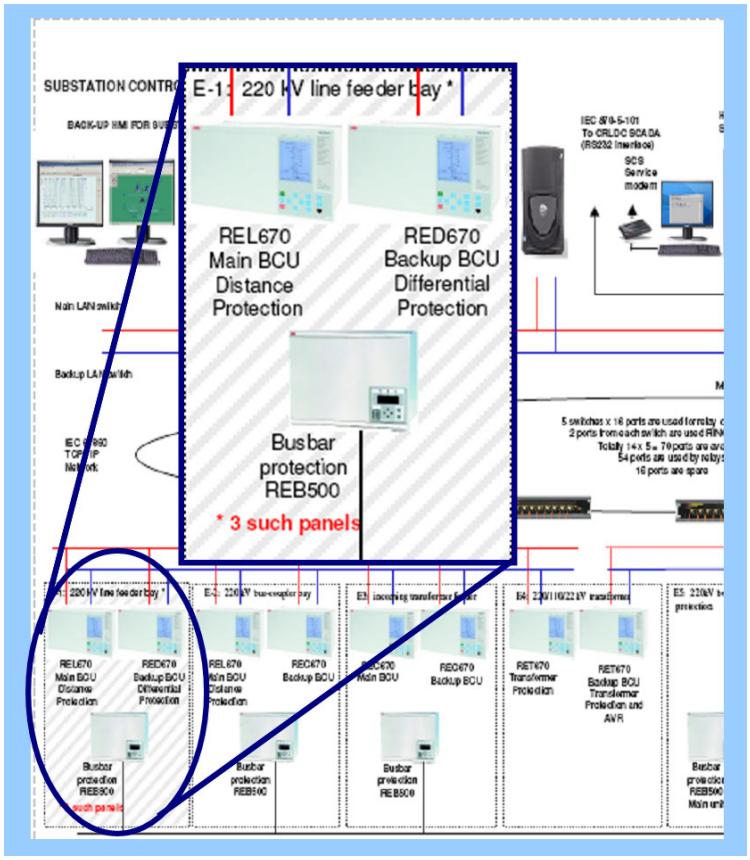

Figure 3: The integration of control functionality in both main 1 and main 2 protection IEDs, enables redundancy in both protection and control to be achieved in a cost-efficient way.

Supported by IEC 61850

One important enabler for multi-object capability in addition to powerful hardware and software platforms is the IEC 61850 standard for substation automation. By defining functions as logical nodes with clearly defined output data, the standard

provides more freedom and flexibility for allocating the functions needed in protecting the power system objects.

Conclusions

It can be said that multi-object capability is the next step in the development that changes the way of designing protection and control systems for transmission applications. As the technology evolves and even more powerful hardware platforms than those being available today will become available, the development will continue towards totally integrated protection and control systems that facilitate new substation automation solutions with interesting future benefits.

Already today, as we can see from several examples from different countries, the multi-object capability can be utilized in numerous ways to design protection and control systems that meet the fundamental requirements of power utilities in every respect. We are coming to a point where only engineers' imagination of applying the concept is a limit – and so far that has never been a major obstacle in development and utilization of new technologies, or?

Authors: Åke Lindevall, Senior Regional Marketing Manager and Maarit Nyström, Product Promotion Manager, ABB AB, Substation Automation Products