Doc. N.° 1SDH001400R0913 - L8926

SACE Emax 2

Manovella inserzione/estrazione - E2.2-E4.2-E6.2
Racking in and out crank - E2.2-E4.2-E6.2
Ausfahrhebel - E2.2-E4.2-E6.2
Manivelle de débrochage - E2.2-E4.2-E6.2
Manivela de extracción - E2.2-E4.2-E6.2

E2.2-E4.2-E6.2

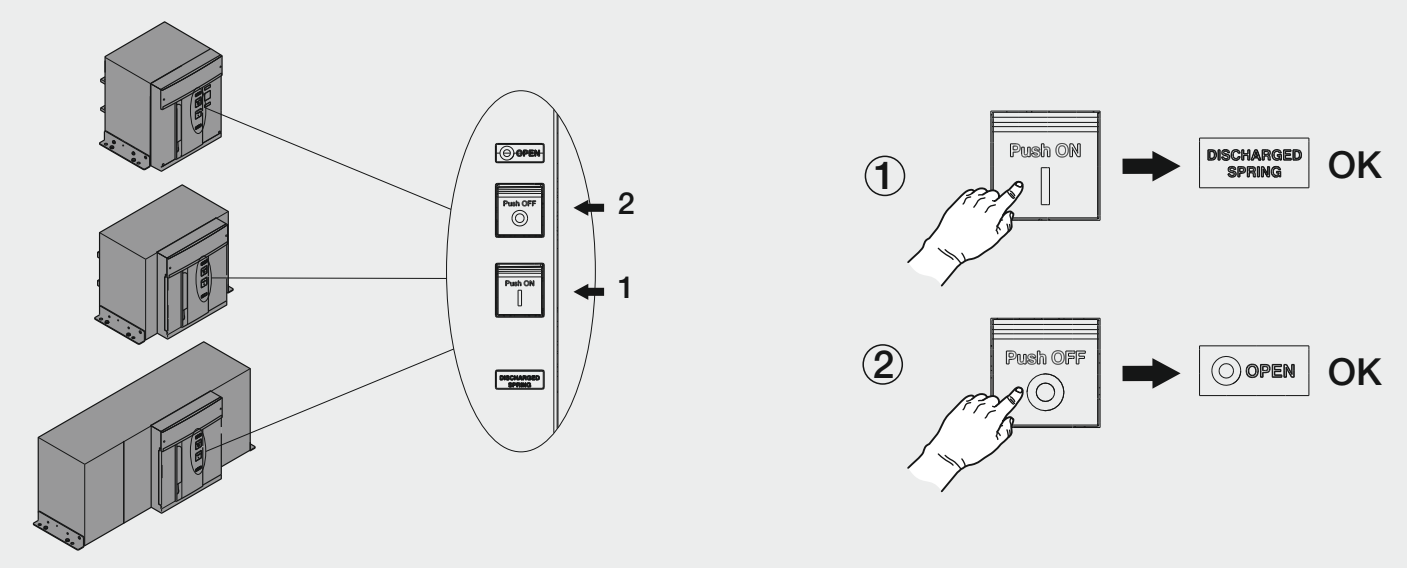

LEGGERE ATTENTAMENTE IL DOCUMENTO **RH0100003** PRIMA DI PROCEDERE
READ CAREFULLY THE DOCUMENT **RH0100003** BEFORE PROCEEDING

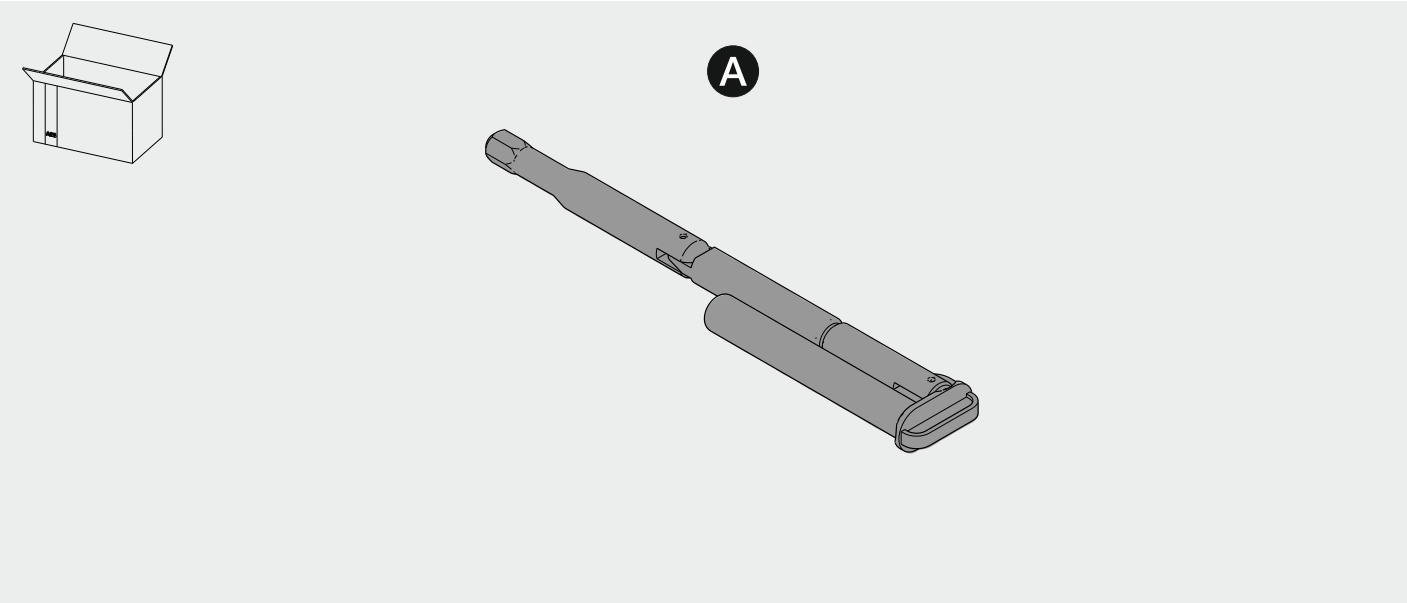

Power and productivity
for a better world™

1

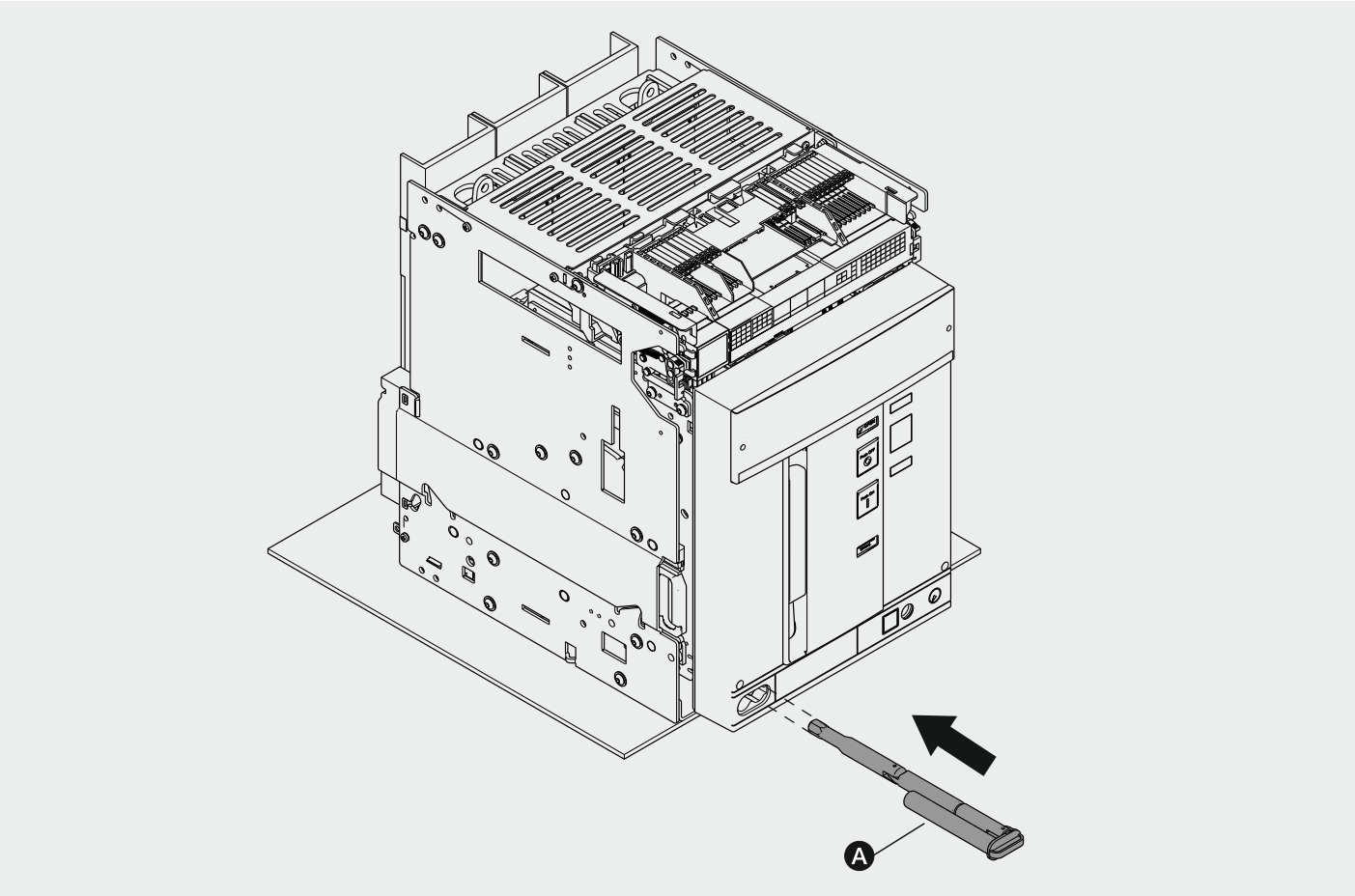

2

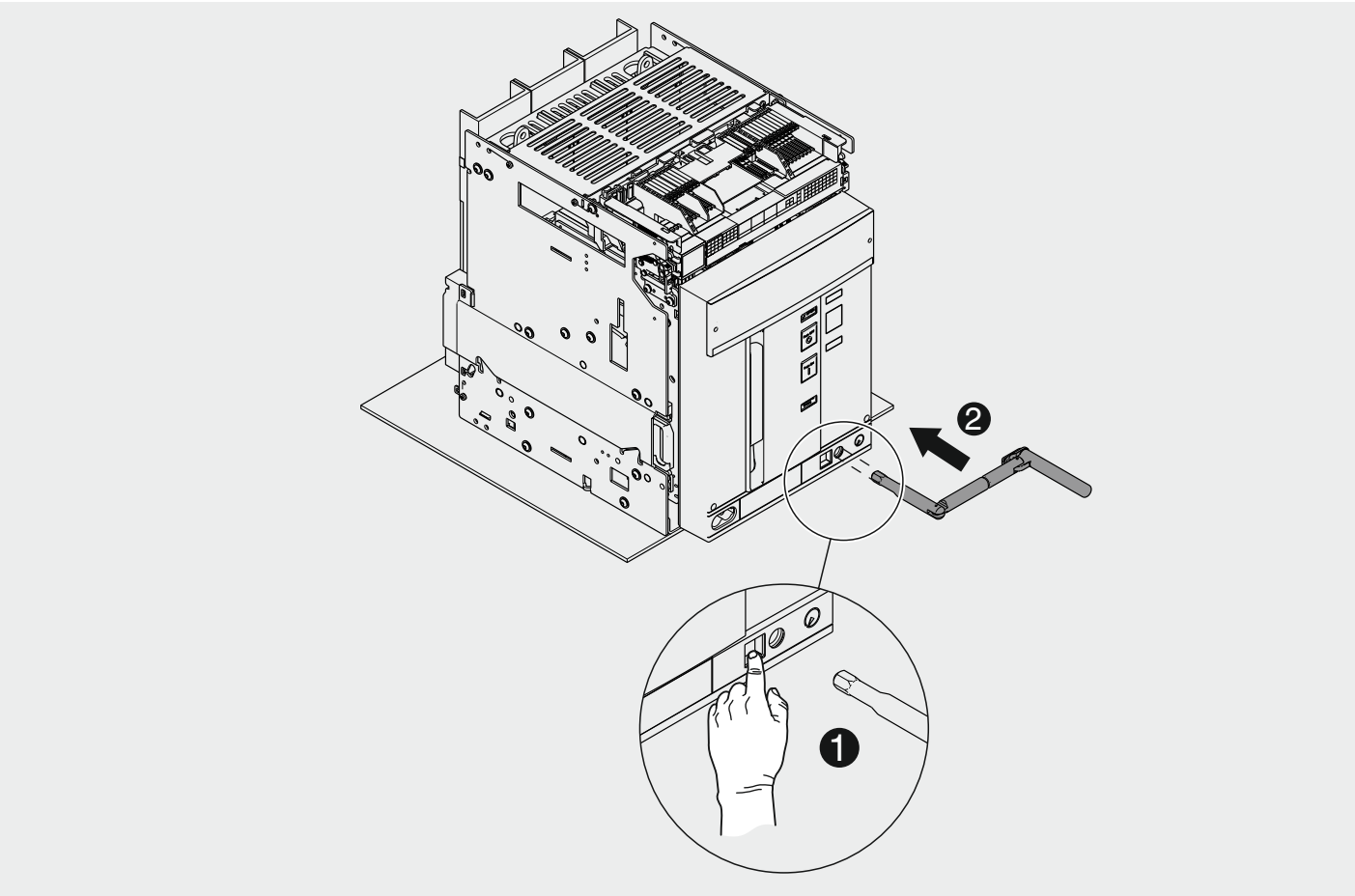

For more information please contact:

ABB S.p.A.
ABB SACE Division
Via Baioni, 35
24123 Bergamo - Italy
Phone: +39 035 395 111
Fax: +39 035 395 306 - 433

© Copyright 2013 ABB. All rights reserved.
www.abb.com

Power and productivity
for a better world™