Station Automation & Protection

User's Manual

HV/Voltage Control*2.1

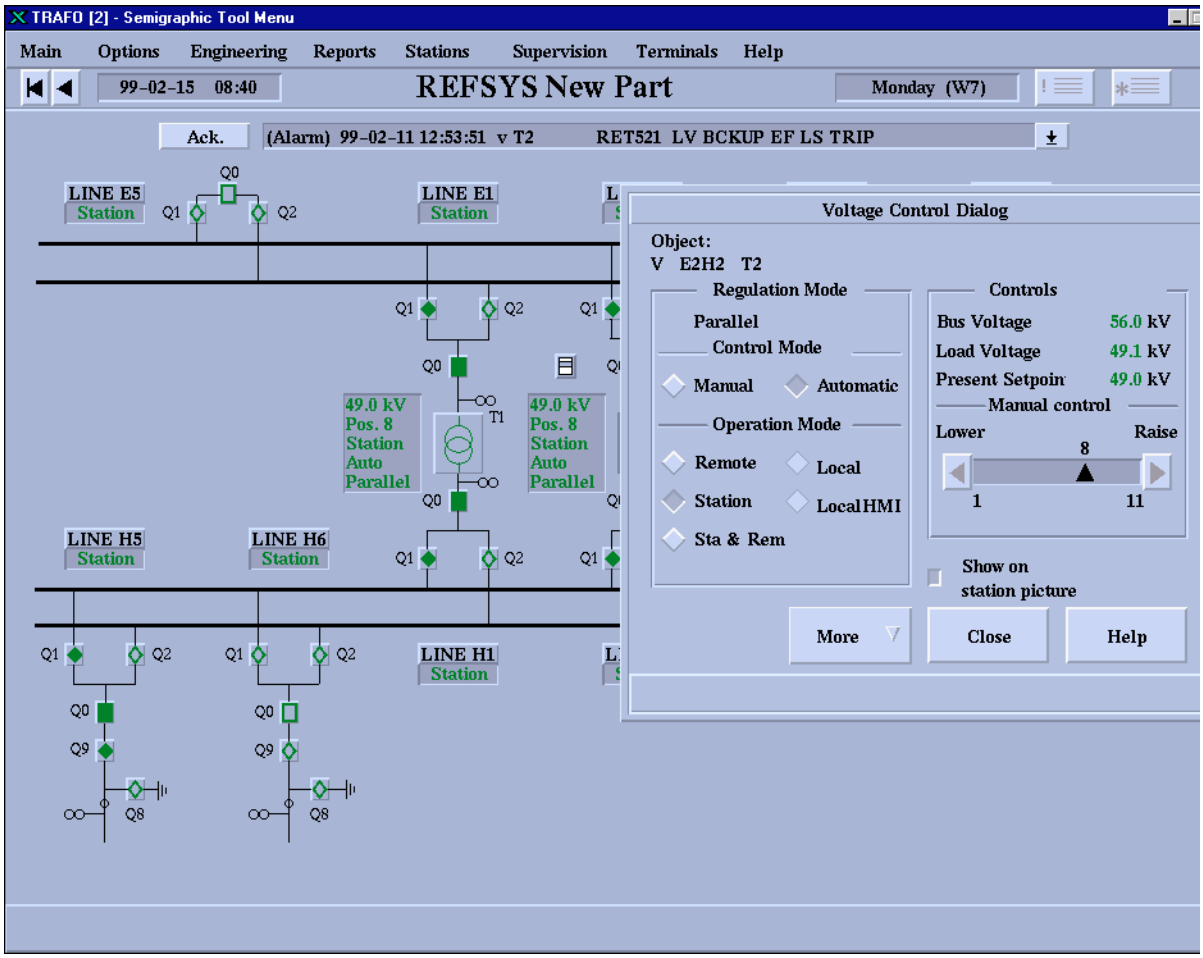

This manual belongs to:

_____

Contents

This is a User's guide for HV/Voltage Control

Document number: 1MRK 511 061-UEN

Version: 2.1

Revision: 00

Issue date: February 1999

Data subject to change without notice

This document has been carefully checked. If the user nevertheless detects any errors, he is asked to notify us as soon as possible.

The data contained in this manual is intended solely for the product description and is not to be deemed to be a statement of guaranteed properties. In the interests of our customers, we constantly seek to ensure that our products are developed to the latest technological standards.

As a result, it is possible that there may be some differences between the HW/SW product and this information product.

Author´s address:

ABB Automation Products AB
Substation Automation Division
S-721 59 Västerås
Tel: +46 21 34 20 00
Fax: +46 21 14 69 18
Internet: http://www.abb.se/apr

The chapter "Introduction"

1 Introduction

1.1 Preface

Welcome to the HV/Voltage Control User's Guide. This document will provide you with the necessary information for installing, configuring and modifying the different parts in the HV/Voltage Control package.

To be able to understand this document the user should be familiar with MicroSCADA and MicroLIBRARY.

The functions described here are designed and created by ABB Automation Products AB in Västerås, Sweden.

1.2 References

The following documents are related to this manual and the operation of the HV/Voltage Control functions.

1. S.P.I.D.E.R MicroSCADA User's Manual * 8.4.1
2. S.P.I.D.E.R MicroSCADA Programming Language SCIL * 8.4.1
3. S.P.I.D.E.R MicroSCADA Object Description * 8.4.1
4. User's Guide HV/RET 521, 1MRK 511 062-UEN * 2.1

1.3 Abbreviations and definitions

Base picture	Background picture, including menu bar. The base on which standard functions are installed.
BBONE	Back Bone
HV	High voltage
HV/Voltage Control	The program package for the high voltage control functions part of LIB520.
HW	Hardware
LAN	Local Area Network
LIB500	Application Library 500, the common platform for ABB application engineering within MicroSCADA
LIB520	High Voltage MicroLIBRARY
LON	Local Operating Network
MicroLIBRARY	Application Library, previous version to LIB 500
MV	Medium voltage
Process symbol	Graphical presentation of a standard function in run-time.
SCT	Standard Configuration Tool

SIT	Standard Installation Tool
SLIB	Help tool for development of dialogue pictures.
SCS	Substation Control System. A system for monitoring and controlling a complete substation. In this document the system is MicroSCADA.
SW	Software
TCP/IP	Transmission Control Protocol/Internet Protocol.

1.4 Font conventions

Normal text is written with this font and size.

```
SCIL CODE, SCIL PROGRAMS AND FILE NAMES ARE WRITTEN WITH THIS
FONT AND SIZE.
```

The chapter "Instructions"

1 System requirements

In order to operate, the software module HV/Voltage Control poses the following requirements on its environment.

1.1 Terminal end

Remote SPA-bus communication or LON-bus communication. The following terminal is supported:

- RET 521*2.1

1.2 The MicroSCADA PC

- 64MB RAM
- 1 GB disk
- Operating system Windows/NT 4.0
- MicroSYS revision 8.4.1C or later
- MicroTOOL revision 8.4.1C or later
- MicroNET revision 8.2C or later
- PCNet revision 8.4.1C or later
- LIB500 revision 4.0.1B or later
- LIB 520 revision 4.0.1C-1 or later

1.2.1 The HV/Voltage Control package

- 1.2 MB disk space

2 Installation

Before using HV/Voltage Control the software has to be installed on the hard disk of the MicroSCADA computer. (HV/Control must be installed before HV/Voltage Control)

Installation has two meanings.

1 Installing the software:

- Installation of the HV/Voltage Control software module means copy of the files from the diskette to the hard disk.

2 Installing the library functions:

- Installation of a HV/Voltage Control library function means installation of the library function in to a picture by means of Standard Installation Tool and creation of necessary database.

Note!

In order to avoid problems, it is recommended not to have the MicroSCADA active during the installation.

2.1 Installation of MicroSCADA software

Before the installation of the HV/Voltage Control package can take place, the user must make sure that the MicroSCADA software is already installed on the PC.

2.2 Installation of the HV/Voltage Control software package

To install from the disk-drive to the hard disk, please follow the steps below:

- Start up the Explorer
- Run `A:\L520_402_a2.exe`
- Follow the instructions on the screen
- The HV/Voltage Control package is now properly installed on the hard disk of the PC.
- After installation - read and follow any package specific instruction in the Readme file. See “Readme file” on page 13.
- Start the MicroSCADA

The software is now installed in the following directories:

```
[drive]:\SC\LIB4\SMOD\HVPROCESS\INST
[drive]:\SC\LIB4\SMOD\HVPROCESS\LANG0
[drive]:\SC\LIB4\SMOD\HVPROCESS\USE
```

The following files are also added by the installation:

```
[drive]:\SC\LIB4\BASE\BBONE\USE\PATH4_S1.TXT
[drive]:\SC\LIB4\BASE\BBONE\INST\INDEX4_S3.TXT
```

these two files are used by the system to update the LIB 500 files:

```
[drive]:\SC\LIB4\BASE\BBONE\USE\PATH4.TXT
[drive]:\SC\LIB4\BASE\BBONE\INST\MLIB_INDEX.TXT
```

See also “Updated files” on page 70 regarding the additions to the files above.

Note:
The difference of library separators in WIN NT “\” and MicroSCADA “/”.

After the installation, you should have a structure according “Location of the HVLib functions” on page 14.

2.3 Readme file

It is important to read and follow the instructions in the README1.TXT file, which is installed to the directory

```
[drive]:\SC\LIB4\SMOD\HVPROCESS
```

Any specific release information, known errors and limitations are stated in this file. It is therefore very important that you ALWAYS read the README1.TXT file.

2.4 Location of the HVLib functions

HVLib functions are stored on to hard disk in the following way:

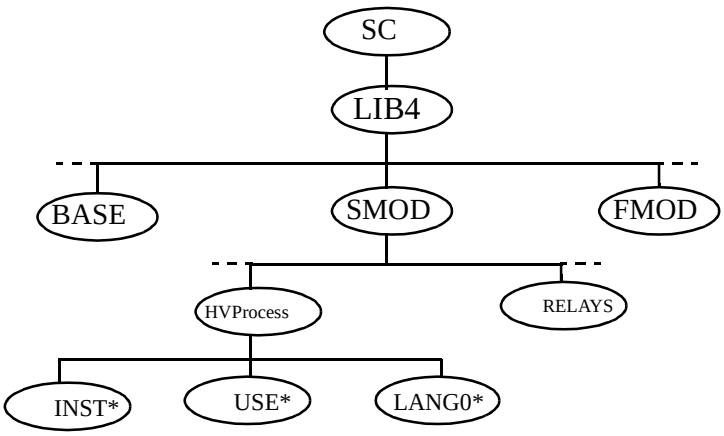

Fig. 2.1 HVLib directory structure.

* These directories are mostly used with their logical path names `S_INST, S_USE` and `S_LANG` defined in file `PATH4_S1.TXT`

3 Creating and preparing an application

Note: Before reading any further, please read at least the overview and tutorials starting on page 29.

The following steps are essential when creating a new application and preparing it for use with HV/Voltage Control functions.

- Consider and define the *Authorization grouping*. The *Authorization levels* can be defined later. The setup is taken in account during standard function confguration. The *Authorization grouping* is defined in the User Management tool.
- Setup the *APL:BSV15* in SYS_BASCON.COM for OI attribute in Process database. See “Object identifier” on page 15.
- The installed function demands that *process objects* are created to work properly in run-tine mode. This will avoid error codes appear.

3.1 Station type

The default value when configuring the objects is LON (station type REX). The SPA type can optionally be selected. If LON is selected, the process objects are created without bit numbers.

3.2 Object identifier

Before installation the use of the attribute OI (Object Identifier) must be decided.

Open `SYS_BASCON.COM` via MicroSCADA Control Panel/Admin/Config. In the system configuration file `SYS_BASCON.COM` locate the following section:

```
;*****************************************************
;
;         APPLICATIONS
;The usage of OI & OX -attributes (required by LIB 500)
@SV(15) = LIST(-
             Process_Objects=LIST(-
                OI=LIST(-
                   Title1=VECTOR("Substation"),-
                   Title2=VECTOR("Bay"),-
                   Title3=VECTOR("Device"),-
                   Title4=VECTOR(""),-
                   Title5=VECTOR(""),-
                   Length1=10,-
                   Length2=15,-
                   Length3=5,-
                   Length4=0,-
                   Length5=0,-
...
```

The parameters `Length1`, `Length2` and `Length3` must now be set as follows:

The `Length1` is the definition of the *Substation name* (minimum length is 2), `Length2` is the definition of *Bay name* (minimum length is 2) and `Length3` is the definition of the *Device (Object) name*. The sum of these 3 values must be 30. For `Length1` and `Length2` one character is used for space (between *Station name*/*Bay name* and *Bay name*/*Device name*). `Length4` and `Length5` are optional, but total length of OI attribute must not exceed 30.

It is of **greatest importance** that this is made before configuration of the installed functions because the configuration process takes these values in account when creating the process database. If variable `@OI_LENGTH` is not defined in the configuration file, then override value defined in standard function configuration file is valid, which means `LENGTH1=2`, `LENGTH2=14` and `LENGTH3=14`. This may cause unexpected behaviour in run-time, especially in the case where medium volatage and high voltage functions are installed in the same station picture.

For the event list, it can be configured if ‘Station_name’, ‘Bay_name’ and ‘Device_name’ shall be shown (in the ‘Object-ID’ column of the event list). This is configured using the “Settings” tool (available under the ‘Options’ menu). Select ‘Tools’ and ‘Show Object ID’. In the appearing dialogue it is possible to configure if the ‘Station_name’, ‘Bay_name’ and ‘Device_name’ shall be shown in the event list.

3.3 Installing and configuring

The installation of standard functions is divided into two main parts: installation and configuration.

During the installation, name of the picture function (5 to 10 characters) is required from the user, as well as the position of the picture function in the base picture. Choice of the name and the position is free.

During the configuration, change of the default settings may be done. Process objects are created via the Process Object Tool. An advantage with this procedure is that several picture functions can be installed at once, without leaving the installation tool, and bring up the SCT afterwards for adjustment of configurable parameters and creation of the process objects.

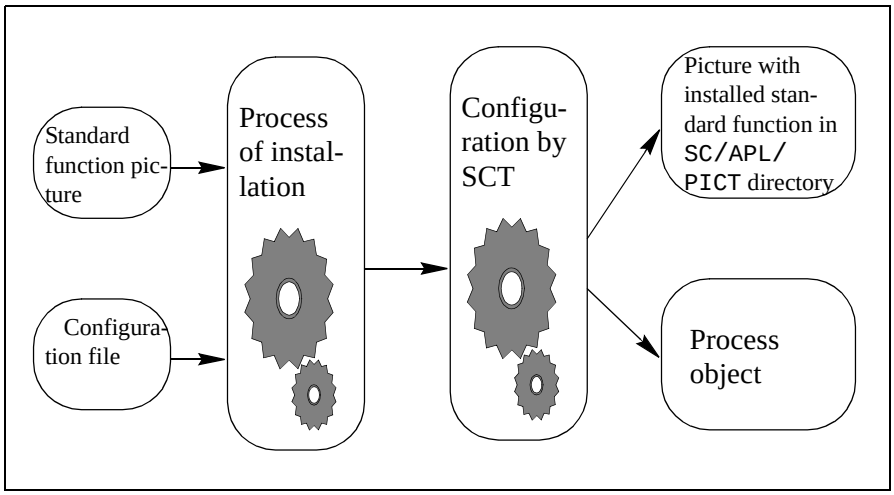

Fig. 2.2 Process of the installation and configuration.

LIB520 standard function pictures are stored in directory `SC\LIB4\SMOD\HVPROCESS\INST`. The following guidelines assumes that you have the base function properly installed in the picture.

3.3.1 Installation tool

For installation of LIB520 standard function in the base picture, the Standard Installation Tool is used. By means of this tool it is possible to choose what kind of function to install and assign an ID, i.e. a unique name for the picture function before it is installed in the picture.

To install a new function, select a picture and open the picture editor. In the picture editor standard tool select Picture Functions/ MicroLIB | LIB4. The installation tool will appear. In the directory structure, select LIB4 and LIB520 and after that HV Process/Voltage Ctrl to bring up the HV/Voltage Control function. Mark the desired function, give an ID and press Install. Position the function anywhere within the base picture.

To install HV/Voltage Control measurement function select Measurement under Voltage Ctrl, give an ID and press Install. Position the function close to HV/Voltage Control function.

3.3.2 Standard Configuration Tool

After installing the standard function in the picture, it is necessary to configure the function. For this purpose, the SCT is used. The user can adjust the configurable parameters and create the process objects.

SCT is accessable via standard picture editor by selecting of Picture Functions | Conf.Tool. More information about installing and configuration of each function is given later in the document.

3.3.3 Process Object Tool

From the SCT, the process object tool can be accessed by pushing of the button “Tools”. This tool is used for creating all necessary process objects in the data base. The process object tool is only accessible when the installed function needs a process database.

This tools gives automatically suggestion for logical name and value of OI attribute.

3.3.4 Representation Tool

The representation tool is also accessible from the SCT, by pushing of the button “Tools”. This tool is used whenever a representation need to be selected or modified, which means that the tool is not visible for all functions, but just for those ones that have possibility of changing of presentation symbol.

3.3.5 Colour Tool

The colour tool is also accessible from the SCT, by pushing of the button “Tools”. This tool is used if a different colour scheme, than that presented in “General principles” on page 29 is desired.

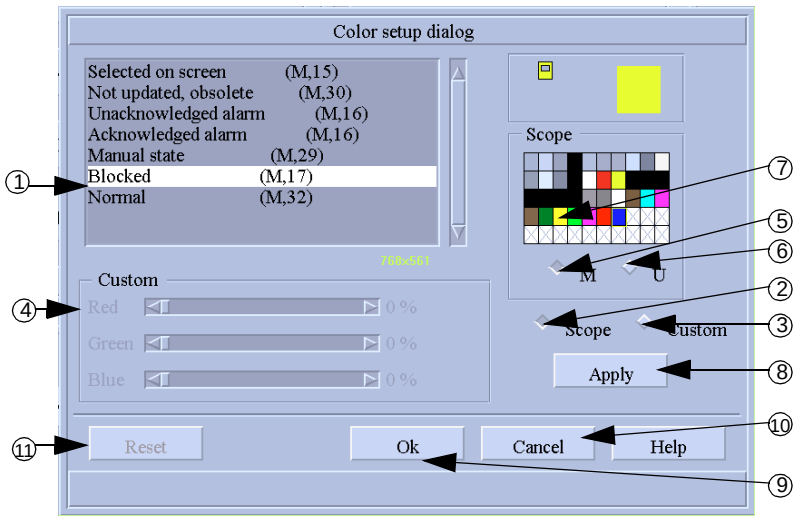

Fig. 2.3 The colour tool

To change a colour: First select the status, which you want to give a new colour (1). Then you select Scope (2), for using a standard colour, or Custom (3) to mix your own colour using the RGB-mixer (4). If Scope (2) is chosen you shall select either M=System colours (5) or U=User colours (6) and then click on the desired colour (7). These colours are defined in the MicroSCADA standard colour setting picture. Finally click Apply (8) to effectuate the change or Ok (9) to effectuate and close the dialoge. The dialogue can, at any time, be cancelled (10) or the colours reset to original (11).

3.3.6 The HV/Voltage Control function

In the installation tool, choose LIB4/LIB520/HVPROCESS/Voltage Ctrl/Large(3*3). With LARGE(3*3) highlighted, enter an ID for the function and press install. Place the picture function somewhere in the picture.

Bring up the SCT to alter the configurables.

Configurable	**Choices**
STATION_NAME	Text string defining the station name. Max length is defined in the APL:BSV15 variable, see “Creating and preparing an application” on page -14. Default is “”.
BAY_NAME	Text string defining the bay name. Max length is defined in the APL:BSV15 variable, see “Creating and preparing an application” on page -14. Default is “”.

DEVICE_NAME
Text string defining the device name.Max length is defined in the APL:BSV15 variable, see “Creating and preparing an application” on page -14. Default is “”.

SPECIAL_IDENTIFIER_1
Additional identifier for object and signal grouping. Max length is defined in the APL:BSV15 variable.
Note: Is only visible in SCT if definition is made in the SYS_BASCON.COM

SPECIAL_IDENTIFIER_2
Additional identifier for object and signal grouping. Max length is defined in the APL:BSV15 variable.
Note: Is only visible in SCT if definition is made in the SYS_BASCON.COM

NOMINAL_VOLTAGE
Is the nominal voltage in kV. Default value is 20kV.

MIN_POSITION
Is the min position of the nominal voltage.
Default is 0.

MAX_POSITION
Is the max position of the nominal voltage.
Default is 19.

P_OBJECT_LN
The logical name of the data base process objects. Default is “DUMMY”.

TRANSFORMER_TYPE
The number of winding in the transformer. Default is “2-winding”.

VCTR_TYPE
Type of Voltage Control element used in terminal, SINGLE or PARALLEL. Default value is “SINGLE”.
The PARALLEL element can also work for SINGLE mode, but SINGLE element can only work in SINGLE mode.

PRIMARY_POSITION
The direction of the transformers primary winding. Default is “Up”.

STATION TYPE
Communication unit software, SPANET or LON. Default value is “LON”.

DIALOG_WINDOW_NAME

Defines what shall be presented as object identifier in the main dialogue. Default value is “MNOPER”.

AUTHORIZATION GROUP

Is the authorization group to which the HV/Voltage Control is connected. Default is “General”.

TOPO_OBJECT_COLOR_HIGH_LN

The LN attribute of first connecting line picture function (line segment) process object. This attribute can be omitted if busbar coloring is not used. Default is “T”.

EVENT_BLOCK

Is the corresponding event block in the terminal were the signals are connected to. Possible selections are:
* Not defined
* EV10 for Binary Input (for this alt. also EV11 and EV12 is ussed)
Default value is “Not defined”.

The selected EVENT BLOCK number is the base for calculating the address (OA attribute) for the process objects.

The configurable STATION NUMBER is related to this configurable in that way, if the EVENT BLOCK is changed from default “Not defined” the STATION NUMBER an appropriate number.

COMMAND_BLOCK

Is the corresponding event block in the terminal were the output signals are connected to. Possible selections are:
* Not defined
* CM01-CM20
Default value is “Not defined”.

The selected COMMAND BLOCK number is the base for calculating the address (OA attribute) for the process objects.

The configurable STATION NUMBER is related to this configurable in that way, if the COMMAND BLOCK is changed from default “Not defined” the STATION NUMBER an appropriate number.

SYMBOL_WITH_BUTTON

This switch tells the picture to show the picture symbol or not. Default is TRUE (show the symbol)

SET_SWITCH_STATE_TO_AUTO

This switch tells the Process Object Tool to set the objects updating to AUTO. Default is FALSE (MANUAL state). It is only meaningful if the STATION NUMBER, EVENT-/ COMMAND BLOCK is set.

NO_PRIORITY

This switch tells the Process Object Tool to put the HV/voltage Control in priority mode or not. Default is FALSE (PRIORITY).

STATION_NUMBER

Any number between 0 and 2000. Default value is 0. This number is the UN attribute of the process objects. If the base system configuration is missing the STA object equal to this number or having the wrong station type, the installation process will either create or alter this STA definition. This base system update will only be valid until the next system restart. This action is promted during the installation.
The configurable EVENT BLOCK is related to this configurable in that way, if the STATION NUMBER is changed from default 0 the EVENT BLOCK should have a selection earlier not used within the STATION NUMBER.

For the version of 8.4.2 of MicroSCADA the STATION_NUMBER has callback function. STATION_NUMBER must be set before EVENT_BLOCK and COMMAND_BLOCK, otherwise those are dimmed.

- Select object tool and create the process object. Press Create and then OK. Before leaving the SCT, remember to save your changes by choosing Main | Save Attrib.

3.3.6.1 Installation process

The process database is updated with the process objects, `'P_OBJECT_LN':P,` created for the voltage control function(s) that has been installed and configured.

Scale `1_1:X` is created (modified if it exist) if it does not exist. This scale is demanded for the analogue objects of this function.

The command procedure `SPU_UPDATE:C` is created (modified if it exist). It is used for force up the data form the terminal when update deblock is performed.

Finally the datalog object `A_HTIMEOUT:D` is created (if it does not exist). This object is used for dialogue timeout of all HV/Voltage Control functions.

3.3.6.2 Delete process

When a HV/Voltage Control function is deleted, the process database is updated by the deletion of process objects, `'P_OBJECT_LN':P`.

3.3.7 Voltage control measurements

Measurements are optionally installed, and can only be used when the HV/Voltage Control function is installed because it uses the HV/Voltage Control function database. Install the HV/Voltage Control function(s) first and then the measurement(s). It is possible to use several measurements to one HV/Voltage Control function, then you can separate the values in the window.Measurements should not be installed if not needed.

- In the installation tool, choose LIB4/LIB520/HVPROCESS/Voltage Ctrl/Measurement. With Measurement highlighted, enter an ID for the function and press install. Place the picture function somewhere close to the HV/Voltage Control in the picture.

Bring up the SCT to alter the configurables.

Configurable	Choices
CONNECTED_TO_OBJECT	The picture function name of the HV/Voltage Control function which the Measurement function is connected to. Max length is 10 characters and default is “”.
SHOW_VALUES	Configurable which sets the default state of show/hide values at picture presentation. Toggling between show/hide is made from the main dialog of the HV/Voltage Control function. Notice that the toggle is returning back to default when leave and enter again the process picture. TRUE or FALSE, default is TRUE. (If no values want to be shown this function should not be installed.)
SHOW_SET_POINT_VALUE	Decides if SET_POINT_VALUE is to be shown. Selection is not toggable in run-time. TRUE or FALSE, default is TRUE.
SHOW_TAP_POSITION	Decides if TAP_POSITION is to be shown. Selection is not toggable in run-time. TRUE or FALSE, default is TRUE.
SHOW_OPERATOR_PLACE	Decides if OPERATOR_PLACE is to be shown. Selection is not toggable in run-time. TRUE or FALSE, default is TRUE.
SHOW_CONTROL_MODE	Decides if CONTROL_MODE is to be shown. Selection is not toggable in run-time. TRUE or FALSE, default is TRUE.

SHOW_OPERATION_MODE
Decides if OPERATION_MODE is to be shown. Selection is not toggable in run-time.
TRUE or FALSE, default is TRUE.

Before leaving the SCT, remember to save your changes by choosing Main | Save Attrib.

3.3.7.1 Installation process

Measurements uses the HV/Voltage Control function database.

3.3.7.2 Delete process

Measurements use the HV/Voltage Control function database.

3.4 Additional application engineering

3.4.1 Switch state

Immediately after installation, all process objects will have the switch state set to manual state (`SS = 1`), except process object with IX = 243 which is internal process oject and should always be updated automatically. Before commissioning, some process objects must be set to auto state (`SS = 2`). Until this is done, “Not connected to process” will be visible on the status bar in the Main Dialogue. See “Process objects” on page 55. regarding what process objects that has to be set to `SS=2`.

3.4.2 Addressing the process objects

Before the installed functions can communicate with the process, it is necessary to put addresses to all process objects that have the switch state set to auto.

3.4.3 Remaining tasks

Before commissioning you have to....

1. **address the transformer protection unit.**
2. **configure the base system for communication with transformer protection terminal.**
3. **configure LON HW and SW.**
4. **create and address process objects for signals that are not covered within the scope of HV/Voltage Control standard functions.**

The chapter "Technical descriptions"

1 Overview of the standard functions

The functions are designed to be as general as possible. This will make special configurations and customer demands much easier to fulfil for the application engineer. The number of versions of each function should be kept to a minimum.

The following functions are included in the HVLib:

SPI_TRANSB,
HV/Voltage Control with semigraphic size 3x3 (SPI_TRANSB). Full voltage control for power transformers in RET521.

SPI_TRANSX,
HV/Voltage Control measurement to install together with SPI_TRANSB. A window to show some values from the Voltage Control function.

1.1 HV/Voltage Control

Fig. 1 HV/Voltage Control symbol

Function name: `SPI_TRANSB.PIC`
File location in package: `HVPROCESS\INST`

1.1.1 Description

This function is used for:

- Monitoring and controlling the voltage on the secondary side of the power transformer.

1.1.2 Target systems

- RET 521

1.1.3 Communication support

- LON and SPA

1.1.4 Features

- Blocking/Deblocking of alarms, events, printout, update and remote events & indications
- Acknowledge alarms
- Help in all dialogues
- Change operation mode
- Change control mode
- Show regulation mode
- Show different control voltage
- Change the voltage control
- Load voltage adjustment
- Block activation
- Show blocking status
- Maintenance information
- Operation information
- Parallel blocking info

1.1.5 Process commands

Following process commands can be performed:

- Adjustment the voltage of the power transformer

1.2 HV/Voltage Control measurements

Fig. 2 HV/Voltage Control measurement symbol

Function name: `SPI_TRANSX.PIC`
File location in package: `HVPROCESS\INST`

1.2.0.1 Description

The measurements should not be considered as a true function, in comparision with functions such as voltage control, protections functions etc. Its purpose is to gather and in a short form display measurements made by the VCTR function, and some of its status information.

Measurements can only be used together with the HV/Voltage Control function because it uses the HV/Voltage Control function database. It is possible to show five values, Present Setpoint, Position of the tap changer, Operation mode, Control mode and Regulation mode and it is possible to present them in several windows that are connected to the same HV/Voltage Control function.

2 Tutorial

In this chapter the functionality of the standard functions is described. After general principles, the HV/Voltage Control function is described in detail.

2.1 General principles

Some principles are general (colours etc.). A description of these general principles follows below.

2.1.1 Colour coding

The colour coding below is applied generally. The colours are stated in priority order, e.g. red takes precedence over yellow.

Colour	Description
White flashing	Selected object under command
White	Selected on the MicroSCADA screen
Magenta	Not updated, obsolete value, not in use or not sampled
Red flashing	Unacknowledged alarm
Red	Acknowledged alarm or faulty state
Cyan	Update blocked or manually entered
Yellow	Warning or blockings (alarms, events, printouts)
Brown	Control blocked
Green	Normal state

2.1.2 Colour definitions

The table below gives definition of colours used for presentation of process symbols and symbols in object picture.

Table 1: Colour definitions used in HV/Voltage Control

Name	Colour definition
White	(“M”,27)
Magenta	(“M”,30)
Red	(“M”,16)
Yellow	(“M”,17)
Cyan	(“M”,29)
Brown	(“M”,28)
Green	(“M”,32)
Black	(“M”,14)

2.1.3 Attribute expressions for colour definitions

The following expressions and attributes are used to calculate the colour. See the section for each standard function, what indexes are used.

Table 2: Attributes expressions for colour presentation

Description	Attribute used	Colour	Comment
Selected object under command	`BI`	White flashing	
Selected on the MicroSCADA screen	`-`	White	The variable `‘CALL_ID’:VARMED` is used
Not sampled	`OS = 10`	Magenta	No value is presented

Table 2: Attributes expressions for colour presentation

Description	Attribute used	Colour	Comment
Obsolete value	`OS = 1-9`	Magenta	Last known value is presented
Unacknowledged alarm	`AR = 0`	Red flashing	-
Acknowledged alarm	`AL = 1`	Red	-
Update blocked	`BI`	Cyan	-
Manual state	`SS = 1`	Cyan	-
Alarms blocked	`AB = 1`	Yellow	Only for indexes with position 27 of RX attribute <> “X”
Events blocked	`HB = 1`	Yellow	Only for indexes with position 27 of RX attribute <> “X”
Printout blocked	`PB = 1`	Yellow	Only for indexes with position 27 of RX attribute <> “X”
Remote events and indications blocked	`XB = 1`	Yellow	Only for indexes with position 27 of RX attribute <> “X”
Control blocked	`BI`	Brown	

2.1.4 Selection

Selectable objects have “raised” areas according to Motif standard. There are no “hidden” functions.

Note that selectable is not the same as controllable. Pressing on a selectable object will bring up the main dialogue, from which other actions can be initiated.

Only one object can be selected per MicroSCADA screen. The selection of another one will automatically cancel the previous selection.

2.1.5 Indications

The indications are only used for monitoring and no actions.

The indications are presented in index order starting from the lowest index. The symbols are always square shape. Text describing symbol is fetched from data base `OX` attribute for the index.

Table 3: Indication symbols

Description	Attribute	OV = 0	OV = 1
In use	IU = 0	None	None
Not sampled	OS = 10	magenta “?”	magenta “?”
Obsolete value	OS = 1-9	magenta square	magenta filled square
Unacknowledged alarm	AR = 0	flashing red square	flashing filled red square
Acknowledged alarm	AL = 1	red square	red filled square
Manual state	SS = 1	cyan square	cyan filled square
Active blocking	HB or AB or PB or XB = 1	yellow square	yellow filled square
Normal state	otherwise	green square	green filled square

Representation symbols used for all indications are stored in the representation `SR_OBPIC` in representation file `SMOD\HVPROCESS\USE\SR_LIBFGH.PIR`.

2.1.6 Representation file

All representation symbols are stored in `S_USE\SR_LIBFGH.PIR` file, where `S_USE` is logical path as it is defined in `PATH4_S1.TXT` file. For HV/Voltage Control function an overview of used representations will be given separately. Standard colour definition used for presentation of symbols are given in “Colour definitions used in HV/Voltage Control” on page 30.

2.2 HV/Voltage Control

Below is a description of the functionality of the HV/Voltage Control.

2.2.1 General functionality

In this section a more general description of the functionality and performance is described.

2.2.1.1 History registrations

Always when the process objects 1..71 passes and alarm or warning limit, provided that no blocking is prevailing. Events are also generated when blocking (index 240..245) is performed.

2.2.1.2 Blockings

Process signals can be blocked from the blockings dialogue (events, alarms, printout update or remote events and indications). Other control system signals (internal signals) are not blocked by this facility.

2.2.1.3 System start-up

The process objects (index 1..71) are updated at system start up.

2.2.1.4 Process commands

Process commands can be issued for:

- Change the tap position
- Change control mode
- Change operation mode
- Adjust setpoint voltage with factor 1 to 4
- Block activation
- Reset number of operations
- Reset contact life counter

2.2.1.5 Internal (MicroSCADA) commands

Internal (MicroSCADA) commands can be issued for:

- Block/Deblock Alarms
- Block/Deblock Events
- Block/Deblock Printouts
- Block/Deblock Update
- Block/Deblock Remote events and indications

Authority level 1 or greater is required in order to issue the above commands.

2.2.1.6 Fictitious commands

Fictituos commands can be issued for editing alarm and warning limits.

2.2.2 Graphical representation

In this section details about the presentation, actions and conditions for the process picture are described.

2.2.2.1 Process presentation

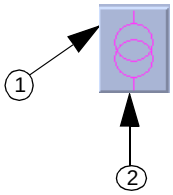

Fig. 3 Process representation for HV/Voltage Control.

The following information is displayed in the process picture:

- HV/Voltage Control status as summary colour information (alarms, blockings etc.)

The presentation below is, for each item, given in priority order. E.g. an alarm will always be shown before a blocking.

Table 4: Process picture representation for HV/Voltage Control

Description	Presentation	Colour	Expression
1. Select area	Unset Function key. (Not selected)	According to the colour definition for push buttons.	`'ID':VARMED = FALSE`
	Set Function key. (Selected)	According to the colour definition for the push button.	`'ID':VARMED = TRUE`
2. Status	symbol	2)	2)

[2)] See “Colour definitions used in HV/Voltage Control” on page 30. All objects of the standard function (which are in use) are used to express the proper colour defintion.

‘`ID`’ is the ID given during installation of the picture function, ‘`LN`’ is the logical name of the process objects.

The following actions can be performed from the process presentation:

Table 5: Actions possible from process presentation

Function	Condition(s)	Action
1. Selection	-	Present main dialogue

2.2.3 Dialogue structure

In this section details about the presentation, actions and conditions for the dialogues are described.

The dialogue structure is as follows:

Main Dialogue

- **Control Mode (Manual or Automatic)**
- **Operation Mode (Remote, Station, Station and Remote(No_Priority))**
- **Manual control (Lower or Raise)**

More button

- **Ack. Alarms**
- **Adjust load voltage**
- **Blockings (Block activation, Blockings, Blocking status)**
- **Maintenance**
- **Operation info**
- **Parallel info**

Close push button

Help button

2.2.3.1 Main dialogue

The Main Dialogue is displayed after clicking on the HV/Voltage Control function key.

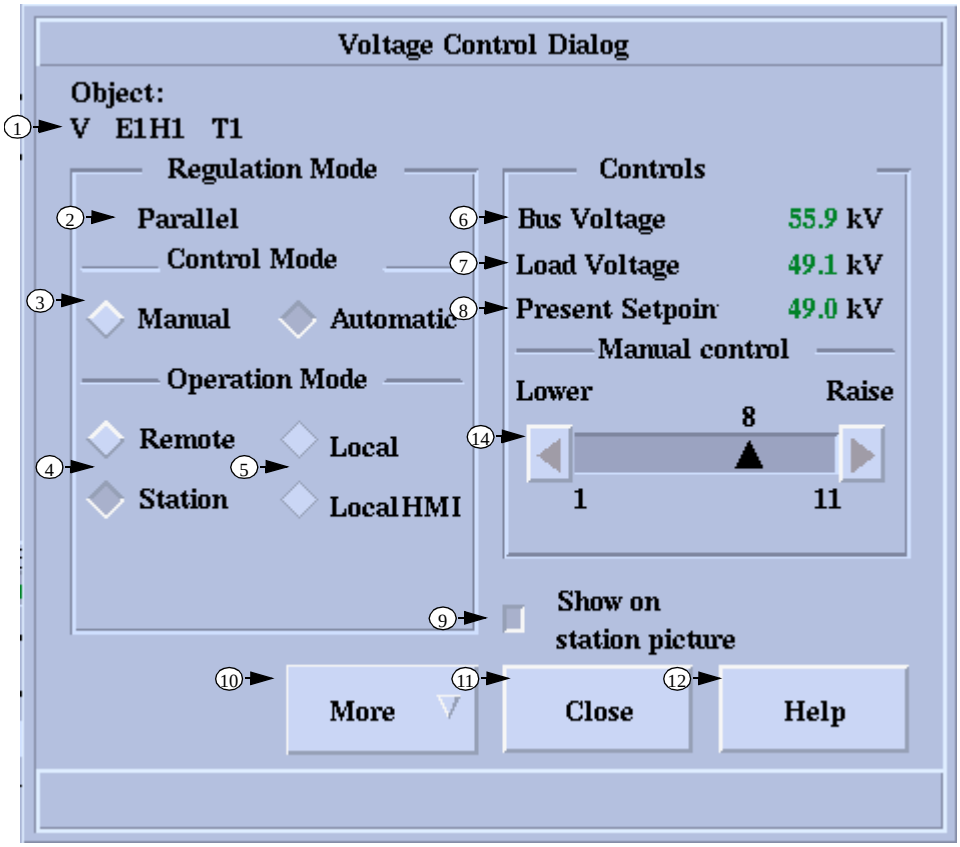

Fig. 4 Main dialogue for HV/Voltage Control, priority mode

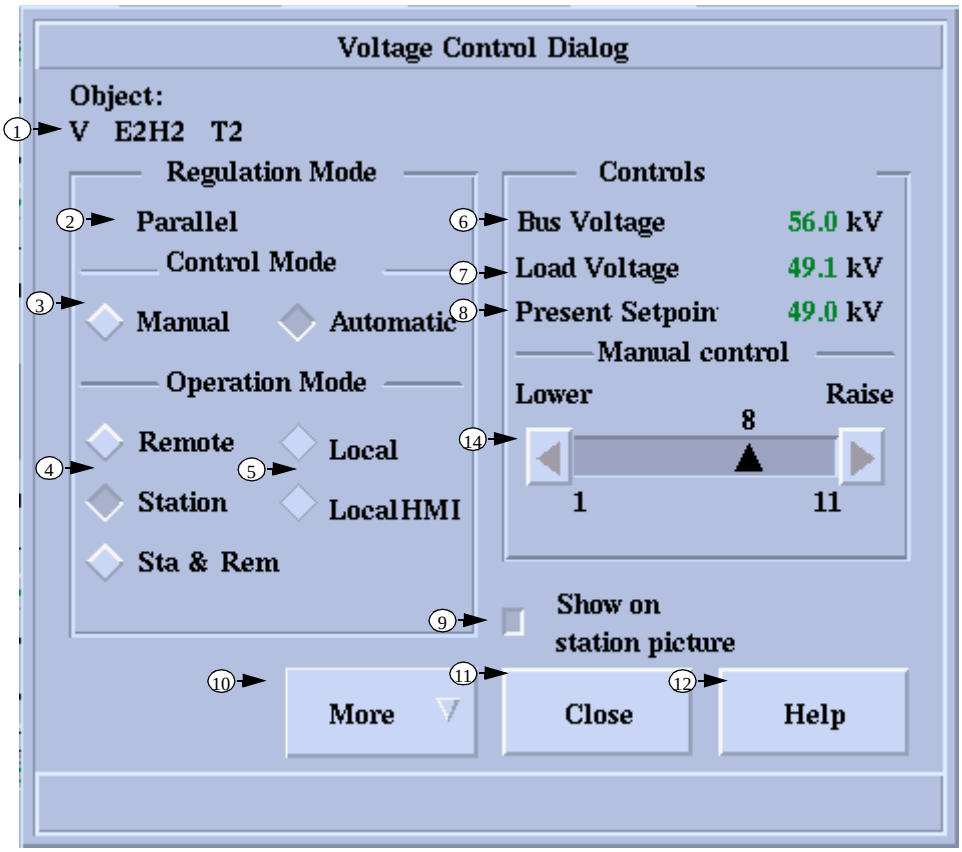

Fig. 5 Main dialogue for HV/Voltage Control, no priority mode

The following table lists values presented in the main dialogue. The descriptions are numbered as shown in the main dialogue figures.

Table 6: Voltage Control Dialog representation

Description	Presentation	Colour	Expression
1. Object name in textual form, logical name of station and bay			
2. Regulation Mode	Single, Parallel, Parallel/Adapt	Black	‘LN[1]’:P37-39
5. Operation Mode	Local, LocalHMI		‘LN’:P33-34
6. Bus Voltage	Value	[2]	‘LN’:P11
7. Load Voltage	Value	[2]	‘LN’:P13
8. Present Setpoint	Value	[2]	‘LN’:P14

1. ‘LN’ is the logical name of the process objects for the HV/Voltage Control function.

2. See “Colour definitions used in HV/Voltage Control” on page 30. All objects of the standard function (which are in use) are used to express the proper colour defintion.

The following actions can be performed from the main dialogue, numbered as shown in the main dialogue figures:

Table 7: Actions possible in the Main Dialogue

Function	Condition(s)	Action
Move	-	Move the dialogue to a new position
3. Control Mode	Operation Mode= Station	Change the Control Mode to Manual or Automatic mode
4. Operation Mode	Not Local or Local HMI for priority mode Not Local HMI for no priority mode	Change the Operation mode to Station or Remote. For no priority mode also to Station and Remote.
14. Manual Control	Operation Mode=Station and Control Mode= Manual	Change the position of the tap changer
9. Show on station picture	Show_values is set in the configurable attributes	Show/Hide the measurement function (if this is used)
11. Close	-	Close the main control window
12. Help	-	Open help window
13. Close	-	Close the main control window
10. More Button	-	Possible to select other dialogs
Acknowledge alarms (MORE BUTTON)	Authority level >= 1	Display acknowledge alarm picture
Adjust load voltage (MORE BUTTON)	-	Bring up adjust load voltage dialogue
Block activation (MORE BUTTON)	-	Bring up block activation dialogue
Blockings (MORE BUTTON)	-	Bring up blockings dialogue
Blocking status (MORE BUTTON)	-	Bring up blocking status dialgue
Maintenance (MORE BUTTON)	-	Bring up maintenance dialogue
Operation info (MORE BUTTON)	-	Bring up operation info dialogue
Parallel info (MORE BUTTON)	Regulation Mode <> Single	Bring up parallel info dialogue
13. The status	-	The HV/Voltage Control status

If no action is performed within a certain timeout, then the dialogue window, with exception of object picture, is closed. The dialogues window are also closed if any other function is selected on the MicroSCADA screen.

2.2.3.2 Acknowledge alarms

All alarms can be acknowledged per object. This option is accessible from main dialogues “More” button after choosing of the option “Ack.alarms...”.

Text message that appears depends on if active alarms exists or not for the selected object. This picture is not movable separately, but always follows Main Dialogue.

However, all alarms are always included in the alarm list accessible on menu bar in the base picture. In this list, alarms can be acknowledged on selective way per active alarm, or all active alarms at the time.

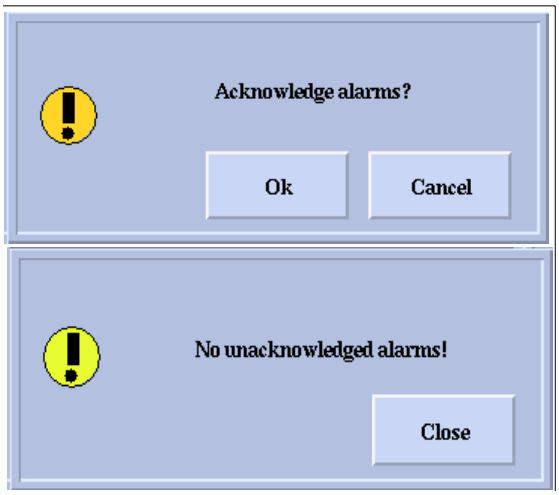

Fig. 6 Acknowledge alarms pictures

2.2.3.3 Adjust load voltage

The following information is displayed in the Adjust load voltage dialogue:

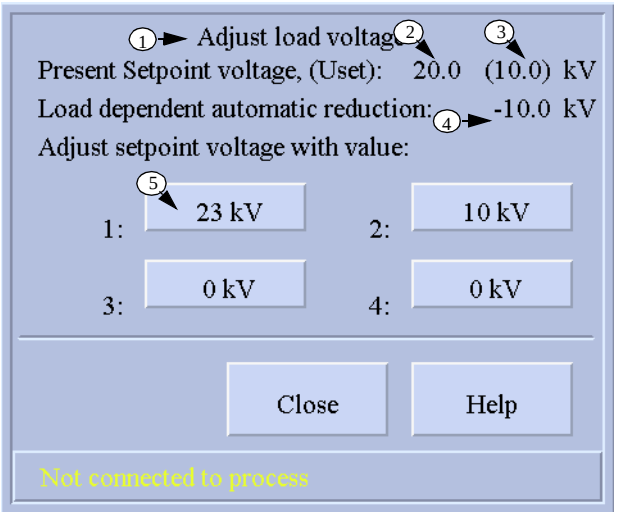

Fig. 7 Adjust load voltage dialogue for HV/Voltage Control.

The following table lists the data presented, numbered as in the above figure.

Table 8: Parallel info presentation

Description	Presentation	Colour	Expression
1. Title bar			
2. ACTUAL USET	Value	1	‘LN[2]’:P14
3. USET	Value	1	‘LN’:P12
4. VRAUTO	Value	1	‘LN’:P26
5. LVACONST1 - 4	Value	1	‘LN’:P27-30

1. See “Colour definitions used in HV/Voltage Control” on page 30. All objects of the standard function (which are in use) are used to express the proper colour defintion.

2. ‘LN’ is the logical name of the process objects for the HV/Voltage Control function.

The following actions can be performed from the Adjust load voltage dialogue:

Table 9: Actions possible in the Adjust load voltage dialogue

Function	Condition(s)	Action
LV1 - LV4	-	Activation of factor 1 - 4
Close	-	Erase the object picture
Help	-	Display help viewer with help about the object picture

If no action is performed within a certain timeout, then the dialogues are erased. The dialogues are also erased if any other function is selected in the process picture.

2.2.3.4 Block activation

The following information is displayed in the Block activation dialogue:

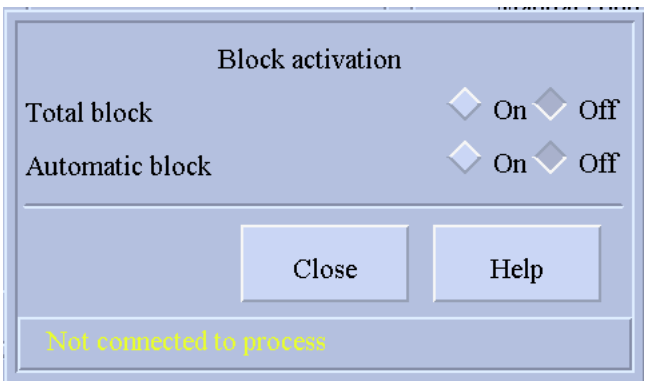

Fig. 8 Block activation dialogue for HV/Voltage Control.

The following actions can be performed from the Block activation dialogue:

Table 10: Actions possible in the Block activation dialogue

Function	Condition(s)	Action
TOTBLK	-	Total blocking On/Off
AUTOBLK	-	Auto mode blocking On/Off
Close	-	Erase the object picture
Help	-	Display help viewer with help about the object picture

If no action is performed within a certain timeout, then the dialogues (except the object picture) are erased. The dialogues are also erased if any other function is selected in the process picture.

2.2.3.5 Blockings

Signals coming from the process can be blocked for five different purposes:

- Event blockings
- Alarm blockings
- Printout blockings
- Update blockings
- Remote events and indications

Blockings can be made from each function. The blocking is made by setting of the corresponding process object attribute HB (event block), AB (alarm block), PB (printout block), UB (Update block) or XB (activation block - for remote events and indications). This means that these blockings are internal in the MicroSCADA. UB causes the values to be obsolete (Magenta), deblock will return the colour to green.

Blocking function is executed by retrieval of the whole database. Condition for blocking is the OI attribute. Note thus that it is very important to configure the OI attribute correctly in order to have the blocking function to work. See “Object identifier” on page 15..

Blocking and deblocking can be performed from the blocking dialogue that is reached from the main menu by pushing drop-down button “More” and then selecting of “Blockings >”, “Blockings...”. Blocking dialogue is placed over the Main dialogue of the concerning standard function on such way that title and info bar of the Main Dialogue is used, as well as the process object name.

Blockings are presented in Blocking status dialogue according to “Colour coding” on page 29.

Following information is displayed in the Blockings Dialogue:

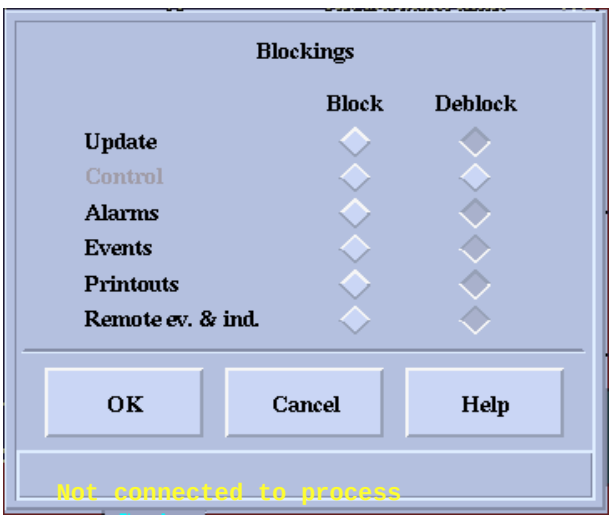

Fig. 9 HV/Voltage Control Blockings dialogue

The following actions can be performed from the Blockings Dialogue:

Table 11: Actions possible in the Blockings dialogue

Function	Condition	Action
Move	-	Movement is made by moving the main dialogue.
Block events	Authority level>=1	- Set HB=1 for selected objects[1] - Set index 240 to 1[1]
Deblock events	Authority level>=1	- Set HB=0 for selected objects[1] - Set index 240 to 0[1]
Block alarms	Authority level>=1	- Set AB=1 for selected objects[1] - Set index 241 to 1[1]
Deblock alarms	Authority level>=1	- Set AB=0 for selected objects[1] - Set index 241 to 0[1]
Block printout	Authority level>=1	- Set PB=1 for selected objects[1] - Set index 242 to 1[1]
Deblock printout	Authority level>=1	- Set PB=0 for selected objects[1] - Set index 242 to 0[1]
Block update	Authority level>=1	- Set UB=1 for selected objects[1] - Set index 245 to 1[1]
Deblock update	Authority level>=1	- Set UB=0 for selected objects[1] - Set index 245 to 0 and trig SPU_UPDATE:C.[1]
Block Remote events and indica-tions	Authority level>=1	- Set XB=1 for selected objects[1] - Set index 244 to 1[1]
Deblock Remote events and indica-tions	Authority level>=1	- Set XB=0 for selected objects[1] - Set index 244 to 0[1]
OK	Authority level >= 1	Execute the blocking actions according to what is set by the buttons explained above. Return to the main dialogue
Cancel	-	Erase the Blocking dialogue and return to the main dialogue, without changing the limits.
Help	-	Display help viewer with help about the HV/Voltage Control blocking dialogue

1. No action is performed until the ‘OK’ button is pressed.

Blocking and deblocking require authority level >=1 (Operator authority). If blocking or deblocking is not permitted, the function key is dimmed.

If no action is performed within a certain timeout, then the dialogues (except the object picture) are erased. The dialogues are also erased if any other function is selected in the process picture.

2.2.3.6 Blocking status

The following information is displayed in the Blocking status:

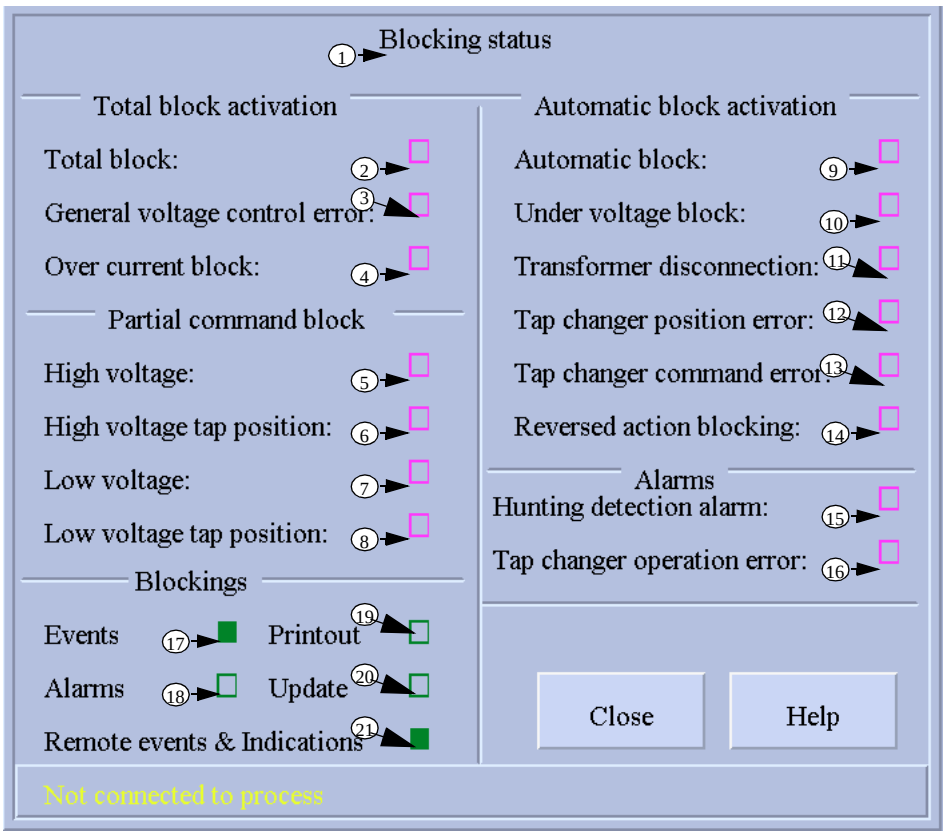

Fig. 10 Blocking status dialogue for HV/Voltage Control.

The following table lists the data presented, numbered as in the figure:

Table 12: Blocking status representation

Description[1]	Presentation	Colour	Expression
1. Title bar			
2. TOTBLKD	Value	[2]	‘LN’:P51
3. ERROR	Value	[2]	‘LN’:P40
4. IBLK	Value	[2]	‘LN’:P53
5. UMAX	Value	[2]	‘LN’:P58

Table 12: Blocking status representation

Description[1]	Presentation	Colour	Expression
6. HIPOS	Value	[2]	‘LN’:P57
7. UMIN	Value	[2]	‘LN’:P59
8. LOPOS	Value	[2]	‘LN’:P56
9. AUTOBLKD	Value	[2]	‘LN’:P52
10. UBLK	Value	[2]	‘LN’:P54
11. TFODISC	Value	[2]	‘LN[3]’:P60
12. POSERR	Value	[2]	‘LN’:P41
13. CMDERR	Value	[2]	‘LN’:P42
14. REVACBLK	Value	[2]	‘LN’:P55
15. HUNTING	Value	[2]	‘LN’:P45
16. TCERR	Value	[2]	‘LN’:P43
17. EVENTS	Value	[2]	‘LN’:P240
18. ALARMS	Value	[2]	‘LN’:P241
19. PRINTOUT	Value	[2]	‘LN’:P242
20. REMIND	Value	[2]	‘LN’:P244
21. UPDATE	Value	[2]	‘LN’:P245

1. For an explanation of presentation and colours, see “Indications” on page 31

2. See “Colour definitions used in HV/Voltage Control” on page 30. All objects of the standard function (which are in use) are used to express the proper colour defintion

3. ‘LN’ is the logical name of the process objects for the HV/Voltage Control function.

The following actions can be performed from the Blocking status dialogue:

Table 13: Actions possible in the Blocking status dialogue

Function	Condition(s)	Action
Close	-	Erase the object picture
Help	-	Display help viewer with help about the object picture

If no action is performed within a certain timeout, then the dialogues (except the object picture) are erased. The dialogues are also erased if any other function is selected in the process picture.

2.2.3.7 Maintenance

The following information is displayed in the Maintenance dialogue:

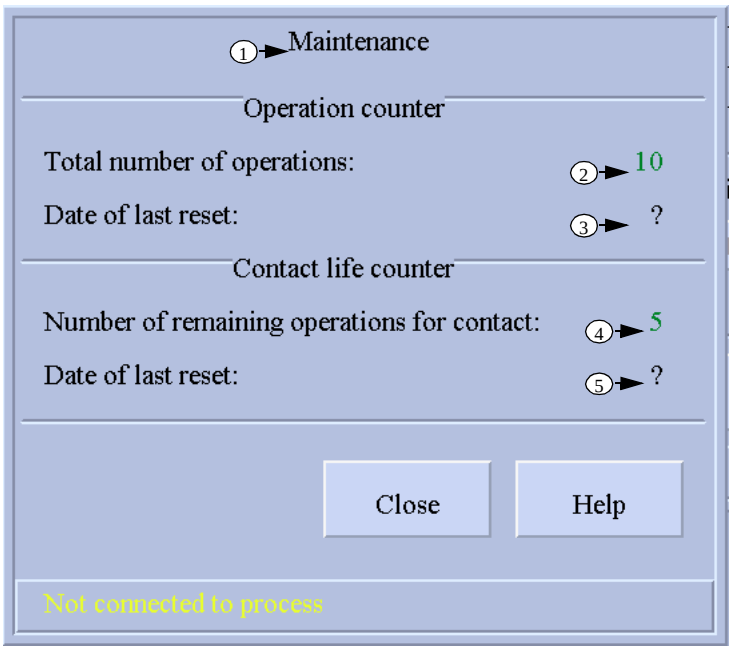

Fig. 11 Maintenance dialogue for HV/Voltage Control.

The following table lists the data presented, numbered as in the figure.

Table 14: Maintenance representation

Description	Presentation	Colour	Expression
1. Title bar			
2. NOOFOPERATIONS	Value	[1]	‘LN[2]’:P15
3. OPCNTRESETDAT	String	[1]	‘LN’:P61
4. CONTACTLIFE	Value	[1]	‘LN’:P16
5. CLRESETDATE	String	[1]	‘LN’:P62

1. See “Colour definitions used in HV/Voltage Control” on page 30. All objects of the standard function (which are in use) are used to express the proper colour defintion

2. ‘LN’ is the logical name of the process objects for the HV/Voltage Control function.

The following actions can be performed from the Maintenance dialogue:

Table 15: Actions possible in the Maintenance dialogue

Function	Condition(s)	Action
Close	-	Erase the object picture
Help	-	Display help viewer with help about the object picture

If no action is performed within a certain timeout, then the dialogues (except the object picture) are erased. The dialogues are also erased if any other function is selected in the process picture.

2.2.3.8 Operation information

The following information is displayed in the Operation information:

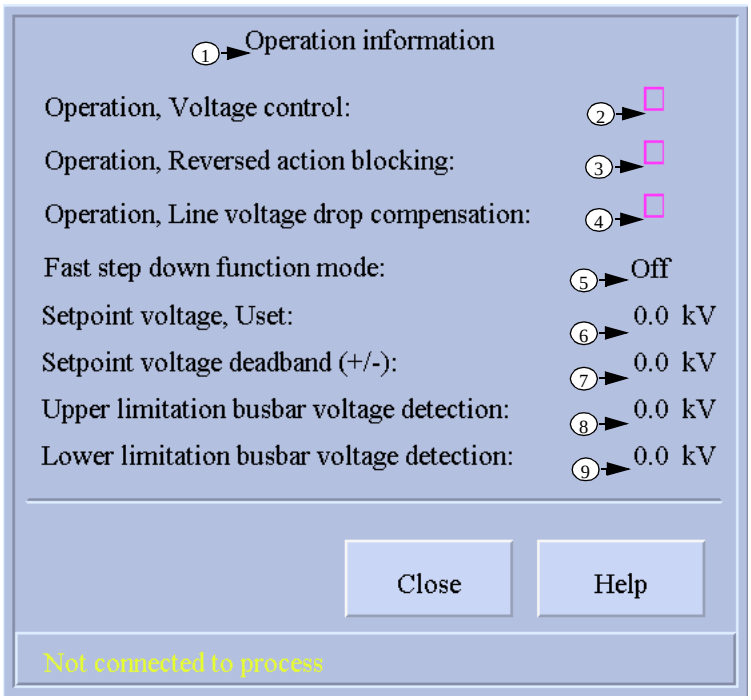

Fig. 12 Operation information dialogue for HV/Voltage Control.

The following table lists the data presented, numbered as in the figure.

Table 16: Operation information representation

Description	Presentation	Colour	Expression
1. Title bar			
2. OPERATION	[1]	[1]	‘LN[2]’:P65
3. OPERATIONRA	[1]	[1]	‘LN’:P66
4. OPERATIONLDC	[1]	[1]	‘LN’:P67
5. FSDMODE	0=Off 1=Auto 2=Automan	[3]	‘LN’:P68
6. USET	Value	[3]	‘LN’:P12
7. UDEADBAND	Value	[3]	‘LN’:P69
8. ULMAX	Value	[3]	‘LN’:P70
9. ULMIN	Value	[3]	‘LN’:P71

1. See “Indications” on page 31.

2. ‘LN’ is the logical name of the process objects for the HV/Voltage Control function

3. See “Colour definitions used in HV/Voltage Control” on page 30. All objects of the standard function (which are in use) are used to express the proper colour defintion.

The following actions can be performed from the Operation information dialogue:

Table 17: Actions possible in the Operation information dialogue

Function	Condition(s)	Action
Close	-	Erase the object picture
Help	-	Display help viewer with help about the object picture

If no action is performed within a certain timeout, then the dialogues (except the object picture) are erased. The dialogues are also erased if any other function is selected in the process picture.

2.2.3.9 Parallel info

The following information is displayed in the Parallel info:

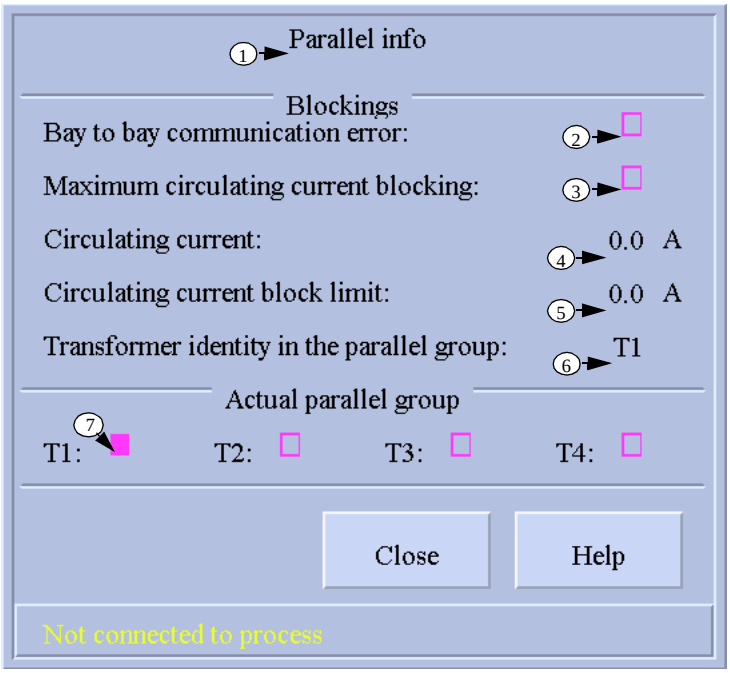

Fig. 13 Parallel info dialogue for HV/Voltage Control.

The following table lists the data presented, numbered as in the figure.

Table 18: Parallel info representation

Description	Presentation	Colour	Expression
1. Title bar			
2. COMERR	1	1	‘LN[2]’:P44
3. ICIRC	1	1	‘LN’:P25
4. CIRCCUR-RENT	Value	3	‘LN’:P72
5. CIRCCUR-RLIMIT	Value	3	‘LN’:P73

Table 18: Parallel info representation

Description	Presentation	Colour	Expression
6. TIDENTITY	0=T1 1=T2	[3]	`'LN':P74`
7. T1PG-T4PG	[1]	[1]	`'LN':P21-24`

1. See “Indications” on page 31.

2. ‘LN’ is the logical name of the process objects for the HV/Voltage Control function.

3. See “Colour definitions used in HV/Voltage Control” on page 30. All objects of the standard function (which are in use) are used to express the proper colour defintion.

The following actions can be performed from the Parallel info dialogue:

Table 19: Actions possible in the Parallel info dialogue

Function	Condition(s)	Action
Close	-	Erase the object picture
Help	-	Display help viewer with help about the object picture

If no action is performed within a certain timeout, then the dialogues (except the object picture) are erased. The dialogues are also erased if any other function is selected in the process picture.

2.2.3.10 HV/Voltage Control status

HV/Voltage Control status is presented on the status bar for each dialogue. Status messages in falling priority for the apparatus are:

- Not connected to process (see “Process Objects” on page 62)
- Not updated

2.3 HV/Voltage Control measurements

2.3.1 General functionality

Measurements can only be used together with the HV/Voltage Control function because it uses the HV/Voltage Control function database. It it possible to show five values, Present Setpoint, Position of the tap changer, Operation mode, Control mode and Regulation mode and it is possible to present them in several windows that are connected to the same HV/Voltage Control function.

2.3.2 Graphical representation

2.3.2.1 Process presentation

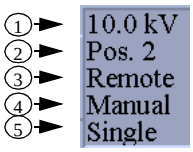

Fig. 14 Process representation for HV/Voltage Control Measurement.

The following table lists the data presented, numbered as in the figure.

Table 20: HV/Voltage Control Measurement representation

Description	Presentation	Colour	Expression
1. Present Setpoint	Value	[1]	`'LN[2]':P14`
2. Position of the tap changer	Value	[1]	`'LN':P10`
3. Operation mode	Remote, Station, Local, LocHMI, St/Re/Lo, St/Re, St/Lo, Re/Lo	[1]	`'LN':P31-34`
4. Control Mode	Manual, Auto	[1]	`'LN':P35-36`
5. Regulation Mode	Single, Parallel, Par/Adapt	[1]	`'LN':P37-39`

1. See “Colour definitions used in HV/Voltage Control” on page 30. All objects of the standard function (which are in use) are used to express the proper colour defintion.

2. ‘LN’ is the logical name of the process objects for the HV/Voltage Control function.

Appendix

1 Application engineering information

Listed here are all files that are needed during runtime, in order to make a built function operate properly, such as format pictures, dialogue pictures, text files and help files.

1.1 Process objects

The process objects related to this function are described in “Process Objects” on page 62.

1.2 Format pictures

Format pictures used during runtime for event and alarm presentation. All pictures are stored in the directory `\sc\Lib4\Smod\HVPROCESS\Use`.

Table 1:

Filename	Name
`FORM4S002.PIC`	Process blockings
`FORM4S003.PIC`	Process alarms
`FORM4S004.PIC`	Process on/off signals
`FORM4S008.PIC`	Process analog values
`FORM4S013.PIC`	Process function orders

1.3 Dialogue pictures

Files used during runtime in process pictures.All pictures are stored in the directory `\sc\Lib4\Smod\HVPROCESS\Use`.

Table 2:

Filename	Name
`SPU_TRANSA.PIC`	Main dialogue
`SPU_TRANSC.PIC`	Adjust load voltage
`SPU_TRANSK.PIC`	Block activation
`SPU_TRANSD.PIC`	Blockings
`SPU_TRANSE.PIC`	Blocking status
`SPU_TRANSH.PIC`	Maintenance
`SPU_TRANSB.PIC`	Operation info
`SPU_TRANSF.PIC`	Parallel info

1.4 Installation files

Files used during installation and configuration of the function. All files are stored in the directory `\sc\Lib4\Smod\HVPROCESS\Inst`.

Table 3:

Filename	Name
`SPI_TRANS.DAT`	Standard configuration data file
`SPI_TRANSB.PIC`	Picture function file
`SPI_TRANSX.DAT`	Standard configuration data file for measurement window
`SPI_TRANSX.PIC`	Picture function file for measurement window

1.5 Texts

Text files which are language dependable used during installation/configuration and runtime. All files are stored in the directory `\sc\Lib4\Smod\HVPROCESS\Lang`*n*, where *n* is a number expressing the used language. Normally, `Lang0` is used, where 0 means english.

Table 4:

Filename	Name
`SPU_TRANSA.HLP`	Main dialogue help texts
`SPU_TRANSC.HLP`	Adjust load voltage dialogue help texts
`SPU_TRANSK.HLP`	Block activation dialogue help texts
`SPU_TRANSD.HLP`	Blockings dialogue help texts
`SPU_TRANSE.HLP`	Blocking status dialogue help texts
`SPU_TRANSH.HLP`	Maintenance dialogue help texts
`SPU_TRANSB.HLP`	Operation info dialogue help text
`SPU_TRANSF.HLP`	Parallel info dialogue help text
`SPU_TRANSX.HLP`	Measurement window help text
`SPU_TRANS.TXT`	Operator dialogue texts

1.6 Runtime files

Text files containing SCIL code used during runtime. All files are stored in the directory `\sc\Lib4\Smod\HVPROCESS\Use`.

Table 5:

Filename	Name
`SPU_UPDATE.TXT`	Command file for force up value after Update deblock

2 Complete file listing

This section contains a complete list of all files included in HV/Voltage Control package:

2.1 Installation files

The following files are used during installation of the standard function and are located in the directory `\sc\Lib4\Smod\HVPROCESS\Inst`:

Table 6:

File	Description
`SPI_TRANSB.PIC`	Voltage Control function picture
`SPI_TRANS.DAT`	Voltage Control installation setup file
`SPI_TRANSX.PIC`	Measurement window function picture
`SPI_TRANSX.DAT`	Measurement window function setup file

2.2 Dialogue files

The following files are used as dialogues of the standard function and are located in the directory `\sc\Lib4\Smod\HVPROCESS\Use`:

Table 7:

File	Description
`spu_TRANSA.pic`	Main dialogue for the Voltage Control function
`spu_TRANSC.pic`	Adjust load voltage dialogue for the Voltage Control function
`spu_TRANSK.pic`	Block activation dialogue for the Voltage Control function
`spu_transd.pic`	Blockings dialogue for the Voltage Control function
`spu_transe.pic`	Blocking status dialogue for the Voltage Control function
`spu_TRANSH.pic`	Maintenance dialogue for the Voltage Control function
`spu_transb.pic`	Operation info dialogue for the Voltage Control function
`spu_TRANsf.pic`	Parallel info dialogue for the Voltage Control function

2.3 Format picture files

The following files are used as format pictures of the standard function and are located in the directory `\sc\Lib4\Smod\HVPROCESS\Use`:

Table 8:

File	Description
`form4s002.pic`	Blocking events
`form4s003.pic`	Alarm events
`form4s004.pic`	On/off events
`form4s008.pic`	Analog value events
`form4s013.pic`	Process station orders

2.4 Run-time command files

The following files are used during run-time and are located in the directory `\sc\Lib4\Smod\HVPROCESS\Use`:

Table 9:

File	Description
`spu_UPDATE.TXT`	Force up values after update deblock for HV/Voltage Control.

2.5 Run-time text files

The following files are used during run-time for text presentation and are located in the directory `\sc\Lib4\Smod\HVPROCESS\Lang0`:

Table 10:

File	Description
`form4s002.txt`	Texts for format picture form4s002
`form4s003.txt`	Texts for format picture form4s003
`form4s004.txt`	Texts for format picture form4s004
`form4s008.txt`	Texts for format picture form4s008
`form4s013.txt`	Texts for format picture form4s013
`sgu_info.txt`	Dialogue texts for the SGU_INFO dialogue
`sgu_info2.txt`	Dialogue texts for the SGU_INFO2 dialogue
`sgu_info3.txt`	Dialogue texts for the SGU_INFO3 dialogue

2.6 Installation text files

The following files are used during installation for generation of object texts (OX attributes of the process objects) and are located in the directory `\sc\Lib4\Smod\HVPROCESS\Lang0`:

Table 11:

File	Description
`spi_TRANS.txt`	Process object texts (for OX attribute) for the HV/Voltage Control function

2.7 Help files

The following files are used in the help dialogues and are located in the directory `\sc\Lib4\Smod\HVPROCESS\Lang0`:

Table 12:

File	Description
`SPI_TRANS.hlp`	Help for the Configuration tool for the Voltage Control function
`spu_transa.hlp`	Help for the main dialogue for the Voltage Control function
`spu_transc.hlp`	Help for the adjust load voltage dialogue for the Voltage Control function
`spu_transk.hlp`	Help for the block activation dialogue for the Voltage Control function
`spu_transd.hlp`	Help for the blockings dialogue for the Voltage Control function
`spu_transE.hlp`	Help for the blocking status dialogue for the Voltage Control function
`spu_transH.hlp`	Help for the maintenance dialogue for the Voltage Control function
`spu_transb.hlp`	Help for the operation info dialogue for the Voltage Control function
`spu_transf.hlp`	Help for the parallel info dialogue for the Voltage Control function

2.8 Representation files

The following files are used to store representations and are located in the directory `\sc\Lib4\Smod\HVPROCESS\Use`:

Table 13:

File	Description
`SR_LIBFGH.pir`	HV window representation file
`slib.pir`	SLIB representation file

3 Window representations

The following HV/Voltage Control representations are stored in the file `\sc\Lib4\Smod\HVPROCESS\Use\SR_LIBFGH.pir`:

Table 14:

Name	Description
`SR_OBPIC`	Object pictures representation
`S_TRANS1`	Voltage Control; Process picture representation, vertical, size 3*3
`S_TRANS2`	Voltage Control; Process picture representation, horizontal, size 3*3
`S_TRANS3`	Voltage Control; Process picture representation, vertical, size 2*2
`S_TRANS4`	Voltage Control; Process picture representation, horizontal, size 2*2
`S_TRANS5`	Voltage Control; Process picture representation, vertical, size 3*3, 3-winding left
`S_TRANS6`	Voltage Control; Process picture representation, vertical, size 3*3, 3-winding right

4 Process Objects

In this section the process objects belonging to the different standard functions are described. First are the different types stated.

4.1 Type definitions

The following basic types of process objects are defined for the HVLib. In the tables below “SPA” type objects are defined. For “LON” type objects (Station type “REX”), the DX attributes all start with `X` instead of `N`, e.g. `X7S` instead of `N7S`:

Table 15: Process object type 1

Attribute list	General Alarm with event handling via SPA	Description
DX	N7S	Directive Text
PT	BI	Process Object Type
OT	DEC	Output type
IU	YES	In Use
SS	MAN	Switch state
EE	YES	Event enable
HE	YES	History enabled
HA	NEW VALUE	History activation
HF	YES	History at first update
HL	32768	History log number
BI	0	Binary input value
RC	YES	Acknowledge required
AB	NO	Alarms blocked
AC	1	Alarm class
PI	ALARMS	Alarm picture
AG	1	Alarm generation
PD	1, 2, 3, 4, 5	Monitor number
PA	NEW VALUE	Printout activated at
PU	YES	Printout at first update
AD	0	Alarm delay
LD	1, 2	Listing device number

Table 16: Process object type 3

Attribute list	General Indications with event handling via SPA	Description
DX	N7S	Directive Text
PT	BI	Process Object Type
OT	DEC	Output type
IU	YES	In Use
SS	MAN	Switch state
EE	YES	Event enable
HE	YES	History enabled
HA	NEW VALUE	History activation
HF	YES	History at first update
HL	32768	History log number
BI	0	Analog input value
RC	YES	Acknowledge required
AB	NO	Alarms blocked
AC	0	Alarm class
PI	ALARMS	Alarm picture
PD	1, 2, 3, 4, 5	Monitor number
PA	NEW VALUE	Printout activated at
PU	YES	Printout at first update
AD	0	Alarm delay
LD	1,2	Listing device number

Table 17: Process object type 6

Attribute list	General process orders with event handling via SPA	Description
DX	N4	Directive Text
PT	AO	Process Object Type
OT	DEC	Output type
IU	YES	In Use
SS	MAN	Switch state
EE	YES	Event enable
HE	YES	History enabled
HA	UPDATE	History activation
HF	YES	History at first update
HL	32768	History log number
AO	0.0	Analogue output value
RC	YES	Acknowledge required
AB	NO	Alarms blocked
AC	0	Alarm class
PI	ALARMS	Alarm picture
PD	1, 2, 3, 4, 5	Monitor number
PA	UPDATE	Printout activated at
PU	YES	Printout at first update
AD	0	Alarm delay
LD	1, 2	Listing device number
SN	1_1	Scale

Table 18: Process object type 8

Attribute List	General Indication without event handling via SPA	Description
DX	N7S	Directive Text
PT	BI	Process Object Type
OT	DEC	Output type
IU	YES	In Use
SS	MAN	Switch state
EE	YES	Event enable
HE	NO	History enabled
BI	0	Binary input value
RC	YES	Acknowledge required
AB	NO	Alarms blocked
AC	0	Alarm class
PI	ALARMS	Alarm picture
PD	1, 2, 3, 4, 5	Monitor number
PA	NEW VALUE	Printout activated at
PU	YES	Printout at first update
AD	0	Alarm delay

Table 19: Process object type 9

	AI with event handling via SPA	Description
DX	N6	Directive Text
PT	AI	Process Object Type
OT	DEC	Output type
IU	YES	In Use
SS	MAN	Switch state
EE	YES	Event enable
HE	YES	History enabled
HA	WARNING	History activation
HF	YES	History at first update
HL	32768	History log number
AI	0.0	Analogue input value
HI	0.0	High alarm limit
HW	0.0	High warning limit
LW	0.0	Low warning limit
LI	0.0	Low alarm limit
SN	1_1	Scale name
SZ	SCADA	Limits supervised by
RC	YES	Acknowledge required
AB	NO	Alarms blocked
AC	1	Alarm class
PI	ALARMS	Alarm picture
PD	1, 2, 3, 4, 5	Monitor number
PA	WARNING	Printout activated at
PU	YES	Printout at first update
AD	0	Alarm delay
LD	1, 2	Listing device number

Table 20: Process object type 10

Attribute List	Digital input for internal function block	Description
PT	DI	Process Object Type
OT	DEC	Output type
IU	YES	In Use
SS	AUTO	Switch state
EE	NO	Event enable
HE	NO	History enabled
DI	0	Digital input value
RC	NO	Acknowledge required
AB	NO	Alarms blocked
AC	0	Alarm class
LD	0	Listing device number

4.2 HV/Voltage Control

Table 21: Process Objects for HV/Voltage Control

IX	Type	OB	Description (OX)	Format picture	RX (10 last characters)
1[1]	9	[4)]	Ur2	FORM4S008	SPTAVRmur2
2[1]	3	0[3)]	Tap changer in operation	form4s004	SPTAVRiTOP
10[1]	9	[4)]	Tap position	form4s008	SPTAVRmPOS
11[1]	9	[4)]	Bus voltage	FORM4S008	SPTAVRmBVO
12[1]	9	[4)]	Uset	FORM4S008	SPTAVRmuse
13[1]	9	[4)]	Load voltage	FORM4S008	SPTAVRmlvo
14[1]	9	[4)]	Present Setpoint	FORM4S008	SPTAVRsset
15[1]	9	[4)]	Total no of operations	FORM4S008	SPTAVRmcou
16[1]	9	[4)]	Number of remaining op for con	FORM4S008	SPTAVRmcou
21[1]	3	10[3)]	T1 connected to parallel group	FORM4S004	SPTAVRicpg
22[1]	3	11[3)]	T2 connected to parallel group	FORM4S004	SPTAVRicpg
23[1]	3	12[3)]	T3 connected to parallel group	FORM4S004	SPTAVRicpg
24[1]	3	13[3)]	T4 connected to parallel group	FORM4S004	SPTAvricpg
25[1]	1	9[3)]	Maximum circulation current	FORM4S003	SPTAVRImcc
26[1]	9	[4)]	Load dependent auto. reduction	FORM4S008	SPTAVRilvf
27[1]	9	[4)]	Load voltage adjust factor 1	FORM4S008	SPTAVRilvf
28[1]	9	[4)]	Load voltage adjust factor 2	FORM4S008	SPTAVRilvf
29[1]	9	[4)]	Load voltage adjust factor 3	FORM4S008	SPTAVRilvf
30[1]	9	[4)]	Load voltage adjust factor 4	FORM4S008	SPTAVRilvf

Table 21: Process Objects for HV/Voltage Control

IX	Type	OB	Description (OX)	Format picture	RX (10 last characters)
31[1]	3	0[2]	Remote operation mode	form4s004	SPTAVRirom
32[1]	3	1[2]	Station operation mode	form4s004	SPTAVRiSom
33[1]	3	2[2]	Local operation mode	form4s004	SPTAVRiLOm
34[1]	3	3[2]	Local MMI operation mode	form4s004	SPTAVRimom
35[1]	3	4[2]	Manual control mode	form4s004	SPTAVRimcm
36[1]	3	5[2]	Automatic control mode	form4s004	SPTAVRiacm
37[1]	3	5[3]	Single regulation mode	form4s004	SPTAVRisrm
38[1]	3	6[3]	Parallel regulation mode	form4s004	SPTAVRiprm
39[1]	3	7[3]	Parallel/Adapt regulation mode	form4s004	SPTAVRipam
40[1]	1	14[4]	General voltage control error	form4s003	SPTAVRigve
41[1]	1	1[3]	Tap changer position error	form4s003	SPTAVRitpe
42[1]	1	2[3]	Tap changer command error	form4s003	SPTAVRitce
43[1]	1	11[2]	Tap changer operation error	form4s003	SPTAVRitoe
44[1]	1	8[3]	Bay to bay communication error	form4s003	SPTAVRibce
45[1]	1	8[2]	Hunting detection alarm	form4s003	SPTAVRiHda
51[1]	3	14[2]	Total block activation	form4s002	SPTAVRitba
52[1]	3	6[2]	Automatic block activation	form4s002	SPTAVRiaba
53[1]	1	14[3]	Over current block	form4s003	SPTAVRIocb
54[1]	1	7[2]	Under voltage block	form4s003	SPTAVRiuvb
55[1]	1	15[3]	Reversed action blocking	form4s003	SPTAVRirab
56[1]	1	9[2]	Low voltage tap position	form4s003	SPTAVRiltp
57[1]	1	10[2]	High voltage tap position	form4s003	SPTAVRihtp
58[1]	1	4[3]	High voltage	form4s003	SPTAVRihvl
59[1]	1	3[3]	Low voltage	form4s003	SPTAVRilvl
60[1]	3	15[2]	Transformer disconnection	form4s002	SPTAVRidis
65[1]	11	[5]	Operation, Voltage control	form4s004	SPTAVRiope
66[1]	11	[5]	Operation, Reversed action	form4s004	SPTAVRiora
67[1]	11	[5]	Operation, Line volt drop comp	form4s004	SPTAVRildc
68[1]	9	[5]	Fast step down function mode	form4s008	SPTAVRifsd
69[1]	9	[5]	Setpoint voltage deadband	FORM4S008	SPTAVRmvol
70[1]	9	[5]	High voltage	FORM4S008	SPTAVRmVOL
71[1]	9	[5]	Low voltage	FORM4S008	SPTAVRmVOL
72[1]	9	[5]	Circulating current	FORM4S008	SPTAVRmcur
73[1]	9	[5]	Circulating current block limit	FORM4S008	SPTAVRmcur
74[1]	9	[5]	Transformer identity in the parallel group	FORM4S008	SPTAVRimst

Table 21: Process Objects for HV/Voltage Control

IX	Type	OB	Description (OX)	Format picture	RX (10 last characters)
210[1]	6		Tap command	form4s013	SPTAVRccmd
240	8		Events	form4s002	SPTAVREVE
241	8		Alarms	form4s002	SPTAVRALA
242	8		Printout	form4s002	SPTAVRxPRI
243	10		Function occ. by other monitor	-	sptavrxmisc
244	8		Rem. events and ind.	form4s002	SPTAVRxREM
245	8		Update	form4s002	SPTAVRxALA
249	2		Transformer routing prim. info	FORM4S002	SPTAVRxTRR
253	2		Transformer fict. pos. ind.	FORM4S002	SPTAVRxTRF
255	10		Transformer predefined color	FORM4S002	SPTAVRxTRC

1. Must be set to switch state AUTO (SS=2) before commissioning
2. The signals are connected to event block 11
3. The signals are connected to event block 12
4. The signals are connected to event block 10
5. The signals are direct connected to analog input

5 Object list

This section gives a description of all the MicroSCADA objects (command procedures, event channels, datalog objects etc.) which are created and used by the HV/Voltage Control package after installation of the package. The below is thus created in addition to the files included in the package - See “Complete file listing” on page 57.

5.1 Command procedures

The following command procedures are created and used.

Table 22:

Command procedure	Description
SPU_UPDATE	Fetch values from REC after Update deblock

5.2 Datalog objects

The following datalog objects are created and used.

Table 23:

Datalog object	Description
A_HTIMEOUT	Dialogue timeout

5.3 Scale objects

The following scale objects are created and used.

Table 24:

Scale object	Description
1_1	Standard scale - created only if it does not exist previously

6 Format pictures and status texts

The following format pictures are included and used by HV/Voltage Control:

Table 25:

Format picture	Value	Status text
form4s002	1	Blocked
	0	Deblocked
form4s003	1	Alarm
	0	Normal
form4s004	1	On
	0	Off
form4s008	>=HI	High alarm H2
	>=HW & <HI	High warning H1
	>LW & <HW	Normal value
	>=LW & <LI	Low warning L1
	>=LI	Low alarm L2
form4s013	1	Set Manual
	2	Set Auto
	4	Raise tap position
	8	Lower tap position
	16	Set Remote

Table 25:

Format picture	Value	Status text
	32	Set Station
	64	-
	128	-
	256	Total blocking on
	512	Auto mode blocking on
	1024	Total blocking off
	2048	Auto mode blocking off
	4096	Activation of factor 1
	8192	Activation of factor 2
	16384	Activation of factor 3
	32768	Activation of factor 4

7 Updated files

In this section the updates made to dedicated files during installation is described.

7.1 PATH4_S1.TXT

During startup after installation the file the contents of the file `path4_s1.txt` is added to the file `[drive]:\sc\lib4\base\bbone\use\path4.txt`. The contents of `path4_s1.txt` is according to following:

```
;Path definitions for hvvoltctrl functions
#PATH S_INST +NO_CREATE, /LIB4/SMOD/HVPROCESS/INST
#PATH S_USE +NO_CREATE, /LIB4/SMOD/HVPROCESS/USE
#PATH S_LANG +NO_CREATE, /LIB4/SMOD/HVPROCESS/LANG’L’
#REP_LIB S_REPR +S_USE/SR_LIBFGH
#REP_LIB SLIB +S_USE/SLIB
```

7.2 INDEX4_S3.TXT

During startup after installation the file the contents of the file `index4_s3.txt` is added to the file `[drive]:\sc\lib4\base\bbone\inst\mlib_index.txt`. The contents of `index4_s3.txt` is according to following:

```
;INDEX_S3.TXT
;this file holds data for the LIB520 installation tool
/LIB4/LIB520/HVPROCESS/VOLTAGE CTRL/LARGE 3*3
   @SFNAME="S_INST/SPI_TRANSB"
   @CONF_FILE="S_INST/SPI_TRANS.DAT"
/LIB4/LIB520/HVPROCESS/VOLTAGE CTRL/MEASUREMENT
   @SFNAME="S_INST/SPI_TRANSX"
   @CONF_FILE="S_INST/SPI_TRANSX.DAT"
```

Program:

This card registers your program and makes you eligible to receive information about future updates.

Name:

Title:

Company: | Dept.

Address:

City: | State: | Zip:

Phone:

Fax:

Remove from binder

Program supplied by:

Adress:

City: | State: | Zip:

Phone:

Date of receival of the program:

Program serial Nr:

Fascimile:

Please send this registration card to ABB Automation Products AB, Sweden department PS
(+46 21 32 17 36)

Place postage stamp here

ABB Automation Products AB
Substation Automation Division
Department PS
S-721 59 Västerås
Sweden

To be folded

Remove from binder

Tape here

Product:

ABB Automation Products AB would appreciate your comments on this product. Please grade the following questions by selecting one alternative per category. Your answer will enables us to improve our products.

How do you grade the quality of the product?

	Excellent				Poor
Total impression	☐	☐	☐	☐	☐
Useability	☐	☐	☐	☐	☐
Functionality	☐	☐	☐	☐	☐
Human machine interface	☐	☐	☐	☐	☐

Comments: _____

_____

_____

Remove from binder

How do you grade the quality of the documentation?

	Exellent				Poor
Total impression	☐	☐	☐	☐	☐
Layout	☐	☐	☐	☐	☐
Illustrations	☐	☐	☐	☐	☐
Readability	☐	☐	☐	☐	☐
Easy to find	☐	☐	☐	☐	☐
Content structure	☐	☐	☐	☐	☐

Comments: _____

_____

_____

Suggestions for improvments:

Remove from binder

Please send this report to:

ABB Automation Products AB
Substation Automation Division
Dept. TMD4
S-721 59 Västerås
Sweden

By facsimile:

Send to + 46 21 32 16 33

ABB Automation Products AB

License Agreement

IMPORTANT – READ CAREFULLY BEFORE OPENING

This legal document is an agreement between You, the user, and ABB Automation Products AB, Västerås, SWEDEN. By opening the diskette package You indicate your acceptance of the terms and conditions of this agreement. If You do not agree to the terms of this agreement, promptly return the unopened diskette package and other items which are part of the product for a full refund. Your product is a single user version unless you have a written agreement with ABB Automation Products AB.

SOFTWARE LICENSE

1. Grant of License

- This ABB Automation Products AB License Agreement (”License”) grants you the nonexclusive right to use one copy of the enclosed software program (”SOFTWARE”) on a single computer (i.e., with a single CPU) at a single location at any time. If you have multiple Licenses for the SOFTWARE you may have as many copies of the SOFTWARE in use as you have Licenses.

2. Copyright

- The software is owned by ABB Automation Products AB or its suppliers and is protected by Swedish copyright laws, international treaty provisions, and all other applicable national laws. Therefore you must treat the SOFTWARE as any other copyrighted material (e.g., a book or musical recording) except that if the software is not copy protected you may either (a) make a copy of the SOFTWARE solely for backup or archival purposes, or (b) transfer the SOFTWARE to a single hard disk provided you keep the original solely for backup or archival purposes. You may not copy the Documentation accompanying the SOFTWARE.

3. Term

- The License is effective until terminated. This License will terminate automatically without notice from ABB Automation Products AB if you fail to comply with any provision of this License. Upon termination you shall return the diskettes containing the SOFTWARE and all Documentation to ABB Automation Products AB and destroy any copies of the SOFTWARE or any portions of it which has not been returned to ABB Automation Products AB, including copies resident in computer memory.

4. Other Restrictions

- You may not rent, lease, lend, sell or give away the SOFTWARE, but you may transfer your rights under this ABB Automation Products AB License Agreement on a permanent basis provided you transfer all copies of the SOFTWARE and all written materials, and the recipient agrees to the terms of this Agreement. You may not modify, adapt, translate, reverse engineer, decompile, disassemble, or create derivative works based on the SOFTWARE. You may not modify, adapt, translate or create derivative works based on the written materials.

LIMITED WARRANTY

Limited Warranty

- ABB Automation Products AB warrants that the software will perform substantially in accordance with the accompanying Product Manual(s) for a period of 1 year from the date of delivery from ABB Automation Products AB, Västerås. ABB Automation Products AB does not warrant that the SOFTWARE is free from coding errors.

Customer Remedies

- ABB Automation Products AB’s entire liability and your exclusive remedy shall be, at ABB Automation Products AB’s option, either (a) return of the price paid or (b) repair or replacement of the SOFTWARE that does not meet ABB Automation Products AB’s Limited Warranty and which is returned to ABB Automation Products AB with a copy of your receipt. This Limited Warranty is void if failure of the SOFTWARE has resulted from accident, abuse, or misapplication. Any replacement SOFTWARE will be warranted for the remainder of the original warranty period or 30 days, whichever is longer.

No Other Warranties

- ABB Automation Products AB disclaims all other warranties, either express or implied, including but not limited to implied warranties of merchantability and fitness for a particular purpose, with respect to the SOFTWARE, accompanying Product Manual(s) and written materials. This warranty gives you specific legal rights.

No Liability for Consequential Damages

- Neither ABB Automation Products AB nor anyone else who has been involved in the creation, production or delivery of this product shall be liable for any direct, indirect, consequential or incidental damages (including damages for loss of business profits, business interruption, loss of business information, and the like) arising out of the use or inability to use such product even if ABB Automation Products AB has been advised of the possibility of such damages. In any case, ABB Automation Products AB’s entire liability under any provision of this agreement shall be limited to the amount actually paid by you for the software.

ACKNOWLEDGEMENT

By opening the diskette package you acknowledge that you have read this agreement, understand it, and agree to be bound by its terms and conditions. You also agree that it is the complete and exclusive statement of the agreement between the parties and supersedes all proposals or prior agreement, oral or written, and any other communications between the parties relating to the subject matter of the licence or limited warranty.

This Agreement is governed in all aspects by Swedish law. If any provisions of this Agreement are invalid or unenforceable, all others will remain in effect.

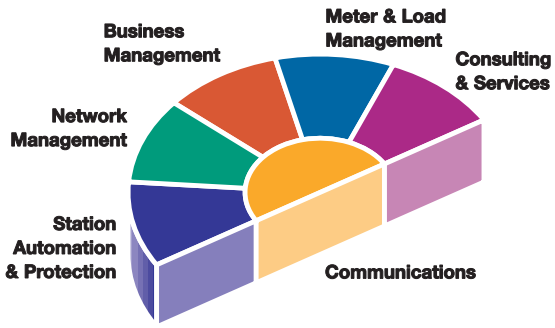

Panorama is the standard for a comprehensive range of integrated solutions for the efficient and reliable management of power networks. Using innovative information technology, Panorama delivers total control of the power process, from generation to consumption. The Panorama standard covers six application areas, each offering specific solutions.

DocID 1MRK 511 061-UEN*2.1-00

ABB Automation Products AB
Substation Automation Division
S-721 59 Västerås
Sweden
Tel: +46 21 342000
Fax: +46 21 146918

Printed on recycled and ecolabelled paper