MULTI-FUNCTION CURRENT PROTECTION

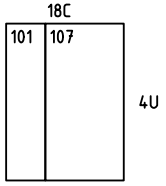

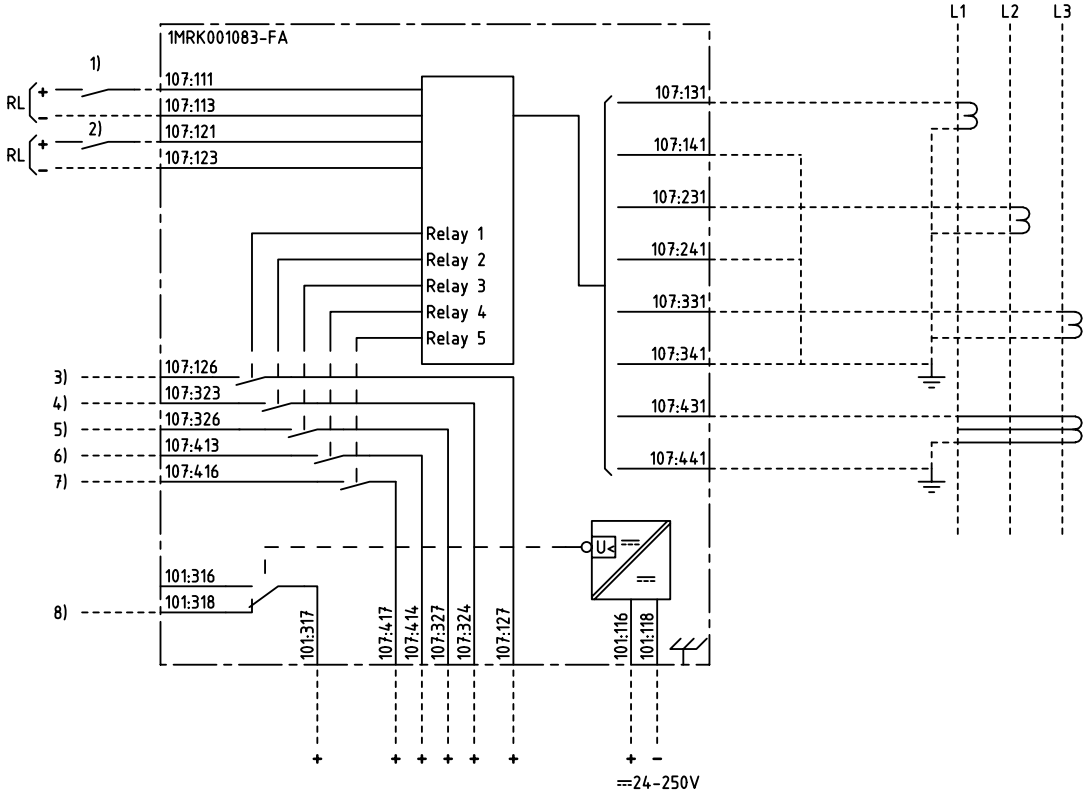

101 RXTUG 22H
107 RXHL 411

1), 2) BINARY INPUT, PROGRAMMABLE

3)-7) RELAY OUTPUTS 1-5, PROGRAMMABLE FUNCTION

8) LOSS OF AUXILIARY VOLTAGE

PROGRAMMABLE FUNCTIONS FOR BINARY INPUTS:
BLOCKING/ENABLING I>, I>>, I>>>, IN>, IN>>, IN>>>
THERMAL RESET θ, BREAKER FAILURE EXTERNAL START;
ALTERNATIVE SETTINGS; RESET OF LED INDICATIONS.

PROGRAMMABLE FUNCTIONS FOR BINARY OUTPUTS:
START AND TRIP I>, I>>, I>>>, IN>, IN>>, IN>>>;
THERMAL ALARM θ; THERMAL TRIP θ;
BREAKER FAILURE RE-TRIP; BREAKER FAILURE BACK-UP TRIP;
ALTERNATIVE SETTINGS; IN SERVICE

BINARY INPUT OPTIONS:
CIRCUIT-BREAKER CLOSED; CIRCUIT-BREAKER READY;
BLOCKING OF AUTORECLOSING; AUTORECLOSING EXTERNAL ON.

BINARY OUTPUT OPTIONS:
AUTORECLOSING ON; AUTORECLOSING READY;
AUTORECLOSING STARTED;
AUTORECLOSING PULSE TO CIRCUIT-BREAKER;
AUTORECLOSING UNSUCCESSFUL; INTENTIONAL OVERREACH TRIP.

We reserve all rigths in this document and in the information contained therein. Reproduction, use or disclosure to third parties without express authority is strictly forbidden.© ABB Automation Technologies AB

Customer drw no	Prep. PTUA/ TPTD	H Raza/JE	1999-09-27	Connection Diagram	Cont. sh/ No of sh
	Appr. PTUA/	Roger Karlsson	1999-09-27	Multi-f current prot.	
	Resp. dept PTUA/ TPTD				
Based on	ABB Automation Technologies			Documentnumber 1MRK001083-FAA	Lang. en / Rev. 1 / Sheet 1

Documentstatus: Approved