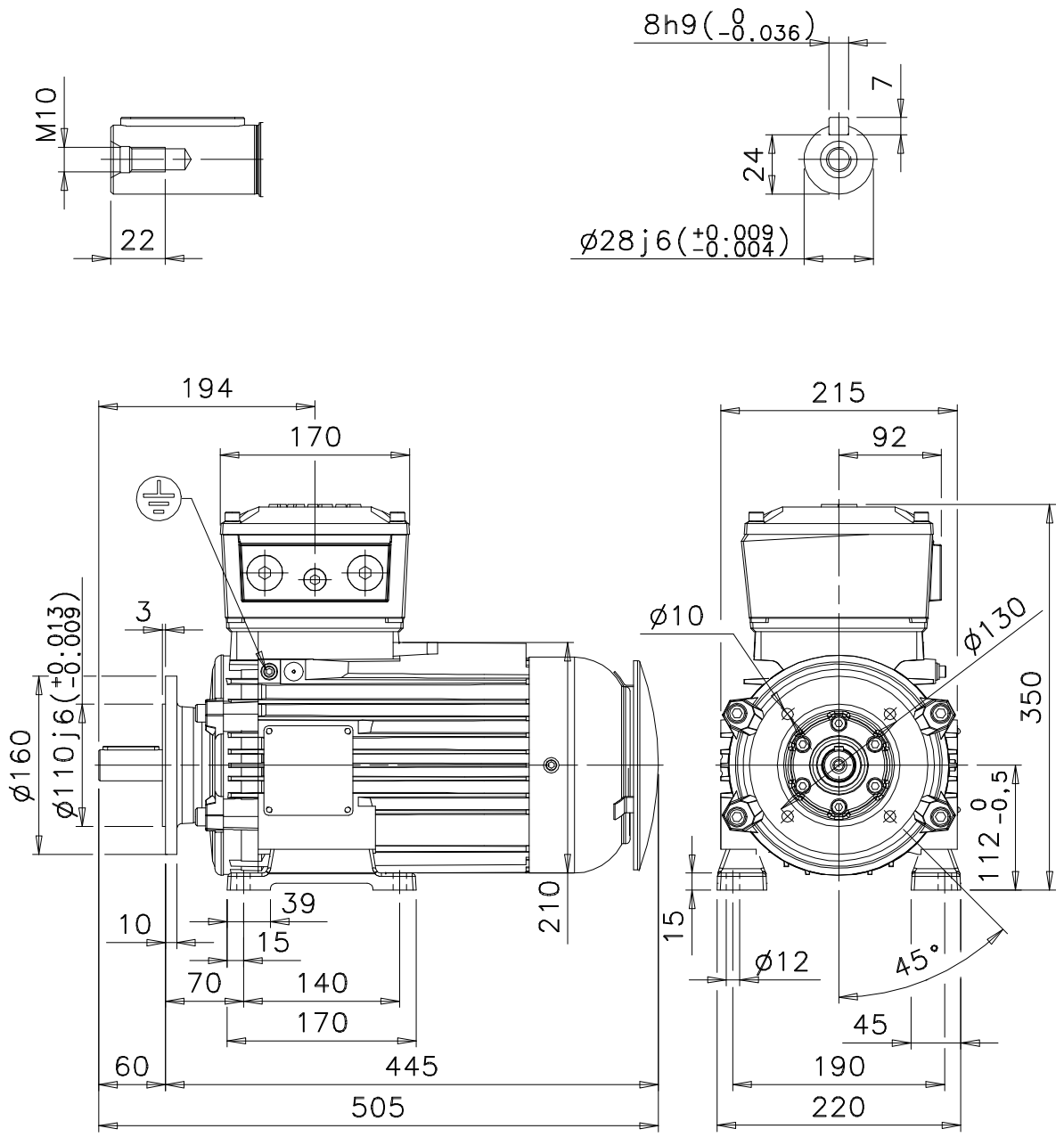

Additional information:

Dimension Print	Motor Type: M3JP 112M_2-8, V15, FF130	Document No: 3GZF500211-54 A 13 JP 112 A
Description: STANDARD SQUIRREL CAGE MOTOR		

Unit: ABB Oy, Motors and Generators		Issued by: R.Ketonen	Replaces:
Date: 01.02.2011		Approved by: P.Viitanen	Replaced by:
ABB Oy	Customer Reference:		ABB