Doc. N.° 2TSA451008P0000 - ECN000122590 - Rev. B

Emax2 Retrofill

Installation instruction manual of OEM door adaptor kits for replacement of AK/AKR/WP breakers with Emax2

AKD5-AK25			
	1A	1B	1C
QTY	1	1	16

AKD5-AK50			
	2A	2B	2C
QTY	1	1	10

AKD5-AKT50			
	3A	3B	3C
QTY	1	1	10

AKR/WP - B&F TYPE			
	4A	4B	4C
QTY	1	1	16

AKD8-AKR30S			
	5A	5B	5C
QTY	1	1	11

AKR/WP D TYPE				
	6A	6B	6C	6D
QTY	1	1	12	12

AKD6/AKR 75/100				
	6A	6B	6C	6D
QTY	1	1	12	12

AKD5-AK75/100			
	7A	7B	7C
QTY	1	1	10

AKD6-AK75/100			
	8A	8B	8C
QTY	1	1	12

DANGER

- Turn off all power to switchgear. Tagout and lockout main source, upstream or main breaker.
- Failure to comply with these instructions will result in death or serious injury from severe burns caused by arc flashing that has exceedingly high temperatures.
- Always wear personal protection equipment according to OSHA standards and appropriate to the severity of potential burns.
- Ensure only qualified personnel install, operate, service, and maintain all electrical equipment.

AKD5-AK25

1 AKD5-AK25

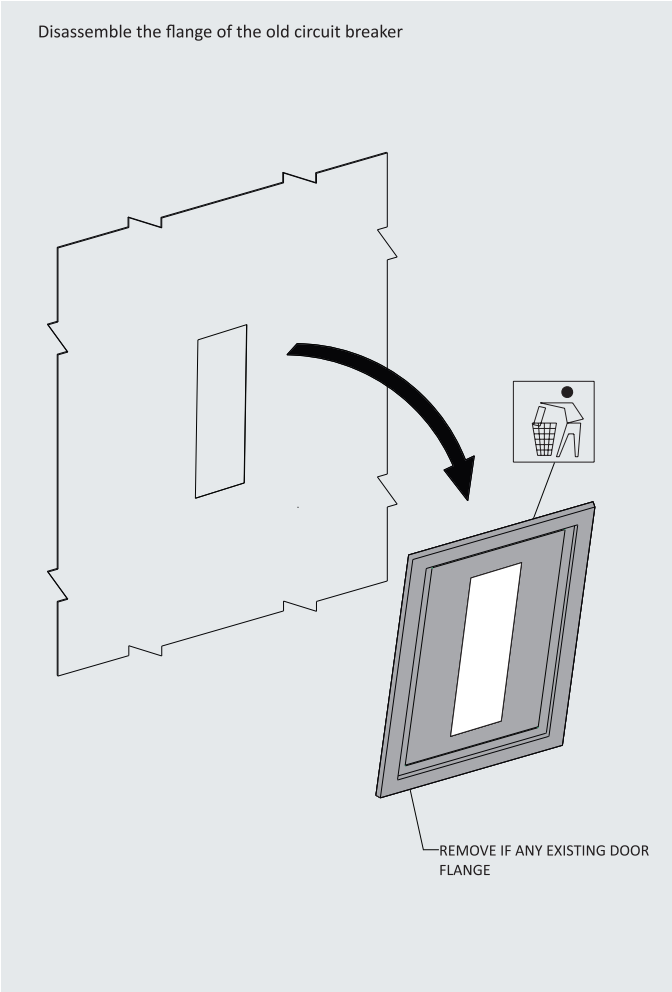

2 AKD5-AK25

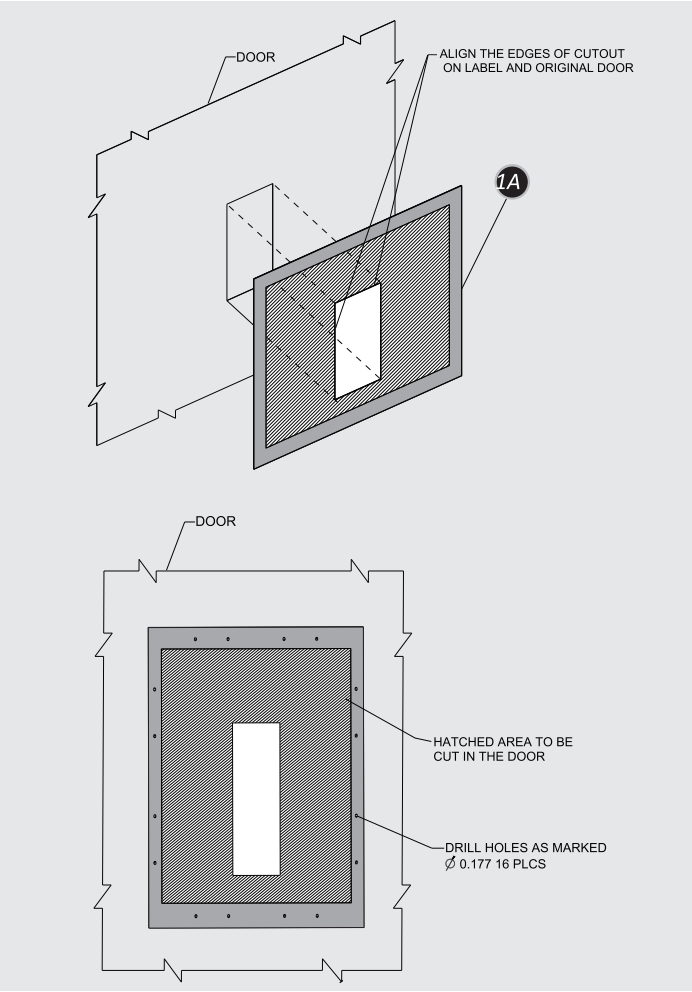

3 AKD5-AK25

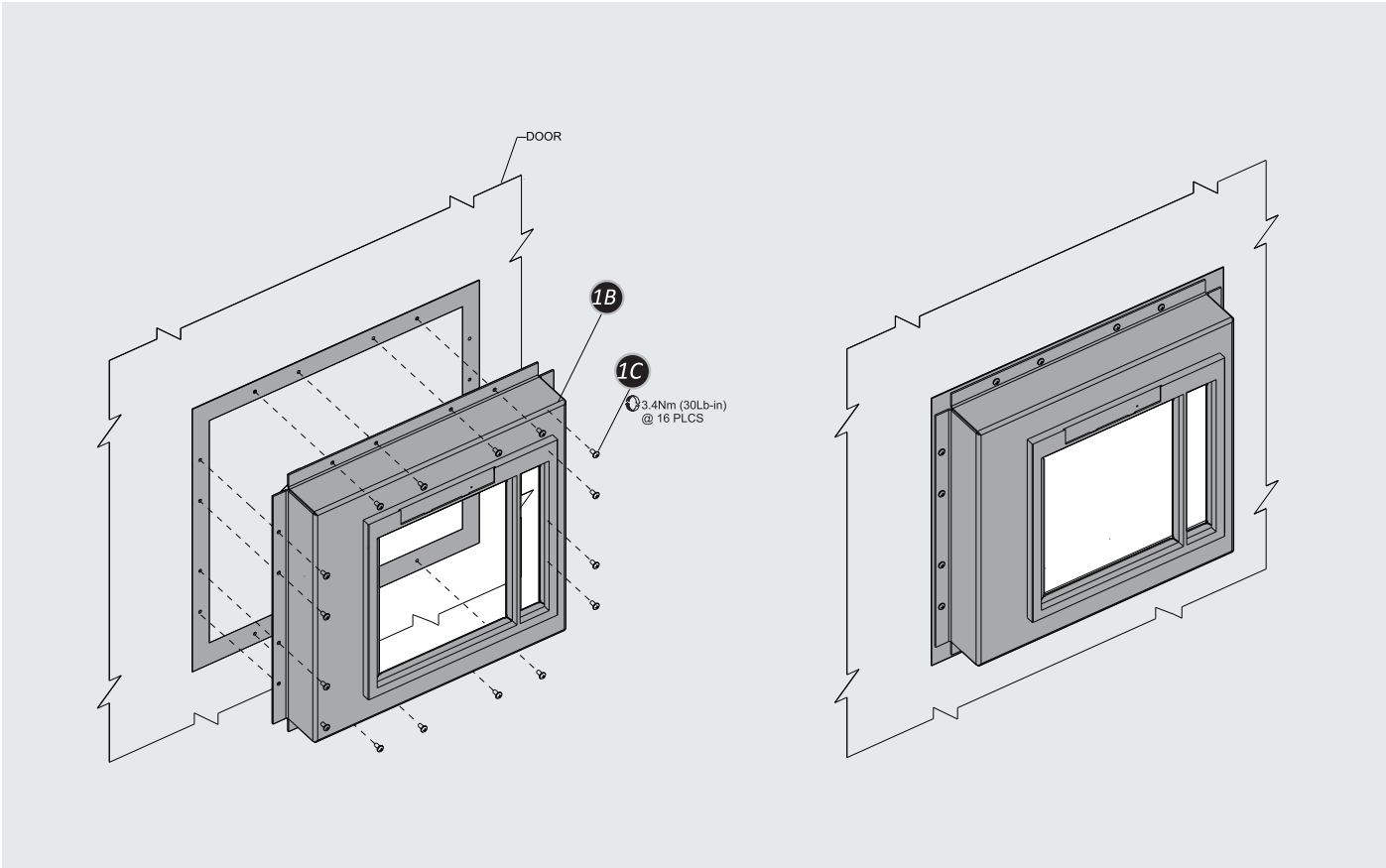

4 AKD5-AK50

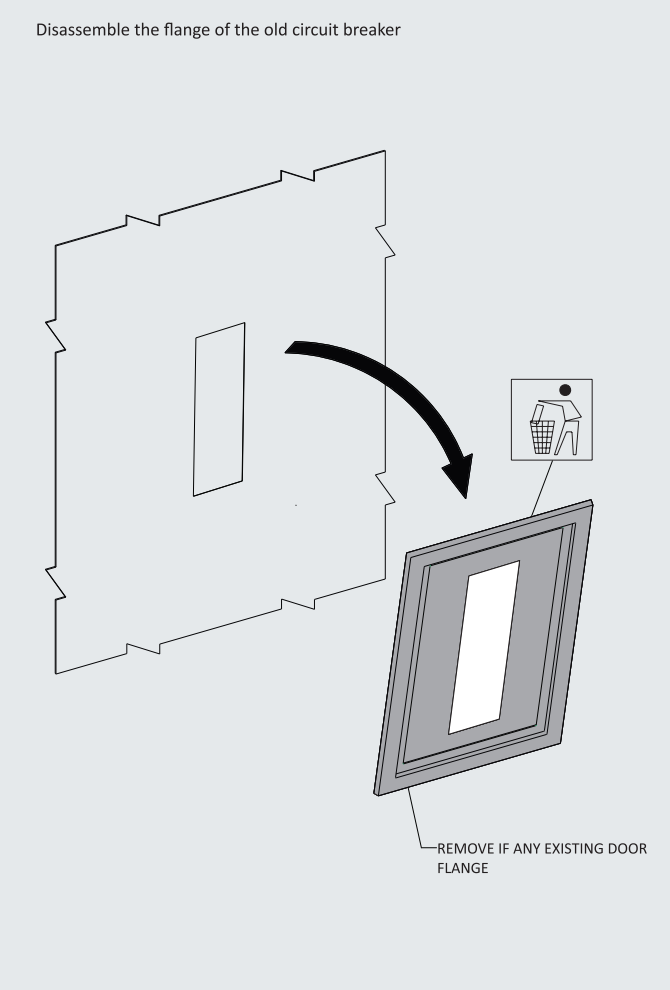

5 AKD5-AK50

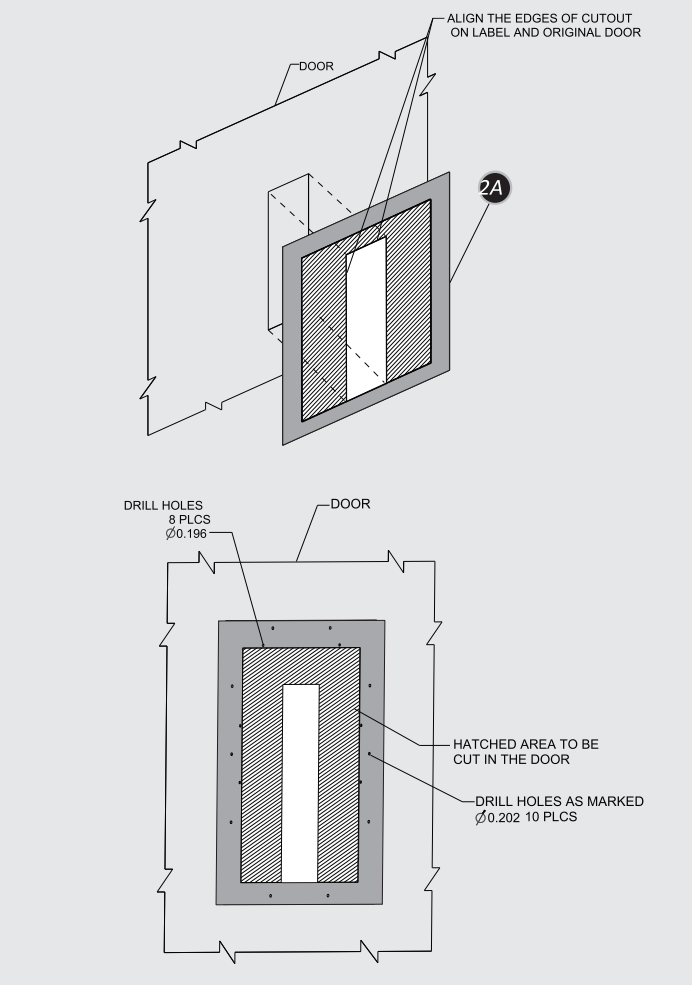

6 AKD5-AK50

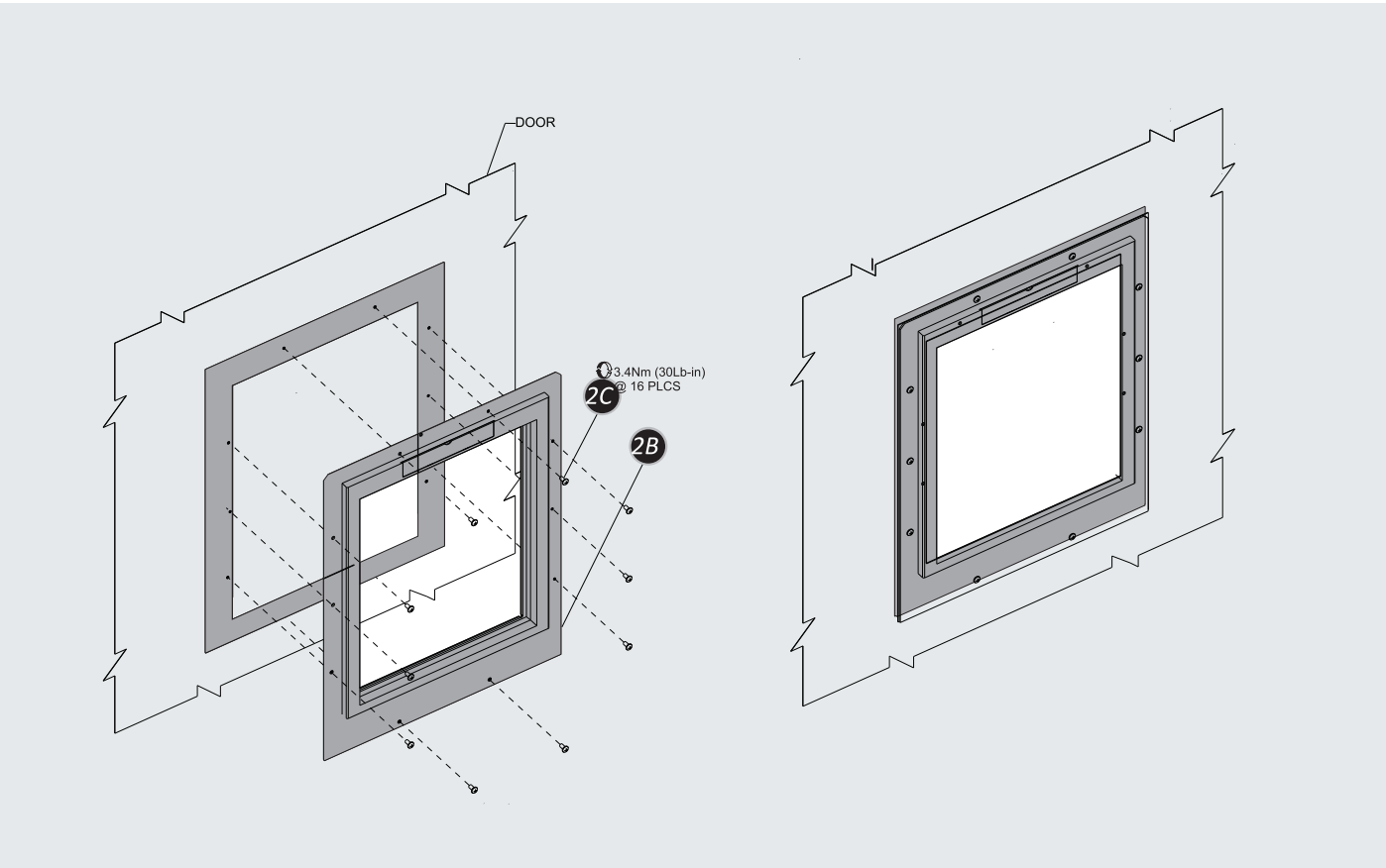

7 AKD5-AKT50

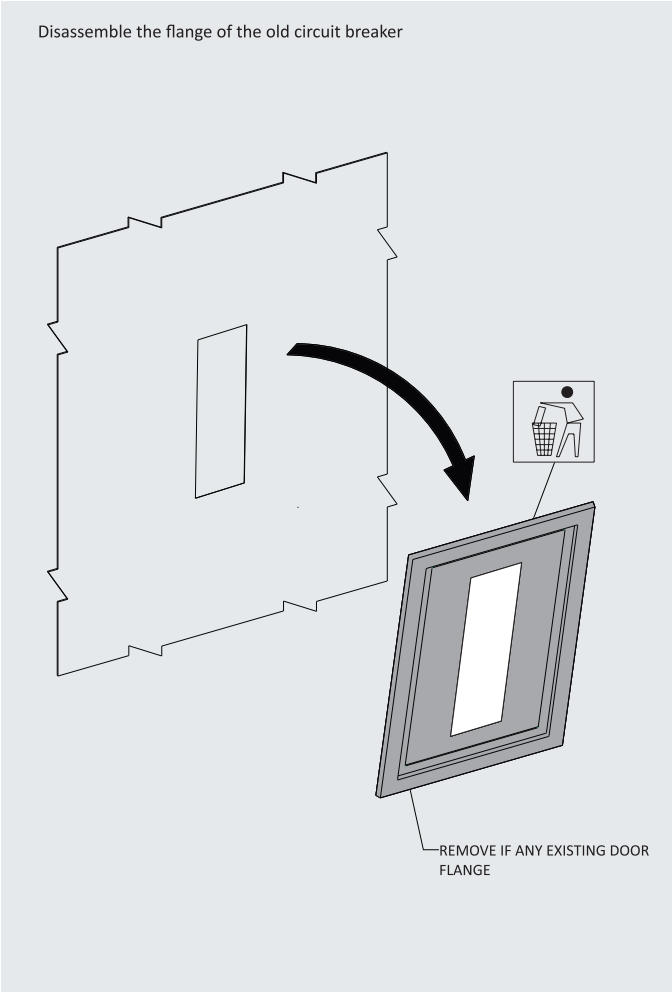

8 AKD5-AKT50

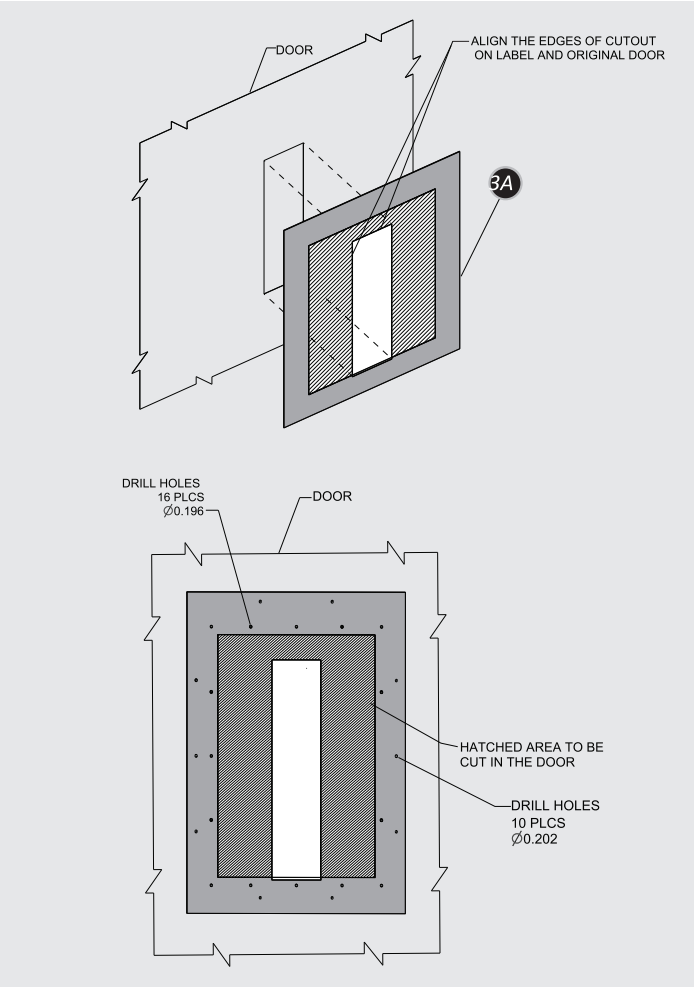

9 AKD5-AKT50

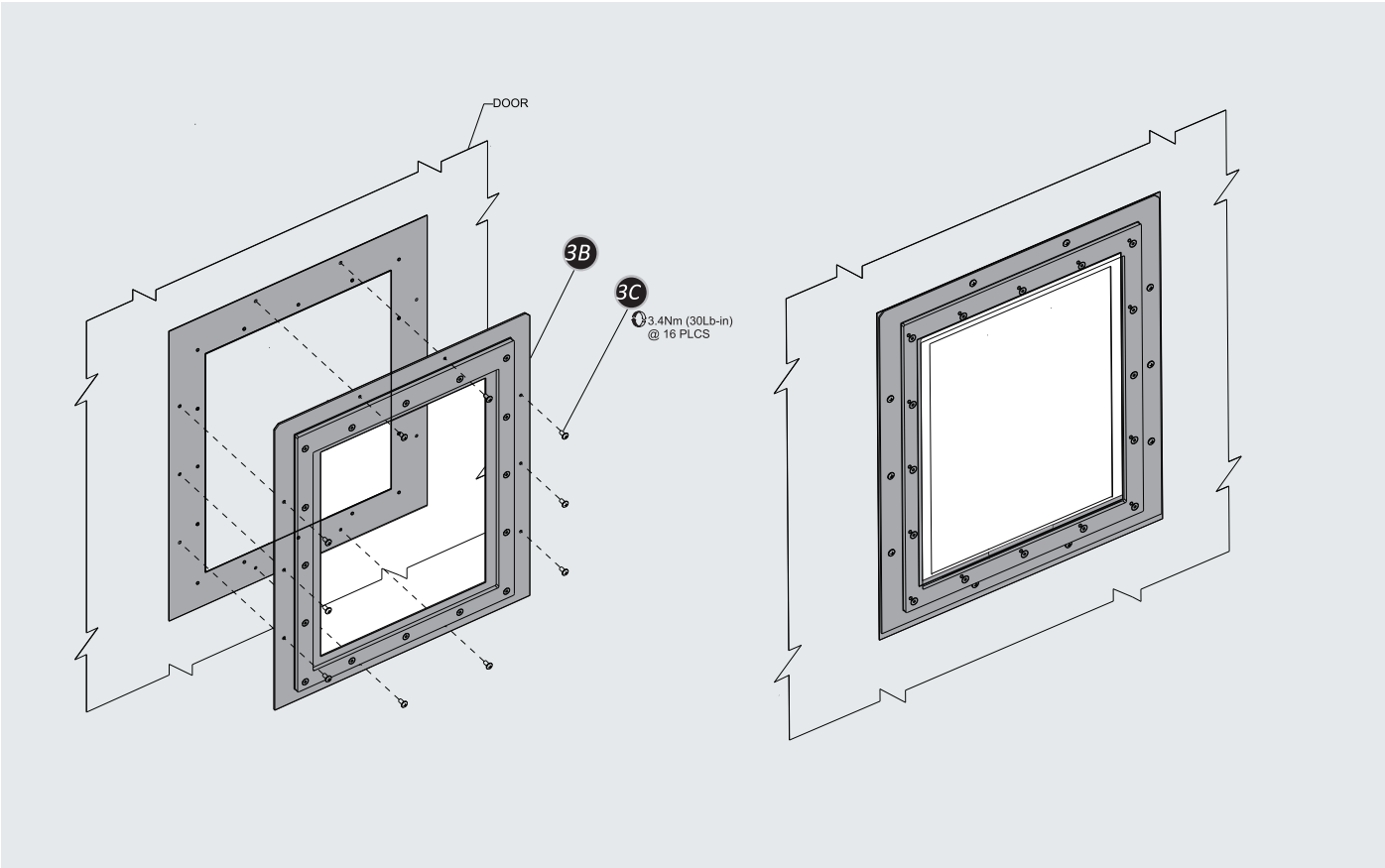

10

AKD5-AK75/100

Disassemble the flange of the old circuit breaker

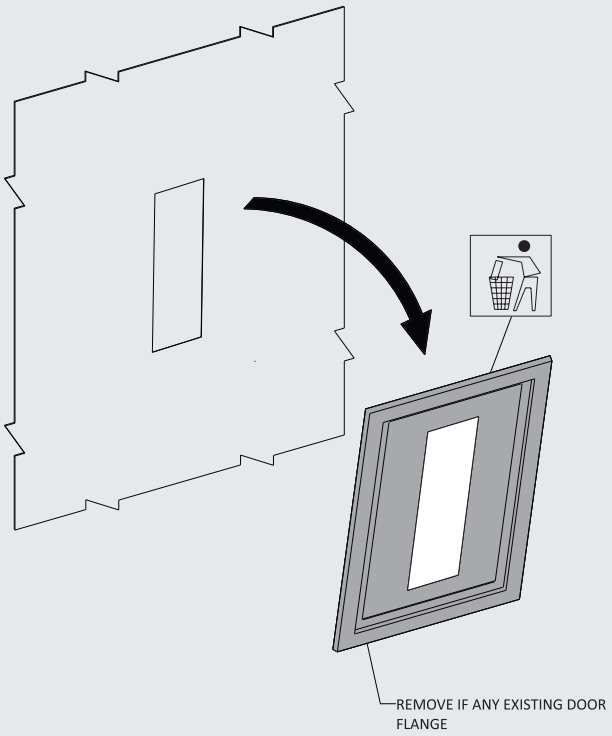

11

AKD5-AK75/100

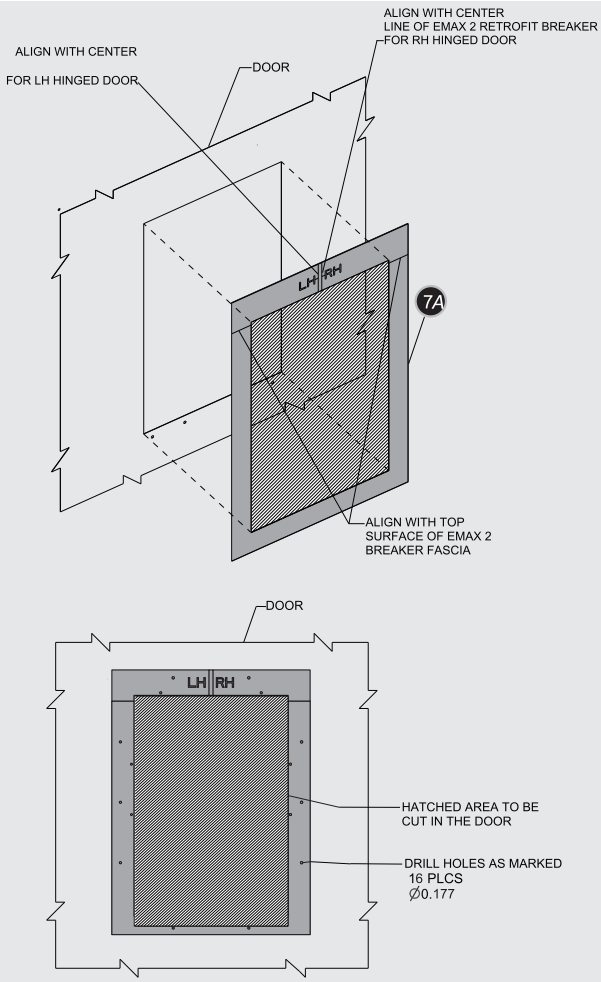

12

AKD5-AK75/100

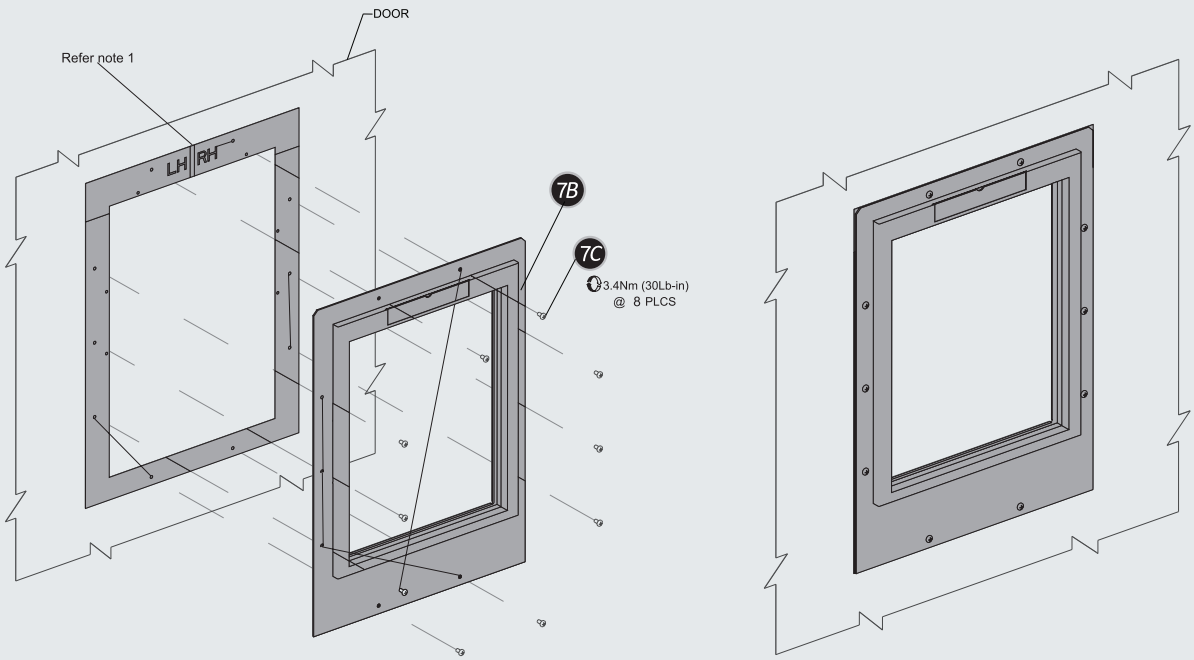

Note 1- After reworking the door cut out and the holes

13 AKD6-AKR 75/100

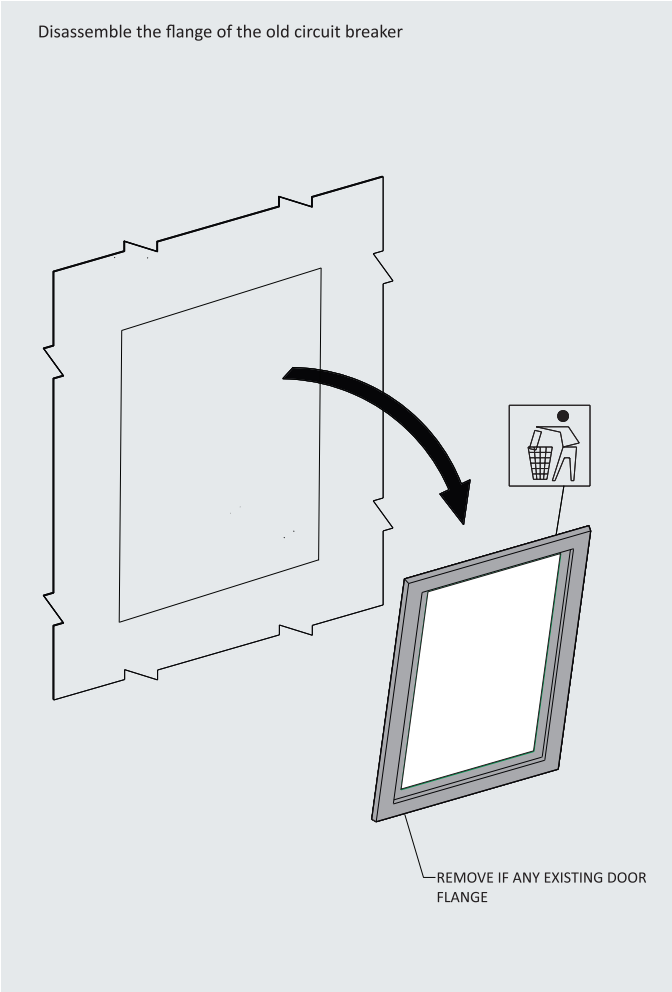

14 AKD6-AKR 75/100

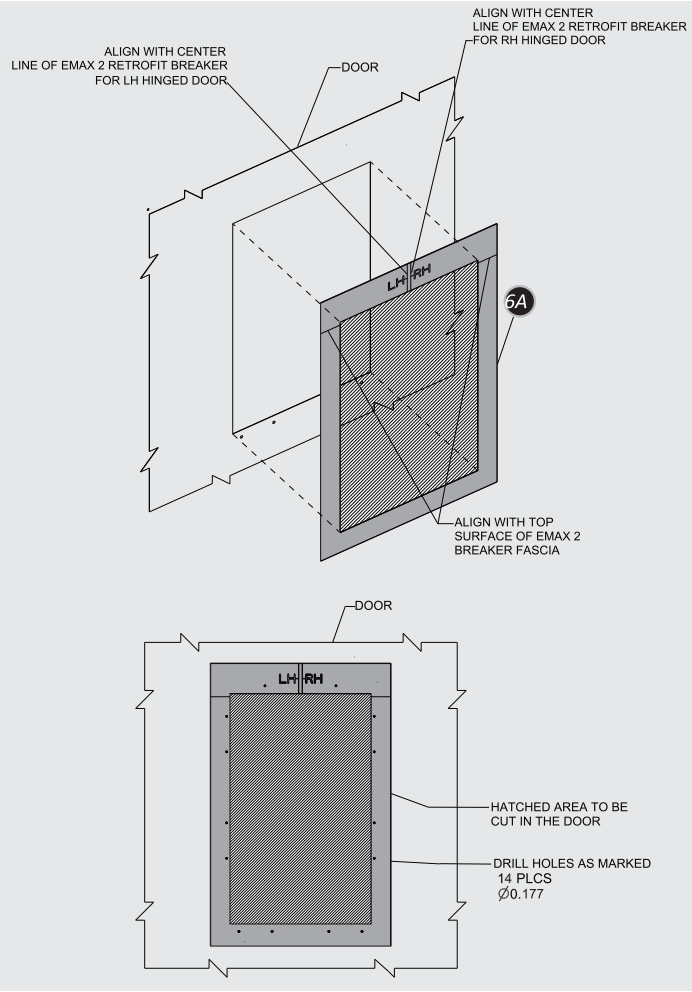

15 AKD6-AKR 75/100

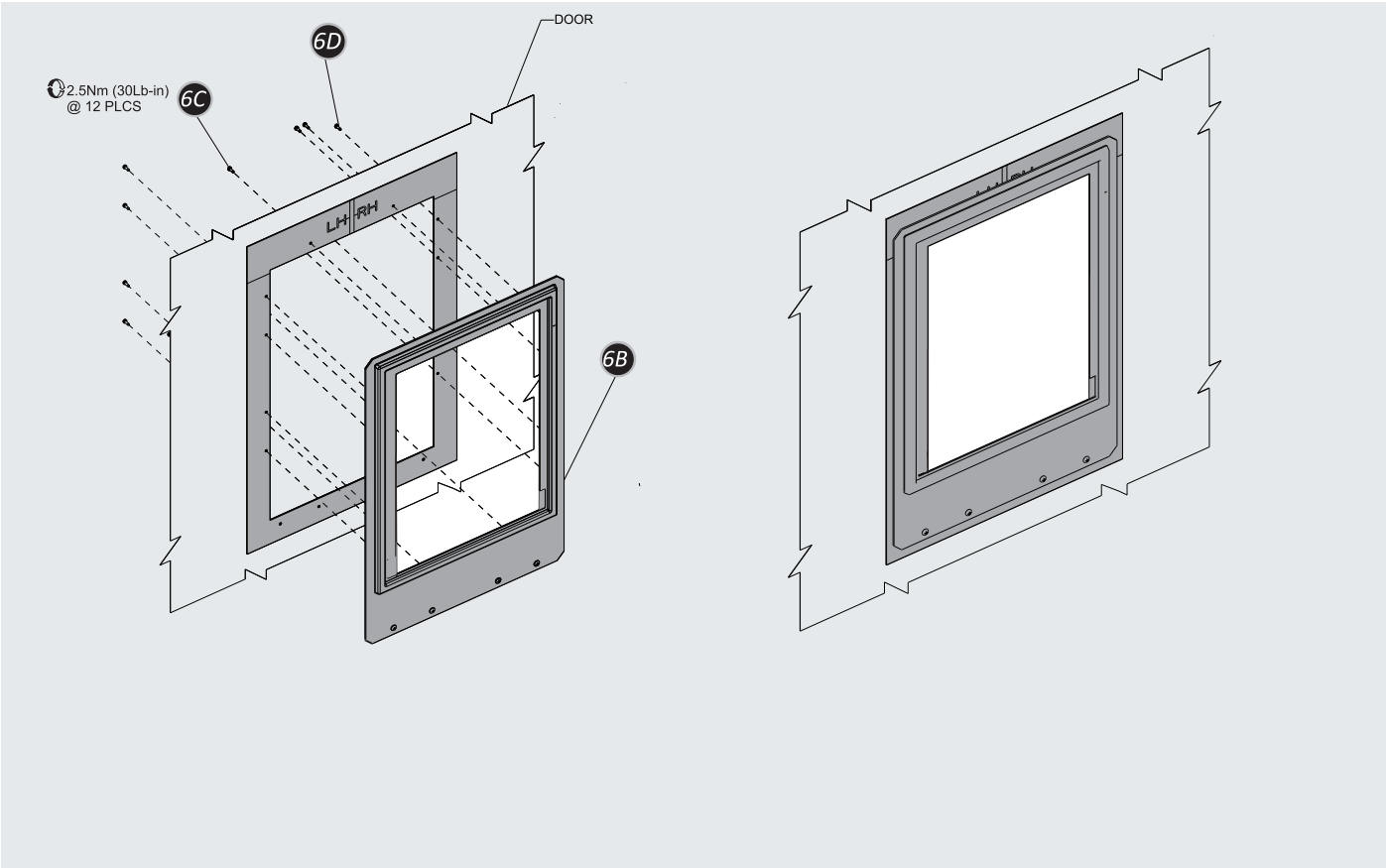

16 AKR/WP B&F TYPE

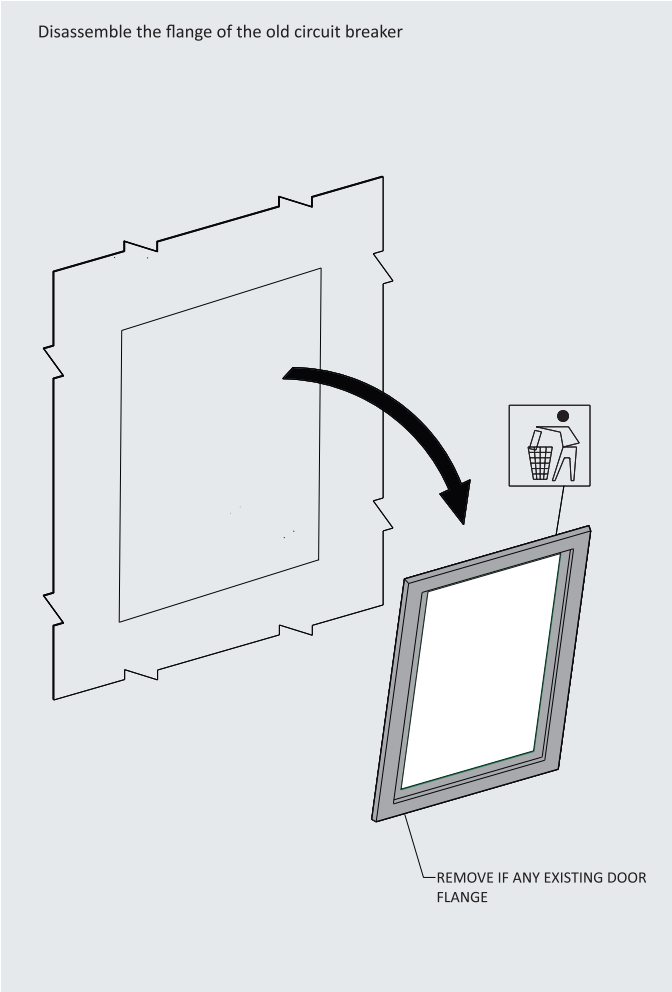

17 AKR/WP B&F TYPE

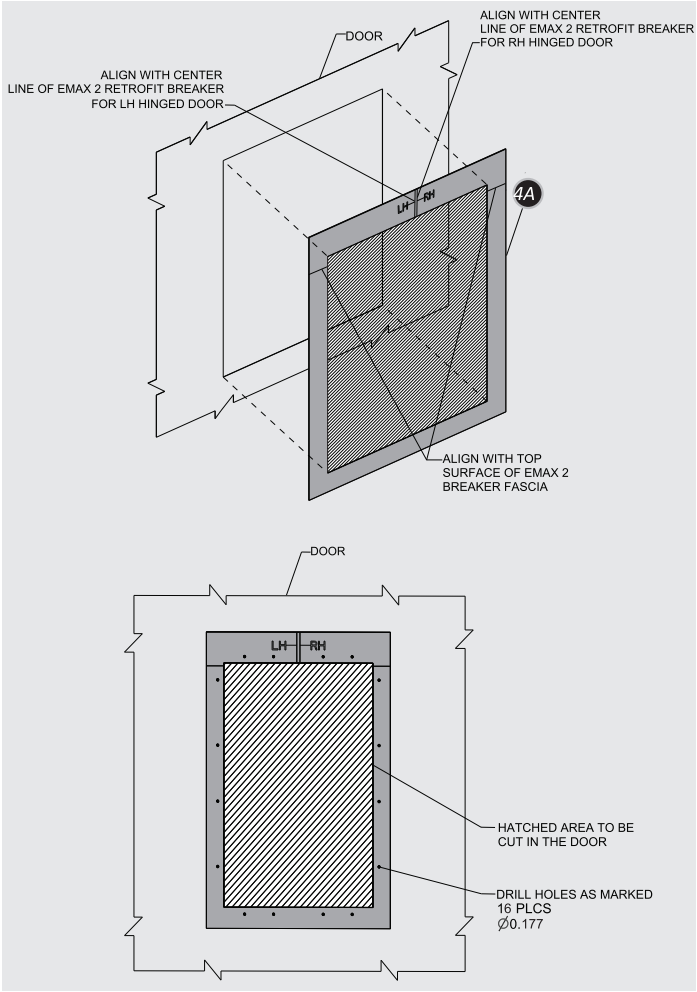

18 AKR/WP B&F TYPE

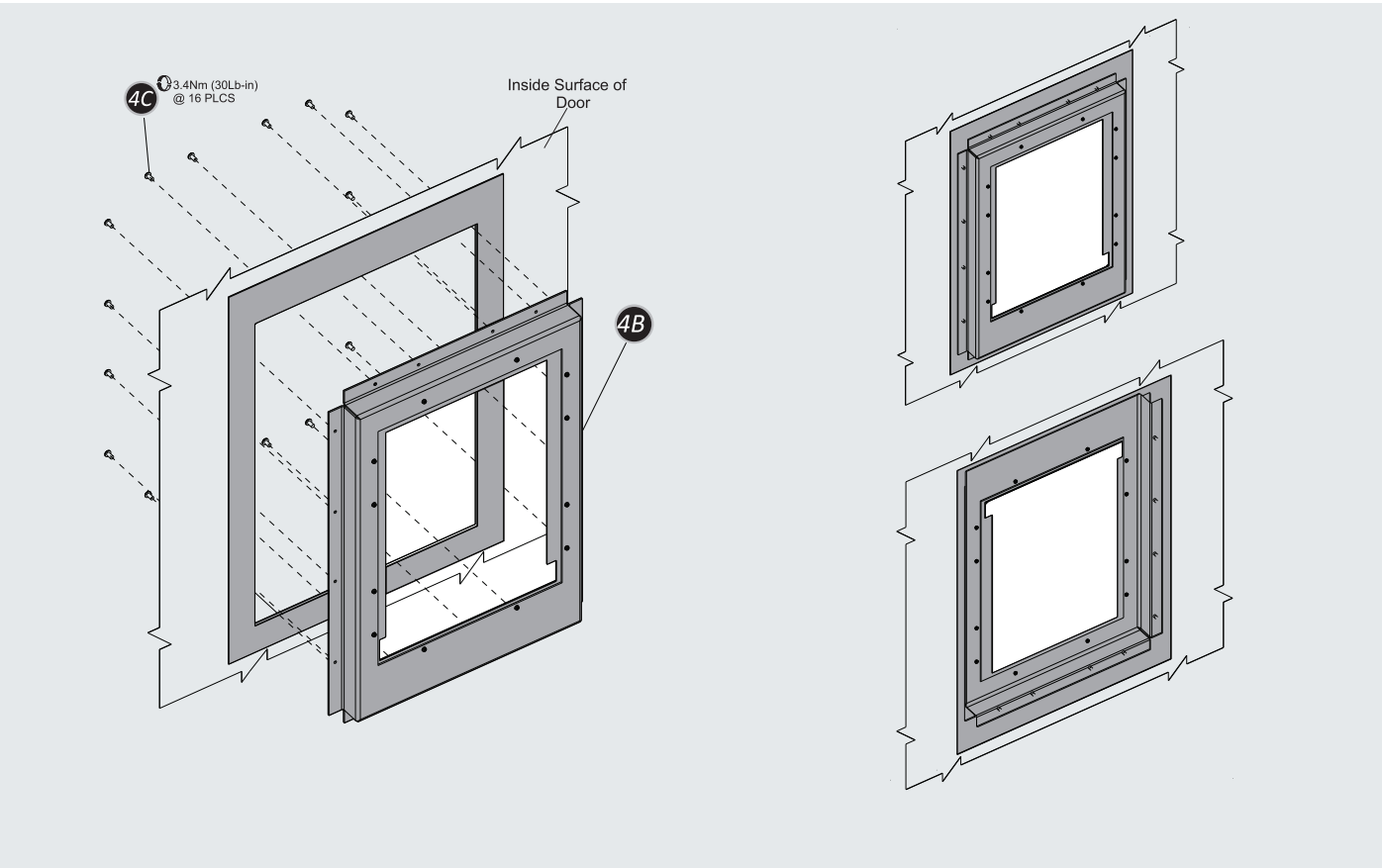

19

AKD6-AKR75/100

Disassemble the flange of the old circuit breaker

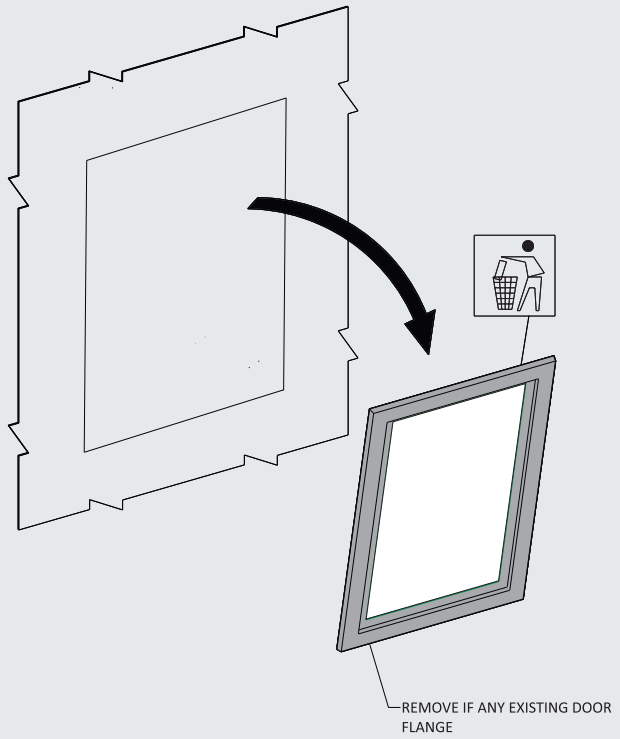

20

AKD6-AKR75/100

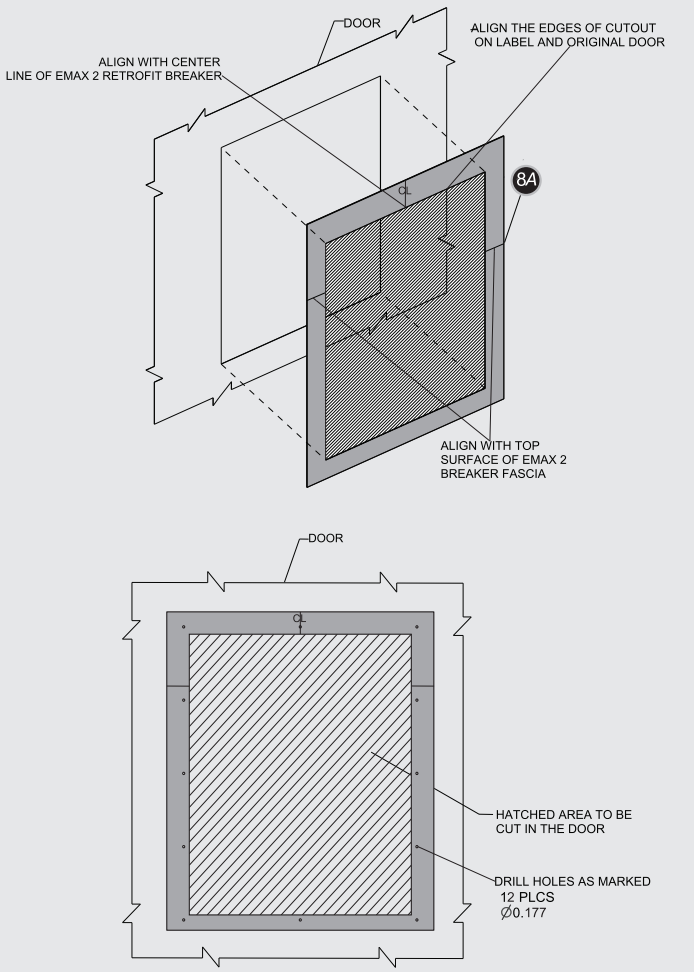

21

AKD6-AKR 75/100

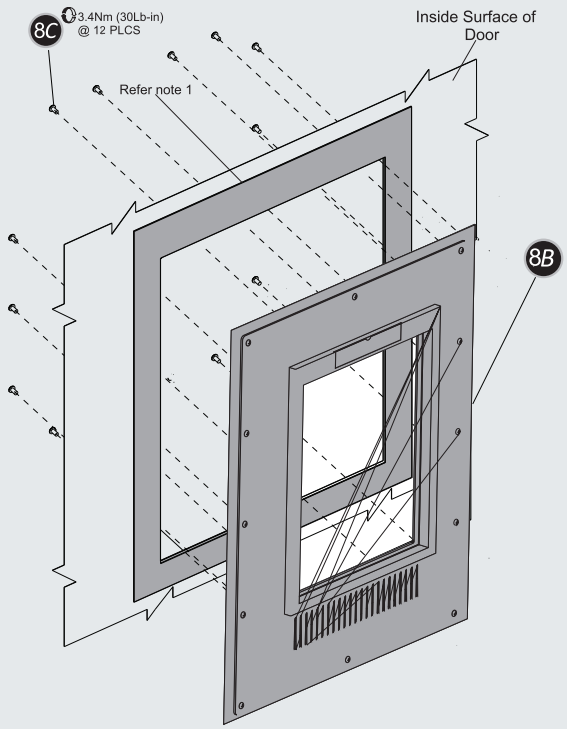

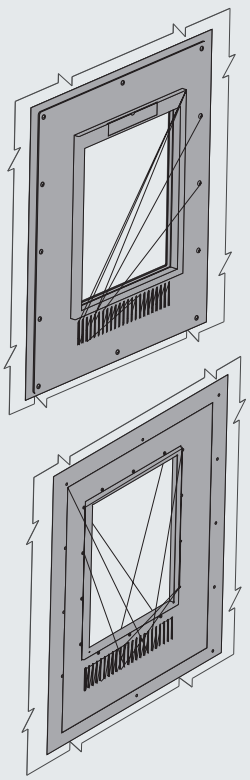

Note 1- After reworking the door cut out and the holes

22 AKD8-AKR30S

Disassemble the flange of the old circuit breaker

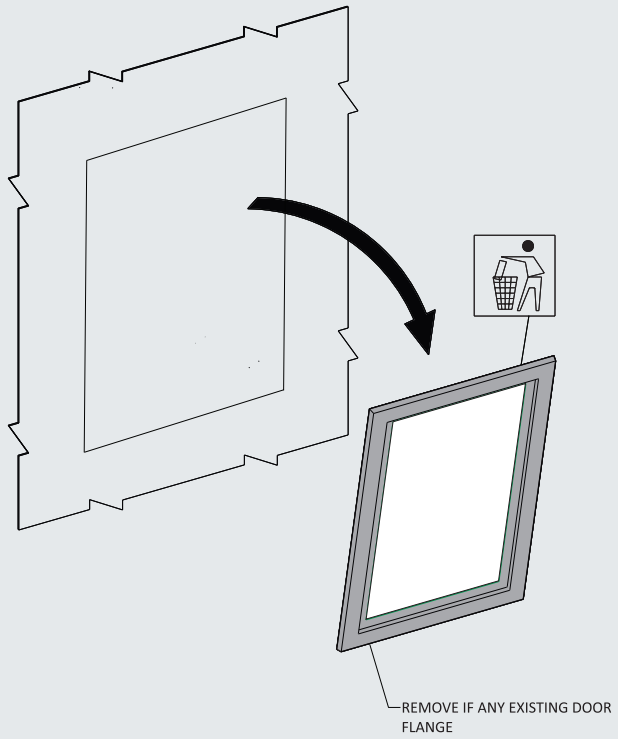

23 AKD8-AKR30S

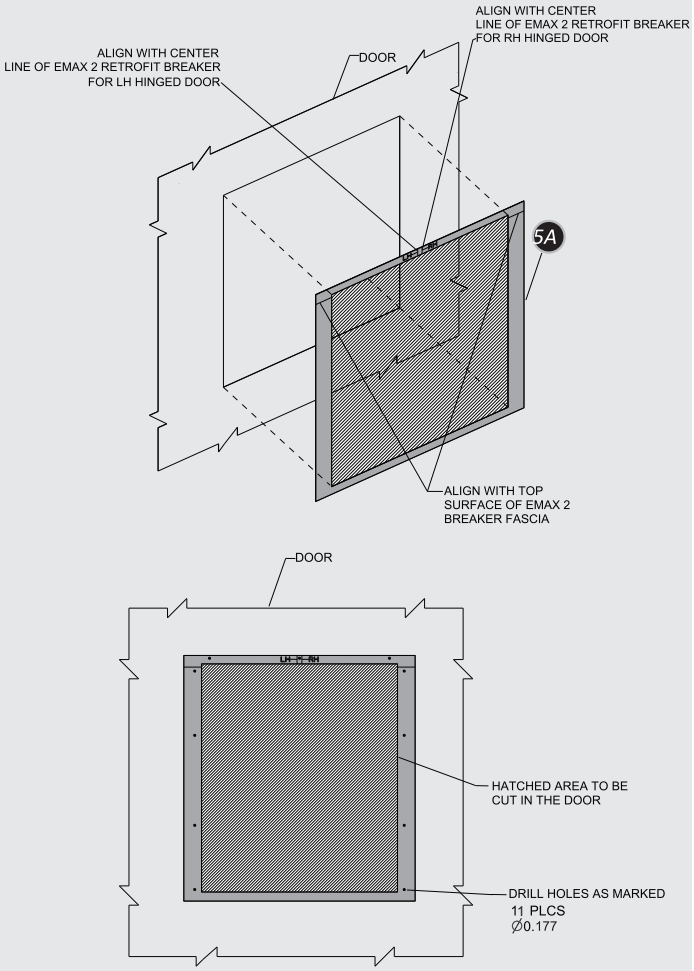

24 AKD8-AKR30S

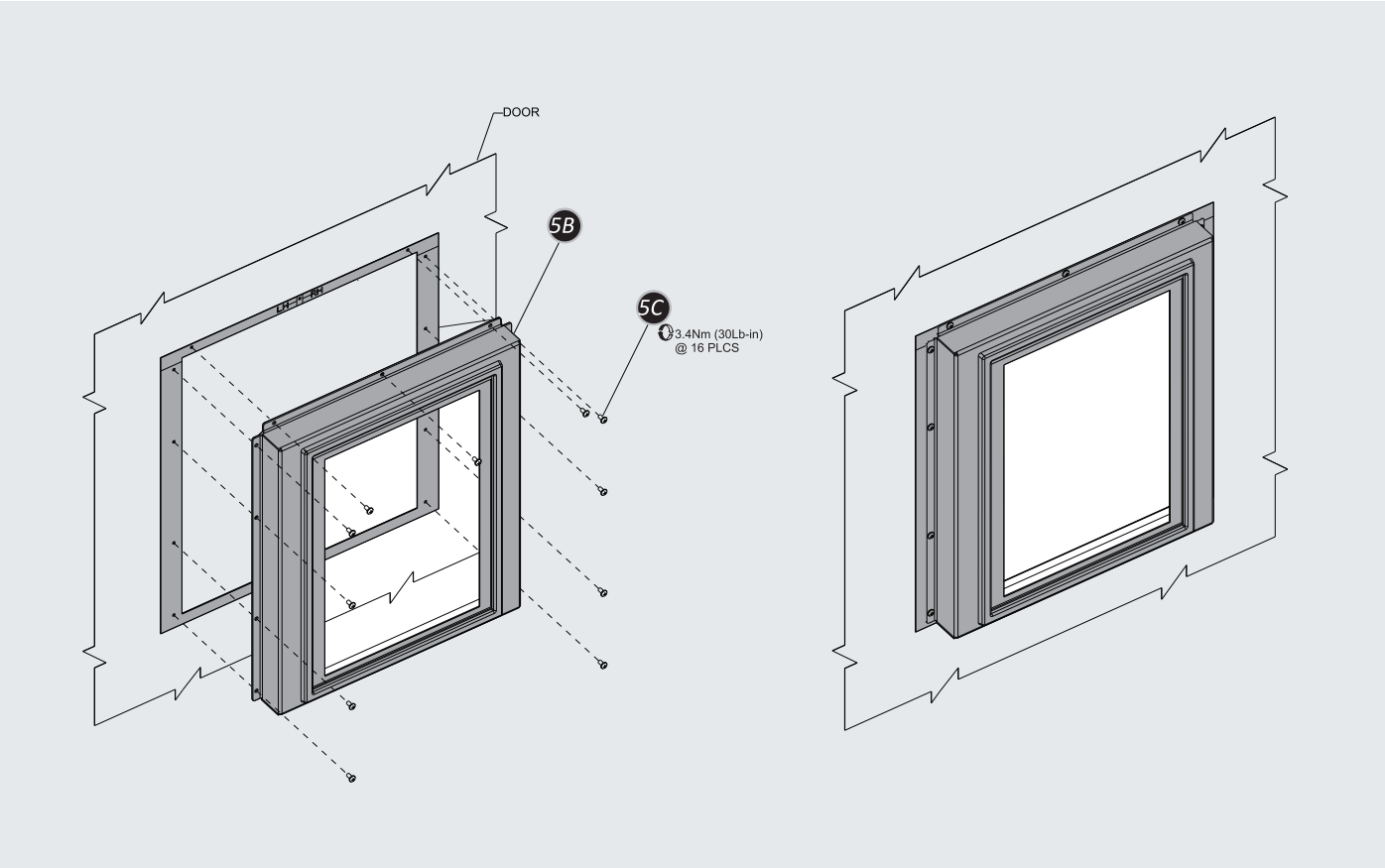

25 AKR/WP D TYPE

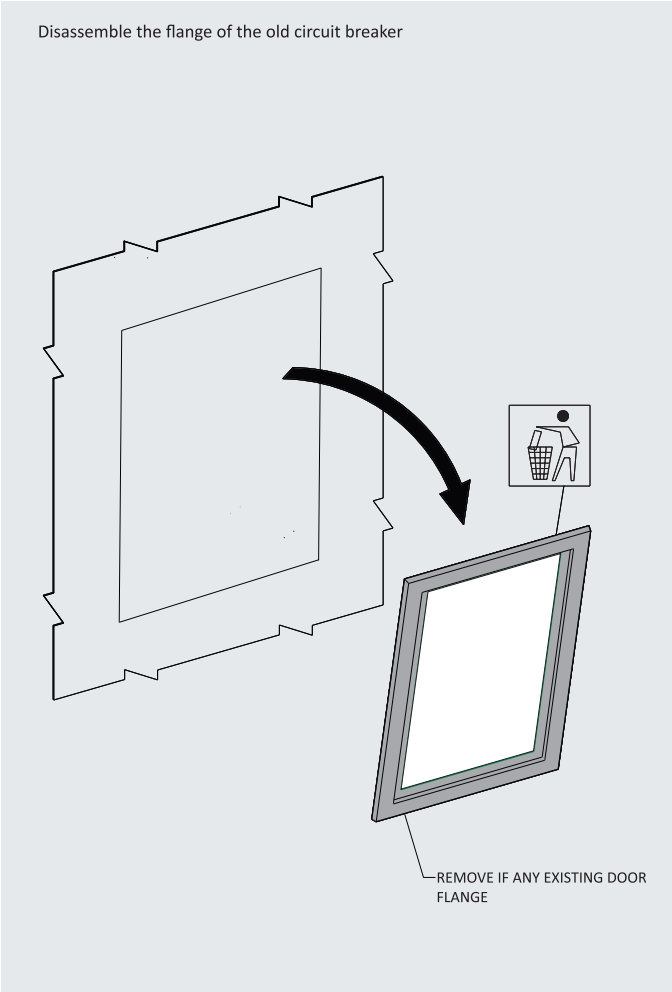

26 AKR/WP D TYPE

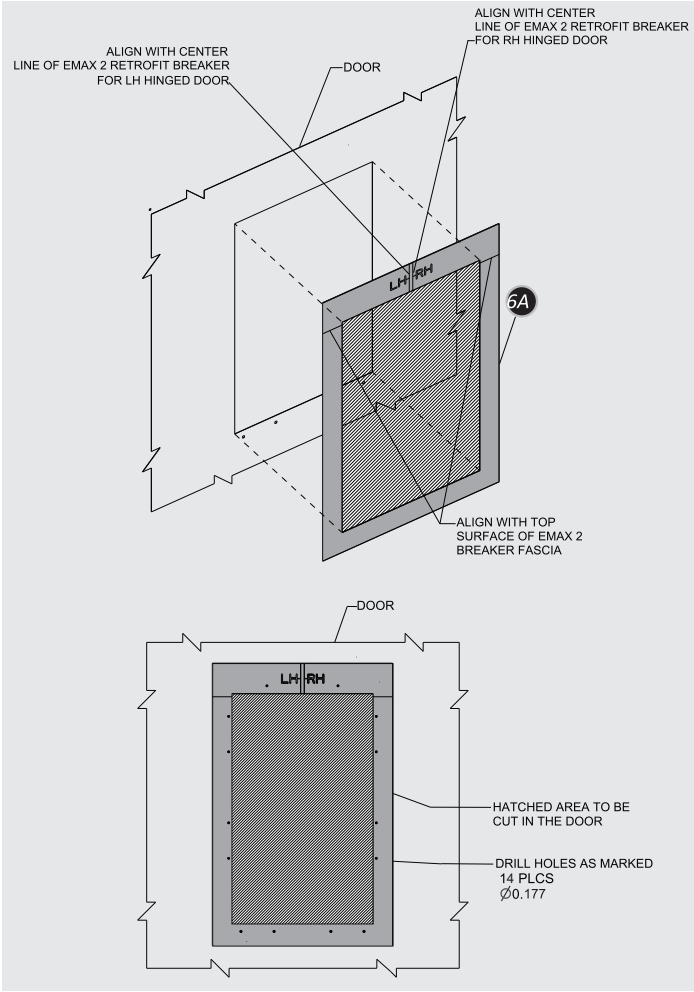

27 AKR/WP D TYPE

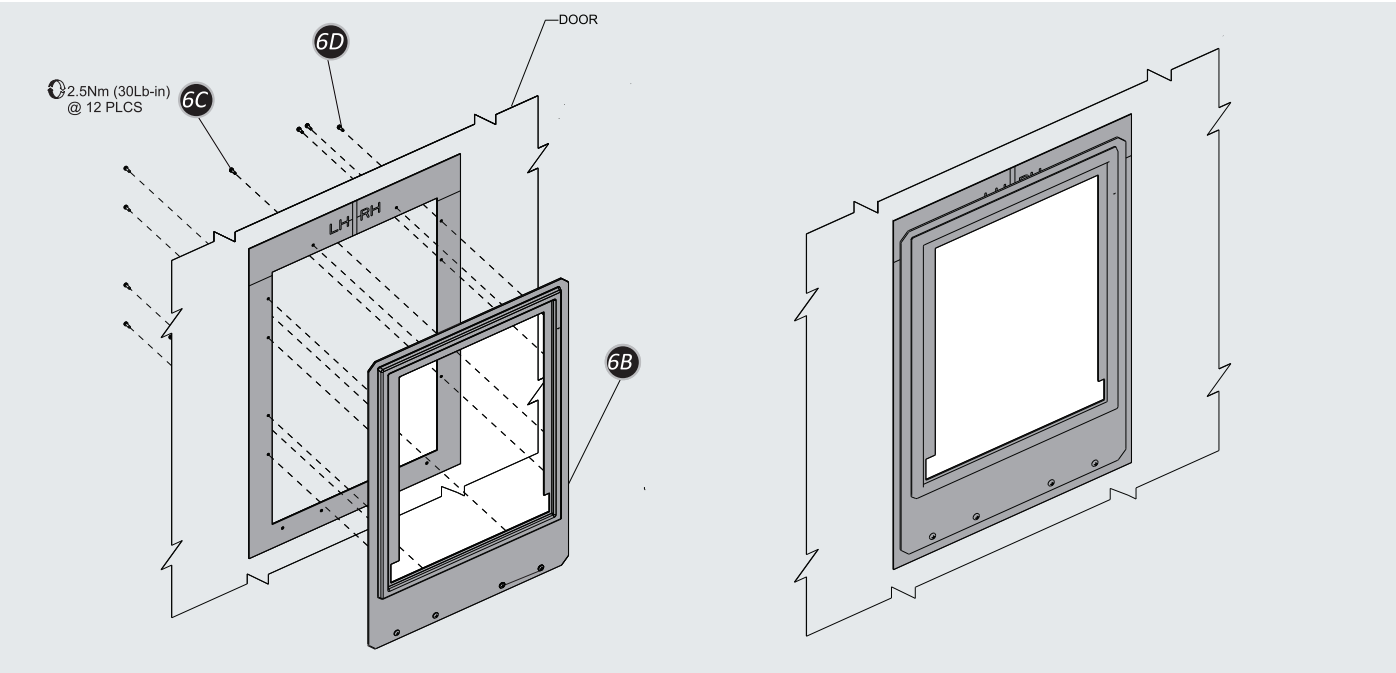

For more information please contact your local ABB Field Representative or Service Center litsed below:
ABB Inc.
1555 Scott Street
Senatobia, MS 38668
Ph-: 1-662-562-0700

© Copyright 2019 ABB. All rights reserved.
www.abb.com