2750 515-41 en, Rev. 7

Transformer bushings, type GOM
Installation and maintenance guide

Power and productivity
for a better world™

Original instruction

Safety information

Keep this instruction available to those responsible for the installation, maintenance, and operation of the bushing.

The installation, operation, and maintenance of a bushing present numerous potential unsafe conditions, including, but not limited to, the following:

- High pressures
- Lethal voltages
- Moving machinery
- Heavy components
- Slip, stumble or fall

Specialized procedures and instructions are required and must be adhered to when working on such apparatus. Failure to follow the instructions could result in severe personal injury, death, and/or product or property damage.

Additionally, all applicable safety procedures such as regional or local safety rules and regulations, safe working practices, and good judgement must be used by the personnel when installing, operating, maintaining and/or disposing such equipment.

Safety, as defined in this instruction, involves two conditions:

1. Personal injury or death.
2. Product or property damage (includes damage to the bushing or other property, and reduced bushing life).

Safety notations are intended to alert personnel of possible personal injury, death or property damage. They have been inserted in the instructional text prior to the step in which the condition is cited.

The following warnings and notes are used in the manual:

WARNING

WARNING indicates an imminently hazardous situation, which if not avoided, will result in death or serious injury. This signal word is to be limited to the most extreme situations.

WARNING also indicates a potentially hazardous situation which, if not avoided, could result in death or serious injury.

CAUTION

CAUTION indicates a potentially hazardous situation,which if not avoided, may result in minor or moderate injury. It may also be used to alert of unsafe practices.

CAUTION may also indicate property-damage-only hazards.

INFO provides additional information to assist in carrying out the work described and to provide trouble-free operation.

Content

1. Description 7
1.1 Design 7
1.2 Oil sampling 9
1.2.1 Sampling and filling procedure 9
1.3 Operating conditions 10
1.4 Mechanical loading 10
1.5 Spare parts 10

2. Installation 11
2.1 Tools 11
2.2 Consumables 11
2.3 Transport and handling 11
2.4 Lifting from the box 12
2.5 Mounting 12
2.5.1 Mounting of end-shield 13
2.5.2 Inner terminal / Stranded cable 13
2.5.3 Solid rod conductor 14
2.5.4 Tightening torque of the fastening bolts 14
2.6 Mounting of outer terminal 15
2.7 Flange earthing 15
2.8 Waiting time before energizing 15
2.9 Recommended tests before energizing 16
2.9.1 Tightness test between transformer and bushing flange 16
2.9.2 Tightness test of bushing outer terminal 16
2.9.3 Measurement of capacitance and tan δ 16
2.9.4 Check of through resistance 17

3. Maintenance 18
3.1 Recommended maintenance and supervision 18
3.1.1 Cleaning of insulator surface 18
3.1.2 Measurement of capacitance and tan δ 18
3.1.3 Thermovision (infrared camera) check for local overheating on connectors ... 18
3.1.4 Check for leakage 18
3.1.5 Checking and adjustment of the oil level 18
3.2 Disposal after end of service life 18

1. Description

1.1 Design

The design and dimensions of bushings type GOM are given in the Technical Guide, 1ZSE 2750-108. The design principle is also shown in Fig. 1. GOM bushings have a test tap, according to Fig. 2, which can be used for checking of the bushing insulation by capacitance and dissipation factor measurements. The tap is normally earthed by means of a spring device. For permanent connection of the test cable an adapter, 2769 531-D, according to Fig. 3 should be used. For temporary connection, adapter 2749 510-U should be used.

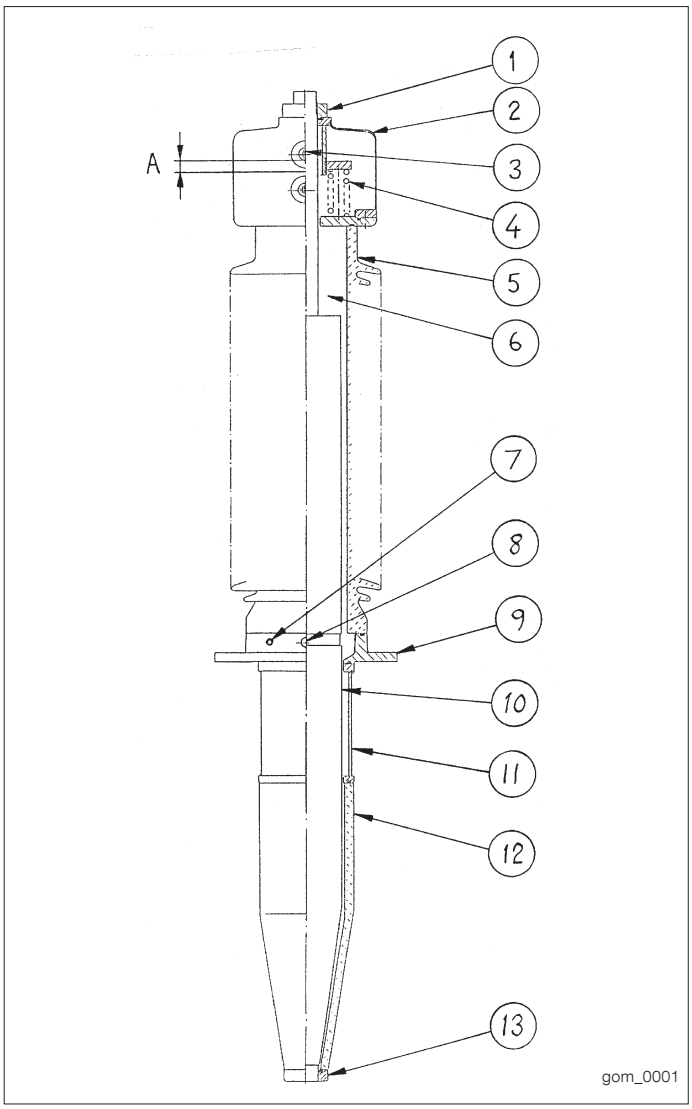

Fig. 1. Design principle

1. Top end nut
2. Top housing
3. Prism type glass, 2744 322-A
4. Set of springs
5. Porcelain insulator, air side
6. Oil
7. Ball valve 1/4", 2541 797-10
8. Test tap, 2769 531-B
9. Mounting flange
10. Condenser body
11. Flange extension
12. Porcelain insulator, oil side
13. Bottom end nut

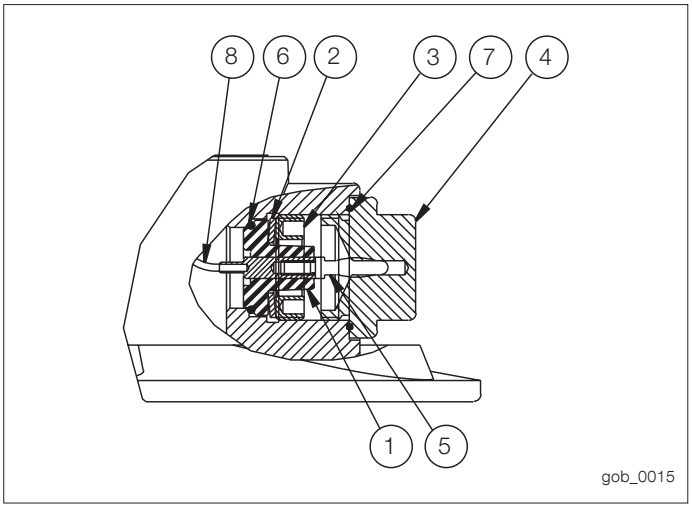

Fig. 2. Test tap 2769 531-B (not self-earthing)

1. Bushing for test tap
2. Disc spring
3. Press nut
4. Cover 2749 528-B with O-ring 2152 484-2
5. Contact pin, 4 mm
6. O-ring
7. O-ring
8. Cable

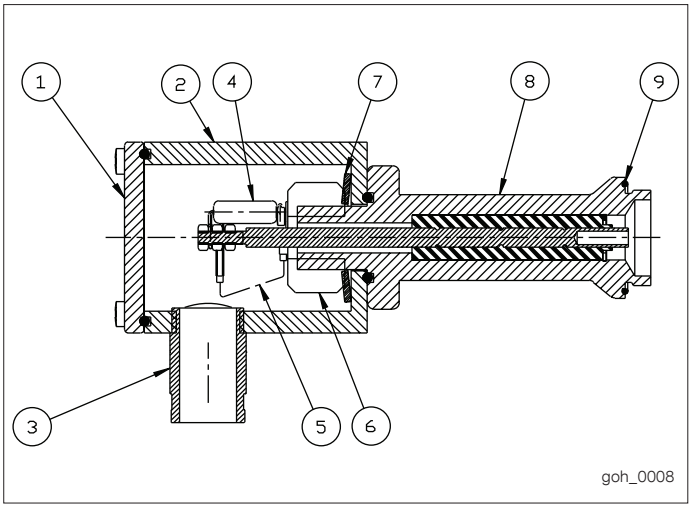

Fig. 3. Adapter for permanent connection to measuring circuits 2769 531-D

1. Cover
2. Box
3. Cable gland Pr (screwed steel conduit) 22.5 (Pg 16 acc. to DIN 40430)
4. Protecting resistor, 10 kW, 5 W
5. Earthing connection (to be removed before connection of outer cable)
6. Nut
7. Belleville spring washer
8. Connector to test tap
9. O-ring

1.2 Oil sampling

Due to the risk of improper re-sealing, oil sampling is not recommended as a field inspection on routine basis. Furthermore, temperature and load cycles prior to sampling influence the equilibrium and thus the test results. However, when a problem is known, e.g. elevated dissipation factor over C_1, oil sampling and analysis for dissolved gasses may provide important information.

Oil samples shall preferable be collected during dry weather conditions. If the sample is collected at any other conditions the following must be taken into account:

- Dry and clean the area around the sampling valve and filling plug carefully before sampling and filling.
- Protect the area around the sampling valve and filling plug from rain.

The internal pressure of the bushing must not be altered before and after the sampling as the bushing is supposed to work within a specified interval. This is satisfied if the sample is collected when the bushing average temperature is between 0 °C and 30 °C.

1.2.1 Sampling and filling procedure

Connect the end of the hose to a suitable nipple and connect the nipple to the valve on the flange, Fig. 4. The thread in the valve is R 1/4“.

Collect the oil according to “Oil sampling procedure” described in IEC 61464. Note that depending on the temperature the pressure inside the bushing may be above or below atmospheric pressure.

Replenishment of oil is not required after a single sampling. However, after several samples, the volume can be reduced to such an extent that makes a filling necessary.

The new oil shall comply to IEC 60296, transformers oils and shall be clean and dry. The oil filling shall be performed when the oil volume of all samples exceeds 400 ml.

For oil filling, the oil is to be added via the upper prism glass. The old gasek must always be replaced with a new one when the bushing is sealed after filling.

After the sampling is finished the bushing shall not be energized within 1 hour. This is due to the risk of potential air bubbles that might show up inside the bushing.

WARNING

During the sampling process it´s very important to avoid any bubbles from entering the bushing.

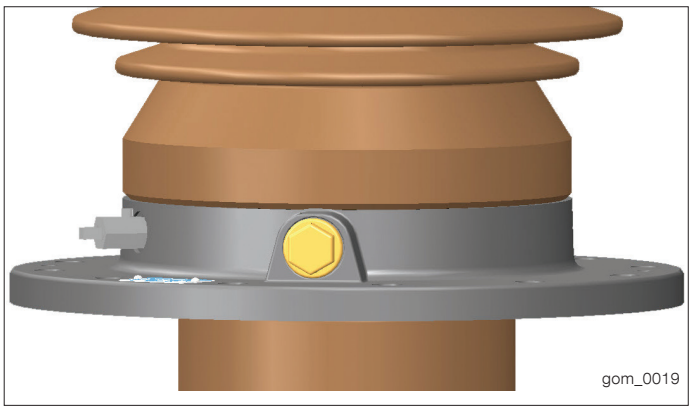

Fig. 4. Oil sampling valve.

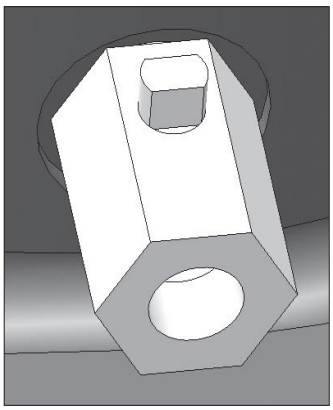

Fig. 5. Closed valve. Key width 5.5 mm for opening the valve.

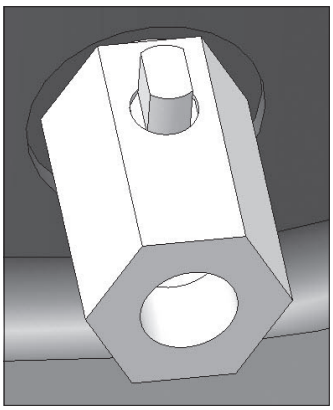

Fig. 6. Valve open.

1.3 Operating conditions

The table below show the standard technical specifications for the GOM oil - air bushings. For conditions exceeding the below values, please contact ABB.

Application:	Transformers
Classification:	Oil impregnated paper, capacitance graded, outdoor immersed bushing
Ambient temperature:	+40 °C to -40 °C, minimum value acc. to temperature class 2 of IEC 60137
Altitude of site:	< 1000 m
Level of rain and humidity:	1-2 mm rain/min. horizontally and vertically, as per IEC 60060-1
Pollution level:	According to specific creepage distance and IEC 60815
Immersion medium:	Transformer oil. Maximum daily mean oil temperature +90 °C. Maximum temporary oil temperature +115 °C.
Oil level in transformer:	Not lower than 30 mm from the bushing flange
Max pressure of medium:	100 kPa (over pressure)
Markings:	Conforming to IEC/IEEE.

1.4 Mechanical loading

The bushings are designed for the following cantilever loads applied to the midpoint of the top end terminal, perpendicularly to the bushing axis. In axial direction the GOM bushing can withstand 20 kN continuously. The maximum torque on the outer terminal stud is 250 Nm.

Table 1. Mechanical loading.

Bushing	Type test load 1 minute (N)	Max. service load (N)	
		0-30°	30-45°
LF 125 060-A, -B, -C, -G, -H, -K	3600	1700	1600
LF 125 060-D, -E, -F, -L, -M, -N	3200	1200	1100

1.5 Spare parts

In case of major damage to the bushing we recommend that it is sent back to ABB for possible repair and re-testing. Certain parts (Figs. 1, 2, 7 and 8), which may be damaged or lost during transport or installation, can be ordered from ABB.

2. Installation

2.1 Tools

- Soft slings
- Lifting eye screw M 12 (DIN 580) for mounting at an angle 2183 2001-3
- Pull-through cord with M8 swivel 9760 669-A
- Torque wrench key for hexagon head screws, head width 16 mm (M10) and 13 mm (M8)
- Key for hexagon socket head cap screw 6 mm. (For test tap cover)

2.2 Consumables

- Water free vaseline, Mobilgrease 28 or other lubricant not harmful to the transformer oil, to lubricate screws that come into contact with the transformer oil.
- Mobilgrease 28 or other suitable grease to lubricate and protect the earthing screw and the outer terminal o-ring gasket.
- Molykote 1000 or other suitable compound to lubricate the screws making the contact and sealing at the outer terminal.

2.3 Transport and handling

The bushing may be transported and stored horizontally up to 6 months. For storing over 6 months it is recommended to raise the bushing to vertical position with the top end upwards, or to inclined position with the top end upwards and at an angle of at least 7°. Keep the bushings dry and clean and protected against mechanical damage.

Keep the bushings protected from penetrating water when stored outdoors. This means that the case must not be stored in areas where it can be foreseen that the ground will be wet and muddy during heavy rains. Shelter the case from rain and snow with a tarpaulin or roofing.

Carefully inspect the bushing on receiving with regard to shipping damage. Please note that the bushing has been routine tested in oil and some oil may be left, especially in the narrow opening between condenser body and flange.

The bushings are normally delivered from ABB in boxes with the bushing supported by blocks and fibre boards. The boxes are marked with "Top End".

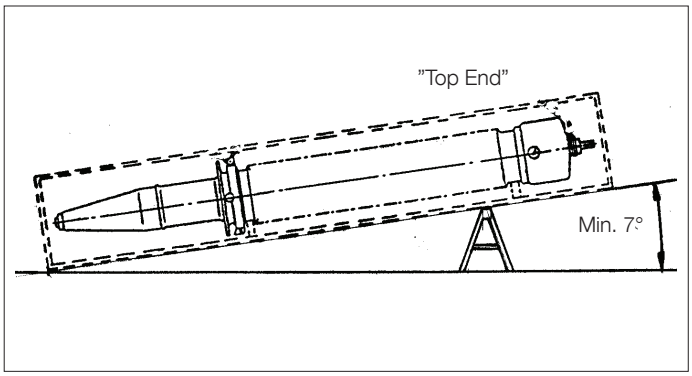

Fig. 7. Long-term storage.

2.4 Lifting from the box

CAUTION

For lifting the bushing from the box, apply two clean lifting slings as shown in the figure below. Support the bushing at the same points as in the box if placed on the ground or block it under the flange and the metal top piece.

2.5 Mounting

CAUTION

Lift the bushings with the aid of a lifting tool, see section 2.1 Tools. Lift the bushing to vertical position and to an angle according to the figures below. Use a soft bedding under the bottom end of the bushing, e.g. a rubber mat.

The mass of the bushing is stated on the marking plate. Carefully clean and inspect the oil end of the bushing and the inside of the centre hole before mounting on the transformer.

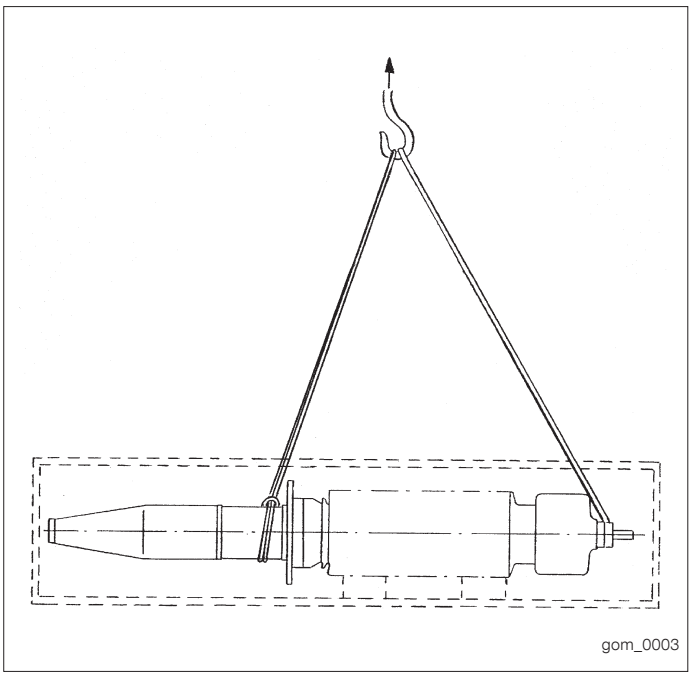

Fig. 8. Lifting from the box.

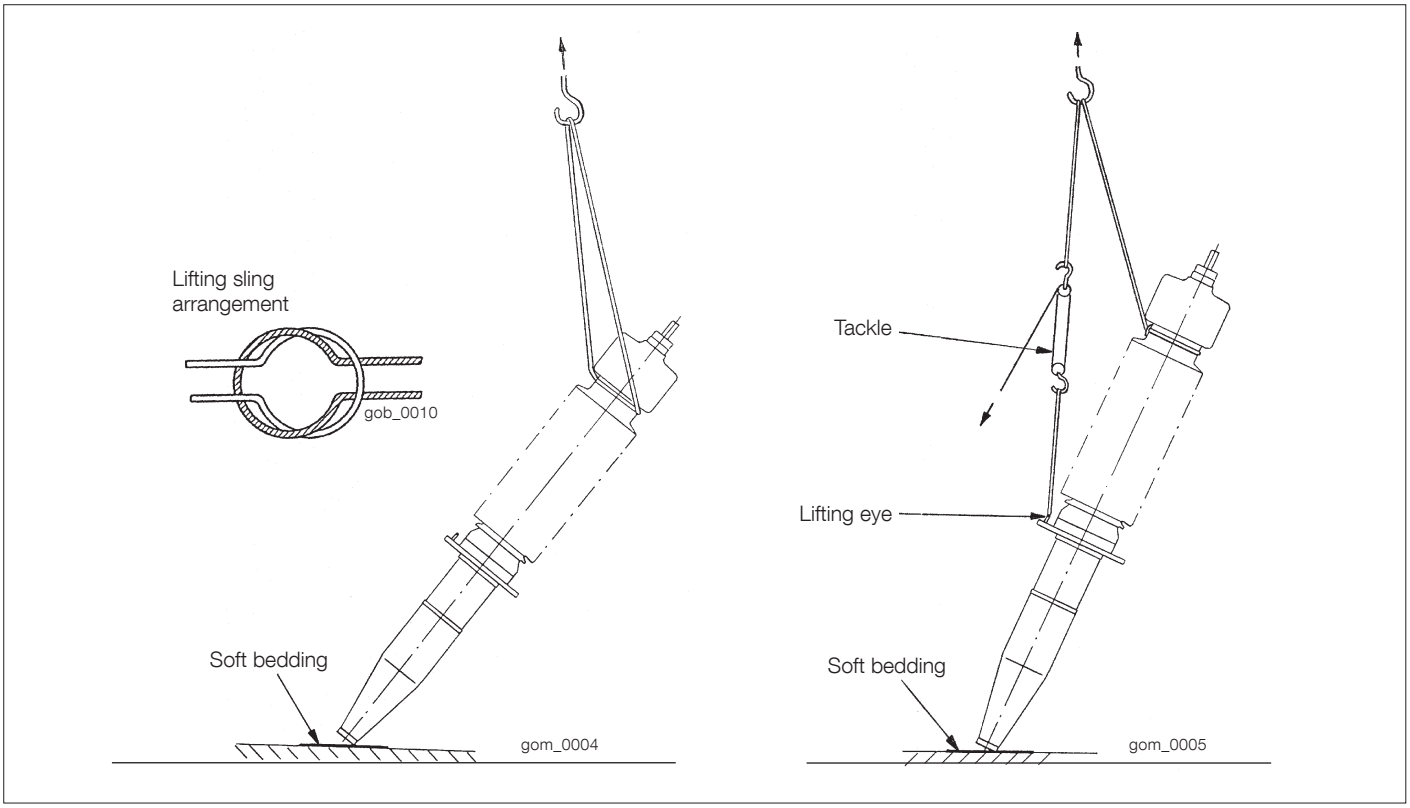

Fig. 9. Mounting.

2.5.1 Mounting of end-shield

> If the bushing is lowered in transformer oil, the air cushion in the end-shield must be vented by a hose.

The shield is packed in a plywood box with the fastening screws and the washers included.

The end-shield is mounted on the bottom end of the bushing according to Fig. 10.

2.5.2 Inner terminal / Stranded cable

> Mounting of the conductor must be performed according to the procedure below. The contact surfaces must be clean. The oxide on brazed terminals is to be removed by brushing.

1. Stretch the stranded cable with the brazed inner terminal, normally fastened to the cover plate. Avoid making any loops.
2. Drop the pull-through cord through the bushing centre hole.
3. Lift the bushing above the opening.
4. Fasten the M8 swivel to the inner terminal at the end of the stranded cable. Lower the bushing into the transformer while directing the stranded cable by keeping the pull-through cord taut.
5. Fix the bushing to the cover according to section 2.5.4.
6. Lock the inner terminal with the divided ring according to Fig. 11.
7. Gently release the pull-through cord so the conductor rests on the divided ring.
8. Remove the pull-through cord.
9. Proceed immediately to section 2.6.

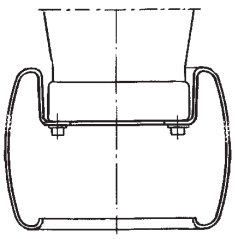

Fig. 10. Mounting of end-shield.

1. End-shield
2. Washer 6.4 x 12 x 1.5
3. Socket screw M6 x 16

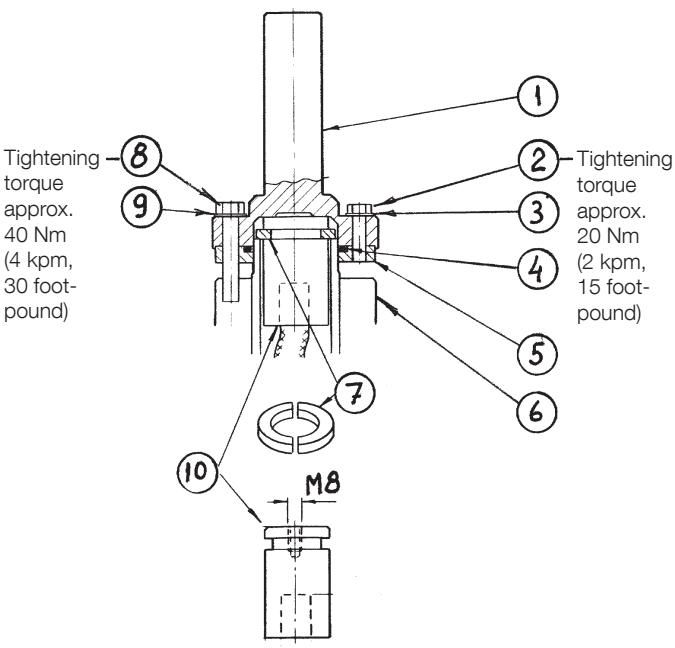

Fig. 11. Outer and inner terminal stud.

1. Outer terminal stud
2. Hexagon screw M8 x 30
3. Conical spring washer 8.4 x 18 x 1
4. Gasket (O-ring) 54.2 x 5.7
5. Tightening ring for gasket
6. Top end of bushing
7. Divided ring
8. Hexagon screw M10 x 60
9. Washer 10.5 x 22 x 2
10. Inner terminal stud

2.5.3 Solid rod conductor

Mounting of the conductor must be performed according to the procedure below. The contact surfaces must be clean.

The lower part of the solid conductor is normally fastened to the cover plate of the transformer during the transport. The top part is usually delivered to site with the bushing.

1. Drop the pull-through cord through the bushing centre hole.
2. Fasten the M8 swivel to the top part of the solid conductor.
3. Partly pull the top part of the solid rod up into the bushing centre hole, leaving the part with the jointing hole(s) sticking out.
4. Secure the pull-through cord so the solid rod conductor top part cannot fall out of the bushing.
5. Lift the bushing with the solid rod attached above the opening.
6. Lower the bushing until the two solid conductor parts meet.
7. Lubricate 3 x M10 screws with water-free vaseline, Mobilgrease 28 or other lubricant not harmful to the transformer oil. Insert and tighten to 35-40 Nm.
8. Lower the bushing into the transformer while directing the assembled solid rod conductor by keeping the pull-through cord taut.
9. Fix the bushing to the cover according to section 2.5.4.
10. Lock the solid rod with the divided ring according to Fig. 12.
11. Gently release the pull-through cord so the conductor rests on the divided ring.
12. Remove the pull-through cord.
13. Proceed immediately to section 2.6.

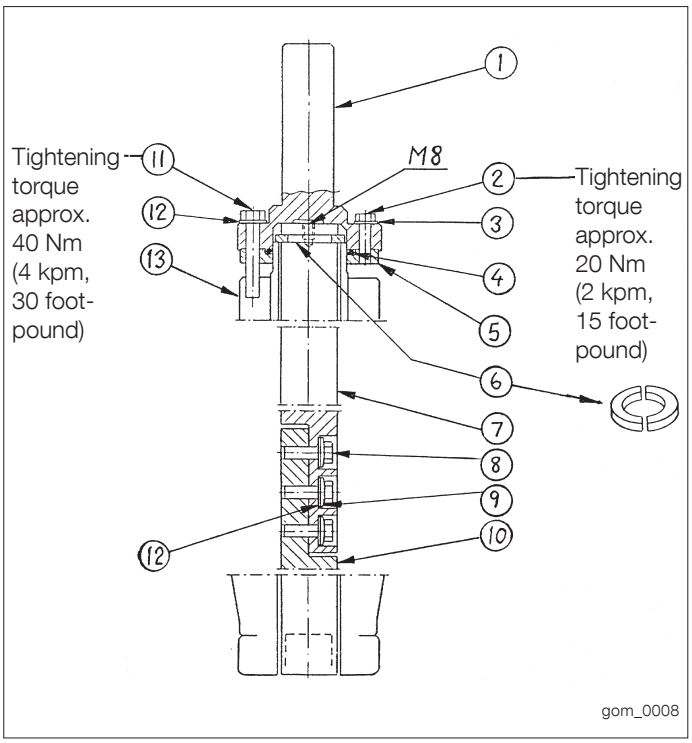

Fig. 12. Solid conductor

1. Outer terminal stud
2. Hexagon screw M8 x 30
3. Conical spring washer 8.4 x 18 x 1
4. Gasket (O-ring) 54.2 x 5.7
5. Tightening ring for gasket
6. Divided ring
7. Upper conductor
8. Hexagon screw M10 x 30
9. Disc spring
10. Lower conductor
11. Hexagon screw M10 x 60
12. Washer 10.5 x 22 x 2
13. Top end of bushing

2.5.4 Tightening torque of the fastening bolts

When designed with a space according to Fig. 13, the bolts must not be tightened until the flange will crack.

The tightening torque of the fastening bolts must be adjusted after the bolt size and the cover design. Ensure to tighten the bolts evenly crosswise in order to avoid damages to the flange.

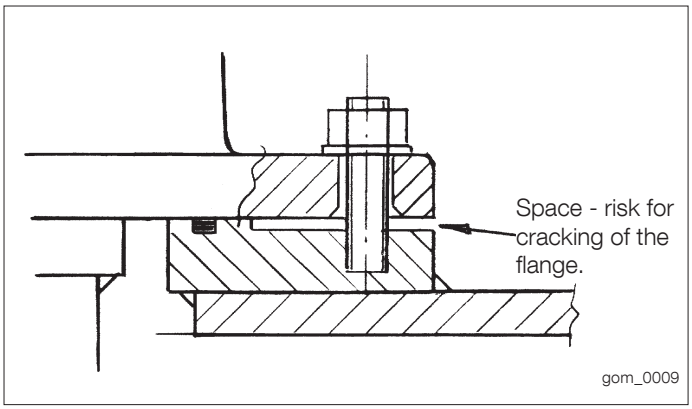

Fig. 13. Risk for cracking of the flange.

2.6 Mounting of outer terminal

Before connection of conductor clamps, the outer terminals of aluminium must be carefully wire brushed and greased with a contact compund or vaseline. The inner contact surface on aluminium outer terminals are tin-zink plated, and wire brushing must thus not be carried out.

In order to obtain the correct pressure and a low contact resistance, the following must be carried out:

1. Clean the contact and gasket surfaces carefully.
2. Lubricate the O-ring with Mobilgrease 28.
3. Assemble the tightening ring, the O-ring, and the outer terminal stud and push them over the inner terminal with the divided ring in place.
4. Grease all bolts on thread and underneath the head with Molykote 1000, or other suitable compound.
5. Insert and tighten the screws M10, with plane washer, which press the stud against the inner terminal (or solid conductor). Tighten stepwise to a final torque of 40 ±4 Nm.
6. Insert the M8 screws, with conical spring washer and plane washer, which hold the tightening ring. Tighten them to press the gasket into place. Tighten cross-wise to a final torque of 20 ±2 Nm.

It is extremely important in both cases to tighten evenly. The bolts shall thus be tightened in steps, alternately on both sides.

2.7 Flange earthing

CAUTION

Proper earthing is essential

The bushing flange is provided with a tapped hole M12. After tightening the bolts fixing the bushing to the transformer tank, the flange should be earthed. This prevents electrical discharges between bushing flange and transformer tank under normal service conditions.

Alternative 1
Insert a heavily greased (Mobilgrease 28 recommended) pointed set screw M12 (stainless steel A4-80 preferrably). Tighten to 40 Nm, penetrating the paint of the transformer tank down to the metal underneath. This makes an electrical connection between the bushing and the transformer tank, keeping them at the same voltage.

Alternative 2
Apply a flexible cable between the M12 earthing hole in the bushing flange and a corresponding connection point in the transformer. Grease the screw (Mobilgrease 28 recommended) and tighten the M12 in the bushing to 40 Nm. Connect the other end of the cable to the transformer.

2.8 Waiting time before energizing

When a bushing has been stored horizontally, it must be raised with the top up for at least 12 hours before service voltage is applied and 24 hours before test voltage is applied. If, by mistake, the bushing has been stored horizontally more than one year, it must be placed in the vertical position for at least one week before energizing. Some waiting time may be necessary before energizing in order to avoid flashovers or partial discharges due to airbubbles at the bushing surface. Choose a suitable procedure below.

Vacuum filled transformer
No waiting time is necessary from the bushing point of view.

De-gassed oil-filled transformer
During mounting, use a clean and dry paintbrush to release surface bubbles. Wait 6 hours before energizing.

Gas-saturated oil-filled transformer
During mounting, use a clean and dry paintbrush to release surface bubbles. Wait 24 hours before energizing.

De-gassed oil filled transformer with reduced oil-level
After restoring the oil-level, wait 24 hours before energizing.

For all alternatives except vacuum-filled transformer, the oil should be allowed to enter the centre tube to at least flange height by releasing the outer terminal sealing system and allowing air to escape this way.

2.9 Recommended tests before energizing

The following tests may be performed to check the insulation, sealing and current path of the bushing. The tests should be made after mounting, but before connecting the outer terminal of the bushing to the rest of the switchyard power circuit.

2.9.1 Tightness test between transformer and bushing flange

Several different methods may be used and we thus refer to instructions given by the company responsible for the field erection. As a simple example, the tightness of the seal between transformer and bushing flange may be checked when the transformer is oil-filled by using chalk or, perhaps easier, with paper strips.

2.9.2 Tightness test of bushing outer terminal

Since the top terminal is often situated above the oil level of the transformer expansion system, a leak at this point is extremely serious, because water could enter directly into the transformer insulation this way. It is thus recommended to make a tightness test after assembly, preferably both with vacuum and over-pressure. Several different methods may be used and we refer to instructions given by the firm responsible for the field erection.

One possible method is the tracer gas method:

1. Put a tracer gas into the centre tube before mounting the outer terminal. The oil level of the transformer must be above the bottom end of the bushing but below the bushing flange.
2. Increase the pressure in the center tube by increasing the oil level as much as possible.
3. Search with a gas detector (sniffer) for leaking gas at the gasket.

2.9.3 Measurement of capacitance and tan δ

CAUTION

The test tap is not self-earthing.

Since C_2 usually is relatively small, the test tap must never be open-circuited when applying a voltage to the bushing. It shall always be earthed or connected to an external impedance. No connection may destroy the bushing. Recommended maximum voltage for C_1 is 10 kV and for C_2 500 V.

When not measuring, always make sure that the cap nut is properly tightened with the gasket in place. This is to prevent dust and water from coming in to the test tap.

After mounting, a capacitance measurement is recommended. Connect a measuring bridge between the outer terminal and the test tap by using a Ø 4 mm lead coupler or ABB's test tap adapter 2749 510-U. This is possible without removing the bushing as the bushing has an insulated test tap, see Fig. 14. More details can be found in the product information 2750 515-142, "Bushing diagnostics and conditioning".

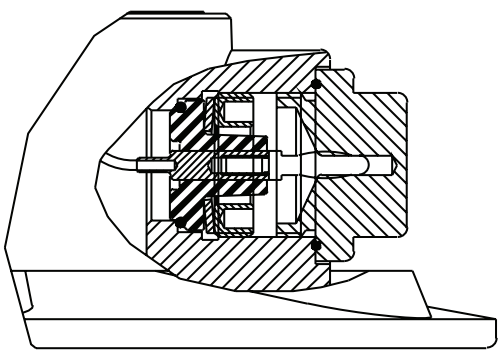

Fig. 14. Test tap 2769 531-B (not self-earthing).

With the transformer de-energized and the bushing outer terminal disconnected, the test tap cover is removed. The measuring equipment is connected to the test tap and the measuring voltage source to the bushing terminal.

The capacitances C_1 between the centre tube and the tap, and the capacitance C_2, between the test tap and earth are marked on the marking plate. The nominal capacitances C_1 of the different bushing types are listed in Table 3. C_2 is highly dependent on the surrounding parts inside the transformer and it is not possible to give a nominal value valid for all service conditions.

Table 2. Nominal capacitances in pF (Manufacturing tolerances for C_1 ±10%).

Catalog No.	Nominal capacitance (pF)	
	C_1	C_2
LF 125 060-A, -G	265	130
LF 125 060-B, -H	310	460
LF 125 060-C, -K	360	700
LF 125 060-D, -L	355	130
LF 125 060-E, -M	415	495
LF 125 060-F, -N	425	700

The dissipation factor varies with the temperature of the bushing body, and the measured value should thus be multiplied with the correction factor (multiplier) given in Table 3.

Table 3. Dissipation factor variations as a function of temperature.

Bushing body temperature °C	Multiplier to 20 °C
3-7	0.85
8-12	0.90
13-17	0.95
18-22	1.00
23-27	1.05
28-32	1.10
33-37	1.15
38-42	1.20
43-47	1.25
48-52	1.30

2.9.4 Check of through resistance

This method can be used to detect very large faults in the current path, such as disruptions, and is not a tool for diagnostic of the bushing.

The through-resistance measurement method depends on the design of the transformer. Generally, a current is applied from bushing to bushing. The voltage drop from outer terminal to outer terminal is measured. The resistance is calculated with Ohm's law, U = R·I. (U: Measured voltage drop. I: Through current. R: Total circuit resistance.)

The total through resistance is the sum of the transformer winding and lead resistance and the bushing conductor and contact resistance. The additional resistance from he bushing conductor should not be more than 10 ... 100 mΩ. Since the through resistance of the HV winding of a typical power transformer is in the order of 0.1 ..1 Ω, this is a very rough method that can only be used to detect very large faults in the current path, such as disruptions.

Less-than-perfect contacts can only be detected by making a sensitive measurement across each connection point, or by measuring the temperature increase during operation with an infrared sensitive camera (thermovision).

3. Maintenance

The GOM bushings are maintenance-free. It is recommended to note the oil level during normal routine inspections in the plant.

WARNING

No work at all can be performed on the bushing while it is energized or not earthed.

3.1 Recommended maintenance and supervision

3.1.1 Cleaning of insulator surface

Avoid having solvent on the bushing gasket and porcelain joints.

Under conditions of extreme pollution it may be necessary to clean the porcelain insulator surface. This should be done by water-jet or by wiping with a moist cloth. If necessary, ethyl-alcohol or ethyl-acetate may be used.

3.1.2 Measurement of capacitance and tan δ

Please refer to Chapter 2 Installation.

3.1.3 Thermovision (infrared camera) check for local overheating on connectors

At maximum rated current, the bushing outer terminal normally takes a temperature of about 35 to 45 °C above the ambient air. Significantly higher temperatures, especially at lower current loading, can be a sign of bad connections.

3.1.4 Check for leakage

Make a visual inspection for oil leakage during normal station supervision.

3.1.5 Checking and adjustment of the oil level

GOM has two glasses and the oil level at 20 °C is to be between the two glasses. The oil level change is approximately 8 mm per 10 °C.

The correct oil levels are shown in Table 4. If the oil level is too high, oil can be drained out by means of the ball valve. If the oil level is too low, clean and dry transformer oil must be added via the upper prism glass. Adjustment of oil level is allowed only when the temperature of the bushing is +5 °C to +35 °C. For further information on oil sampling, see product information 2750 515-142.

For topping-up of the bushing, any clean and dry transformer oil available at site may be used.

Table 4. Oil level for bushings.

Climate	Normal	Desert
Ambient daily mean max °C	30	42
Ambient min °C	-40	0
Oil level A mm at 20 °C	50 ±7	70 ±7

3.2 Disposal after end of service life

The bushing consists of the following material:

- Conductor of copper or low-alloy aluminium.
- Terminals of copper, brass or low-alloy aluminium may be plated with for instance silver, tin, gold or nickel in layer thickness up to 20 µm.
- Transformer oil as per IEC 60296, class 2.
- Transformer oil impregnated condenser body consists of paper and 1 % Al foils.
- Centre tube, on which the condenser body is wound, consists of Al alloy.
- Top housing, flange, top nut, bottom end nut, flange extension and end-shield consist of Al alloys.
- Press ring for oil level glass and test tap cap consist of plated brass.
- Prism glass consists of glass.
- Insulators consist of quartz or alumino silicate based porcelain.

Contact us

ABB AB
Components
SE-771 80 Ludvika, Sweden
Phone: +46 240 78 20 00
Fax: +46 240 121 57
E-Mail: sales@se.abb.com

www.abb.com/electricalcomponents

Power and productivity
for a better world™