Information YT 220-319E

Reg.no 4890 064-272

May 1988

TYRAK S
Three phase thyristor convertor (40-530 A)

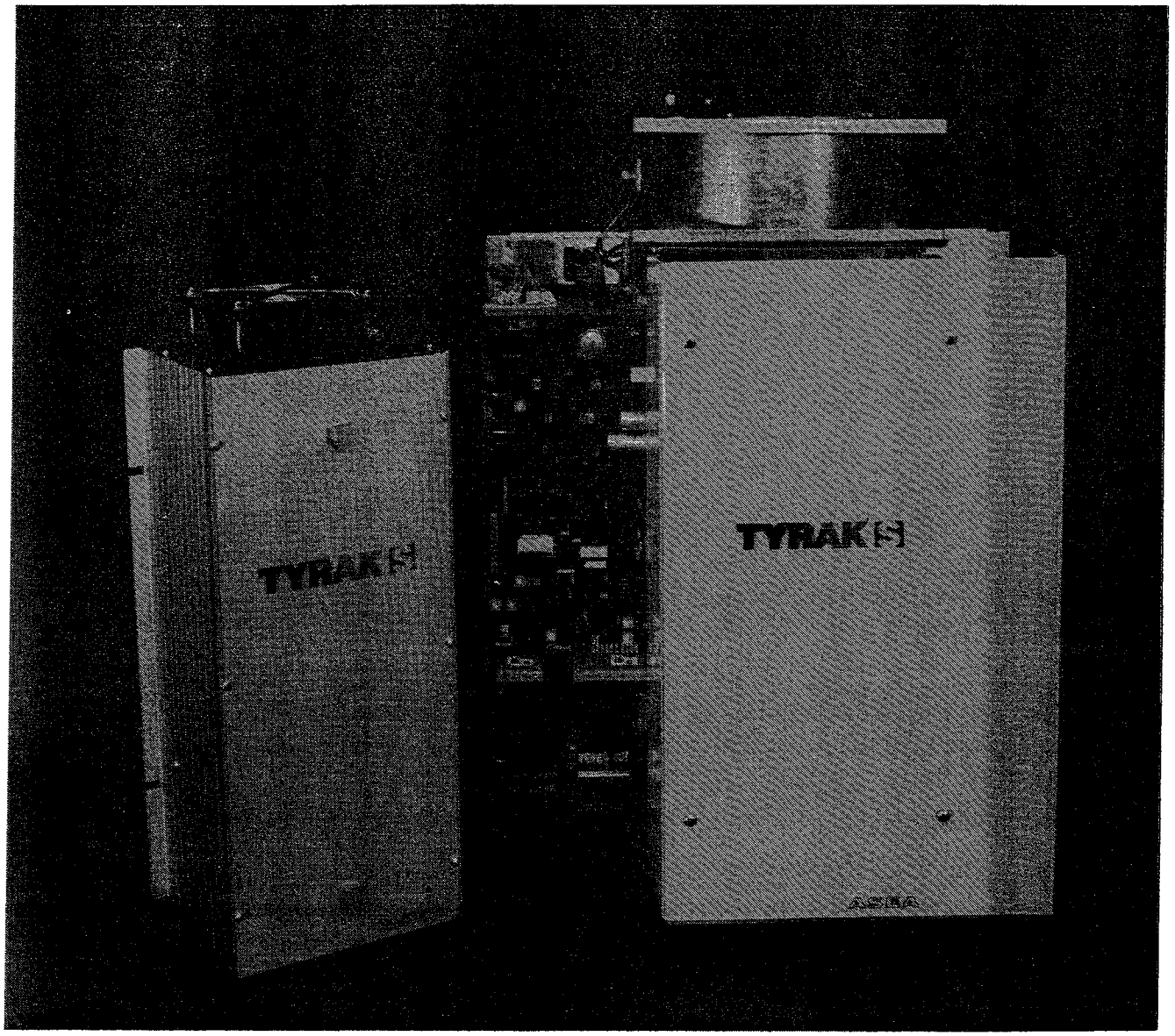

(870483)

Contents Page

INSTALLATION

INSTALLATION

The convertor is intended for indoors installation in an ordinary industrial environment with ambient temperatures −5 °C to +40 °C. The air is to be free from dust and aggressive gases.

Physical installation

The convertor is to be installed vertically with the connections downwards. It can be placed directly on a wall (screen protected) or enclosed in a cubicle. No particular cubicle type or installation procedures are required. Convertors with ratings 170-530 A are delivered on a 19" base plate and can therefore be installed directly in an optional 19" enclosure. The following points should however be observed.

1. The convertor module must receive an adequate supply of cooling air. The air temperature 10 cm under the thyristor bridge must be less than + 40 °C for the convertor to be loaded in accordance with the ratings. Avoid installing the convertor over apparatus developing any quantity of heat. The free passage for cooling air before and after the convertor (cubicle intake and exhaust) should not be less than 500 cm^2 for convertors with ratings 170-530A and not less than 300 cm^2 for convertors with ratings 40-120 A. The exhaust is to be located above the top of the convertor.

2. Space must be left free 10 cm above and below the convertor and 5 cm at the sides. Note that the fan on the convertor module 170-530A exhausts backwards and free space must be available there also.

CONNECTIONS

A.c. voltage

- Three phase a.c. voltage L1, L2, L3 is to be connected to the main circuit. The maximum permissible short circuiting current (symmetrical rms value) in the mains supply is 50 kA.

- 220/230 V 50/60 Hz single phase voltage is to be connected to the convertor cooling fans.

The power requirements for 40-120A convertors and 170-530A convertors are approximately 25 VA and 200 VA respectively. The a.c. voltage is fused conventionally. The fan in 170-530 A convertors has a built-in thermal contact connected in the operating circuit.

Fuses

The convertor is to be connected to the mains via a load breaker switch and fuses. The fuses are selected for convertors with different current ratings in accordance with the following table:

Current rating	Max-fuse	
	DIN	BS, UL
40 A	50	50
80 A	100	100
120 A	125	125
170 A	200	200
250 A	315	300
350 A	500	450
530 A	630	600

Y (G,H) MM	Manufacturer	Designation	Data	Cat.no
40A	LK-NES FERRAZ LK-NES FERRAZ	LK 170 L 3104 660 C4 URF 32	32A, 660V, DIN 80 32A, 660V, DIN 80 40A,	5675 566-408 5675 566-408 5675 566-409
80A	LK-NES FERRAZ	LK 170 L 4029 660 C4 URF63	63A, 660V, DIN 80 63A, 660V, DIN 80	5675 566-411 5675 566-411
120A	LK-NES FERRAZ	LK 170 L 4220 660 C4 URF125	125A, 660V, DIN 80	5675 566-414

Each fuse requires a fuse holder: LK-NES, 170 A 1005, Cat.no 5676 510-7

Semiconductor fuses

Thyristors in convertors with ratings 40-120A should also be protected with special semiconductor fuses in each phase conductor. The following fuse types (or equivalent) are recommended: (Note: these fuses are integrated in the basic versions of 170-530 A convertors).

Phase reactors

Phase reactors must be used in double YHMM convertors if more then one convertor is connected to the same mains supply, to protect the thyristors against excessive voltage transients. Sufficient inductance is obtained if the length of the supply cable exceeds 25m.

Suitable reactor units:

40A	YT 223 002 -DP	15 µH per phase
80 A	-DR	15 µH per phase
120 A	-DS	15 µH per phase
170-530A	4893 1004-T	6 µH per phase

Note: The reactor unit is cooled with a separate fan in convertors with ratings 350-530A.

Overload protection

The use of a direct-on-line starter in the a.c. supply is recommended for overload protection of the motor. The following equation is to be used when selecting the starter:

Phase current = 0.82 x d.c. current

Field excitation

Single phase a.c. voltage U_v up to a maximum of 440 V can be connected.

$$\text{The rectified field voltage } U_{field} = \frac{U_v}{1,1}$$

In certain cases, an auto-connected transformer may be needed to adapt the a.c. voltage so that the correct field voltage is obtained for the motor concerned.

The a.c. voltage supply is fused in the conventional way with diazed or equivalent fuses. (If the field current is less than 1,5 A, the auxiliary supply fuses 13 and 14 in the convertor can be used. These are accessible on the connection terminal block.

D.c. voltage

The rotor and field circuits of the motor are to be connected to the convertor module shown in figure 1.

Control circuit

For speed control, the speed reference and speed feedback are to be connected to the control board contact, X1, as shown in figure 1.

Speed reference

a) In the simplest cases, a potentiometer is used (5 kohm, 2 W).

b) The inputs SP REF 1 and SP REF 2 are also intended for connection to an external reference generator with signal level (– 10 V) - 0 V - + 10 V.

c) Input SP REF 3 is provided with a potentiometer "LEVEL" which can be used, for example, for setting minimum speed, for IR compensation with speed control with voltage feedback or for compensation in accordance with point d).

d) Input SP REF 4 is intended for reference generators with signal level 0 (or 4) - 20 mA. With signal level 4 - 20 mA, input SP REF 3 is connected to – 10 V and potentiometer "LEVEL" is used for compensation of 4 mA.

Speed actual value

a) When controlling speed with tachometer feedback, the tachometer is connected as shown in Figure 1. The maximum voltage permitted is 330V. Note the polarity requirements!

b) When controlling speed with voltage feedback, the use of a voltage measurement device is recommended to isolate the main circuit from the control circuit. The actual value from the voltage measurement unit is connected in the same manner as the actual value from the tachometer.

Speed feedback

a) With speed control using tachometer feedback, the tachometer is connected in accordance with figure 1. The max. permissible voltage is 330 V. Note the polarity.

b) With speed control using voltage feedback, the use of a voltage measurement device is recommended to isolate the main circuit from the control circuit. The feedback from the voltage measurement device is connected in the same way as the feedback from the tachometer.

OPERATION

Switch-on

No special coupling sequence is necessary as the control equipment automatically adopts a ready-for-run status approximately 50 ms after switching on the supply voltage.

Switch-off/tripping

a) When using a single convertor, YGMM, no special operating sequence is necessary for switch-off/tripping.

b) The following general rules apply for double convertor switch-off operations *):

- Activate external phase retardation via a phase inhibiting relay connected to X1:13-14. See also EXTERNAL PHASE RETARDATION.

- Open the main contactor (on-line starter) after a delay of approximately 0.1 s or more.

*) An exception can be made from this general rule if the motor in a particular drive is always "dead" or at rest at switch-off/tripping.

External phase retardation (X1:13-14 and X3:4)

a) For the convertor, activation of external phase retardation means that the trigger pulses are displaced to the limit for maximum inversion and the output voltage from the speed controller (= current reference) and the output voltage from the ramp generator are forced to zero volt.

b) An open contact X1:13-14 means phase retardation of the convertor. The relay contacts are intended for loading currents less than 3 mA.

c) When external phase retardation is used, jumper S3:3-4 is to be removed from the control board YXT 121.

d) External phase retardation can be utilized for both single and double convertors in drive equipment in which, under certain conditions, the motor is to be disconnected or is to be stopped without operating the main contactor (on-line starter).

e) For external phase retardation of the ramp, the 15 V-signal connected to X3:4 is to be disconnected.

Connection, 40-120A

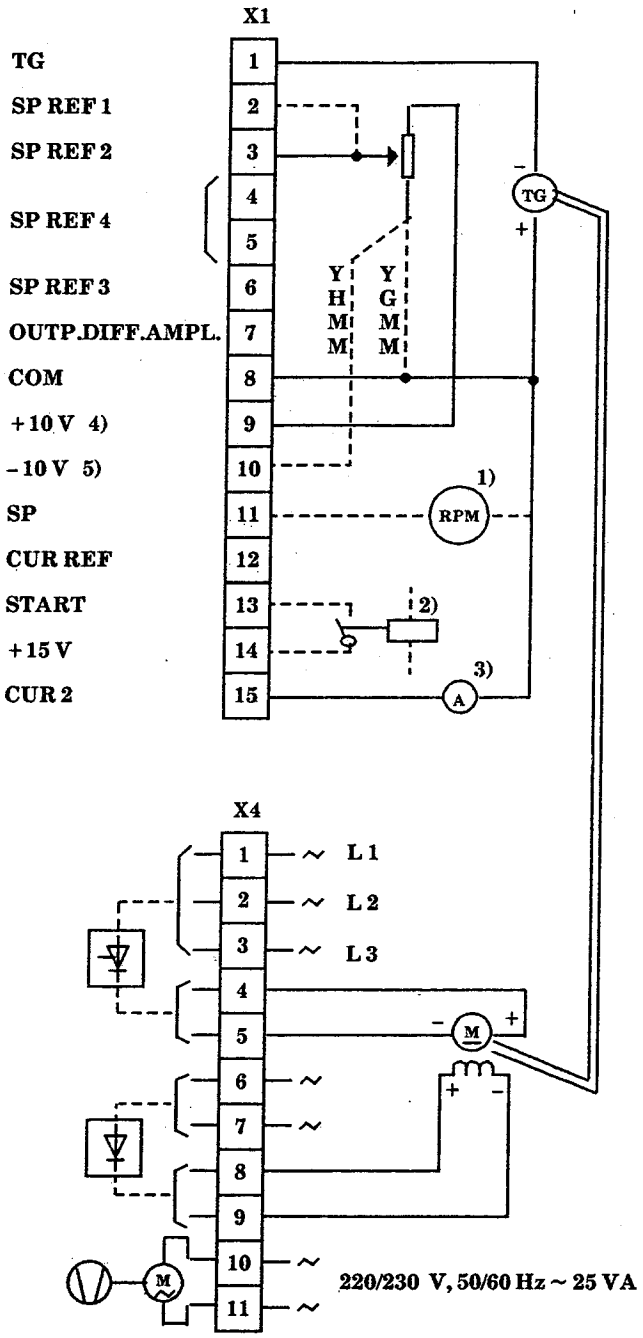

Permissible cable area

Contact	Cable area mm²
X1: 1 - 15	2,5
X3:1-8	2,5
X4: 1 - 5	16 för $I_{dN} \leq 80$ A 35 för $I_{dN} = 120$ A
X4: 6 - 11	2,5

1) Signal level max + 10V.
Max permissible load current 10 mA

2) Relay for external phase retard/phase advance control
Cf. EXTERNAL PHASE RETARDATION

3) Signal level 0 V - + 10 V
Max permissible load current 10 mA

4) Max permissible load current + 10 mA

5) Max permissible load current – 10 mA.

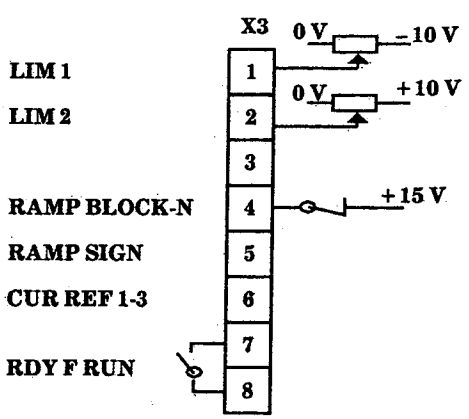

Connection of supply voltage

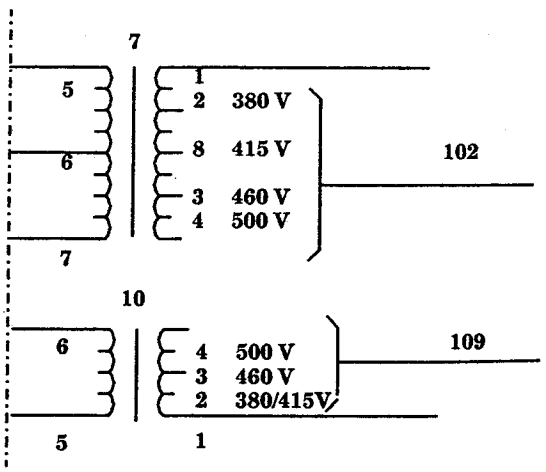

Connection 170-530 A

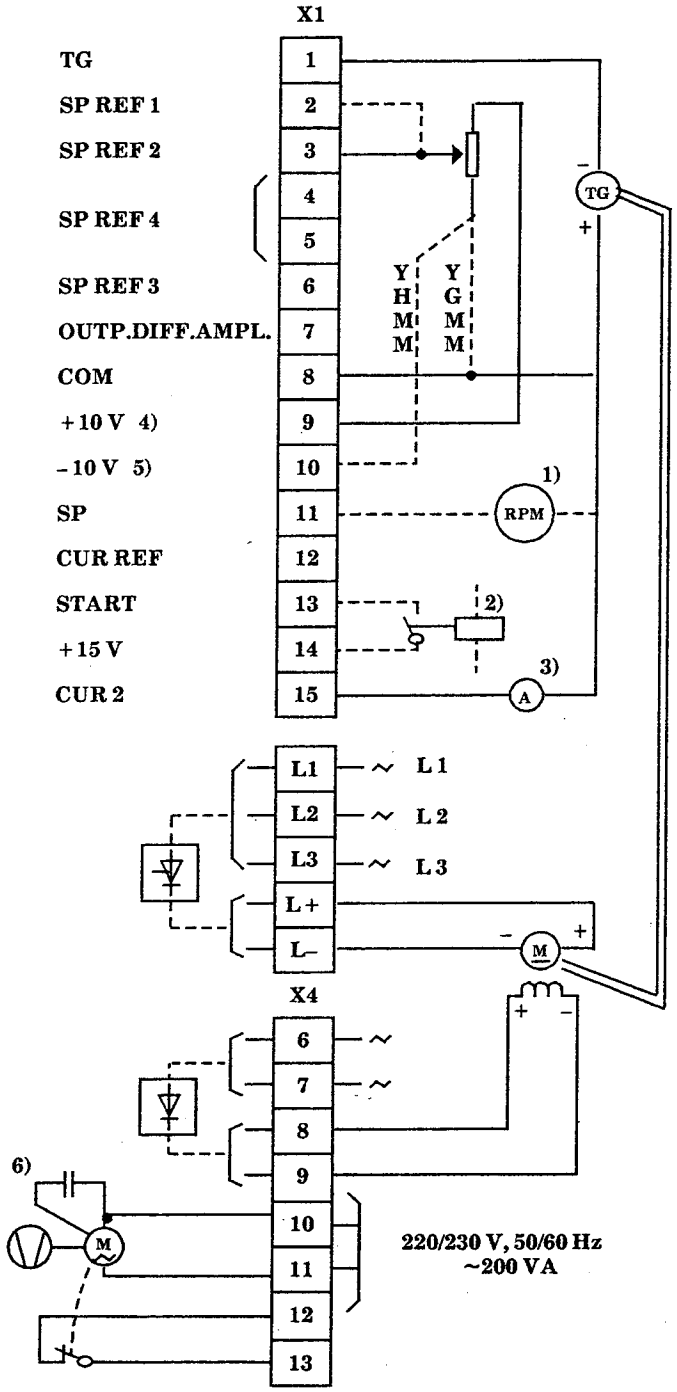

Permissible cable area

Contact	Cable area mm2
X1: 1 - 15	2,5
X3: 1-8	2,5
X4: 1 - 10	2,5

1) Signal level max + 10V
Max permitted load current 10 mA

2) Relay for external phase advance/phase retardation
Cf. External phase retardation

3) Signal level 0V- + 10V
Max permissible load current 10 mA

4) Max permissible load current + 10 mA

5) Max permissible load current - 10 mA

6) For connection to 60 Hz, the start capacitor must be replaced.
Catal. no: 4984 219-4, 3 µF 250 V (170-350A)
4984 219-6,5 µF 250V (530A)

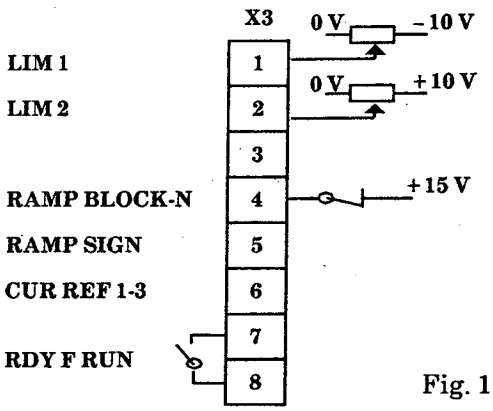

Fig. 1.

Connection of supply voltage

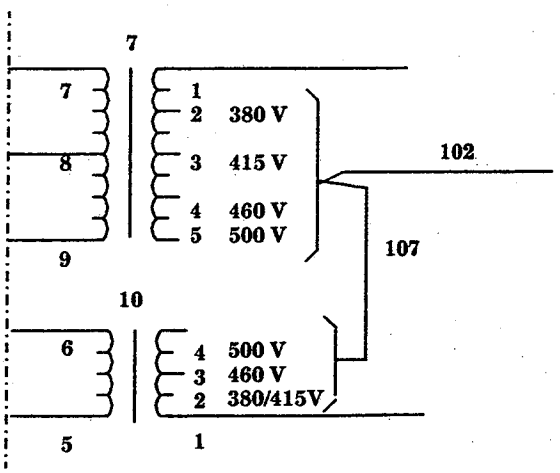

DIMENSIONS 40-120 A

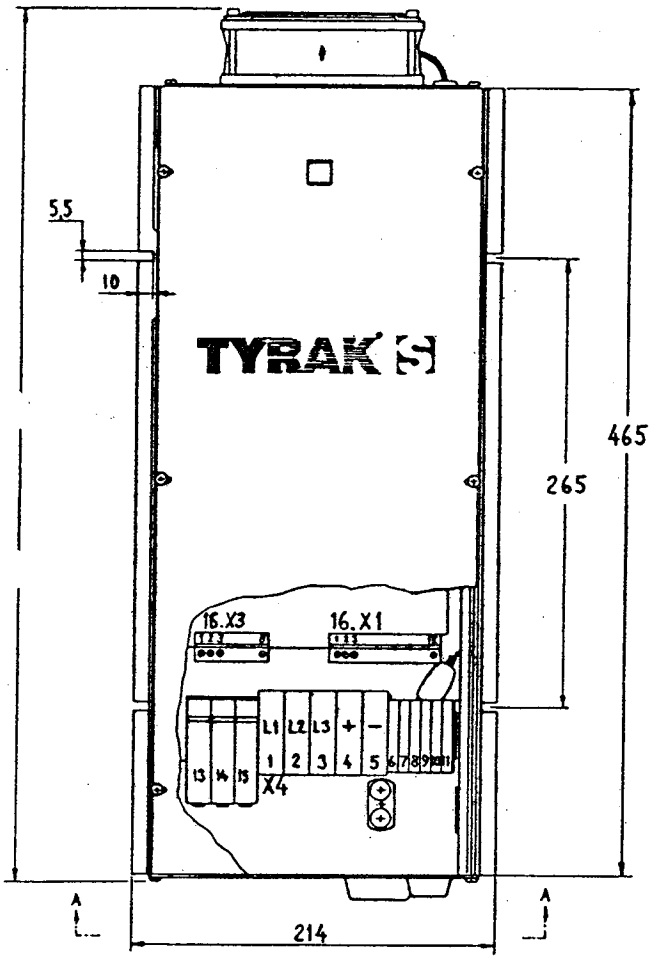

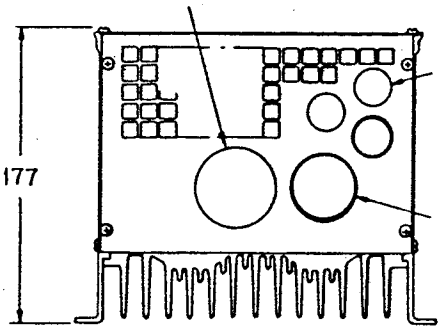

A - A

Weight: 8,5 kg

installation instructions

100 m³/h
3.6 mm vp

Cover plate
YT 223 002-AZ

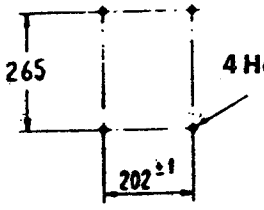

4 Holes for fixing screws, M5

Fixing to wall

Fixing to flat bar or similar
Cover plate YT 223 002-AZ

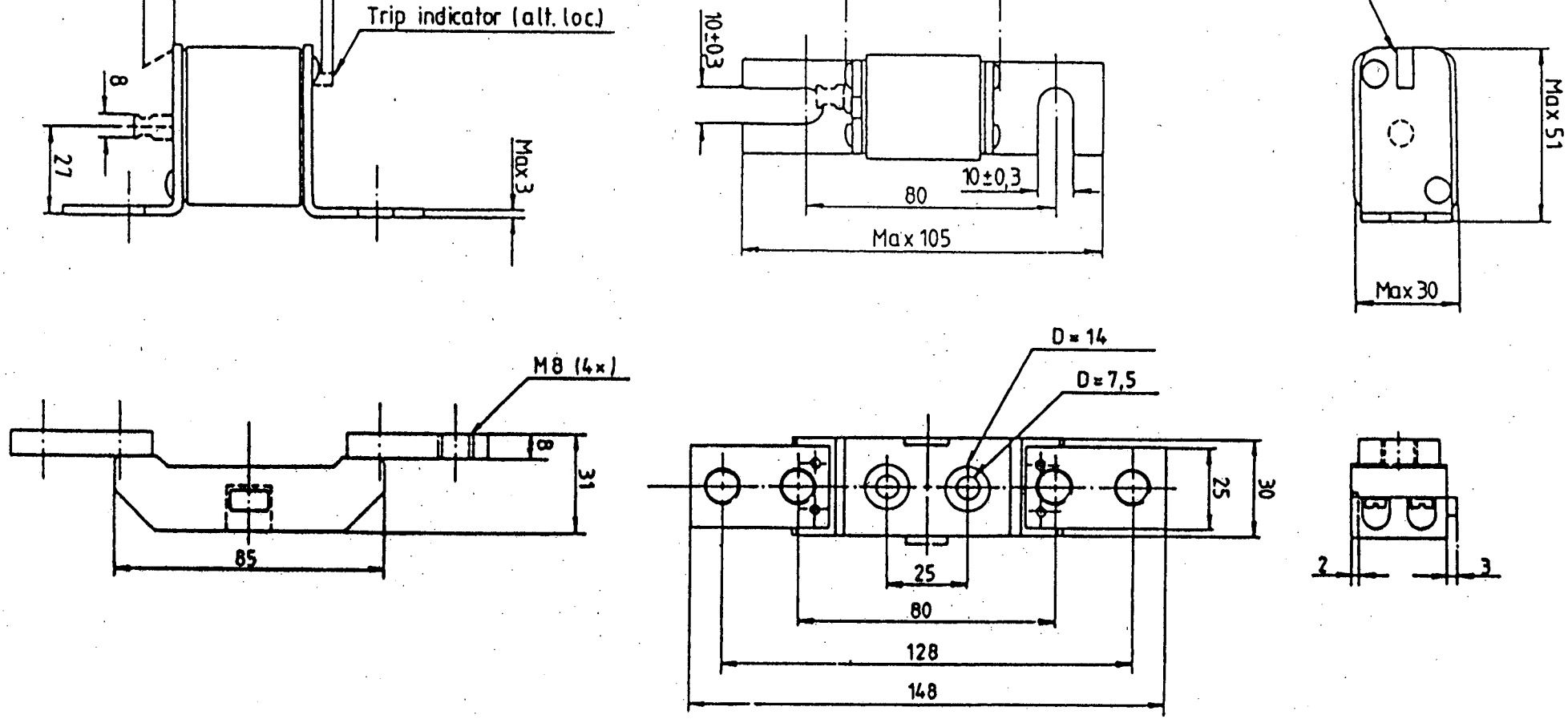

Semiconductor fuses and fuse holder

DIMENSIONS 170-530 A

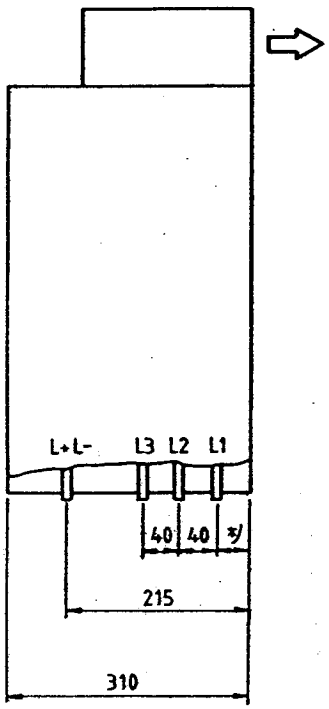

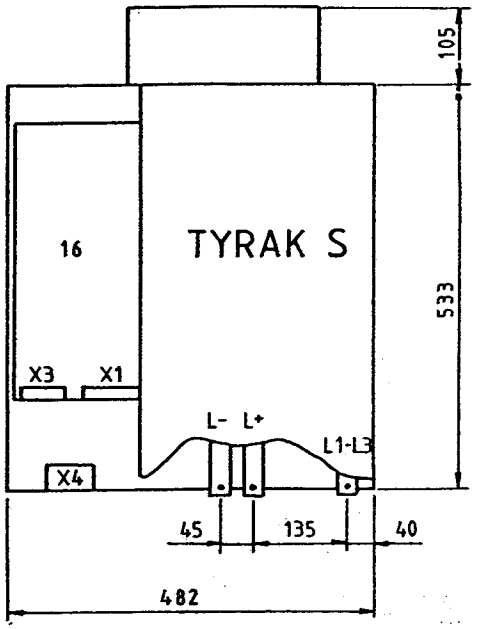

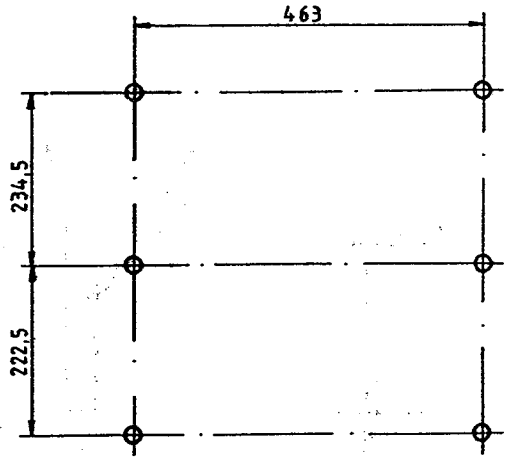

*) YGMM = 40
YHMM = 45

Weight = 40 kg

COMMISSIONING

SAFETY PRECAUTIONS

Danger to personnel

The voltage to the convertor is to be switched off when work is being performed in which contact can be made with parts carrying voltage.

- Do not work alone when commissioning the equipment.
- Notify persons working near the machine that it can start without warning.

Danger to equipment

Stationary machines without connected field may not be loaded for more than 10 secs at a time. The current is not to exceed the rated value and between each load, the rotor must be turned so that the same segments in the commutator are not loaded repeatedly.

EQUIPMENT REQUIRED

2 Multimeters 0 - 1000 V d.c. and a.c..
$R_i \geq 10$ kohm/ V d.c.. One of the instruments can be of the digital voltmeter type.

1 Set of test leads with contacts of "EZ MINI HOOK" type

1 Potentiometer 10 kohm ≥ 0,5 W for setting references.

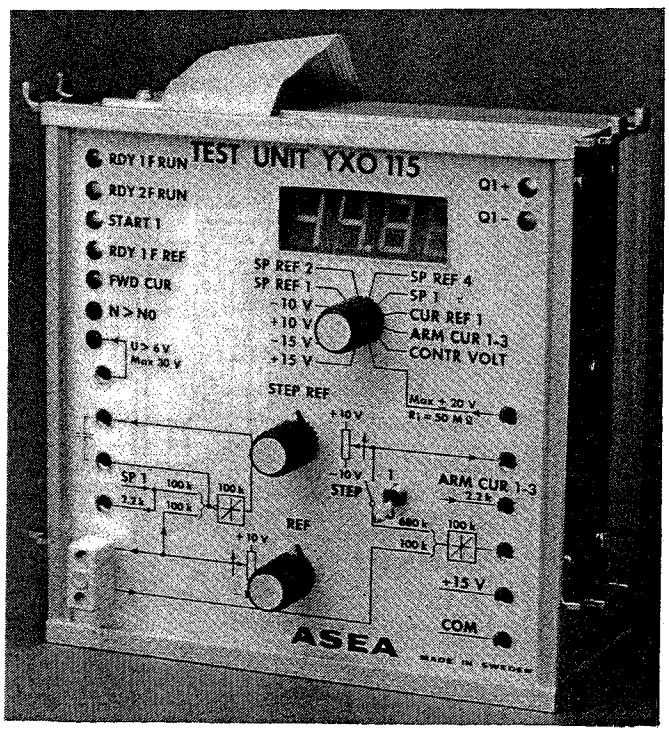

Fig 1 Test unit YXO 115 (800964)

N.B! The convertor is prepared for connection of test unit YXO 115, which is recommended both for commissioning and fault tracing. YXO 115 has built-in potentiometers for reference generation and a digital voltmeter for measurement of all important signal voltages. This replaces one of the multimeters otherwise required.

RECOMMENDED SEQUENCE OF OPERATIONS, CHECK LIST

☐ a. Check the mains connection and the connection of the d.c. machine, rotor, field and tachometer.
- Check that the transformers for the electronics supply are connected for the supply voltage to be used
- Check that the board is jumpered for the correct frequency.
  50Hz S7:1-2, 5-6 and 9-10
  60 Hz S7:3-4, 7-8 and 11-12
- Check that start capacitor 38 has the correct value when connecting 170-530A convertors to a 60 Hz mains.
- Check and set any external overload protection.
- Check the jumperings and make suitable presettings of the trim potentiometers.
- Adjust the current actual value to the current rating of the motor.
- Connect the reference unit (speed reference).

☐ b. Check the polarity reversal (double convertors only).

☐ c. Trim the current regulation (without field).

☐ d. Connect the field and check the field current.

☐ e. Trim the speed regulation with voltage feedback.
- Adjust voltage or tachometer feed-back on jumper connector S2.
- Check the direction of the machine rotation with the field connected.
- Set the final current limits.
- Trim the speed regulation statically and dynamically.

☐ f. Trim the IR compensation (with speed regulation by means of voltage feed-back).

☐ g. Set the ramp-unit.

INSTRUCTIONS, BY FUNCTIONS

Check and presetting

Make the following checks:

- Check that the convertor is connected to the correct mains voltage and that this is within +/– 10% of the nominal value.
- The convertor is assumed to be connected to the mains via an external contactor which connects/disconnects all voltage. The expressions "SWITCH ON" and "SWITCH OFF" respectively are used in this document for these actions.
- Check that the rotor circuit, field circuit and tachometer are connected correctly.
- An external overload protection must be set. Overload protection should be provided for the convertor fan, for the main convertor circuit andfor a fan if included.
- Check the most important jumpers on the circuit board YXT 121 with the assistance of the circuit diagram.

Make the following preliminary settings:

- "LEV" (R42)
  Signal level adjustment: Turn to the extreme anticlockwise position.
- "LIM 1" (R13)
  Positive current limit: With single convertor (YGMM), turn to 0, i.e. the extreme anti-clockwise position. With double convertors (YHMM), set at 25 % reading approx.

  When an external potentiometer is used, jumper S7:13-14 is to be removed and the potentiometer on the board turned to its extreme anticlockwise position.
- "LIM 2" (R16)
  Negative current limit: Set at 25 % scale reading. When an external potentiometer is used, the jumper S7:16-17 is to be removed and the potentiometer on the board turned to its extreme anticlockwise position.
- "PHASE LEAD" (R140)
  Derivating input for speed-actual value. Turn to extreme anticlockwise position.
- "SIGN ADJ" (R7)
  Adjustment of speed-actual value. Turn to extreme clockwise position.
- If the convertor acceleration circuit (RDY F REF) is connected to an external release switch, this can be short-circuited temporarily during the commissioning by inserting the jumper S3:3-4.

  Ensure that the current is zero when "SWITCH OFF" is performed with a double convertor.

Perform a final adjustment as follows:

- "I" (R79)
  Adjustment of I-actual value: Rotate from one end position to the other and note the anticlockwise end position in the screw driver slot. Turn then this slot to the scale value (4 - 10) which corresponds to the rated current of the motor (in amperes) in accordance with the diagram, figure 3.

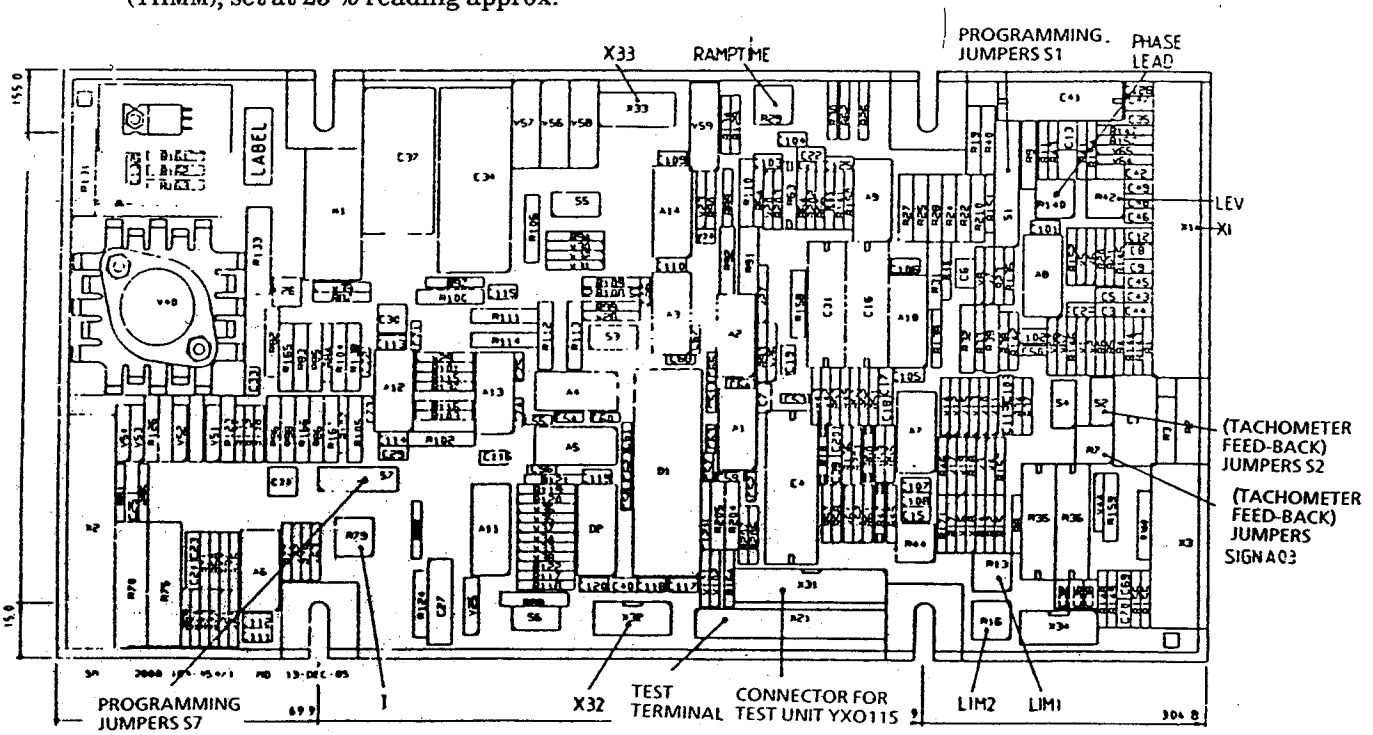

Fig 2 Control board YXT 121 (A, B)

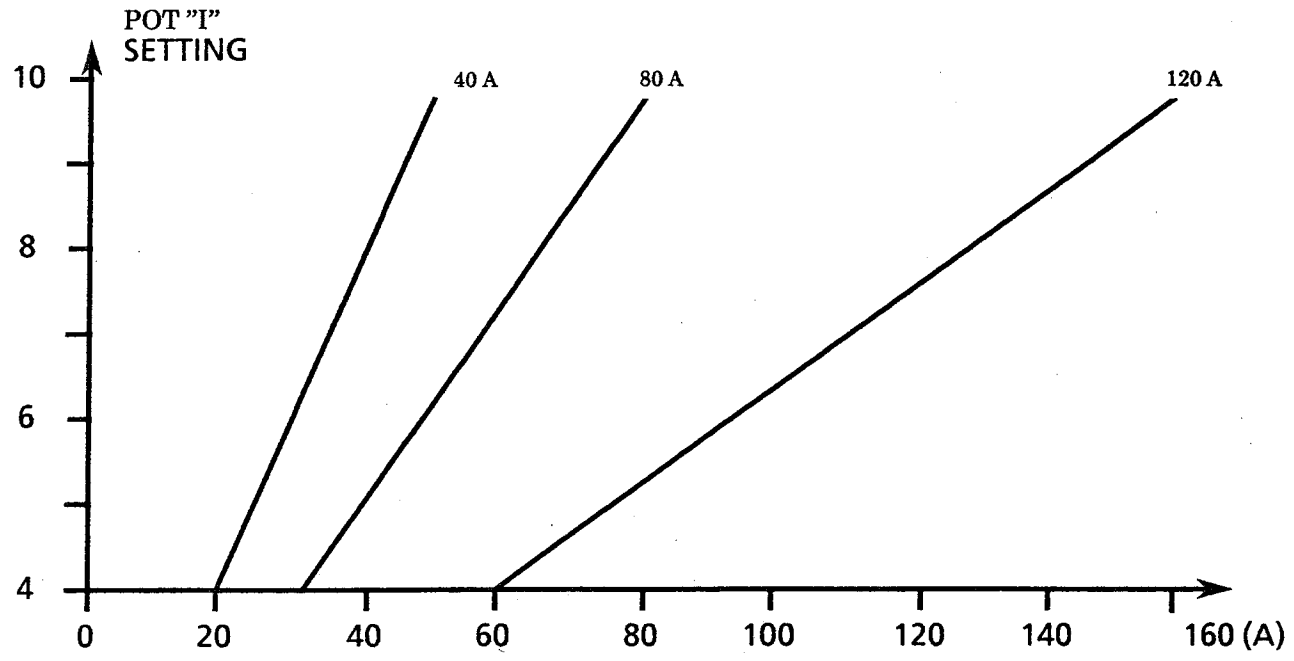

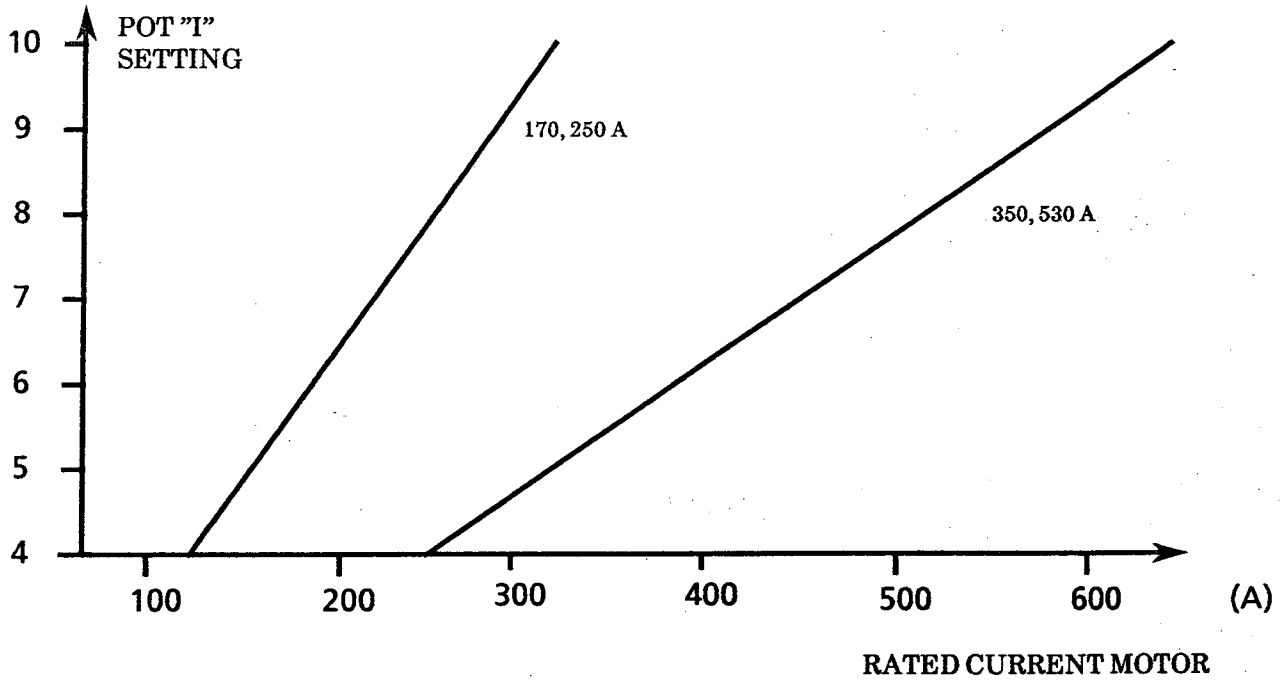

Fig 3

The purpose of this setting is to ensure that the current actual value "ARM CUR 1" (X21:3) is 5,0 V with the rated current of the motor.

- Connect the reference generator: For reference generation, a variable d.c. voltage (−10 V - 0 V - + 10 V) is connected via an external potentiometer to a vacant input for speed reference, without using the ramp.

If necessary disconnect the external speed reference. Set the potentiometer so that 0 V is obtained as a reference at switch-on.

- When using the test unit YXO 115, connect the ribbon cable to the connector X31 on YXT 121.

Polarity reversal (Double convertor)

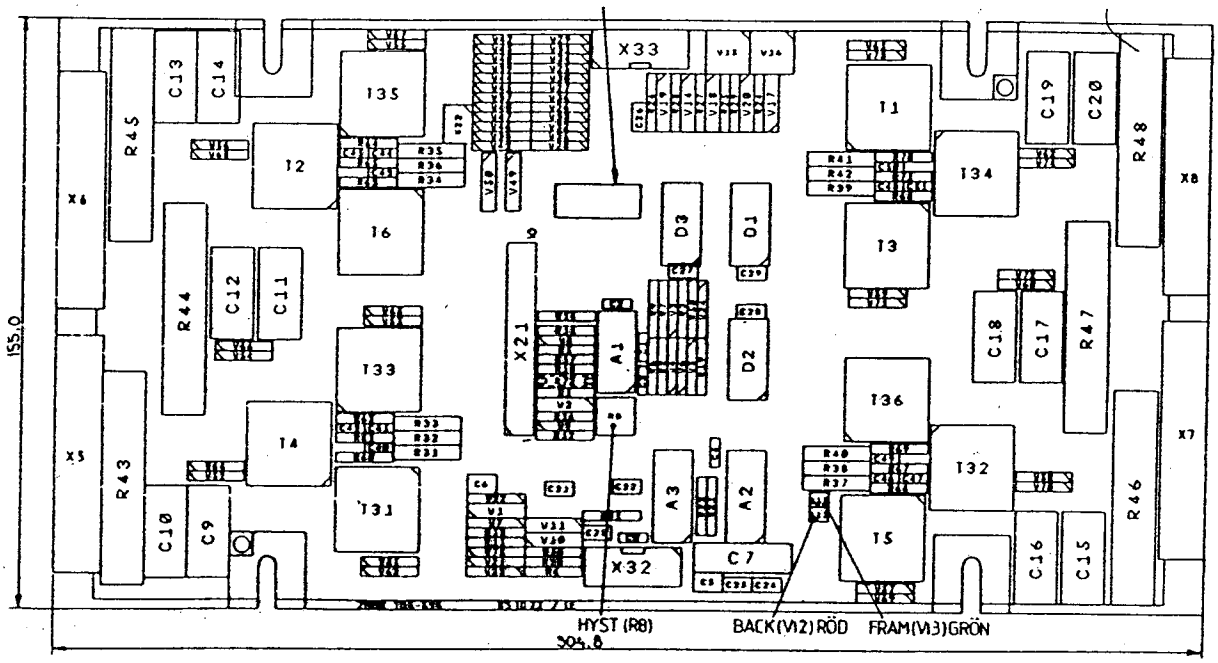

Fig. 4 Pulse transformer unit YXU157 (40-120A)

Polarity reversal (Double convertor)

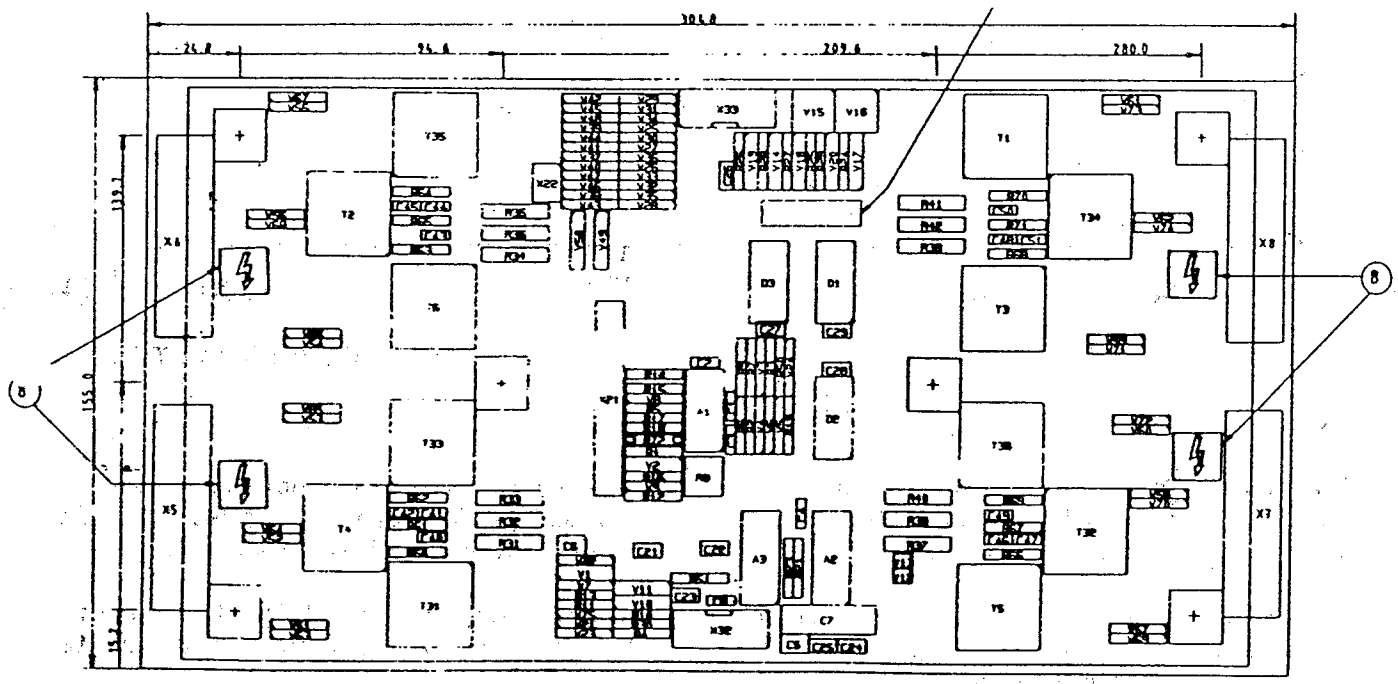

Fig. 4 Pulse transformer unit YXU 163 A (170-530A)

With a double convertor (YHMM), check that the current can go in both directions. Follow first the following procedures.

a. Disconnect the field.

b. Lock the machine rotor if necessary.

c. Proportional-connect the speed regulator by short-circuiting the capacitor C4 on YXT 121.

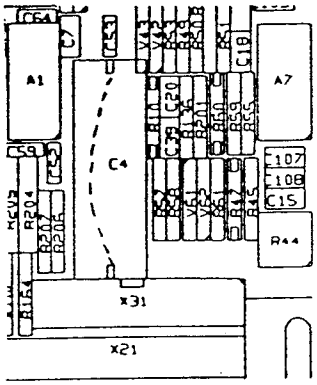

"SWITCH ON" the convertor and carefully vary the reference connected between positive and negative. Check that the convertor reverses polarity.

When using the test unit YXO 115 a visual indication of polarity reversal is obtained by activation and deactivation of the LED "FWD CUR".

Trimming of current control

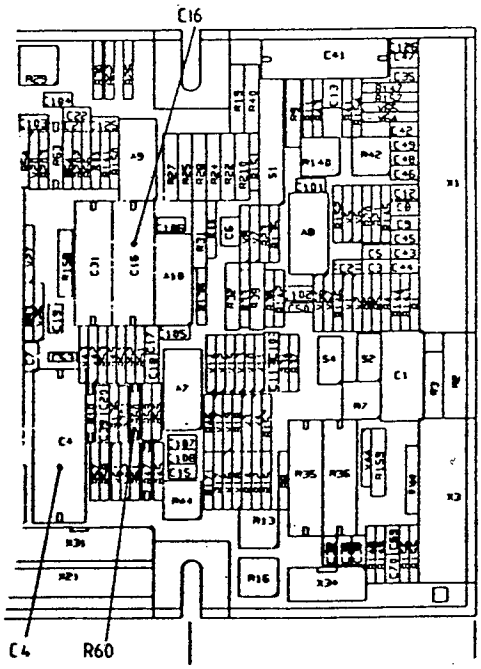

It is not normally necessary to trim the current control, except for the adjustment of the current actual value previously performed with pot "I" (R79).

For special requirements, the current control can be trimmed in the conventional way with steps in the reference and observation of the actual value of the current on a recorder.

For adjustment, the components R60 (P-section) and C16 (I-section) can be removed with a soldering iron as they are mounted on solder posts on YXT 121.

The following should be remembered during this trimming:

a. The field is to be disconnected and the field winding of the motor is to be short-circuited.

b. Lock the motor of the machine if necessary.

c. Reference is given via the speed regulator which is P- connected by short circuiting the capacitor C4.

d. Make small stepped changes of the reference in the range continuous current. For double convertors, one direction is selected. (Check that the convertor does not go to the current limit. It may be necessary to increase the current limit).

Connection and check of field current

The convertor is to be switched off.

Disconnect the trigger pulses to the thyristors by temporarily disconnecting the ribbon cable connector X33 from the circuit board YXT 121 (A,B).

Connect the field.

Introduce an ammeter in the field current circuit.

"SWITCH ON" the convertor and check that the values of field current and field voltage are correct. Note that the resistance in the field winding can increase by 40 % when the motor warms up.

If the current needs adjustment, this can be performed with an external serial resistance or by changing the incoming supply voltage.

"SWITCH OFF" the convertor and connect the ribbon cable contact X33 on YXT 121.

Speed control with voltage feed-back

It is assumed that the voltage feed-back is received via a voltage measurement unit. With the value 10,0 V for nominal voltage, the following jumpers are to be closed i.e. inserted S2:1-2, 3-4, 5-6, 7-8 and 9-10.

Turn the potentiometer "SIGN ADJ" (R7) to its extreme clockwise position.

When trimming, the procedures SPEED CONTROL WITH TACHOMETER FEED-BACK described below can be followed .

Speed control with tachometer feed-back

Approximate adjustment of tachometer feed-back

Calculate the maximum tachometer voltage using data from the tachometer and the highest speed. Adjust this voltage by jumpering in accordance with the table.

Tachometer voltage(V)	S2:				
	1-2	3-4	5-6	7-8	9-10
10-15	X	X	X	X	X
14-24	X	X	X	X	–
22-52	X	X	X	–	–
40-120	X	X	–	–	–
90-320	–	–	–	–	–

(X = jumper inserted, – = no jumper)

If two ranges can be selected, the range for the highest voltage is to be selected.

The speed regulation is trimmed as follows.

a. Remove any locking of the rotor of the machine.

b. Check that the potentiometer "GAIN" (R44) is at its maximum anticlockwise position.

c. Set the external reference potentiometer to give a speed reference value of approximately 0 V.

d. The speed regulator is assumed to be P-connected in accordance with section TRIMMING OF CURRENT REGULATION.

Preliminary check of controllability

"SWITCH ON" the convertor and check that the motor does not begin to race. Be prepared to "SWITCH OFF". Increase the speed reference slowly (to approximately + 5.0 V) and check that the motor begins to rotate without racing. If the motor races, i.e. accelerates to top speed, the tachometer feed-back or field supply is connected with incorrect polarity.

If the motor races in the correct rotation direction, the tachometer feed-back must be reconnected with the correct polarity. If the motor races in the incorrect rotating direction, the field supply polarity must be reversed. If the motor is controllable to all speeds with the reference potentiometer but rotates in the incorrect direction, the polarity of both tachometer and field supply must be changed.

With a double convertor, (YHMM) check that the motor is continuously controllable in both directions.

Current limit

It is now appropriate to set the final current limit. "SWITCH OFF" the convertor. Disconnect the trigger pulses to the thyristors by temporarily disconnecting the ribbon cable connector X33 from the circuit board YXT 121.

Connect a voltmeter to the current reference "CUR REF" (X21:6).

"SWITCH ON" the convertor and increase the speed reference to +10,0 V. Then adjust the potentiometer "LIM 2" (R16) so that the current reference is limited to a maximum permissible "current".

$$U_{X21:6} = 5 \cdot \frac{\text{Current limit}}{\text{rated motor current}} \text{ (V)}$$

In the case of double convertors, the speed reference is changed to – 10,0 V. Potentiometer "LIM 1" (R13) is then adjusted to the relevant current limit in the same way as for "LIM 2".

When the setting is completed, "SWITCH OFF" the convertor and reconnect the ribbon cable connector X33 of YXT 121.

Fine trimming of max. speed

Connect a voltmeter to the tachometer feed-back "SP 1" (X1:1). (When regulating the voltage, the motor voltage is measured).

Disconnect the P-connection of the speed regulator by removing the short-circuiting over the capacitor C4.

"SWITCH ON" the convertor and increase the speed reference slowly to +10,0 V. Check at the same time that the max. motor speed is not exceeded. Adjust the potentiometer "SIGN ADJ" (R7) so that a maximum speed is obtained.

For a double convertor, a check is made that the same speed is obtained in the opposite direction with the speed reference –10,0 V.

Trimming of speed control dynamics

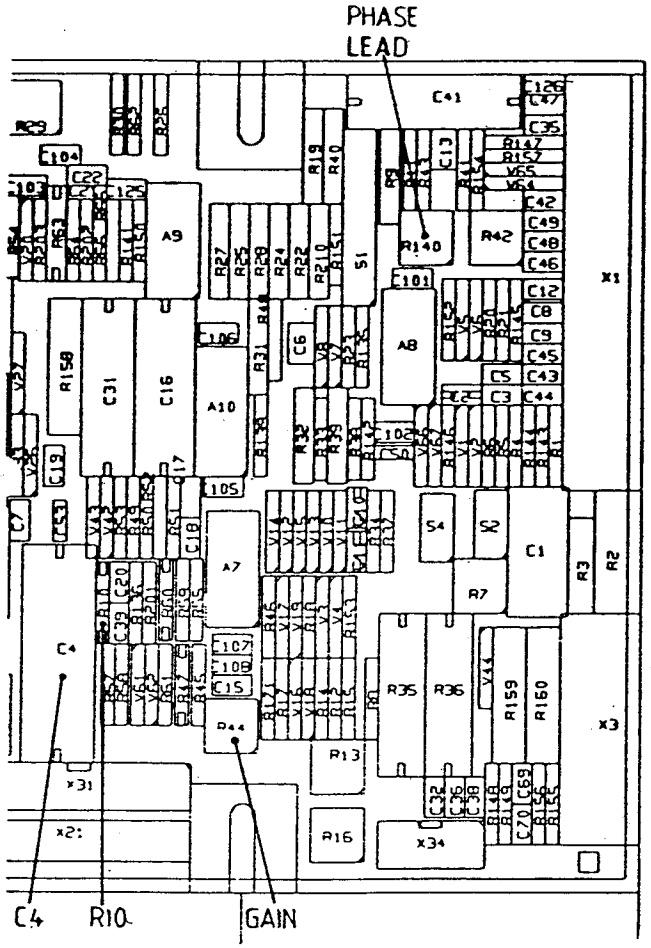

Connect an analog multimeter to the current reference "CUR REF" (X21:6). Select the measurement range 25 V d.c.

Set a speed of approximately 85 % of the maximum motor speed. Note that the motor is not to be loaded. Make a step in the speed reference so that the speed is changed from 85 % to 100 % and then back to 85 %.

Observe the indicator on the multimeter and change the reference rapidly. Check that the instrument needle returns to its original position without hunting. Repeat this stepping procedure for different values of "GAIN" in the speed regulator. Begin with the setting 0 % i.e. with the potentiometer "GAIN" (R44) at its extreme anticlockwise position. Increase then successively to 25 %, 50 %, 75 % and 100 % on the scale on the potentiometer until the indicator begins to hunt. Reduce the setting by 25 % from the gain setting at which the hunting begins, this being the final setting. Note that in certain operational circumstances, hunting can occur even with low gain.

If rapid regulation is necessary the speed control can be trimmed in the conventional way with stepped changes in the reference and observation of the speed actual value (or voltage actual value) on the recorder.

Large adjustments for the P-section (R10) and I- section (C4) can be made by soldering new components in place. These components are mounted on solder posts. To damp "overshoot", derivation in the actual value circuit can be introduced by turning the potentiometer "PHASE LEAD" (R140) in a clockwise direction.

On double convertors (YHMM) the hysteresis "HYST" (potentiometer R8 on YXU 163 A) is set at 50 % on delivery and normally needs no adjustment. If however the sensitivity of the pole reversal flip-flop, to changes in the current reference of the pole reversal flip-flop is to be changed, this can be done by reducing its hysteres for the level flip-flop. The pulse transformer unit YCU163 A is shown in Polarity reversal, (DOUBLE CONVERTOR), figure 4.

IR-compensation (with speed control with voltage feed-back)

On single convertors, IR-compensation can be introduced by connecting X1:6 and X1:15 on YXT 121 (E).

IR-compensation is trimmed as follows:

1. Speed up the motor to the rated speed.
2. Measure the no-load speed accurately.
3. Load the motor so that rated current is obtained (not current limit). The speed then drops slightly depending on the armature reaction and the armature voltage drop.
4. Adjust the potentiometer "LEV" (R42) so that the speed increases to the no-load value i.e. the rated speed.

   This trimming means compensation at rated speed. If compensation is required at another speed, the trimming is performed with respect to this.

Setting of ramp

If the speed reference is to go via the ramp, 15 V is to be connected to X3:4. The ramp unit can then be closed with this signal via an external switch. The jumpering is also to be checked. (see circuit diagram). The ramp time is set with the potentiometer "TIME" (R29) in the range 0,4 - 8,0 secs, for speed reference 0 - 10,0 V. If other ramp times are required, the capacitor C31 mounted on solder posts must be exchanged.

Value of C31	0,1/uF	1,0/uF	4,7/uF
Ramptime	40ms-0,8s	0,4-8 s	1,9-40s

FINAL PROCEDURES

Disconnect the variable speed reference used during the commissioning. If any external speed reference has been disconnected, this is now to be connected and jumpered correctly.

If external phase advance has been short circuited, with S3:3-4 on YXT 121 during the commissioning, this jumper is now to be removed.

If there are units for external reference generation, master control etc, these are to be set and trimmed.

Check that the drive equipment can be controlled as intended.

ighten all screws in all terminals to their correct tightness.

Check that any soldering has been performed correctly.

Check that the circuits boards are firmly screwed in place.

Make notes in the circuit diagram of any change of jumpers or components.

Make notes of all the levels set.

PREVENTIVE MAINTENANCE

GENERAL

The convertor contains no components subject to mechanical wear. The maintenance therefore mainly consists of preventive maintenance. In addition to the following check points, the convertor requires general maintenance to avoid interruption to operations.

This type of maintenance is common to all types of electrical equipment and can therefore be considered sufficiently well established as a service routine.

CHECK POINTS

The convertor should be inspected at regular intervals. The frequency of these inspections is determined by the nature of the operation and environmental factors (vibration, dust, humidity).

The following points should then be checked:

- Fouling
- Connections
- Installation

Observe the risk of electric shock! Before work is begun in the convertor, check that the a.c. supply is disconnected.

Fouling

Cubicles in which foreign material has accumulated must be cleaned. Dust and similar fouling can be removed with a vacuum cleaner. Compressed air can be used to remove stubborn deposits but this should be free from condensation. Fouling, difficult to remove otherwise, can be removed with isopropyl alcohol (or a similar solvent) which may be blown dry with clean air.

A visual inspection should be performed after cleaning to detect any mechanical damage or components damaged by overheating.

Connections

Main circuits
Tighten all screwed cable and bar connections. Check bar joints and connections to thyristors and the high speed fuses on the thyristor unit.

Other circuits
Check the tightness of all screwed connections with a screwdriver (contactors, transformers, circuit boards, terminals, etc.)! Check that the circuit board connections are installed correctly.

Installation

Ensure that all units are screwed together firmly and that no screws or nuts are loose.

Check the circuit boards of the control equipment with respect to fixing and connections.

All plastic holders must be intact and the edge contacts must cover the pattern terminals as intended. Wiring is to be fixed to avoid chafing against sharp edges.

FAULT TRACING

SERVICE PRINCIPLES

Introduction

The Tyrak S convertor has a straightforward functional design with very few component units. The frequency of internal component fault is therefore very low once the convertor is operational.

Component fault

The components below are arranged in order of estimated fault frequency. The thyristor modules are the units most subject to component fault as they can be damaged by external effects.

- Thyristor modules
- Control board YXT 121
- Pulse transformer board YXU 162 (163)
- Rectifier bridge including varistors
- Connectors and cables
- Transformers

The above can serve as a primary guide for fault tracing in the convertor.

Personnel safety

When tracing faults it may be necessary to work with the supply voltage switched on. The Tyrak S convertors provide the highest possible degree of personnel safety by the galvanic isolation of the electronic circuits from the main circuit. There are no dangerous voltages on control board YXT121.

Note that on the board at the right, the pulse transformer board, YXU 156/157/162/163, certain parts carry the main voltage. The dangerous parts are located between the trigger pulse transformers and the trigger pulse connections X5, X6 (X7, X8).

Other parts of the board are galvanically isolated from the main voltage by the trigger pulse transformers and carry no dangerous voltage.

Great care must be observed when testing on this board.

All mains outlets of sifnificance for service on site are assembled on the control board YXT121.

Fault tracing routines

a. Determine if there is any electrical or mechanical fault in the drive equipment.

b. Check if any electrical convertor fault is internal or external.

c. In the case of internal fault:

- Localize the fault to, for example, a thyristor or a circuit board.
- Replace the faulty component with a spare.

d. Faulty circuit boards are to be repaired in an ASEA workshop.

Measurement instruments required

Test unit YXO 115

The convertor is prepared for connection of the test unit YXO 115. This unit is connected via a ribbon cable to the contact X31 on the control board. 19 important measurement points are connected at this contact.

The test unit YXO 115 (catalogue number YT 296 000-PG) is recommended as a rapid and certain means of checking signal levels and supply voltages in the control equipment without loss of time in identifying all measurement points.

YXO 115 can also be used for manual generation of references as it has integral potentiometers for both rough and accurate setting of references and selectors for a step function. Further information is available in Information YT 280-112 E.

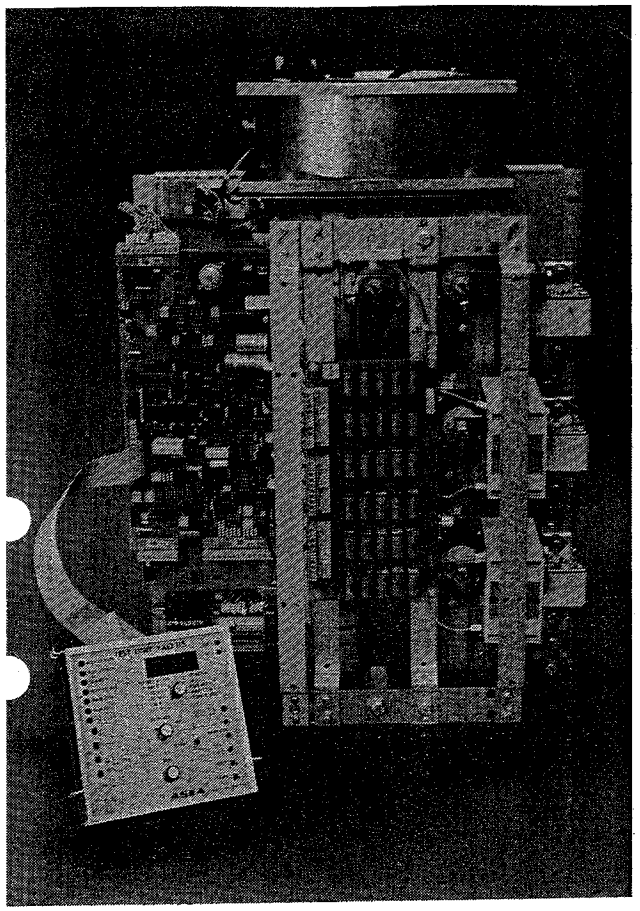

Fig 1 Three-phase convertor module, 170-530A and testing unit, YXO 115, (870486)

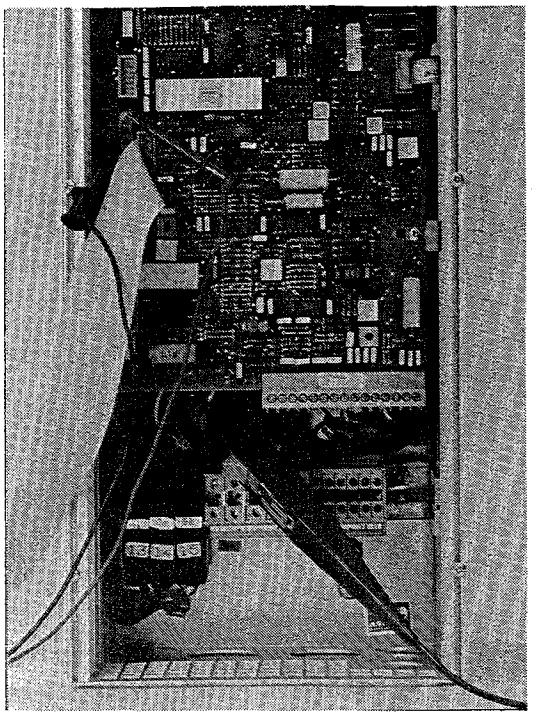

Fig 2 Connection to convertor module 40-120A,of different measurement instruments with ribbon cable, measurement clamps and current probe.(840207)

Multimeter

A multimeter is necessary for general fault tracing in the convertor.

In addition to the measurement contact X31 named above, a 10 pole measurement terminal, X21, intended for ordinary measurement clamps, is provided.

"Do it yourself" recommendation

An adapter for quick connection of a multimeter to the measurement contact X31 can be easily made with two 10 point selectors and a ribbon cable with a 26-pole female contact.

Printer, oscilloscope

In the case of certain faults and for detailed fault tracing, an oscilloscope and/or a recorder are necessary.

Current probe, personnel safety

A current probe is recommended as a supplement to the oscilloscope when measuring trigger pulses to the thyristors. The main advantages of the current probe are the potential-free measurement which is possible without galvanic contact with the main circuit and the unequivocal measurement result obtained.

STANDARD FAULT TRACING ROUTINE

The following method should permit correction of 9 faults of 10 in drive equipment. The table should be followed point by point in the order given.

Prehistory	Discuss, with the operator, his observations when the fault developed.
Physical load on the motor	Can the motor be turned by hand? Turn the motor by hand if possible.
Motor damage	Is the commutator intact? Are the surfaces of the commutator smooth? Can the brushes move freely up and down and do they make good contact with the commutator? Are sparks generated at the commutator with current load? Are the tachometer and its connections serviceable?
Electric power interruption	Check the electric power distribution to the convertor and the cables between the convertor and the motor.
Excessive generation of heat in the convertor	Inspect the convertor for overheated components and brown discolouration on the electronic boards.
Faulty thyristor	Is any of the thyristors short-circuited in the forward or reverse direction? Check by means of resistance measurement.
Speed reference	Is the speed reference missing? Is the external superior control equipment faulty?
External control system	Does external supervision prevent phase advance of the convertor? Attempt to switch-on the convertor manually. Perform manual phase advance and reference generation.
Settings on circuit boards	Check the setting of the potentiometers and the programming jumpers.

TEST UNIT YXO 115

Connection

The test unit is to be connected, via the ribbon cable supplied, to contact X31 on the control board YXT 121.

LED functions

The significance of the illumination of LEDs is as follows:

Q1+	+24 V d.c. (unregulated voltage)
Q1–	–24 V d.c. (unregulated voltage)
START 1	Phase advance is activated
RDY 1F RUN	The mains-voltage has the correct phase sequence and the correct voltage
RDY 2F RUN	Undervoltage, incorrect phase sequence or phase failure
RDY 1F REF	Both START 1 and RDY 1F RUN are activated
FWD CUR	Current in the forward direction with a double convertor YHMM (not activated with single convertor YGMM)

Rotary selector functions

The following voltages can be checked with the rotary selector and read on the integral digital voltmeter. For signal levels, see section SUMMARY OF MEASURED VALUES.

+10 V	Reference voltage
–10 V	Reference voltage
+15 V	Regulated supply voltage
–15 V	Regulated supply voltage
SP REF 1	Reference via terminal X1:2
SP REF 2	Either reference via terminal X1:3 or output signal from the ramp generator
SP REF 4	Reference via terminal X1:4
SP 1	Speed actual value (tachometer signal)
CUR REF 1	Current reference (output signal from the speed regulator)
ARM CUR 1-3	Current actual value
CONTR VOLT	Control voltage (output signal from the current regulator)

FAULT SYMPTOMS AND SOURCES OF ERROR

Fault symptoms	Indication	Probable source of error
The motor does not rotate		• Supply voltage absent • Supply voltage to the electronics boards absent • phase advance signal absent • Field current too low • Interrupt between convertor and motor • Excessive loading torque on the motor • Speed reference absent • Current lim "LIM 1" and "LIM 2" set incorrectly • Current actual value potentiometer "I" is set incorrectly • Interrupt in thyristor • Control board YXT 121 is faulty • Pulse transformer board is faulty
	Red LED active -"- -"-	• Incorrect phase sequence • Undervoltage • Phase loss
Motor speed incorrect but controllable		• Faulty tachometer generator • Voltage divider for speed actual value is incorrectly adjusted (SIGN ADJ) • Faulty speed reference • Control board YXT 121 is faulty
The motor races		• Incorrect polarity of the speed actual value • Speed actual value absent • Incorrect polarity of the field supply • Control board YXT 121 is faulty
The motor rotates in one direction only (applies to YHMM)		• The speed reference has one polarity only • The pulse transformer board YXU 163 is faulty • Interrupt in cable connections to the pulse transformer board • Control board YXT 121 is faulty
Abnormal noise from motor, commutation malfunction		• Trigger pulse absent • Faulty thyristor
The semiconductor fuses trip at switch-on		• Short-circuited thyristor • Short-circuit/earth fault in the rotor circuit • Fault in current measurement circuits (current transformer or current actual value setting "I") • The control board YXT 121 is faulty • The pulse transformer board is faulty
The semiconductor fuses trip during operations		• Defective thyristor • Defective motor or earth fault • Unstable current control • Intermittent fault on the control board YXT 121 • Intermittent fault on the pulse transformer board • Setting of potentiometer GAIN on the control board YXT 121 is too high
Inadequate torque. The motor cannot reach the speed set.		• Field current too low • Armature current too low • Motor defect • Torque load excessive

SUMMARY OF MEASURED VALUES

Measurement with multimeter

Measurement point on the control board YXT 121	YXO 115	Signal Designation	Measured values		Remark
			YGMM	YHMM	
X21: 1	x	+15 V	+14,5 - +15,5 V DC	+14,5 - +15,5 V DC	Regulated
X21: 2	x	COM	0 V	0 V	
X21: 3	x	ARM CUR 1	0 - +10 V DC	0 - +10 V DC	1)
X21: 4	x	CONTR VOLT	−10 - +10 V DC	−10 - +10 V DC	2)
X21: 5	x	SP REF 1	0 - +10 V DC	−10 - +10 V DC	3)
X21: 6	x	CUR REF 1	0 - −10 V DC	−10 - +10 V DC	4)
X21: 7	x	SP REF 2	0 - +10 V DC	−10 - +10 V DC	3)
X21: 8	x	SP REF 4	0 - +10 V DC	−10 - +10 V DC	3)
X21: 9	x	RDY F REF	+14,5 - +15,5 V DC	+14,5 - +15,5 V DC	Phase advanced
X21: 9	x	RDY F REF	0 V	0 V	Phase advanced
X21:10	x	SP 1	0 - −10 V DC	−10 - +10 V DC	5)
X1 : 9	x	+10 V	+10,5 - +11,5 V DC	+10,5 - +11,5 V DC	Regulated
X1 :10	x	−10 V	−10,5 - −11,5 V DC	−10,5 - −11,5 V DC	Regulated
X2 : 1		L3 - L2	20 V AC	20 V AC	Mains voltage dependent
X2 : 2		L2 - L3	20 V AC	20 V AC	Mains voltage dependent
X2 : 4		L1 - L2	4 V AC	4 V AC	Mains voltage dependent
X2 :11	x	+24 V	+20 - +28 V DC	+20 - +28 V DC	Mains voltage dependent
X2 :12	x	−24 V	−20 - −28 V DC	−20 - +28 V DC	Mains voltage dependent
X2 :15	x	−15 V	−13,5 - −15,5 V DC	−13,5 - −15,5 V DC	Regulated
S6 : 7		−6,2 V	−5,9 - 6,5 V DC	−5,9 - 6,5 V DC	Regulated
S6 : 8		+6,8 V	−6,5 - 7,1 V DC	−6,5 - 7,1 V DC	Regulated

The table tabulates signals which can be measured with a multimeter during normal fault tracing.

The table also shows which of these signals can be measured directly with the test unit YXO 115. All signals are measured in relation to "COM" (X21:2).

1) The voltage is proportional to the d.c. (+5 V with the rated motor current is the setting prescribed).

2) The voltage is approximately proportional to the d.c. voltage.

3) The voltage is proportional to the speed reference. (Positive voltage with rotation in the forward direction.)

4) The voltage is proportional to the current reference. (Positive voltage with connection of the reverse bridge.)

5) Voltage proportional to the speed. (Negative voltage with rotation in the forward direction.)

Measurement with oscilloscope

The circuit diagram Appendices 1 - 5, contains oscillograms which illustrate the curve form at different test points on the circuit board. All signals are measured in relation to "COM" (X21:2).

If measurements are made in the thyristor bridge with the oscilloscope, use the voltage probe. Note that the chassis of the oscilloscope may become "live". All of the thyristor voltages (anode-cathode) can be measured on the connection bars L1, L2, L3, L+ and L−.

Use the current probe to check the trigger pulses as previously recommended under section MEASUREMENT INSTRUMENTS REQUIRED.

REPLACEMENT OF FAULTY UNITS

Circuit boards

The circuit boards are easy to replace as all of the electrical connections can be disconnected by removing the multi-pole board connectors of clip- on type. The compact design of the convertor requires however that the dismantling instructions be followed closely.

a. Disconnect the board contacts

b. Remove the circuit board as shown in fig. 3.

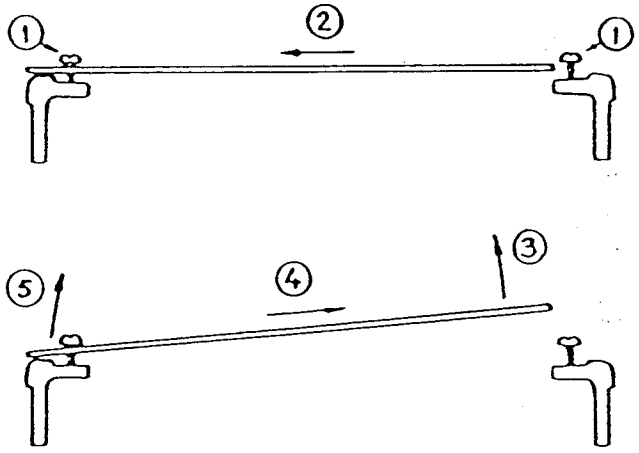

Fig. 3

1. Unscrew the fixing screws two turns
2. Push the board to the left
3. Lift the right side of the board
4. Push the board to the right into the wide groove in the aluminium section
5. Lift the complete board

c. Before the spare board is inserted, the following procedures are necessary:

- Check that the programming jumpers are located correctly by comparing with the original board and the circuit diagram.
- Set the potentiometers in accordance with the original board or follow the commissioning instructions.

Thyristors

a. ASEA's thyristor tester, catalogue number: YS 900 102-A is recommended for complete testing of thyristors.

The measurement of resistance with a multimeter is sufficient for demonstration of a short circuit in a thyristor.

b. When replacing thyristor modules it is important that the contact surfaces are thoroughly cleaned with a suitable solvent, then dried with a lint-free cloth and coated with a very thin layer of silicon grease.

c. The fixing screws are to be tightened alternately. The recommended tightening torque is 2.5 - 3.7 Nm.

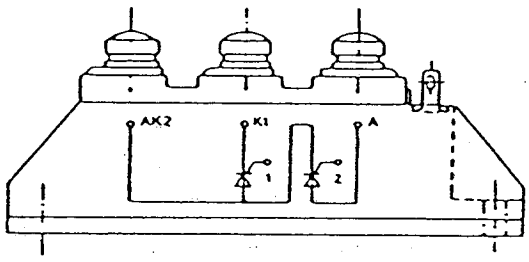

Thyristor module 40-120A

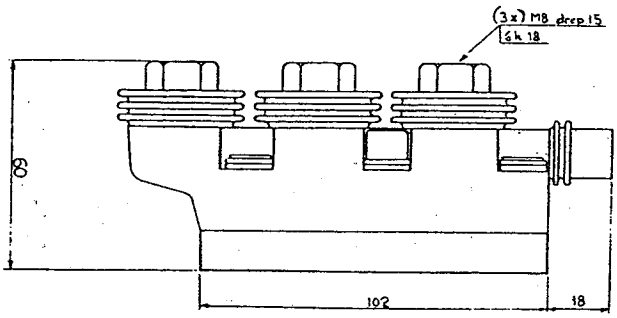

Thyristor module 170-530A

Fig. 4

WARNING!
Note that the casing of the thyristor module is not to be broken open as it can contain beryllium oxide, a dangerous material.

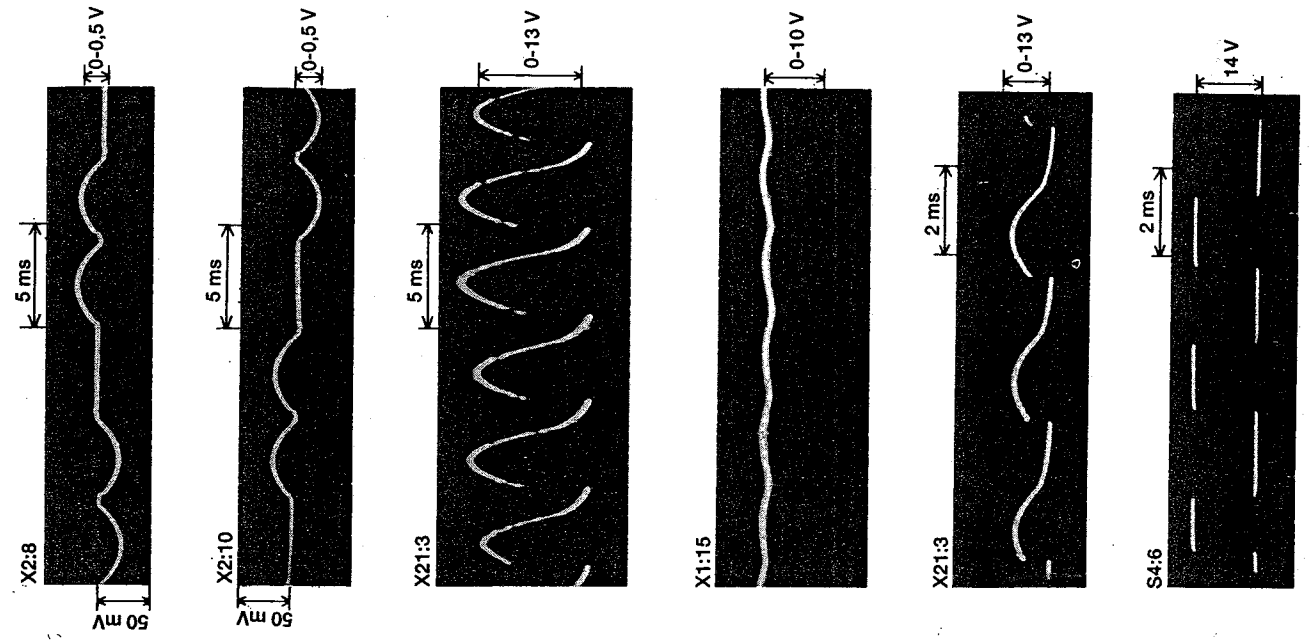
X2:8
5 ms
0-0,5 V
50 mV
X2:10
5 ms
0-0,5 V
50 mV
X21:3
5 ms
0-13 V
X1:15
0-10 V
X21:3
2 ms
0-13 V
S4:6
2 ms
14 V

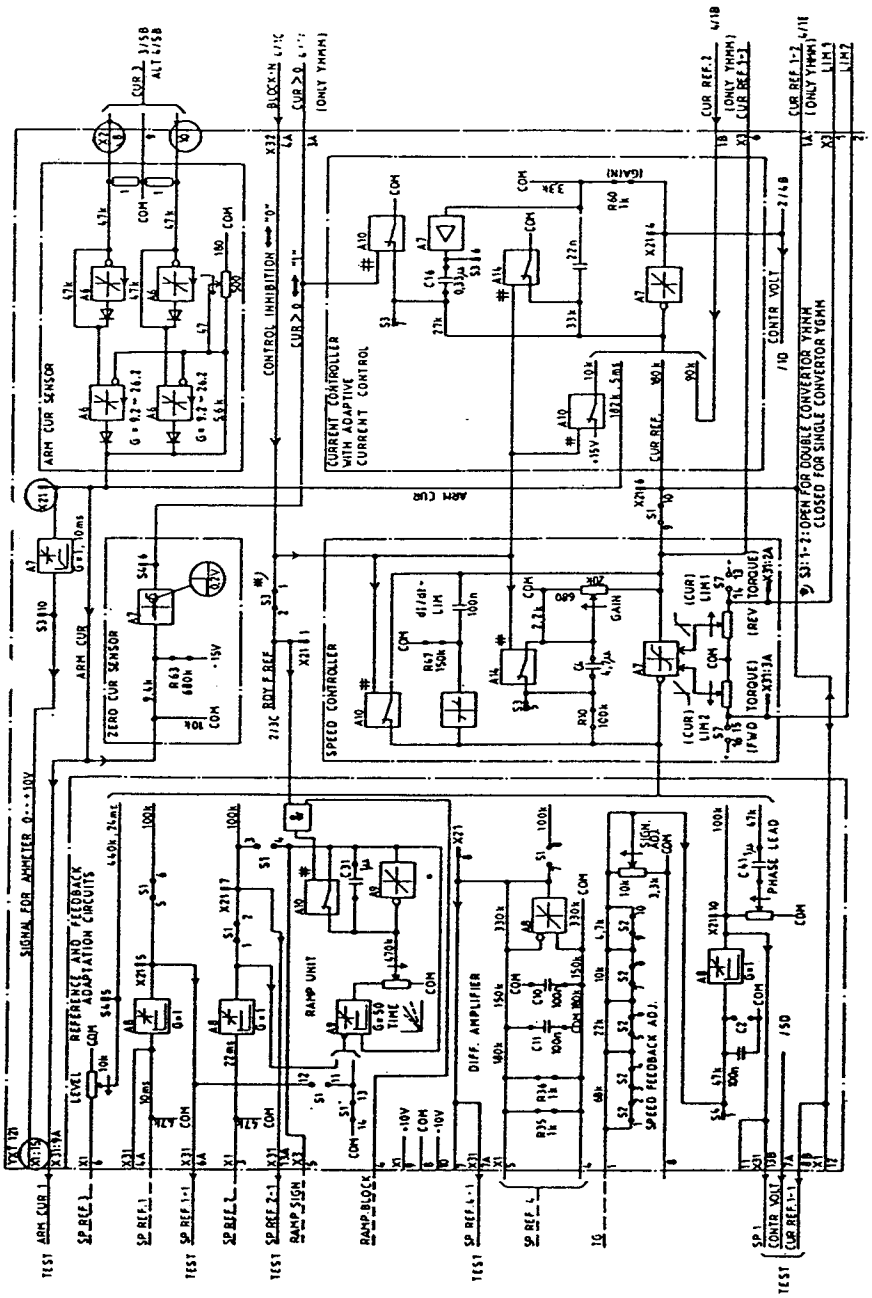
ARM CUR SENSOR
ZERO CUR SENSOR
ARM CUR
CURRENT CONTROLLER WITH ADAPTIVE CURRENT CONTROL
SPEED CONTROLLER
SIGNAL FOR AMMETER 0---+10V
REFERENCE AND FEEDBACK ADAPTATION CIRCUITS
RAMP UNIT
DIFF. AMPLIFIER
SPEED FEEDBACK ADJ.
CONTROL INHIBITION
CONTR VOLT
S3:1-2: OPEN FOR DOUBLE CONVERTOR YHMM
CLOSED FOR SINGLE CONVERTOR YGMM

Appendix 2

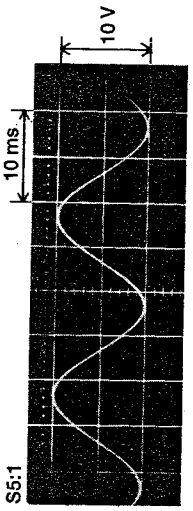
10 V
10 ms
S5:1

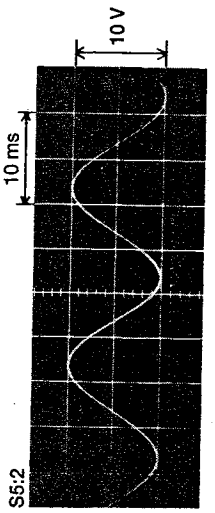
10 V
10 ms
S5:2

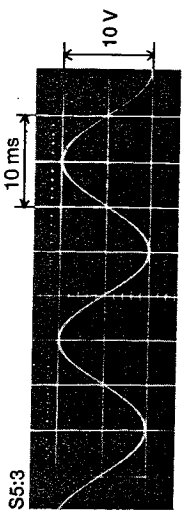
10 V
10 ms
S5:3

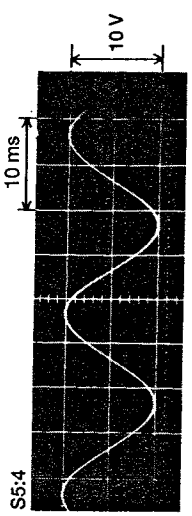
10 V
10 ms
S5:4

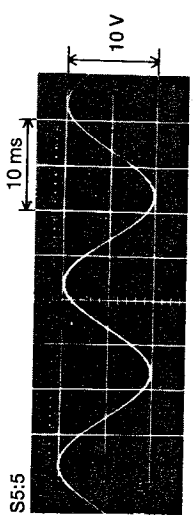
10 V
10 ms
S5:5

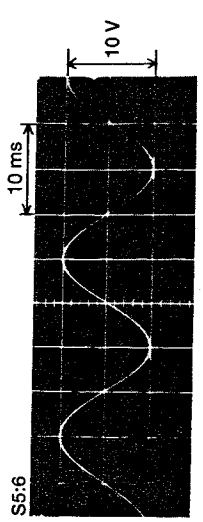
10 V
10 ms
S5:6

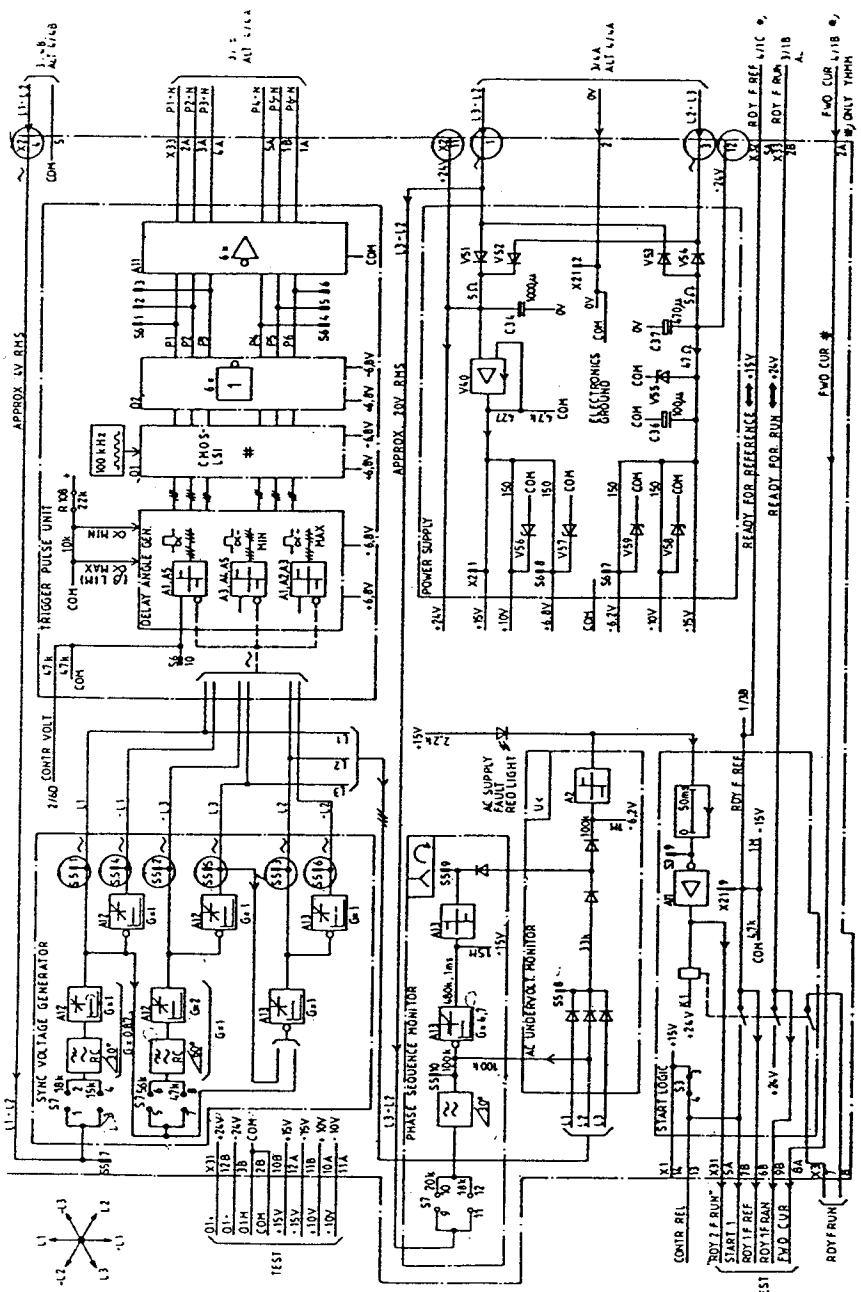
APPROX. 4V RMS
TRIGGER PULSE UNIT
DELAY ANGLE GEN.
CMOS LSI
100 kHz
SYNC VOLTAGE GENERATOR
PHASE SEQUENCE MONITOR
AC UNDERVOLT. MONITOR
AC SUPPLY FAULT RED LIGHT
START LOGIC
POWER SUPPLY
APPROX. 30V RMS
ELECTRONICS GROUND
READY FOR REFERENCE
READY FOR RUN
FWD CUR
CONTR. VOLT
CONTR. REL
TEST

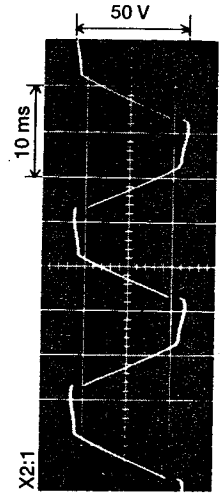
50 V
10 ms
X2:1

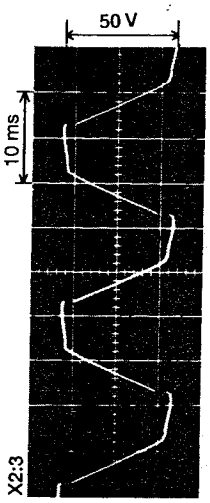
50 V
10 ms
X2:3

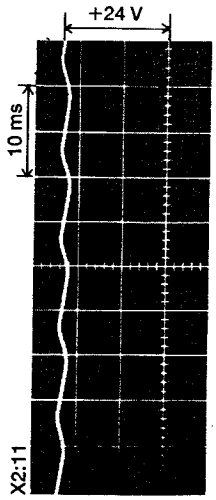
+24 V
10 ms
X2:11

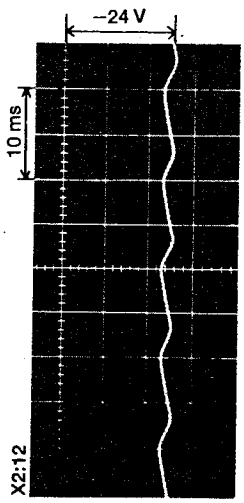
−24 V
10 ms
X2:12

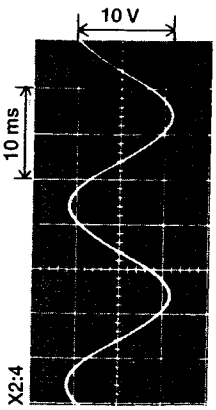
10 V
10 ms
X2:4

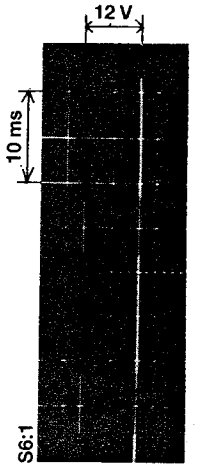
12 V
10 ms
S6:1

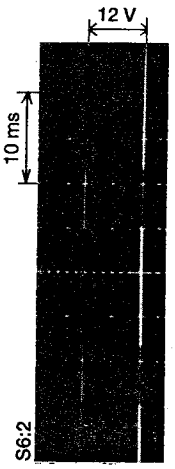
12 V
10 ms
S6:2

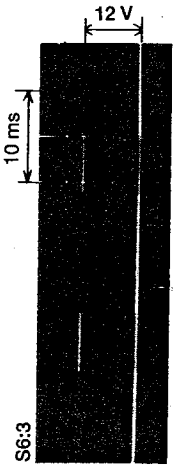
12 V
10 ms
S6:3

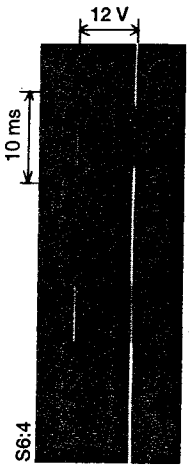
12 V
10 ms
S6:4

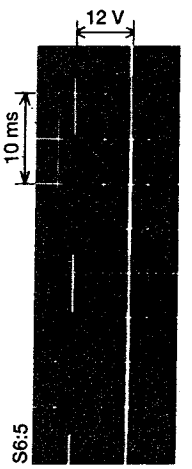
12 V
10 ms
S6:5

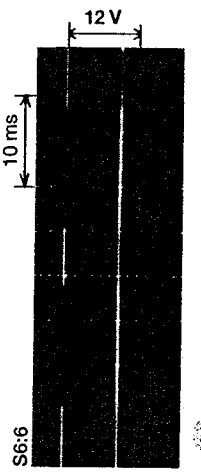
12 V
10 ms
S6:6

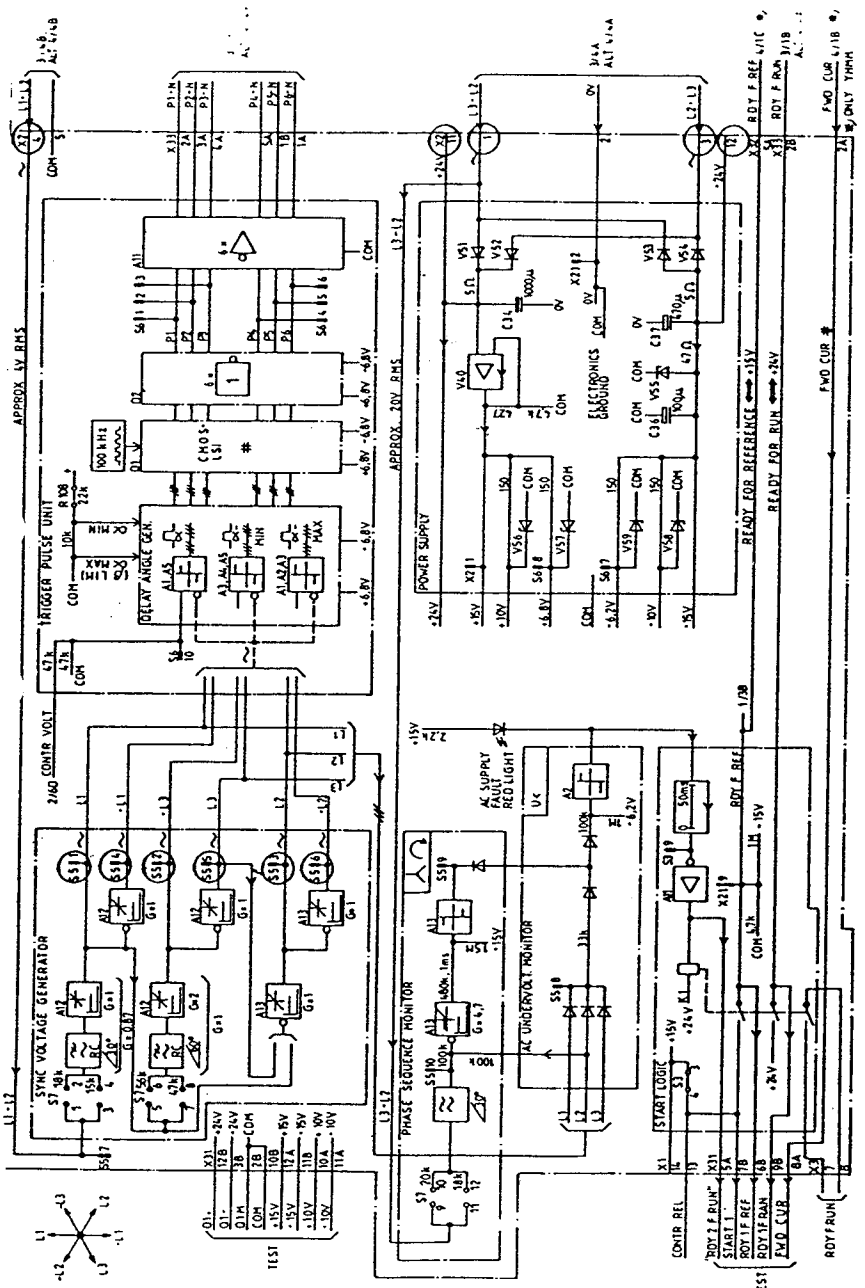
APPROX. 1V RMS
TRIGGER PULSE UNIT
DELAY ANGLE GEN.
CHOS-LSI
100 kHz
CONTR VOLT
SYNC VOLTAGE GENERATOR
APPROX. 70V RMS
POWER SUPPLY
ELECTRONICS GROUND
AC SUPPLY FAULT RED LIGHT
PHASE SEQUENCE MONITOR
AC UNDERVOLT MONITOR
START LOGIC
READY FOR REFERENCE
READY FOR RUN
FWD CUR
CONTR REL
RDY F RUN
TEST

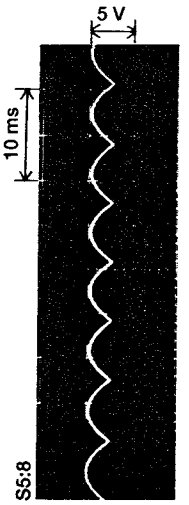
5 V
10 ms
S5:8

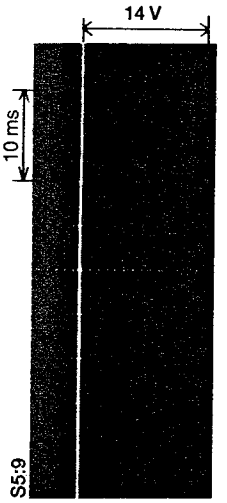
14 V
10 ms
S5:9

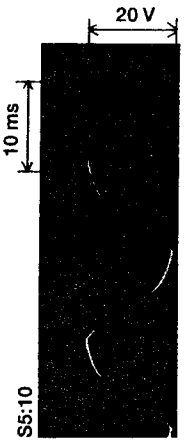
20 V
10 ms
S5:10

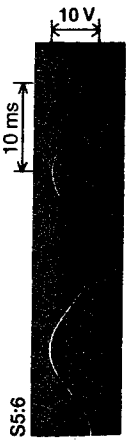
10 V
10 ms
S5:6

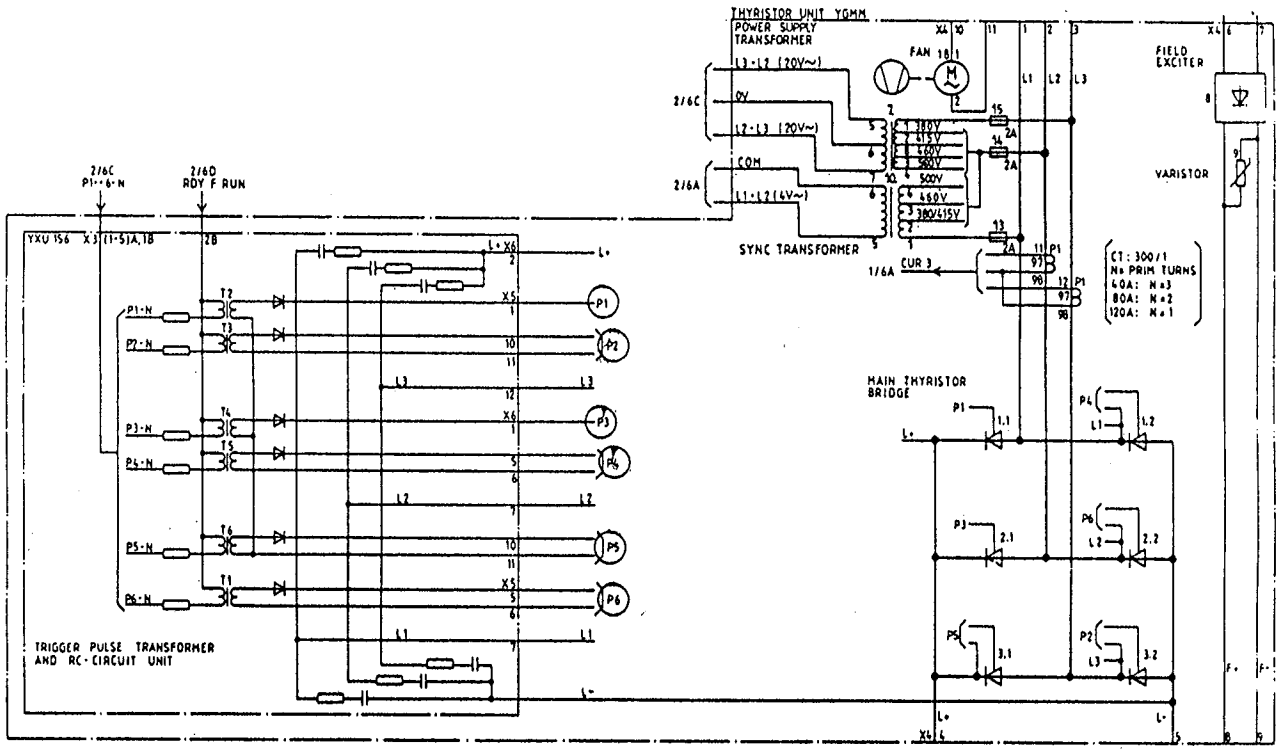

Measuring trigger pulses

P1-P6: Voltage probe

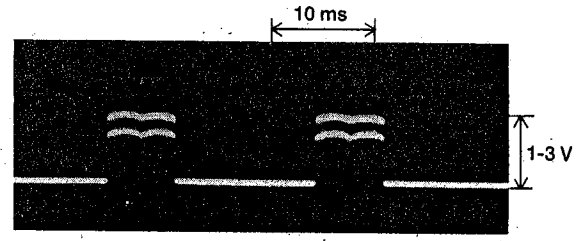

P1-P6: Current probe

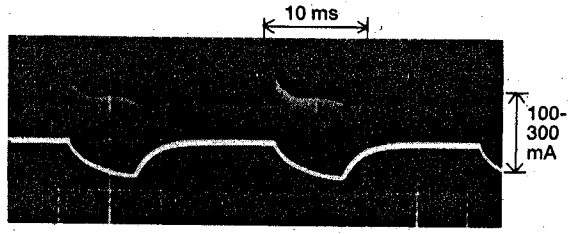

YGMM 40-120A

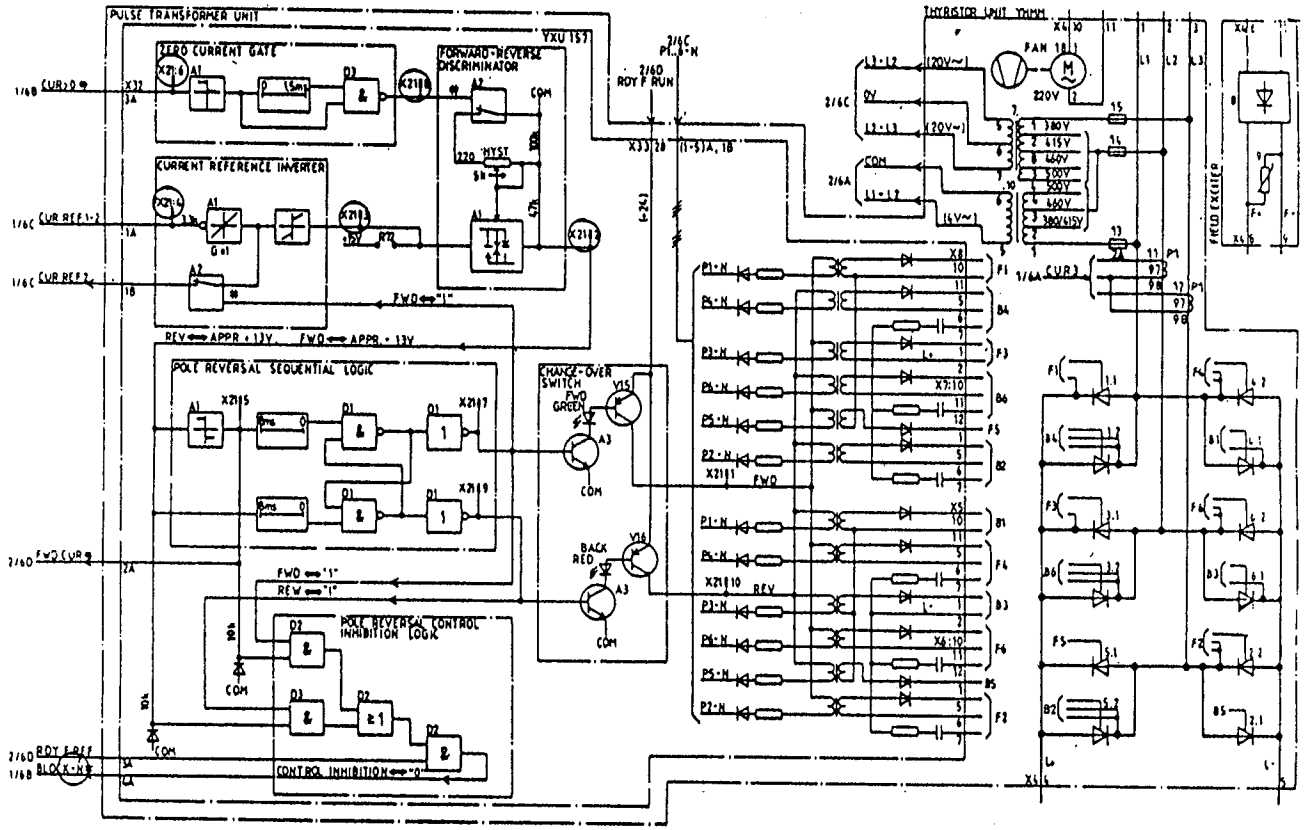
PULSE TRANSFORMER UNIT
YXU 157
ZERO CURRENT GATE
FORWARD-REVERSE DISCRIMINATOR
CURRENT REFERENCE INVERTER
POLE REVERSAL SEQUENTIAL LOGIC
CHANGE-OVER SWITCH
POLE REVERSAL CONTROL INHIBITION LOGIC
CONTROL INHIBITION
THYRISTOR UNIT YHMM
FAN
220V
FIELD EXCITER
CUR>0
CUR REF 1-2
CUR REF 2
FWD CUR
RDY F RUN
RDY F-REF
BLOCK-N
FWD
REV
COM

YHMM 40-120A

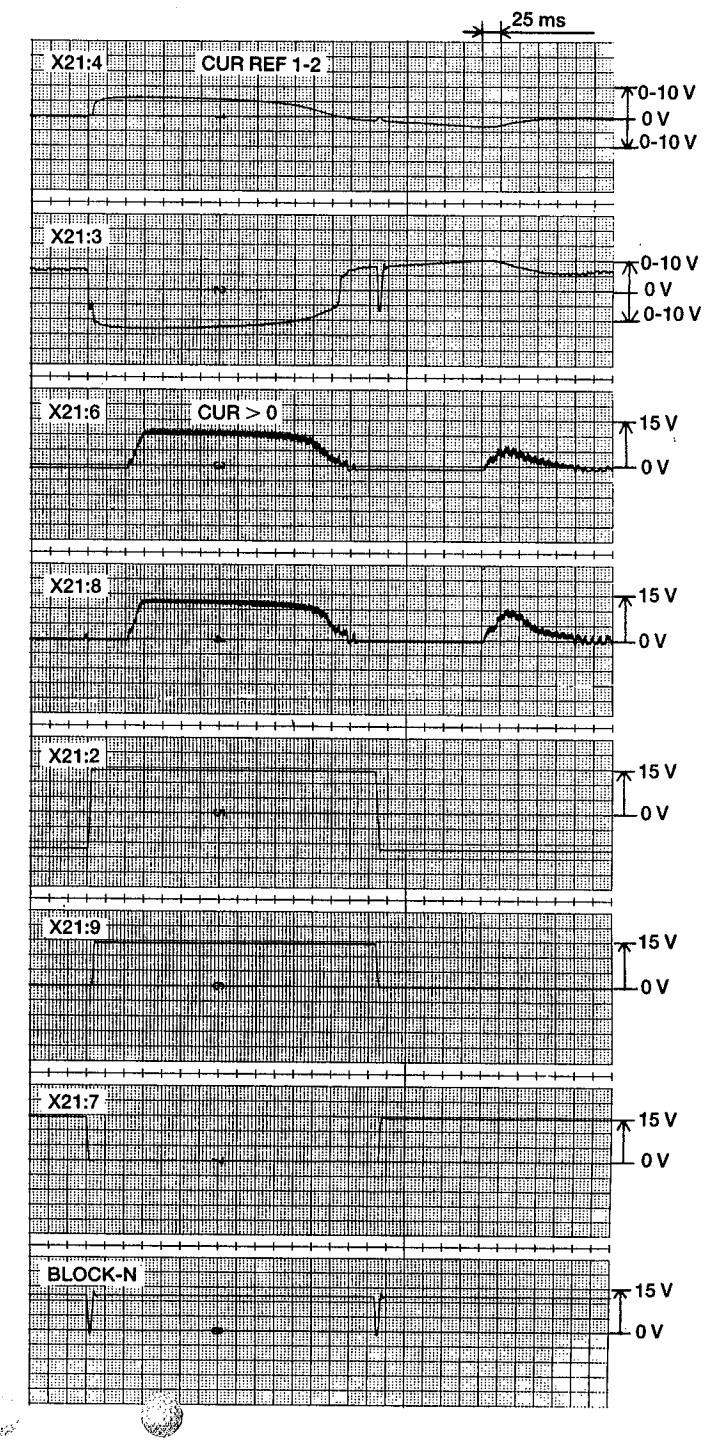
25 ms
X21:4
CUR REF 1-2
0-10 V
0 V
0-10 V
X21:3
0-10 V
0 V
0-10 V
X21:6
CUR > 0
15 V
0 V
X21:8
15 V
0 V
X21:2
15 V
0 V
X21:9
15 V
0 V
X21:7
15 V
0 V
BLOCK-N
15 V
0 V

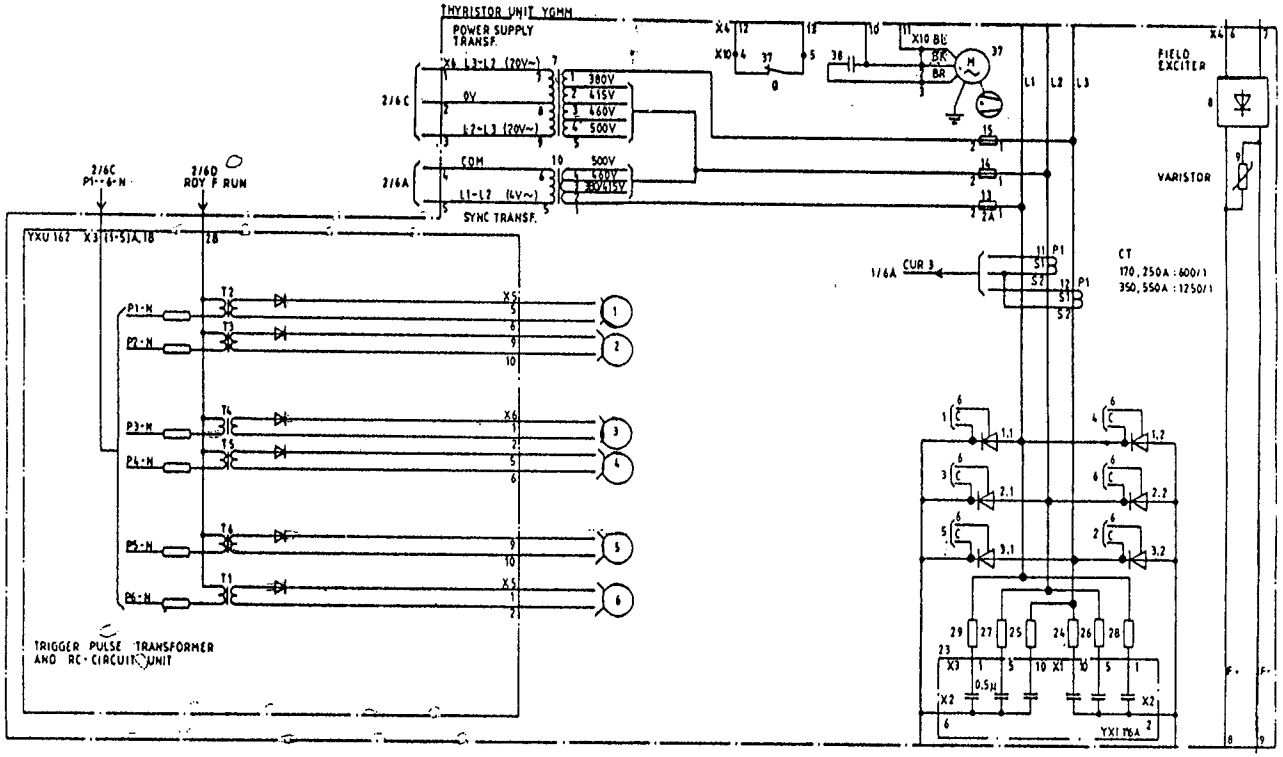

YGMM 170-530A

Measuring trigger pulses

P1-P6: Voltage probe

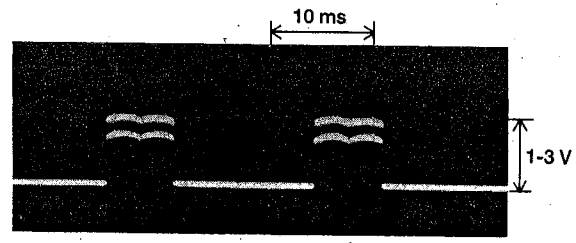

P1-P6: Current probe

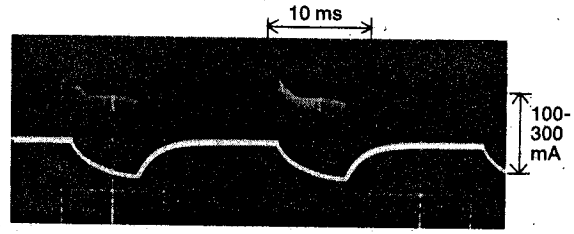

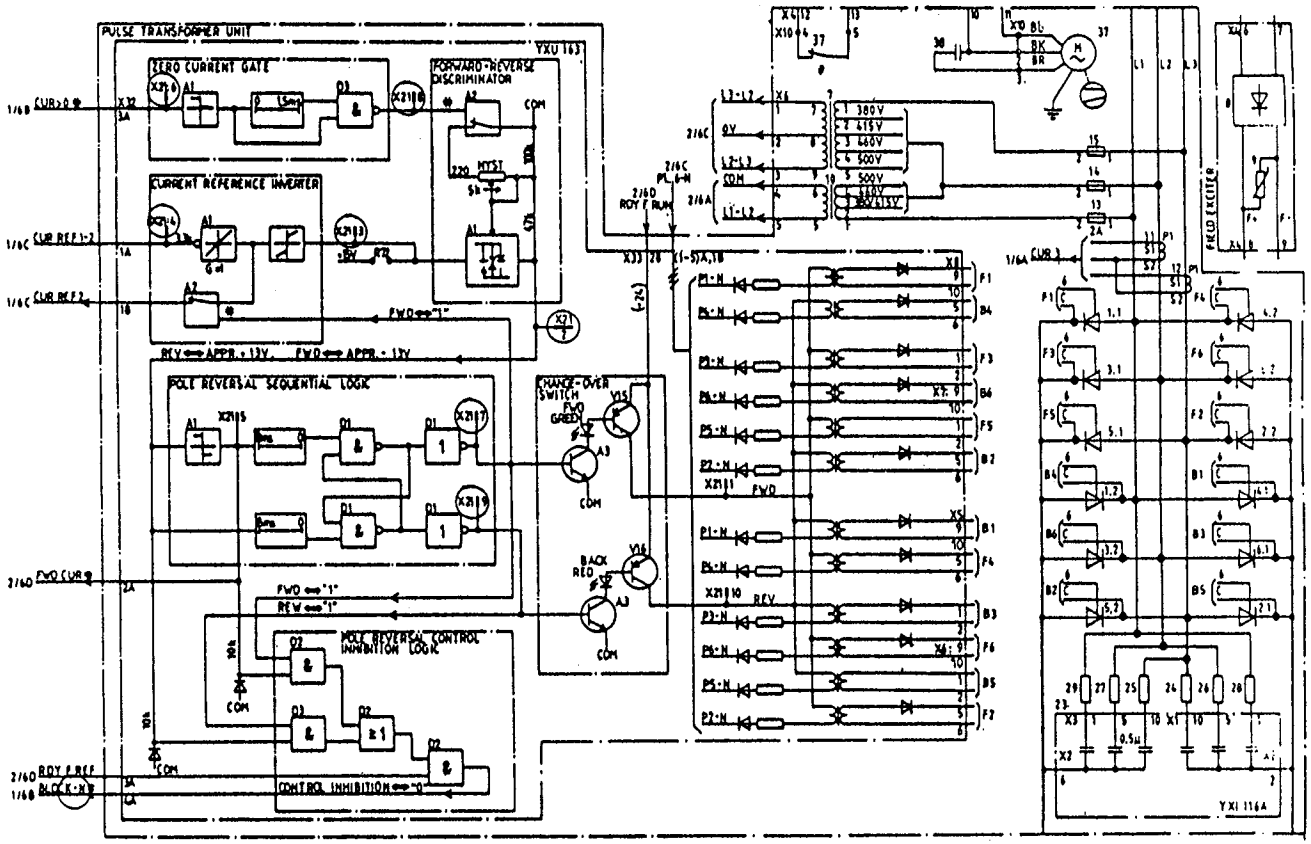

YHMM 170-530A

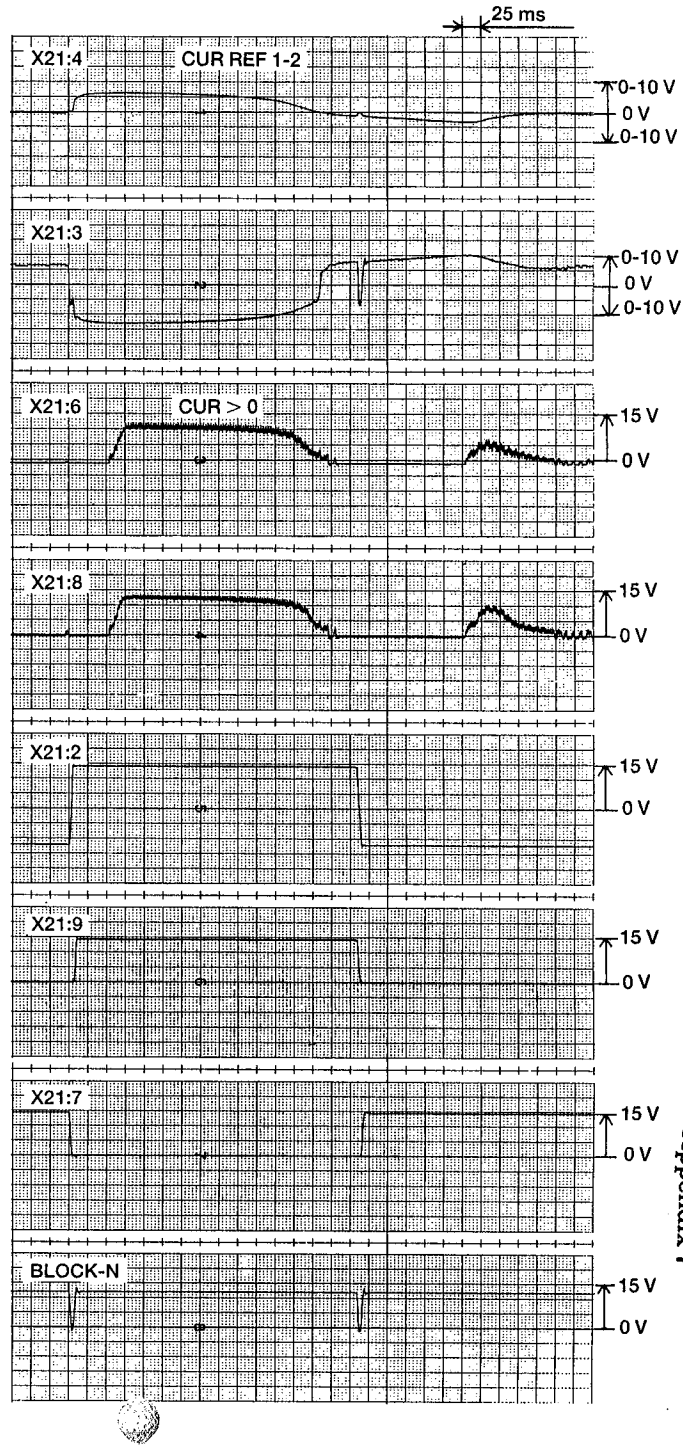

APPARATUS LIST

APPARATUS LIST YGMM ... - 40-530 A

Convertor type YGMM	U_{VN} V	Item	Number	Designation	Data	Cat.Nr
40	380-500	1,2,3	3	Thyristor module	18 A/1400 V	4858 233-16
80		1,2,3	3	Thyristor module	40 A/1400 V	4858 232-16
120		1,2,3	3	Thyristor module	90 A/1400 V	4858 234-16
170-350 A 530A	380-500	1-3	3	Thyristor module	YSTT 2-01 P18 YSTT 6-01 P18	YS 130 201-AH YS 150 201-AH
40-120		7	1	Transformer	SHMF 61 2x20 V, 16 VA	4783 340-B
170-530		7	1	Transformer	SLMF 85, 2x20 V 25 VA	4781 020-YH
		8	1	Field inverter	15 A/1400 V	4858 267-14
		9	1	Varistor	U_{RMS} = 480	5248 057-5
40-530		10	1	Transformer	SHMF 4V, 10 mA	4783 335-CV
40-120		11-12	2	Current transformer	300/1	4761 208-K
170-250 350-530		11-12	2	Current transformer	600/1 1250/1	4762 0318-8 4762 0304-17
		13,14,15	3	Fuse	500 V/2 A	5675 564-513
		16	1	Control board	YXT 121 E	YT 223 001-AT
40,80		17	1	Pulse transf. board	YXU 156 B	YT 223 001-AE
120		17	1	Pulse transf. board	YXU 156 A	YT 223 001-AB
170-530		17	1	Pulse transf. board	YXU 162 A	YT 223 001-AM
40-120		18	1	Fan	220 V/23 W	6480 096-3
170 250 350 530		18-20	3	Semiconductor fuse	160 A 250 A 315 A 450 A	5675 566 -415 -417 -418 -420
170- 530		23		Capacitor unit	YXI 116 A	YT 204 001-AN
170- 350		24-29	6	Resistor	15 Ohm 50 W	4893 1005-CX
530					6,8 Ohm 50 W	4893 1005-EF
170- 350		37	1	Fan		6480 305-11
530						6480 305-12
170- 350	50 Hz 60 Hz	38	1	Capacitor	4 µF 250 V 3 µF 250 V	4984 219-5 4984 219-4
530	50 Hz 60 Hz				6µF 250 V 5µF 250 V	4984 219-7 4984 219-6

APPARATUS LIST

APPARATUS LIST YHMM ... - 40-530 A

Convertor type YGMM	U_{VN} V	Item	Number	Designation	Data	Cat.Nr
40	380-500	1-6	6	Thyristor module	18 A/1400 V	4858 233-16
80			6	Thyristor module	40 A/1400 V	4858 232-16
120			6	Thyristor module	90 A/1400 V	4858 234-16
170-350 A 530A	380-500	1-6	6	Thyristor module	YSTT 2-01 P18 YSTT 6-01 P18	YS 130 201-AH YS 150 201-AH
40-120		7	1	Transformer	SHMF 61 2x20 V, 16 VA	4783 340-B
170-530		7	1	Transformer	SLMF 85, 2x20 V 25 VA	4781 020-YH
		8	1	Field recifier	15 A/1400 V	4858 267-14
		9	1	Varistor	U_{RMS} = 480	5248 057-5
40-530		10	1	Transformer	SHMF 4V, 10 mA	4783 335-CV
40-120		11-12	2	Current transformer	300/1	4761 208-K
170-250 350-530		11-12	2	Current transformer	600/1 1250/1	4762 0318-8 4762 0304-17
		13,14,15	3	Fuse	500 V/2 A	5675 564-513
		16	1	Control board	YXT 121 E	YT 223 001-AT
40,80		17	1	Pulse transf. board	YXU 157 B	YT 223 001-AF
120		17	1	Pulse transf. board	YXU 157 A	YT 223 001-AD
170-530		17	1	Pulse transf. board	YXU 163	YT 223 001-AL
40-120		18	1	Fan	220 V/23 W	6480 096-3
170 250 350 530		18-20	3	Semiconductor fuse	160 A 250 A 315 A 450 A	5675 566 -415 -417 -418 -420
170- 530		23		Capacitor unit	YXI 116 A	YT 204 001-AN
170- 350		24-29	6	Resistor	15 Ohm 50 W	4893 1005-CX
530					6,8 Ohm 50 W	4893 1005-EF
170- 350		37	1	Fan		6480 305-11
530						6480 305-12
170- 350	50 Hz 60 Hz	38	1	Capacitor	4 µF 250 V 3 µF 250 V	4984 219-5 4984 219-4
530	50 Hz 60 Hz				6 µF 250 V 5 µF 250 V	4984 219-7 4984 219-6