ABB Network Partner

REC 561 * 1.1
Control terminal

1MRK 511 009-BEN
Page 1
December 1997
Changed since October 1997
Data subject to change without notice

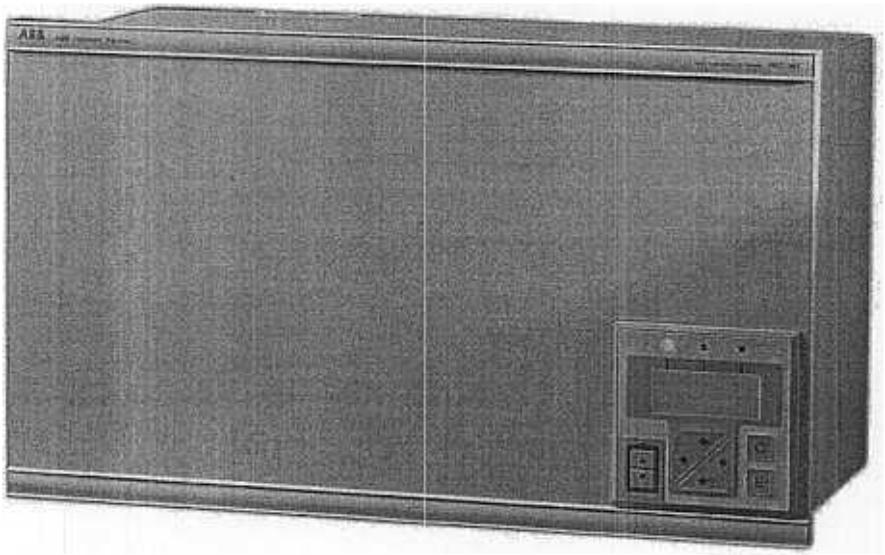

(SE 95 02 22)

Features

- Control functions in a numerical unit separated from the object protection units
- Is an advantage to use in the following applications:
  - Retrofit installations
  - Single, double and triple busbar arrangements
  - 1 1/2-breaker arrangements
  - Double breaker arrangements
  - Ringbus arrangements
- Versatile local man machine communication (MMC) from the terminal front panel
- Extensive self-supervision with fault diagnostics presented on an MMI unit

The basic version of REC 561 includes:

- Apparatus control - Control modules for 1 bay and up to 14 high-voltage apparatuses
- Interlocking - Modules for single or double breaker arrangements
- Pole discordance protection - Intended to trip at disagreement between the position of breaker poles
- Configurable logic
- Time tagged events
- Remote serial communication - LON
- Input/output modules - One input module with sixteen binary inputs and one command output board with twelve command outputs i.e. control of 6 high-voltage apparatuses

The following functions are available as options:

- Additional apparatus control - Expandable up to 12 bays and up to totally 24 high-voltage apparatuses
- Additional interlocking - Expandable up to 3 single or 2 double breaker arrangements or 2 breaker and a half diameters
- Measurements
  - Three-phase or single-phase measuring of voltage and current
  - Calculation of active power (W), reactive power (var) and frequency (Hz)
- Pulse counters for metering
- Synchro-check with phasing and energising-check
  - Settable voltage, phase angle and frequency difference
  - Energising for dead line - live bus, or live bus - dead line
  - Different energising settings for manual close command and autoreclose command
- Fuse failure supervision
  - External or internal fuse failure to block uncontrolled energizing
- Autoreclosing
  - Eight selectable programs for one or two shot, single-phase, and/or three-phase reclosing
  - Sequential reclosing of the breakers in 11/2-breaker, double breaker, and ring-bus arrangements

- Breaker failure protection
- Loss of power system voltage - Three-phase trip in case of three-phase voltage loss
- Disturbance recorder - Up to 10 analogue and 48 binary signals
- Remote serial communication - SPA
- Input/output facilities
  - Up to eleven additional modules including binary inputs and outputs and analogue inputs for mA signals

Application

The control terminal REC 561 forms a part of the Panorama Station Automation concept. The Panorama Station Automation concept includes a complete range of flexible object terminals, Station Monitoring System (SMS) and Substation Control System (SCS).

The control terminal REC 561 is used on bay level in a Substation Control System to control and supervise circuit breakers, disconnectors and earthing switches, in any kind of switchgear/busbar arrangement. Standardized pre-tested functions such as high-voltage apparatus control, interlocking, synchro-check, automatic reclosing are examples of useful functions in a bay. These functions can be implemented in the same hardware or control terminal with retained high availability of the complete system. In stations with lower requirements of independence, the functions of more than one bay can be placed in the same control terminal.

The control terminal includes plug-in units, such as processor-, memory-, input- and output modules, all mounted in 19" racks of standard European size. It is delivered either in a cubicle or as loose equipment.

Binary and analogue process signals are connected directly to REC 561, which fulfils the same EMC standards as applicable for high-voltage protections. The terminal is also provided with command output modules with double-pole outputs and supervision functions to ensure a high degree of security against unwanted operations.

The application software in REC 561 is prepared to be connected to a dedicated control panel for local control. This panel can have a switch for selection of the operators mode; station/remote, local or back-up. In station/remote mode the station is controlled from the station MMI or the control centre, depending on the selection from a VDU or station switch. Control from the control panel can only take place in local or back-up mode. The local mode ensures that the interlocking requirements are fulfilled during all operations, while the back-up mode is used in emergency situations without interlocking. Hence the back-up mode bypasses the interlocking, i.e. the REC 561.

Basic functions

Apparatus Control

The apparatus control function performs open and close commands of high-voltage apparatuses and indicates the status. The function handles commands coming from different operator places i.e. from station MMI, control centre or local panel. Permission to operate is given after evaluation of conditions from other applications such as interlocking, synchro-check, operator mode or external conditions.

Other functions included in the apparatus control are a selection and reservation function to prevent double operation, command supervision, selection of operator place, block/deblock of operation, block/deblock of updating of position indications, manual setting of position indications and overriding of the reservation and interlocking functions.

Interlocking

Interlocking means the non-permission to operate high-voltage apparatuses in a switchgear to prevent damage of the switchgear and harm to people for any command sequence.

The interlocking function consists of software modules located in each control terminal. For the station-wide interlocking, communication between modules in different bays is performed via the communication bus or hard-wired via the binary inputs/outputs.

The positions of the high-voltage apparatuses are inputs to the software modules distributed in the control terminals. Each module contains the interlocking logic for a bay. The interlocking logic in a module is different, depending on the bay function and the switchyard arrangements, i.e. double-breaker or $1^1/_2$-breaker bays have different modules.

Pole discordance protection

This function applies to circuit breakers with individual operation gears per pole or phase. A discordance caused by one pole failing to close or to open can be tolerated only for a limited time, for instance as a single-phase open time in connection with single-phase reclosing. The function is based on checking the positions of the auxiliary contacts of the breaker.

Configurable logic

A large number of configuration logic circuits are built into the REC 561 terminal, and are thus available to the user. The configuration logic contains the following functional blocks: 249 AND, 199 OR, 79 inverters, 39 exclusive OR, 5 Set-Reset,15 timers delayed at pick-up and drop-out and 55 pulse-timers. The configuration is performed from the CAP 531 configuration tool.

Time tagged events

Events are time tagged at the source, thus REC 561 provides a high accuracy with a resolution of 1 ms. An event recorder buffer for up to 150 time-tagged events for each of the last ten recorded disturbances are available via the PC connection on the front, SMS, or SCS.

Remote serial communication - LON
A serial communication port based on the LonWorks Network (here called LON) is available within the REC 561. This port is used to transfer data between different control terminals and PC-based operator stations. The communication with REC 561 uses optical fibres (glass or plastic) to eliminate influence of electromagnetic interferences.

Optional functions

Measurements
This function provides three-phase or single-phase values of voltage and current. At three-phase measurement, the values of active power (W), reactive power (var), frequency (Hz), and the mean value for voltage (U) and current (I) can be calculated. Alarm limits to be used as conditions in the configuration logic can be set. Besides the direct inputs of voltage and current, analogue inputs for mA signals are also available.

Pulse counters
The normal use of this function is the counting of energy pulses for kWh and kvarh in both directions from external energy meters. Up to 12 binary inputs in a REC 561 can be used for this purpose with a frequency of up to 40 Hz. The number of pulses in the counter is then reported via the LON bus to the operator station or read via SPA as a service value.

Synchronism and energising check
The synchro-check function is used for controlled interconnection of a line in an already interconnected network. When used, the function gives an enable signal at satisfactory voltage conditions across the breaker that is to be closed. The synchro-check function measures the difference between the voltage on the busbar side and the line side. It operates and permits closing of the circuit breaker when the set conditions are met, with respect to the voltage (UDiff), phase angle (PhaseDiff), and frequency (FreqDiff). The energising condition can be set to allow energisation in one, or the other, or both directions, e.g. as a live busbar and dead line check. It is possible to have different energising settings for manual close command and autoreclose command.

Phasing
Phasing is to be performed when two asynchronous systems are going to be connected in order to avoid stress on the network and its components. The phasing function compensates for measured slip frequency as well as the circuit breaker closing delay.

Fuse failure supervision
Associated with the energizing check function there is a fuse failure detection to block uncontrolled energization at blown VT secondary fuse or tripped fuse switch. A single-phase voltage input is used on one side of the breaker, e.g. on the busbar side. For this circuit a binary input circuit for fuse failure is used. The operation of the built-in fuse failure supervision function is based on the detection of a zero-sequence voltage without the presence of a zero sequence current.

Multibreaker autoreclosing
The reclosing function can be selected to perform single-phase and/or three-phase reclosing from eight single-shot or multi-shot reclosing programs. The three-phase autoreclose open time can be selected to give either high-speed autoreclosing or delayed autoreclosing. Three-phase autoreclosing can be performed with or without the use of the synchronism check or energizing function.

Provision is included for co-operation between autoreclosing function modules in the same terminal or between REC 561 terminals to achieve sequential reclosing of the two breakers at a line end in a $1^1/_2$-breaker, double breaker or ring-bus arrangement. One unit is defined as master and recloses first. Should it be successful and no trip takes place, the second module is released to complete the reclosing sequence. For persistent faults the breaker reclosing is limited to the first breaker. Some connections between the function modules are required, to send signals and release the autorecloser with low priority.

Breaker failure protection
This function issues a back-up trip to adjacent breakers in case of a failure of the breaker to trip and clears the fault as requested by the object protection. The function is started by a protection trip command, e.g. from the line and busbar protection through the breaker related trip relays. The start can be single-phase or three-phase. Correct fault current clearing or failure is detected by a current check in each phase. The current level can be set from 0,1 to 2 times the rated current. A second time step is used for the back-up trip command. It should be connected to trip the back-up breakers, e.g. to clear the busbar and intertrip the opposite side of the object as appropriate. The time setting range is 50-400 ms.

Loss of power system voltage
This function will provide a delayed three-phase trip in case of loss-of-power system voltage in all three phases. The trip and/or alarm is issued when all three voltage phases have been low for more than 7 seconds. It can be used as a preparative step for power system restoration.

Disturbance recorder
The disturbance recording function is an important part of a substation monitoring system, which enables the evaluation of different events within the power system. The disturbance recorder in REC 561 can memorize up to 10 analogue (transformer module) and 48 binary signals selected between all available signals. At maximum configuration the recording time is 10 seconds. Any of the recorded analogue and binary signals is programmable to start a recording. Furthermore, analogue signals are programmable for over functions and under functions, and binary signals can start recording with a transition from a logical 0 to a logical 1 and vice versa. The time

base is synchronized with an internal clock and via the synchronizing facilities. Pre-fault time, post-fault time and limit time are settable in wide ranges. The collection of disturbance records is possible locally by means of a PC used for local man-machine communication, as well as remotely within the SMS. The disturbance evaluating PC-based program type REVAL, operating in MS Windows, is also available.

Remote communication - SPA
Optionally, one SPA communication port is available on the rear side of the terminal. The communication with REC 561 uses optical fibres to eliminate influence of electromagnetic interferences. This enables REC 561 to be a part of an independent Station Monitoring System (SMS).

Input/output facilities
The basic version of REC 561 includes input/output (I/O) modules that consist of 16 binary inputs, 12 command/24 single outputs and one switch-over contact used for the signaling of a continuous self-supervision function. Up to 11 additional I/O modules, each of them consisting of 16 binary inputs or 12 command/24 single outputs, or mixed modules with eight inputs and 12 single outputs, are available options. Totally six modules (five optional modules) of any combination of the command output modules and the mixed modules can be included. All the binary inputs and outputs are freely programmable for any of the built-in functions to assure the greatest possible flexibility.

Also up to six analogue input modules, each of them consisting of six channels for mA signals, can be included in these additional I/O modules. The inputs can be used for connection to external transducers.

Design

The REC 561 control terminal is supplied in a ventilated case of common ABB look, which is 19" wide and 6U (10") high. A motherboard is mounted under the front cover of the terminal. All other units are of plug-in type and thus easily removable. Screw connection terminals, mounted on the back plane of the terminal, serve for the electrical connections to the external circuits. Optical connectors that serve for remote communication purposes within the SCS and SMS are located on the back plane too.

The basic configuration of REC 561 consists of the following units:

- Main processing module that performs all the REC 561 measuring functions
- Power supply module, which comprises a regulated DC/DC converter that provides stabilized auxiliary voltage to all static circuits. One output relay, used for the self-supervision function, is installed in the same module. Man-machine interface module is installed on the front of REC 561 and serves as a local communication facility between the user and the equipment.
- One input module including 16 binary input circuits.
- One output module including supervision functions for 12 double-pole command output relays or 24 single outputs.

The following hardware functions are available optionally:

- Transformer module with five voltage and five current input transformers
- A/D conversion module for 10 analogue signals, operating with a sampling frequency of 2000 Hz
- Up to eleven additional modules, each of them consisting of 16 binary input circuits or 12 command output relays or 6 analogue input channels for mA signals.

Also mixed I/O-modules with 8 inputs and 12 relay outputs are available. Note that these modules have limited functionality compared to the 16-binary input and the 12-command output modules regarding oscillation suppression and supervised outputs.

Self-supervision
The self-supervision function operates continuously and includes:

- Normal microprocessor watchdog function
- Checking of digitized measuring signals
- Checksum verification of PROM contents
- Checksum verification of types of signal communication
- Read-Write-Read-Write cycling of the memory cells and internal registers

Technical data

Table 1: Energizing quantities, rated values and limits

Quantity	Rated value	Nominal range
Current	I_r = 1 or 5 A	(0,2-30) x I_r
Operative range	(0,2-100) × I_r	
Permissive overload	4 × I_r cont.	
	100 × I_r for 1 s *)	
Burden	< 0,25 VA at I_r	
ac voltage Ph-Ph	U_r = 100/110/115/120 V	(80-120)% of U_r
Operative range	1,5 × U_r cont.	
	2,5 × U_r for 1 s	
Burden	< 0,2 VA at U_r	
Frequency	f_r = 50/60 Hz	± 5%
Auxiliary dc voltage EL	EL = (48-250) V	± 20%
power consumption		
basic terminal	≤ 16 W	
Binary input/output module		
dc voltage RL	RL24 = (24/30)V	± 20%
	RL48 = (48/60)V	± 20%
	RL110 = (110/125)V	± 20%
	RL220 = (220/250)V	± 20%
power consumption		
each I/O-module	≤ 1,0 W	
each output relay	≤ 0,15 W	
RL24 = (24/30)V	max. 0,05 W/input	
RL48 = (48/60)V	max. 0,1 W/input	
RL110 = (110/125)V	max. 0,2 W/input	
RL220 = (220/250)V	max. 0,4 W/input	
Binary input module		
dc voltage RL	RL24 = (24/30)V	± 20%
	RL48 = (48/60)V	± 20%
	RL110 = (110/125)V	± 20%
	RL220 = (220/250)V	± 20%
power consumption		
each input-module	≤ 0,5 W	
RL24 = (24/30)V	max. 0,05 W/input	
RL48 = (48/60)V	max. 0,1 W/input	
RL110 = (110/125)V	max. 0,2 W/input	
RL220 = (220/250)V	max. 0,4 W/input	
Binary output module		
power consumption		
each output-module	≤ 1,0 W	
each output relay	≤ 0,25 W	
mA input module		
input range	± 20 mA	± 10%
input resistance	R_{in} = 194 Ohm	
power consumption		
each mA-module	≤ 4 W	
each mA input	≤ 0,1 W	
Ambient temperature	20° C	-5° C to +55° C
Ripple in dc auxiliary voltage	max. 2%	max. 12%
Relative humidity	(10-90)%	(10-90)%

*) max. 350 A for 1 s when COMBIFLEX test switch included together with the product

Table 2: Influencing factors, Permissible influence

Dependence on:	Within nominal range	Within operative range
Ambient temperature	0,01% / °C	Correct function
Ripple in auxiliary dc voltage	Negligible	Correct function
Interruption in auxiliary dc voltage without resetting correct function restart time	 < 50 ms 0-∞ < 100 s	 < 50 ms 0-∞ < 100 s

Table 3: Electromagnetic compatibility tests

Test	Type test values	Reference standards
1 MHz burst disturbance	2,5 kV	IEC 255-22-1, Class III
Electrostatic discharge	8 kV	IEC 255-22-2, Class III
Fast transient disturbance	4 kV	IEC 255-22-4, Class IV
Radiated electromagnetic field disturbance	10 V/m, (25-1000) MHz	IEC 255-22-3, Class III Draft IEEE/ANSI C37.90.2

Table 4: Insulation tests (reference standard: IEC 255-5)

Test	Type test values
Dielectric test	2,0 kV ac, 1 min
Impulse voltage test	5 kV, 1,2/50 µs, 0,5 J
Insulation resistance	>100 MΩ at 500 V dc

Table 5: Mechanical tests

Test	Type test values	Reference standards
Vibration	Class I	IEC 255-21-1
Shock and bump	Class I	IEC 255-21-2
Seismic	Class I	IEC 255-21-3

Table 6: Contact data (reference standard: IEC 255)

Function or quantity	Trip and Signal relays	Fast signal relays
Max system voltage	250 V ac, dc	250 V ac, dc
Test voltage across open contact, 1 min	1000 V rms	800 V dc
Current carrying capacity continuous 1 s	 8 A 10 A	 8 A 10 A
Making capacity at inductive load with L/R>10 ms 0,2 s 1,0 s	 30 A 10 A	 0,4 A 0,4 A
Breaking capacity for ac, cos φ>0,4	250 V/8,0 A	250 V/8,0 A
Breaking capacity for dc with L/R<40 ms	48 V/1 A 110 V/0,4 A 220 V/0,2 A 250 V/0,15 A	48 V/1 A 110 V/0,4 A 220 V/0,2 A 250 V/0,15 A
Maximum capacitive load	-	10 nF

Table 7: Additional general data

Weight approx.	
basic	7 kg
max	14 kg
Dimensions	
width	448mm (full width)
height	267 mm
depth	245 mm
Storage temperature	-40° C to +70° C

Table 8: Mean value

Function	Nominal range	Accuracy
	(0,95-1,05) x f_r	± 0,2 Hz
	(0,1-1,5) x U_r	± 2,5% of U_r at $U \leq U_r$ ± 2,5% of U at $U > U_r$
Current	(0,2-4) x I_r	± 2,5% of I_r at $I \leq I_r$ ± 2,5% of I at $I > I_r$
Active power *) Reactive power *)	at $\lvert\cos\varphi\rvert \geq 0,9$ at $\lvert\cos\varphi\rvert \leq 0,8$	± 5% ± 7,5%

*) Measured U_r and 20% of I_r

Table 9: Mean values with increased accuracy

Function	Nominal range	Accuracy
Frequency	(0,95-1,05) x f_r	± 0,2 Hz
Voltage	(0,8-1,2) x U_r	± 0,25% of U_r at $U \leq U_r$ ± 0,25% of U at $U > U_r$
Current	(0,2-2) x I_r	± 0,25% of I_r at $I \leq I_r$ ± 0,25% of I at $I > I_r$
Active power	at $\lvert\cos\varphi\rvert \geq 0,9$ $0,8 \times U_r < U < 1,2 \times U_r$ $0,2 \times I_r < I < 2 \times I_r$	± 0,5% of P_r at $P \leq P_r$ *) ± 0,5% of P at $P > P_r$ *)

*) P_r active power at $U = U_r$, $I = I_r$ and $\lvert\cos\varphi\rvert = 1$

Table 10: Event recording

Function	Value
Time tagging resolution	1 ms
Event buffering capacity	
Max. number of events/disturbance report	150
Max. number of disturbance reports	10
Time tagging error with synchronization once/1s	± 1,5 ms
Time tagging error with synchronization once/10s	± 1,5 ms
Time tagging error with synchronization once/60s (minute pulse synchronization)	± 1,5 ms
Time tagging error without synchronization	± 3 ms/min

Table 11: Remote serial communication (SPA)

Function	Value
Protocol	SPA
Communication speed	300, 1200, 2400, 4800, 9600, 19200 or 38400 bit/s
Slave number	1 to 899
Remote change of active group allowed	yes/no
Remote changed of settings allowed	yes/no
Connectors and optical fibres	glass or plastic

Table 12: Remote serial communication (LON)

Function	Value
Protocol	LON
Communication speed	1,25 Mbit/s
Connectors and optical fibres	glass or plastic

Table 13: Disturbance recorder

Function	Setting range
Number of binary signals	0-48
Number of analogue signals	0-10
Sampling rate	2 kHz
Recording bandwidth	(5-250) Hz
Overcurrent triggering	(0-5000)% of I_r in steps of 1%
Undercurrent triggering	(0-200)% of I_r in steps of 1%
Overvoltage triggering	(0-200)% of $U_r / \sqrt{3}$ in steps of 1% at 100 V sec
Undervoltage triggering	(0-110)% of $U_r / \sqrt{3}$ in steps of 1%
Pre-fault time	(50-300) ms in steps of 10 ms
Post fault time	(100-3000) ms in steps of 100 ms
Limit time	(500-4000) ms in steps of 100 ms
Number of recorded disturbances	Max 10 disturbances
Function	**Value**
Voltage channels dynamic range resolution	 (0,01-2,0) x $U_r / \sqrt{3}$ at 100 V sec. 0,1% of $U_r / \sqrt{3}$
Current channels dynamic range without dc offset with full dc offset resolution	 (0,01-110) x I_r (0,01-60) x I_r 0,5% of I_r
Total recording time with 10 analogue and 48 binary signals recorded	typical 15 s
Built-in calendar	for 30 years with leap years

Table 15: Loss of voltage protection

Function	Setting range
Operating voltage U<	(20-80)% of $U_r / \sqrt{3}$ in steps of 1%
Time delay	7 s

Table 16: Fuse failure supervision function

Function	Setting range
Zero sequence quantities: operating voltage $3U_0$ operating current $3I_0$	 (10-50)% of $U_r / \sqrt{3}$ in steps of 1% (10-50)% of I_r in steps of 1%
Negative sequence quantities operating voltage $3U_2$ operating current $3I_2$	 (10-50)% of $U_r / \sqrt{3}$ in steps of 1% (10-50)% of I_r in steps of 1%

Table 18: Autoreclosing - Single- and/or three-phase

Function	Setting range
Number of autoreclosing shots	1-4
Number of autoreclosing programs	8
Auto-reclosing open time: 1-phase shot 1 - t1s 3-phase shot 1 - t1 3-phase shot 2 - t2 3-phase shot 3 - t3 3-phase shot 4 - t4	 (0,2-5,0) s in steps of 0,01 s (0,2-60) s in steps of 0,01 s (1,0-300) s in steps of 1 s (1,0-300) s in steps of 1 s (1,0-300) s in steps of 1 s
Reclaim time - tReclaim	(10-300) s in steps of 1 s
Inhibit reclosing, reset time - tInhibit	(5-30) s in steps of 1 s
Duration of reclosing pulse - tPulse	(0,1-1,0) s in steps of 0,01 s
SC/DL time limit - tSync	(0,5-300,0) s in steps of 0,1 s
Breaker closed before start - tCB	5 s
Resetting of "AR Started" after reclosing - tTrip	(0,2-1,0) s in steps of 0,1 s
Wait for Master release - tWait	(30-300) s in steps of 1 s

Table 19: Synchro-check with phasing and energising-check

Function	Setting range
Synchro-check frequency difference limit, FreqDiff voltage difference limit, UDiff phase difference limit, PhaseDiff	 (50-300) mHz in steps of 10 mHz (5-60)% of $U_r / \sqrt{3}$ in steps of 1% (5-75)° in steps of 1°
Energising voltage level high, UHigh voltage level low, ULow energizing time	 (70-100)% of $U_r / \sqrt{3}$ in steps of 1% (10-80)% of $U_r / \sqrt{3}$ in steps of 1% (0-1) s in steps of 0,01 s
Phasing slip frequency, FreqDiffSynch breaker closing time, tBreaker	 (50-500) mHz in steps of 10 mHz (0,02-0,50) s in steps of 0,01 s
Phase shift φ_{line} - φ_{bus} Voltage ratio U_{bus}/U_{line}	(0-360)° in steps of 5° (0,20-5,00) in steps of 0,01
Operating time	**Value**
For synchro-check function For energising-check function	typical 190 ms typical 80 ms

Table 20: Breaker failure protection

Function	Setting range
Operating current I> (one measuring element per phase)	(10-200)% of I_r in steps of 1%
Retrip time delay t1	(0-150) ms in steps of 1 ms
Back-up trip time delay t2	(50-400) ms in steps of 1 ms
	Value
Trip operate time	max 18 ms
Operate time for current detection	max 10 ms

Table 21: Pole discordance protection

Function	Setting range
Auxiliary contact based function - time delay	0-5 s

Table 22: mA measuring function

Function	Setting range
mA measuring function	±5, ±10, ±20 mA 0-5, 0-10, 0-20, 4-20 mA

Diagram

Typical REC 561 configurations

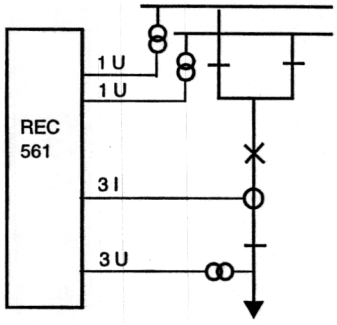

Fig. 1 Double busbar, single breaker

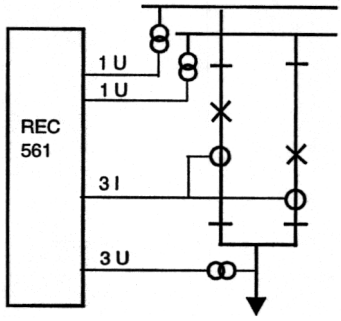

Fig. 2 Double busbar, double breaker

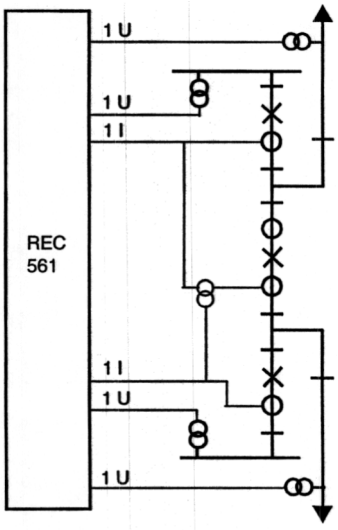

Fig. 3 Breaker-and-a-half

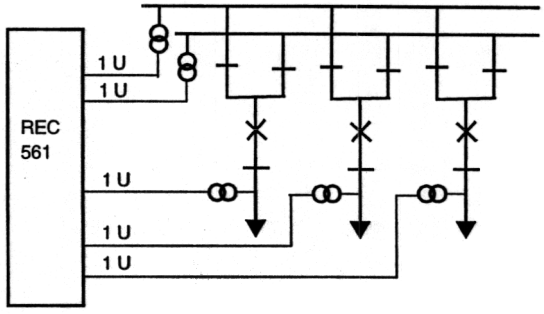

Fig. 4 Synchro-check function for up to 3 bays

Ordering

The basic version of REC 561 is a control terminal with software modules for apparatus control for one bay and 14 high-voltage apparatuses and interlocking modules for single or double breaker arrangements. The basic version includes: pole discordance protection, configurable logic, one LON communication port, one binary input module, and one binary output module.

Ordering Number: 1MRK 000 598-AB **Quantity:** ☐
Includes basic and the selected options below

Basic data to specify:

LON port	**Transmitter**	**Receiver**	
	Plastic	Plastic	☐ 1MRK 000 168-EA
	Glass	Glass	☐ 1MRK 000 168-DA

Control function options:

1. Apparatus control modules for two additional bays and 10 additional high-voltage apparatuses. Additional interlocking modules for two single breaker or one double breaker arrangements or one $1^1/_2$- breaker diameter are included.
2. Apparatus control modules for 11 additional bays without interlocking and 10 additional high-voltage apparatuses. Interlocking modules for two $1^1/_2$-breaker diameters are included.

In the table below, first select the bay arrangement. Then select the desired optional functions from that column only.
■ = Not applicable

Functions		Typical switchyard arrangements						Ordering number
		One bay		2-3 bays single CB	Two bays double CB	One 11/2 CB diam	12 bays or two 11/2 CB diam	
		Single CB	Double CB					
Basic				■	■	■	■	1MRK 000 598-AB
Basic + control function, option 1		■	■				■	1MRK 000 598-AB + 1MRK 000 597-AA
Basic + control function, option 2		■	■	■	■	■		1MRK 000 598-AB + 1MRK 000 597-BA
Pulse counters for metering (12)								1MRK 000 597-TA
Autoreclosing for (Only one alternative can be selected)	1 CB		■		■	■		1MRK 000 597-GA
	3 CB	■						1MRK 000 597-HA
	6 CB	■	■	■		■		1MRK 000 597-XA
German MMI (English version is replaced)								1MRK 000 597-NA
Transformer and A/D-conversion module for 5 U and 5 I	1 A			1)	1)	1)	1)	1MRK 000 597-UA
	5 A			1)	1)	1)	1)	1MRK 000 597-VA

Functions		Typical switchyard arrangements						Ordering number
		One bay		2-3 bays single CB	Two bays double CB	One 11/2 CB diam	12 bays or two 11/2 CB diam	
		Single CB	Double CB					
The functions below require the transformer and A/D-conversion module.								
Increased measuring accuracy for U, I, P, Q (factory calibration)								1MRK 000 597-PA
Synchro-check and energising-check[3]	1 bay, single CB						2)	1MRK 000 597-CA
	1 bay, double CB							1MRK 000 597-RA
	2-3 bays, single CB							1MRK 000 597-DA
	2 bays, double CB							1MRK 000 597-SA
	One 11/2-breaker diameter							1MRK 000 597-EA
Synchro-check with phasing and energising-check[3]	1 bay, single CB							1MRK 001 458-KA
	1 bay, double CB							1MRK 001 457-HA
Fuse failure								1MRK 000 597-FA
Breaker failure protection								1MRK 000 597-KA
Loss-of-power system voltage								1MRK 000 597-LA
Disturbance recorder								1MRK 000 597-MA

1) One-phase values without calculation of P, Q and f

2) To be used for external voltage selection.

3) Only one alternative of the synchro-check/phasing functions can be selected

Basic in/out modules

	Interface DC voltage	Quantity (totally 2)	Ordering number
Binary input module (16 inputs)	24/30 V		1MRK 000 508-DA
	48/60 V		1MRK 000 508-AA
(Only one type can be selected)	110/125 V		1MRK 000 508-BA
	220/250 V		1MRK 000 508-CA
Binary output module (24 single outputs or 12 command outputs)		1	1MRK 000 614-AA

Additional in/out modules
(Totally 11 additional modules can be selected.)

	Interface DC voltage	Quantity (totally 11)	Ordering number
Binary input module (16 inputs)	24/30 V		1MRK 000 508-DA
	48/60 V		1MRK 000 508-AA
	110/125 V		1MRK 000 508-BA
	220/250 V		1MRK 000 508-CA
Binary in/out module[1] (8 inputs and 12 outputs)	24/30 V		1MRK 000 173-GA
	48/60 V		1MRK 000 173-AB
	110/125 V		1MRK 000 173-BB
	220/250 V		1MRK 000 173-CB
Binary output module[1] (24 single outputs or 12 command outputs)			1MRK 000 614-AA
mA input module, 6 channels (up to 6 modules can be selected)			1MRK 000 284-AA

[1] Totally up to 6 modules of any combination of binary in/out and binary output modules can be used in REC 561.

Remote communication (SMS/SCS):

Additional port SPA	Transmitter	Receiver	
	Plastic	Plastic	☐ 1MRK 000 168-FA
	Glass	Glass	☐ 1MRK 000 168-HA

Mounting details with IP40 degree of protection from the front:

19" rack	☐ 1MRK 000 020-CA
Wall mounting	☐ 1MRK 000 020-DA
Flush mounting	☐ 1MRK 000 020-Y
additional for IP54	☐ 1MKC 980 001-2
No mounting details	☐

Accessories:

User's Guide for REC 561 * 1.1	**Quantity:**	☐	1MRK 511 009-UEN
Front connection cable for PC (Opto/9-pol D-sub)	**Quantity:**	☐	1MKC 950 001-1
SMS-BASE Basic program for SMS and PC front connection	**Quantity:**	☐	RS 881 007-AA
SM/REC 561 SMS Program module for REC 561 * 1.1	**Quantity:**	☐	1MRK 000 314-HB
CAP 531, Graphical configuration tool IEC 1131-3 (requires SMS-BASE and SM/REC 561)	**Quantity:**	☐	1MRK 000 876-KA
CAP/REC 561, CAP program module for REC 561 * 1.1	**Quantity:**	☐	1MRK 000 876-HB

For our reference and statistics we would be pleased if we are provided with the following application data:

Country: End user:

Station name: Voltage level: kV

References

Series REx 500 Mechanical design and mounting accessories	1MRK 514 003-BEN
User's Guide REC 561 * 1.1	1MRK 511 009-UEN
Reference List REC 561	1MRK 511 009-REN
SMS 010	1MRK 511 014-BEN
CAP 531	1MRK 511 034-BEN