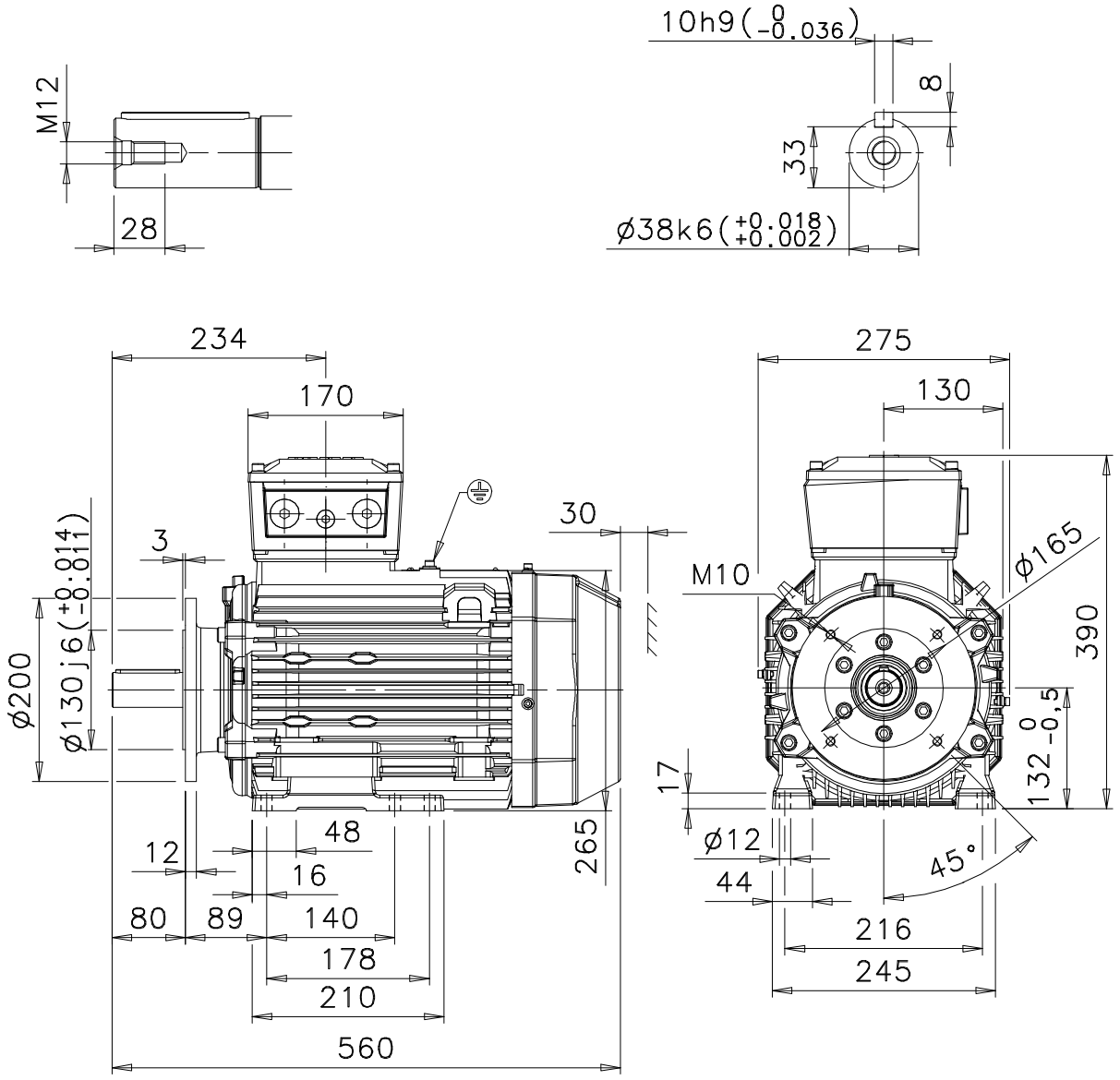

Additional information:

Dimension Print	Motor Type: M3JP 132SM_2-8, B34, FT165	Document No: 3GZF500213-78 A 13 JP 132 A
Description: STANDARD SQUIRREL CAGE MOTOR		

Unit: ABB Oy, Motors and Generators	Issued by: R.Ketonen	Replaces:	
Date: 09.02.2011	Approved by: P.Viitanen	Replaced by:	
ABB Oy	Customer Reference:		ABB