Doc. N.° 1SDH000721R0624 - ECN000140444 - Rev. C

SACE Tmax XT

Tensione Ausiliaria 24 VDC XT2 - XT4 F - P - W
Auxiliary Voltage 24 VDC XT2 - XT4 F - P - W
Abnahme der Hilfsspannung 24 VDC XT2 - XT4 F - P - W
Tension Auxiliaire 24 VDC XT2 - XT4 F - P - W
Tension Auxiliar 24 VDC XT2 - XT4 F - P - W
辅助电压 24 VDC XT2 - XT4 F - P - W

XT2 - XT4/III - IV

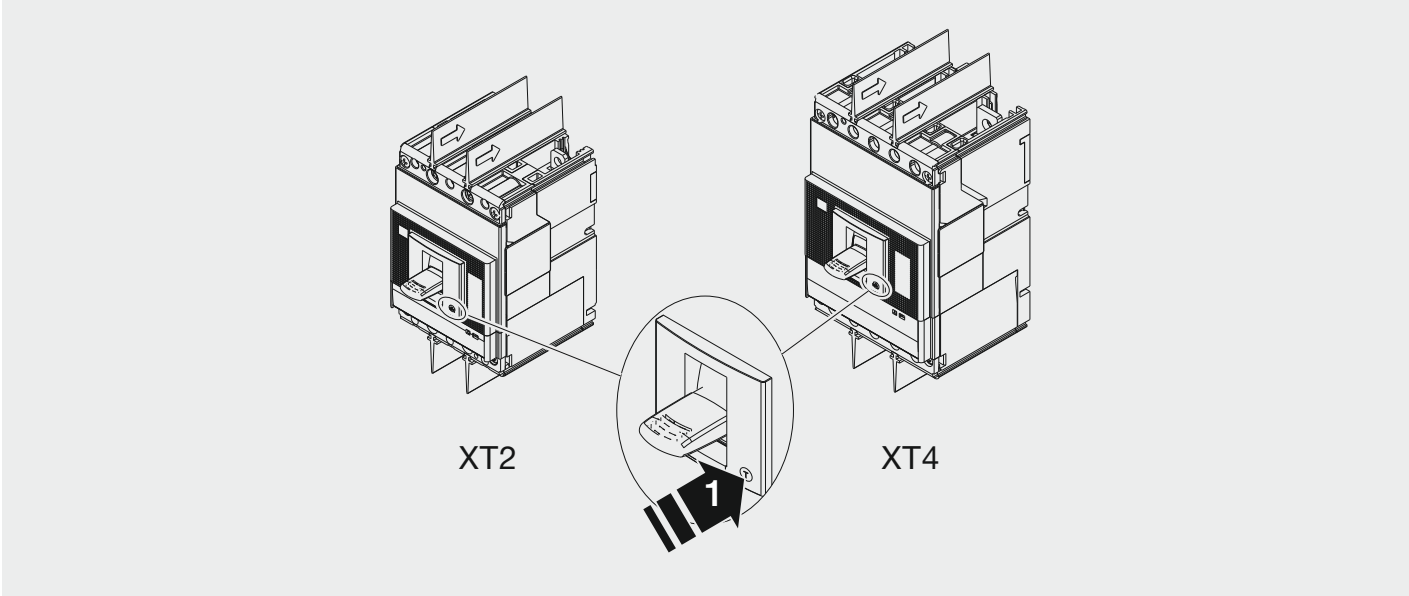

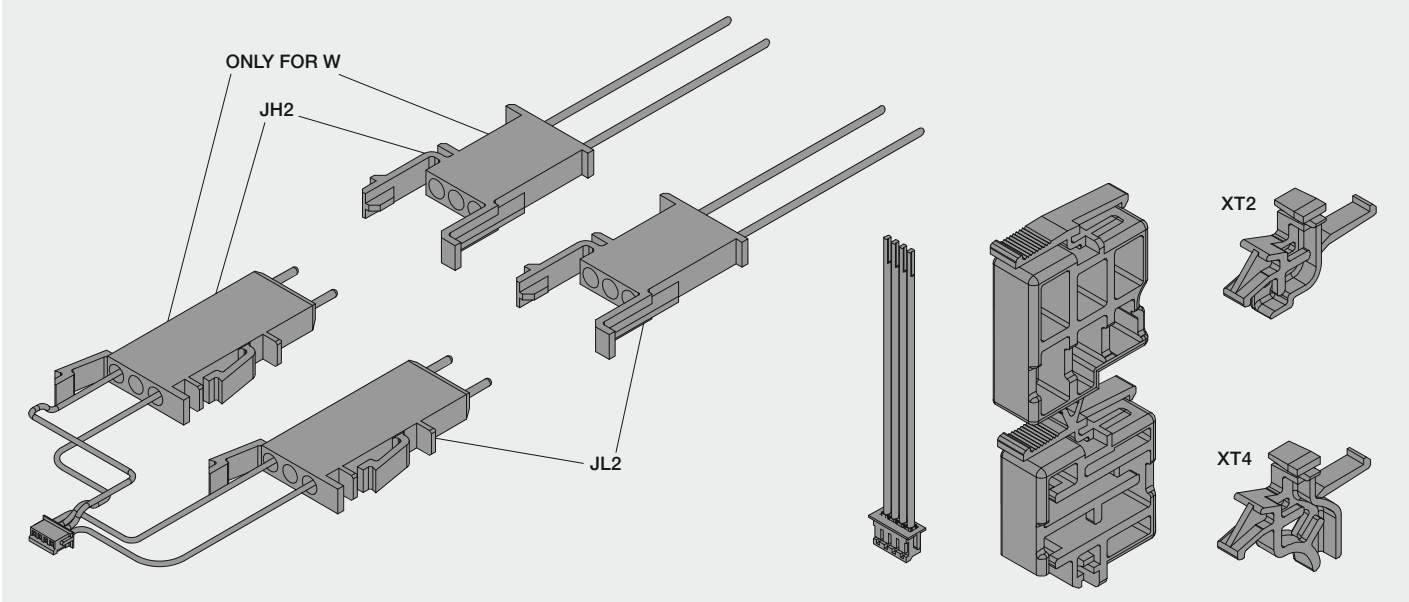

1

ONLY FOR XT2 F - XT4 F

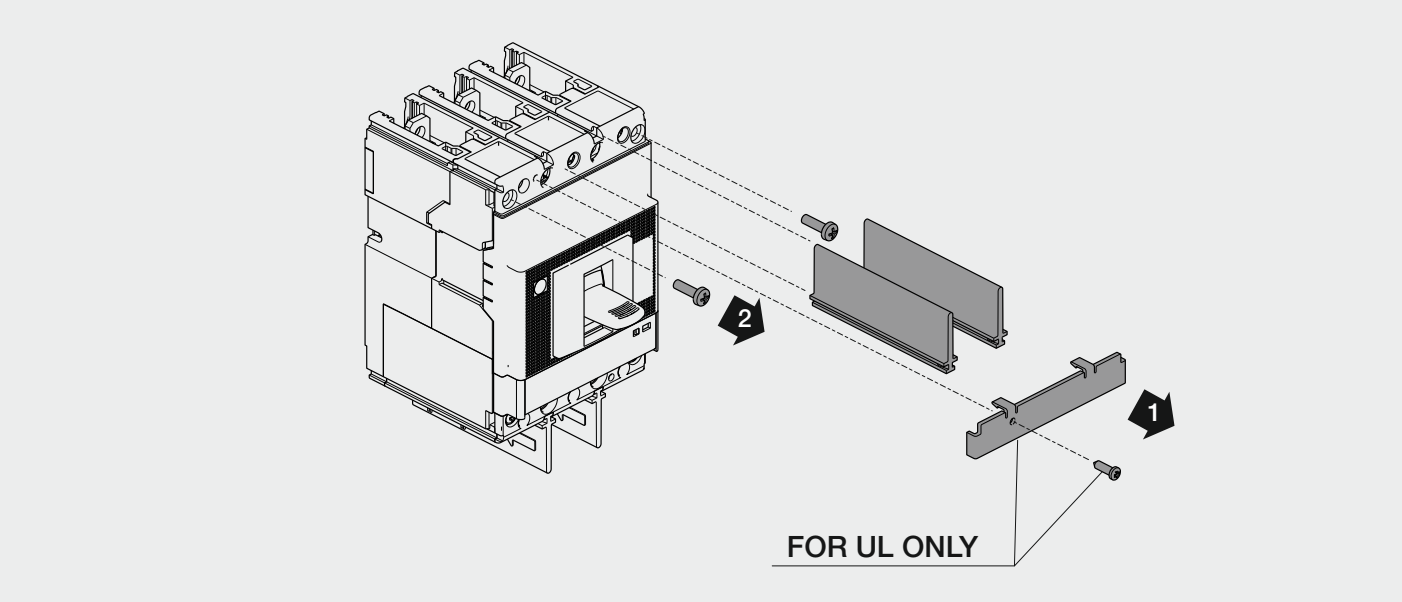

2

XT4 V - X ONLY

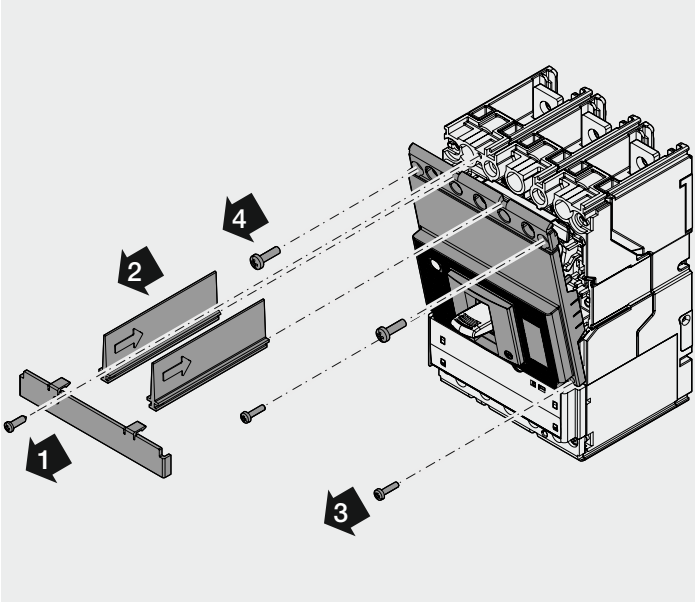

3

ONLY FOR XT2 F/P - XT4 F/P

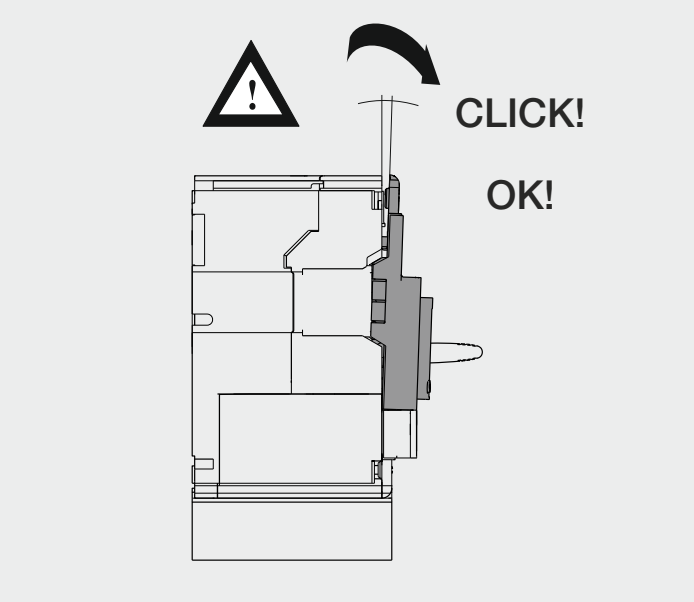

4

ONLY FOR XT2 F/P - XT4 F/P

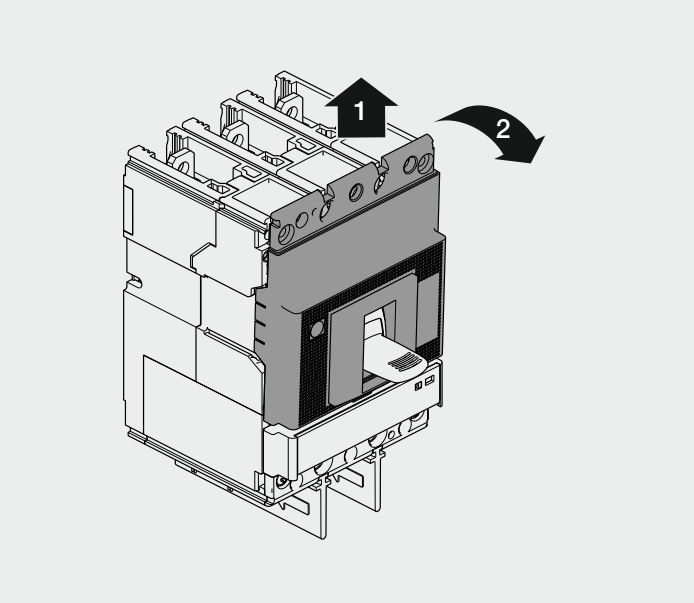

5

XT2 - XT4 F - P

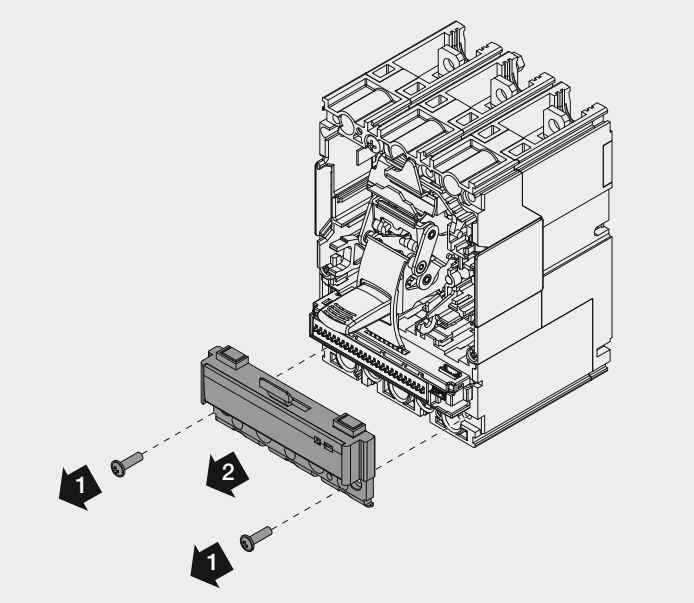

6 XT2 - XT4 F - P

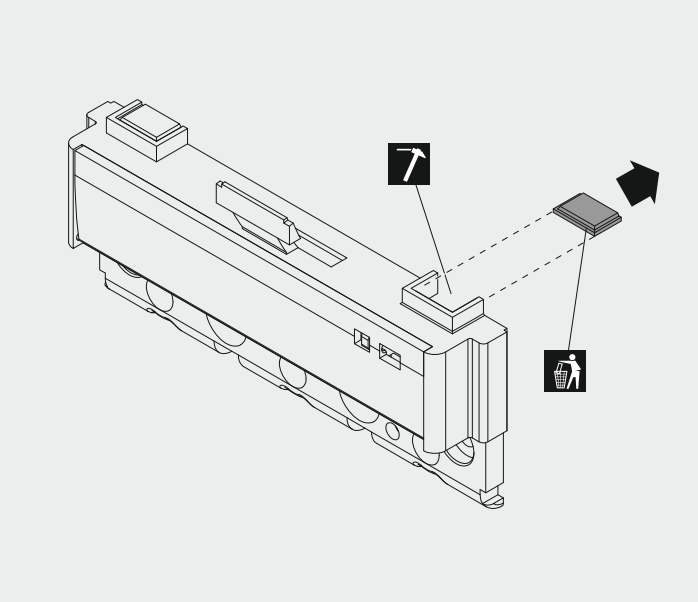

7 XT2 - XT4 F - P

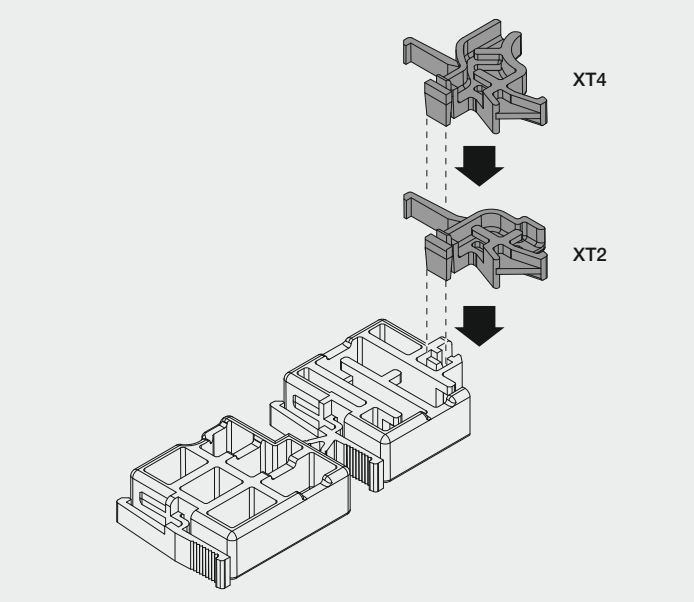

8 XT2

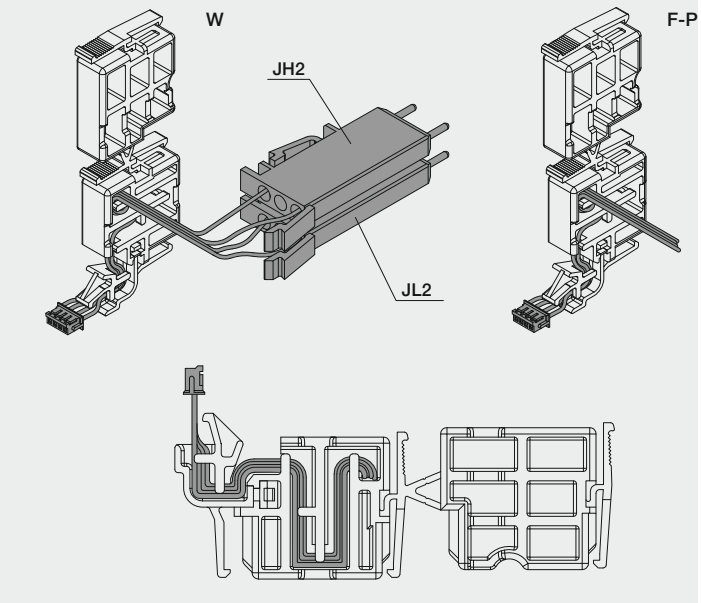

9 XT4

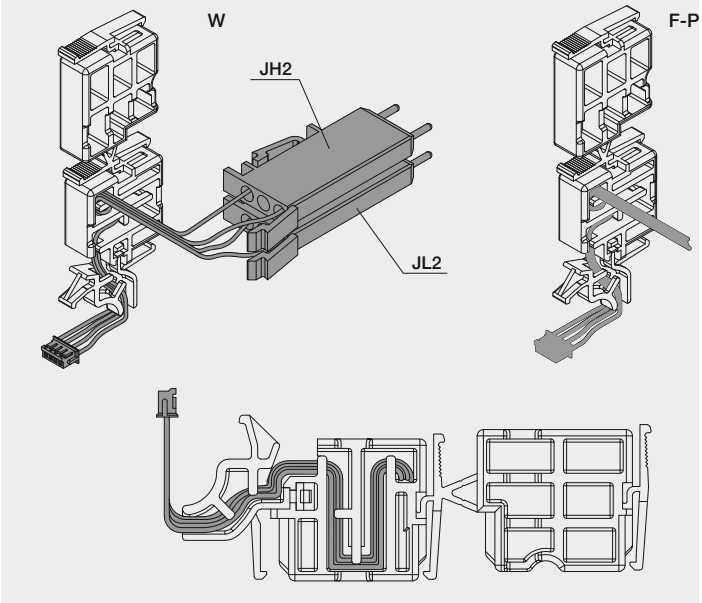

10 XT2 - XT4 F - P

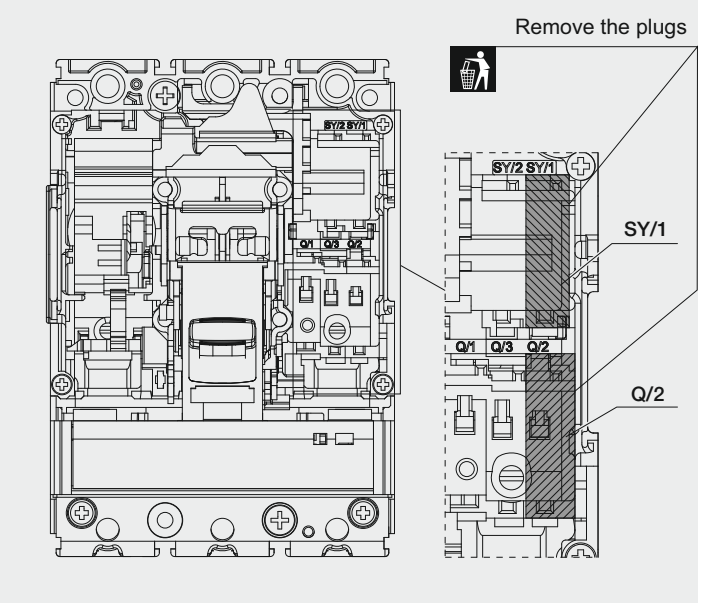

11 XT2 - XT4 F - P

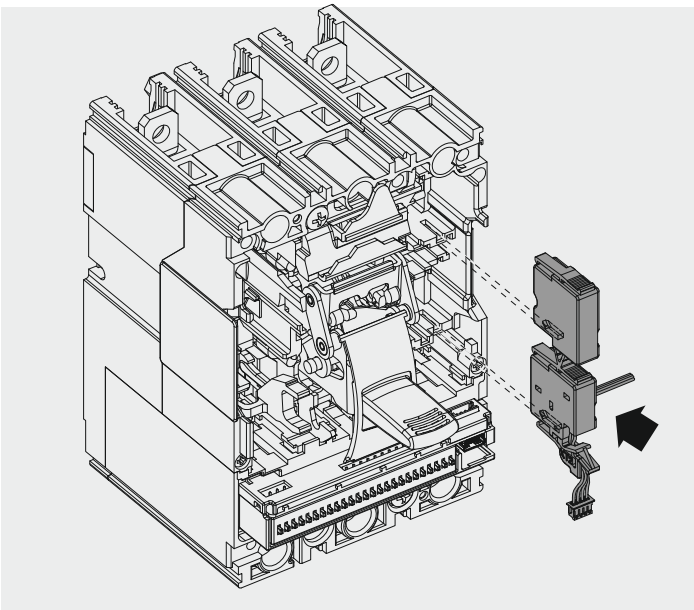

12 XT2 - XT4 F - P

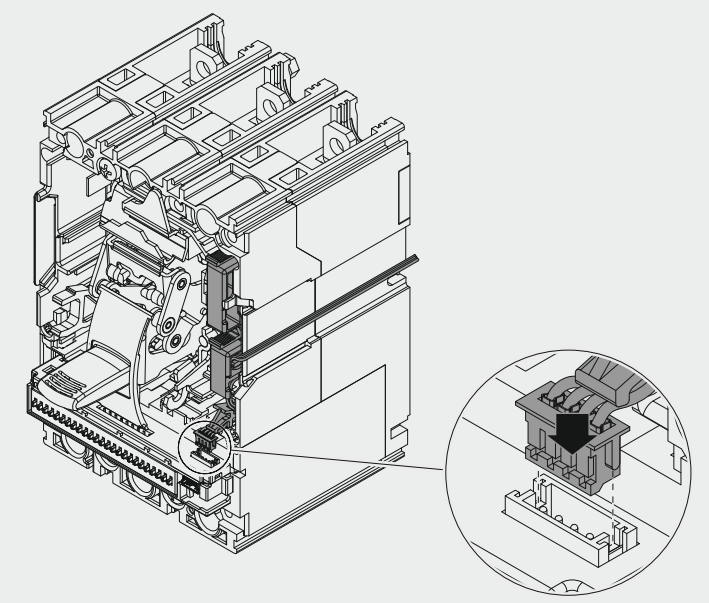

13 XT2 - XT4 F - P

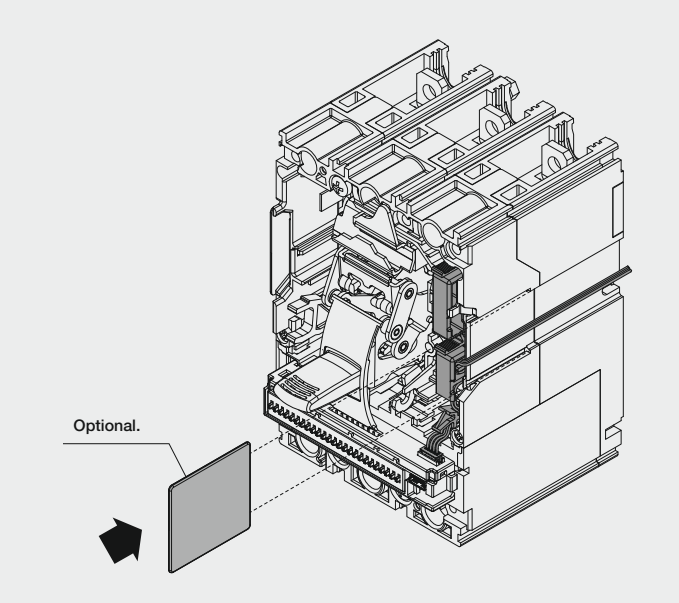

14 XT2 - XT4 F - P

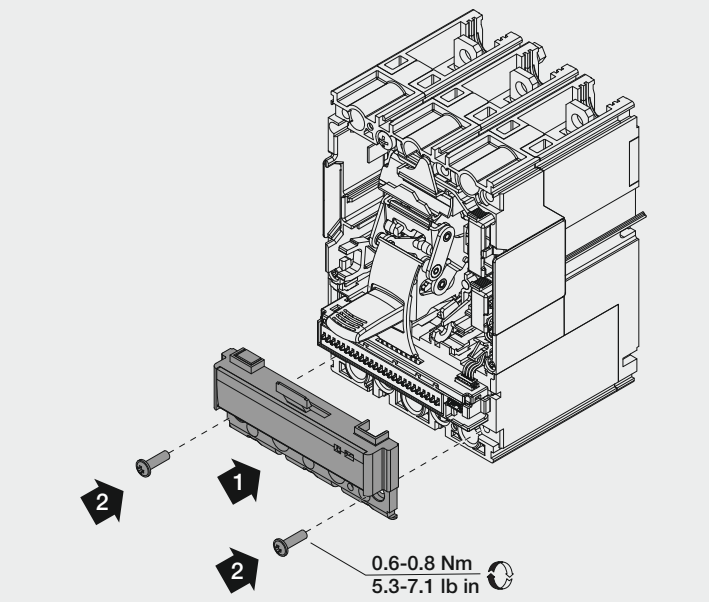

15 XT2 - XT4 F - P

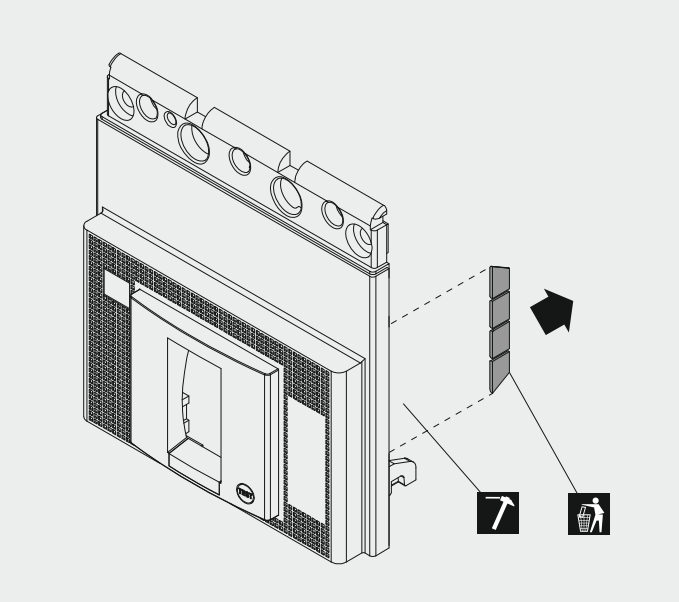

16 XT2 - XT4 F - P

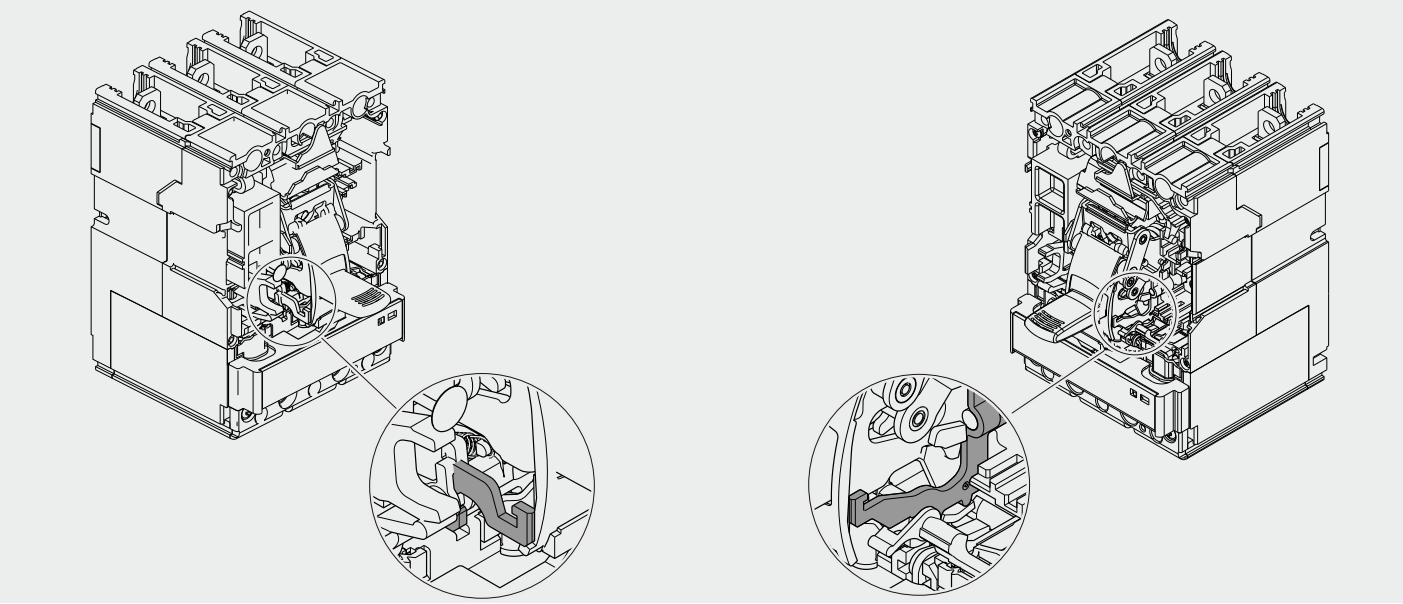

17

XT2 - XT4 F - P

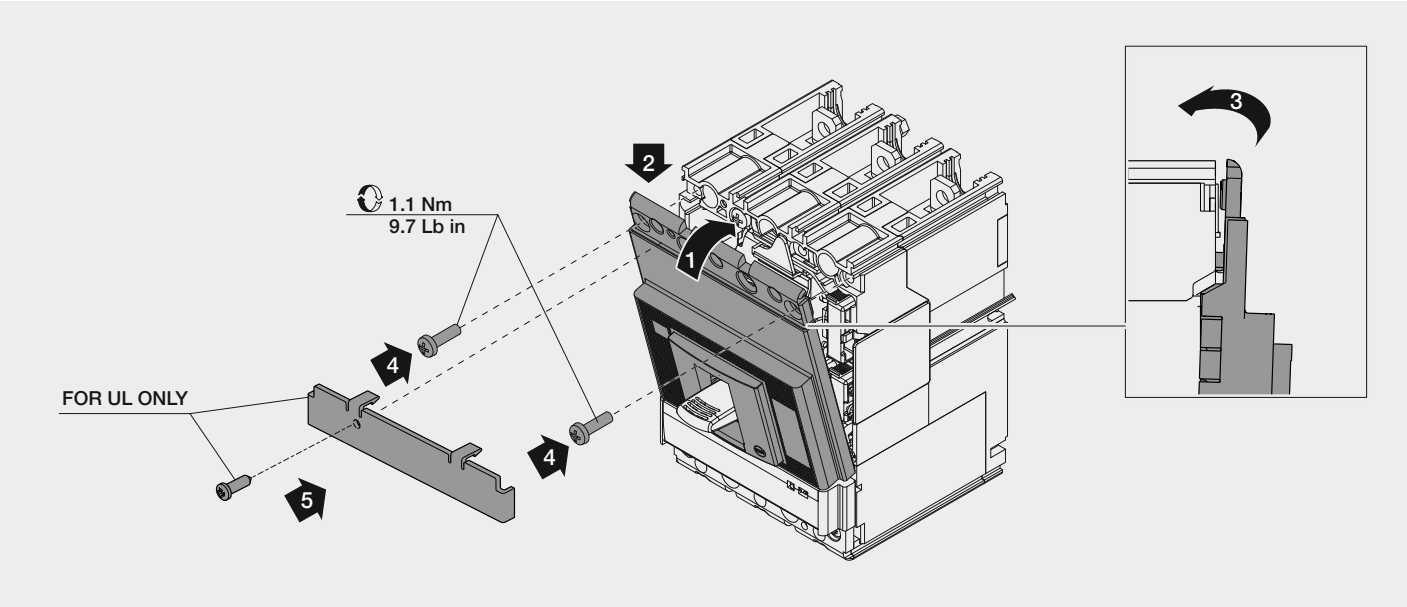

18

XT4 F/P V - X ONLY

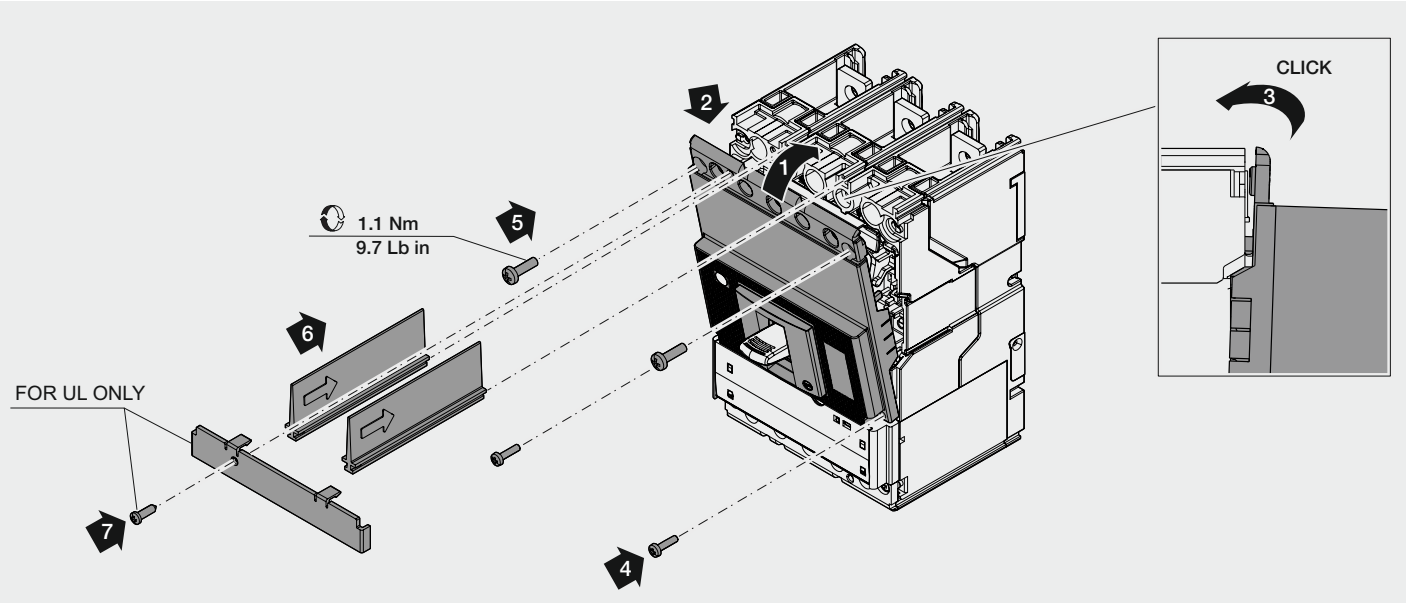

19

XT2 - XT4 W

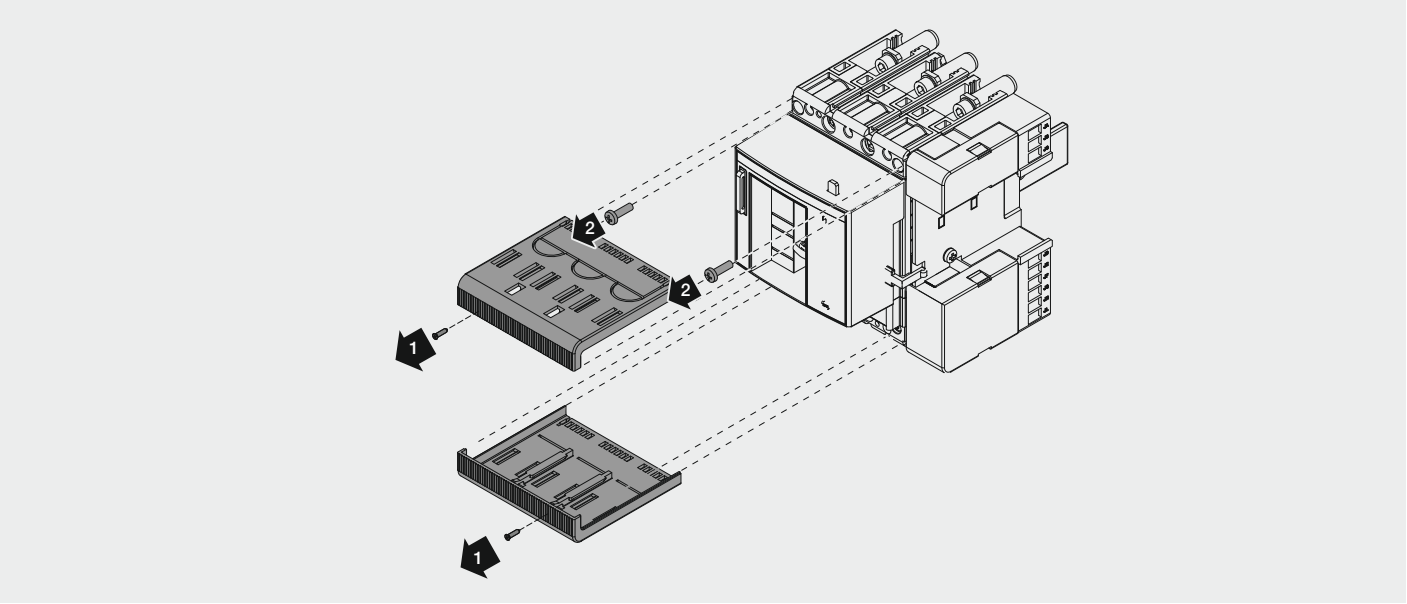

20

XT4 V - X W ONLY

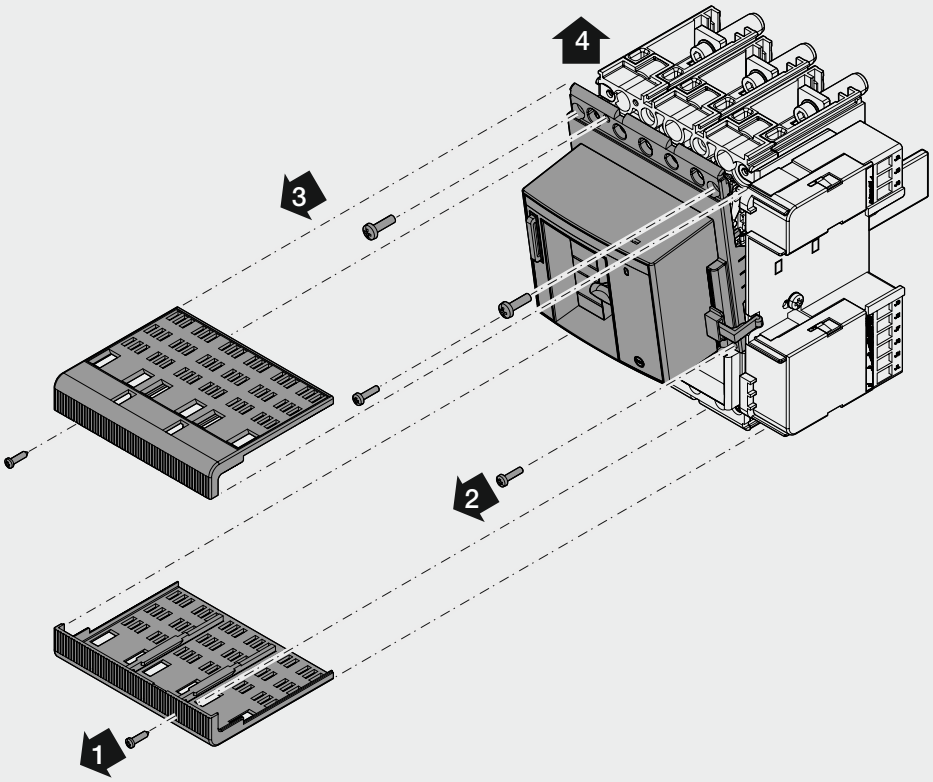

21

XT2 - XT4 W

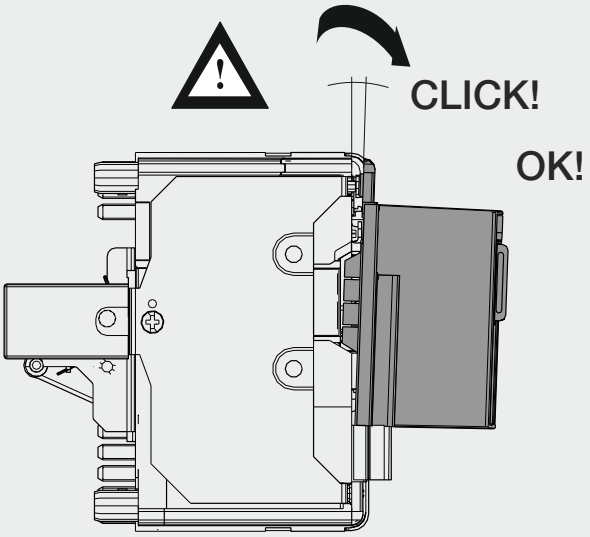

22 XT2 - XT4 W

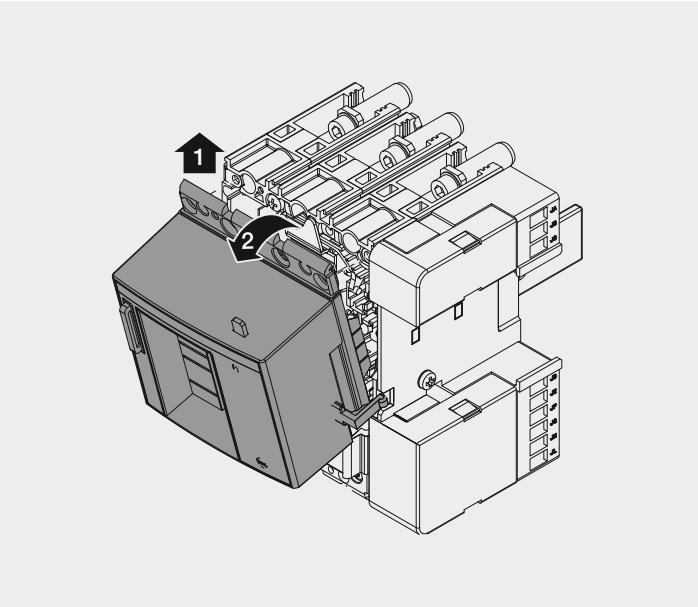

23 XT2 - XT4 W

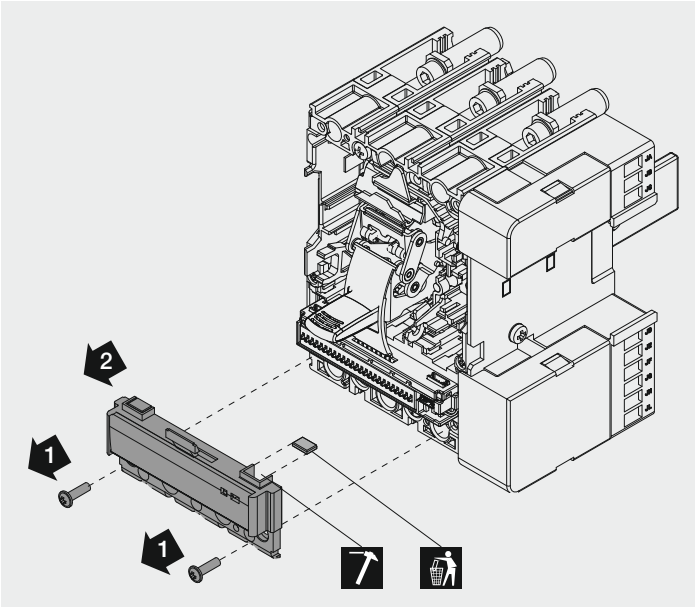

24

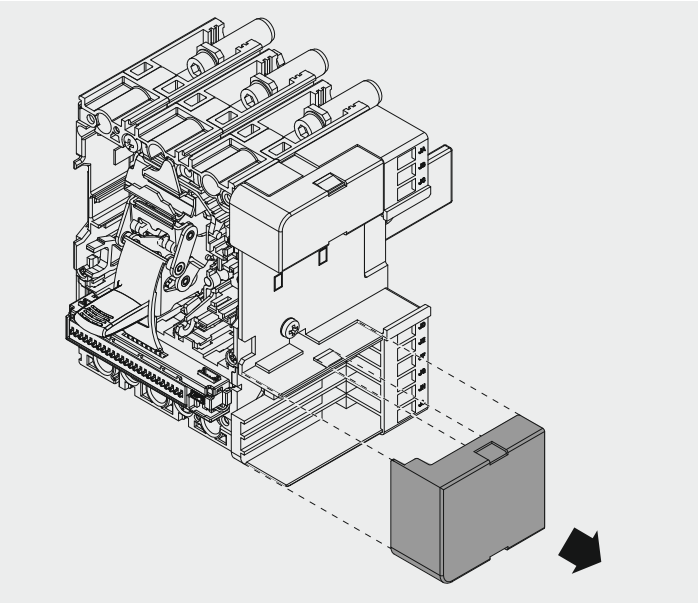

25 XT2 - XT4 W

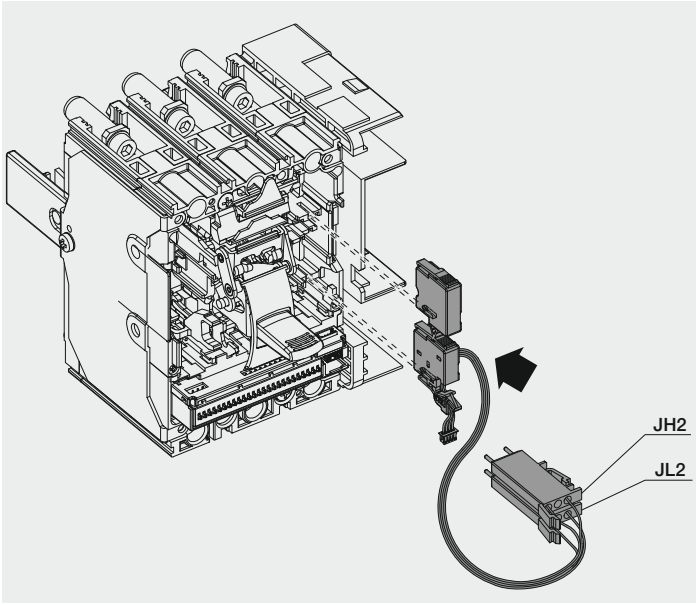

26 XT2 - XT4 W

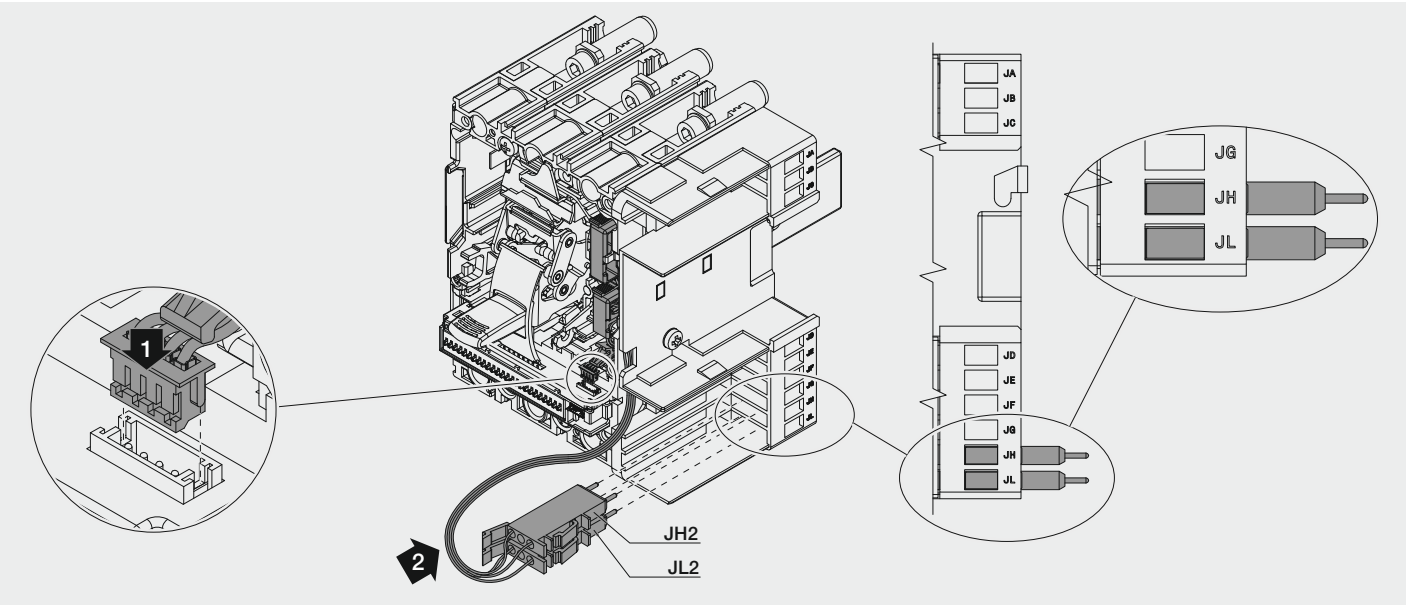

27 XT2 - XT4 W

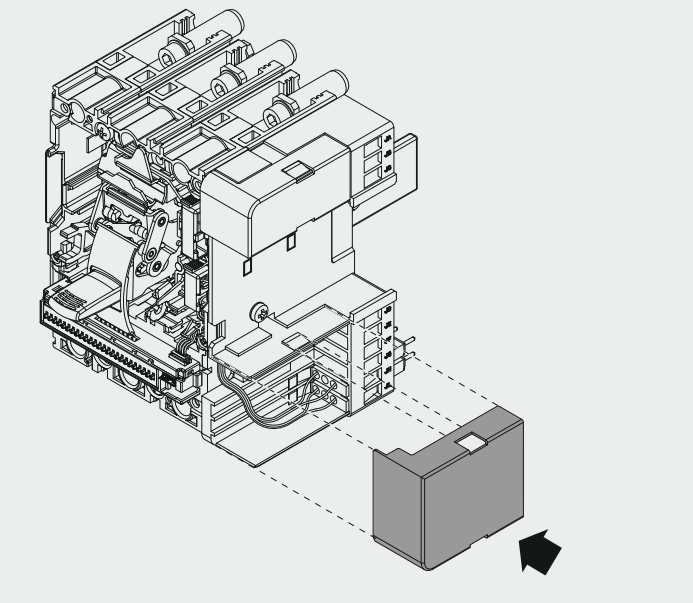

28 XT2 - XT4 W

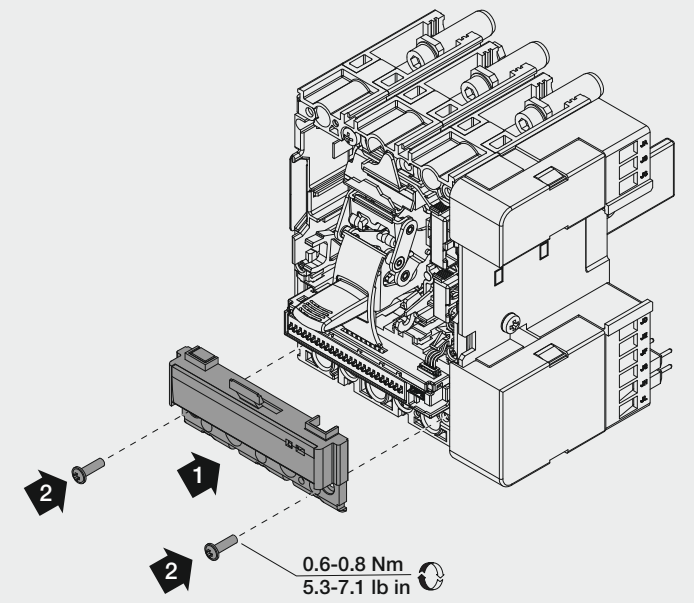

29 XT2 - XT4 W

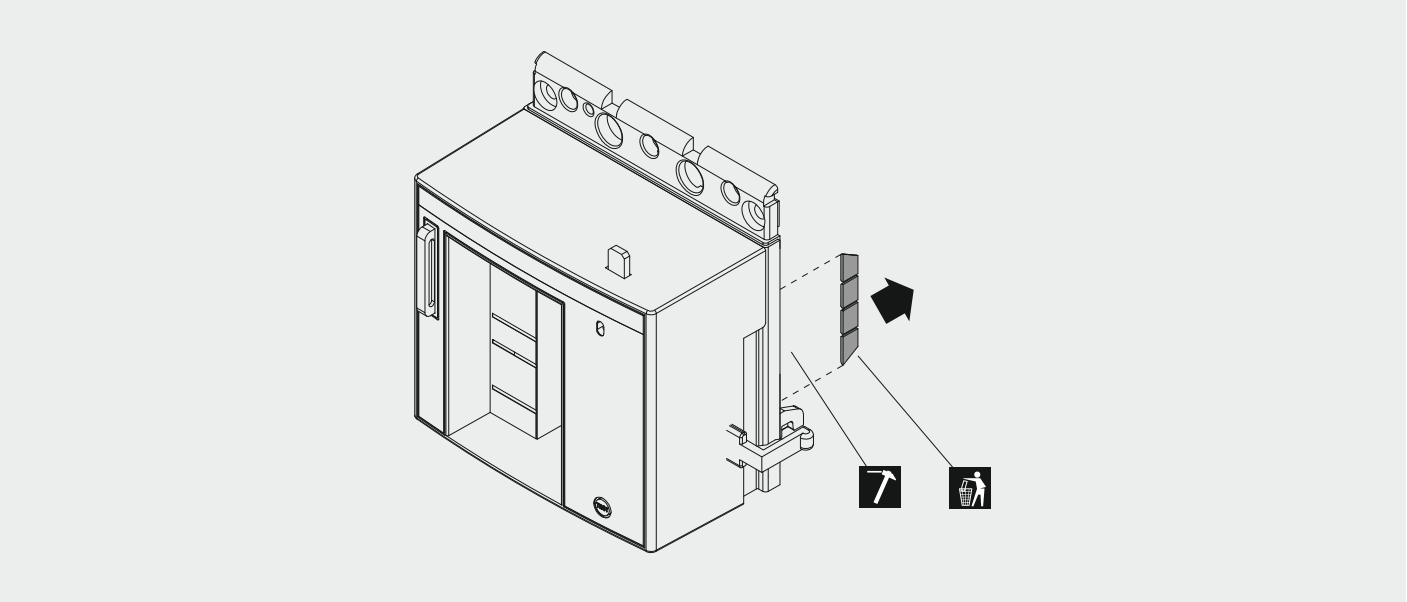

30 XT2 - XT4 W

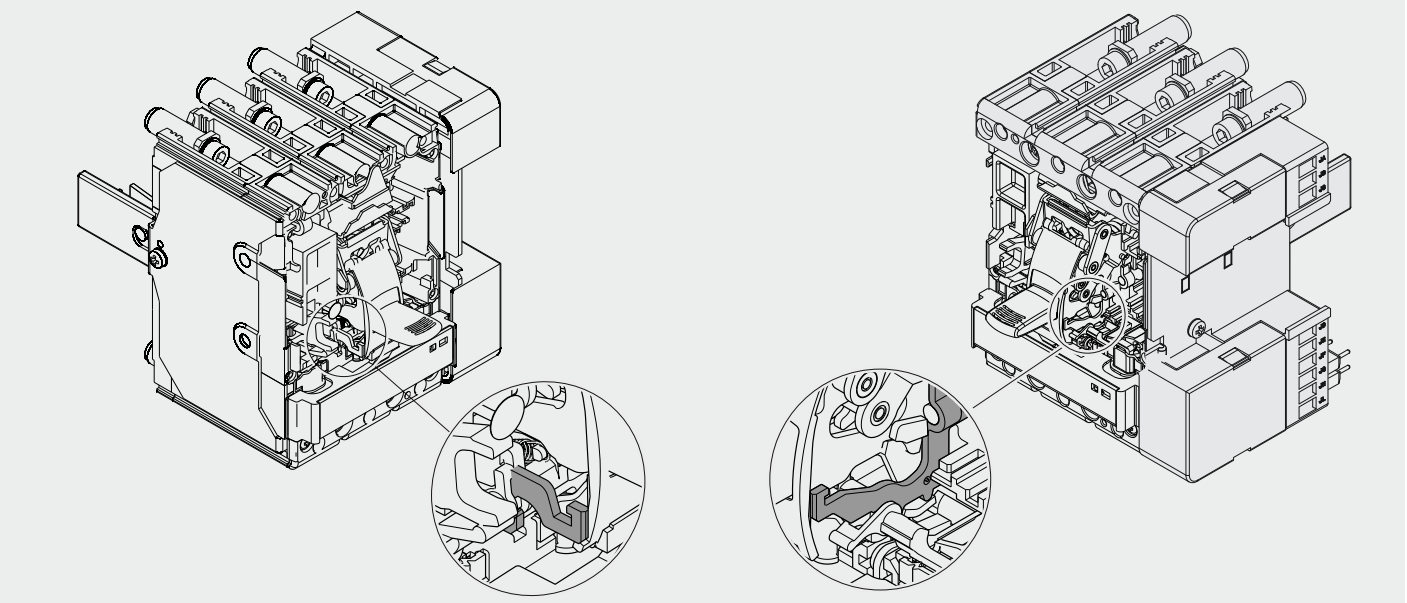

31 XT2 - XT4 W

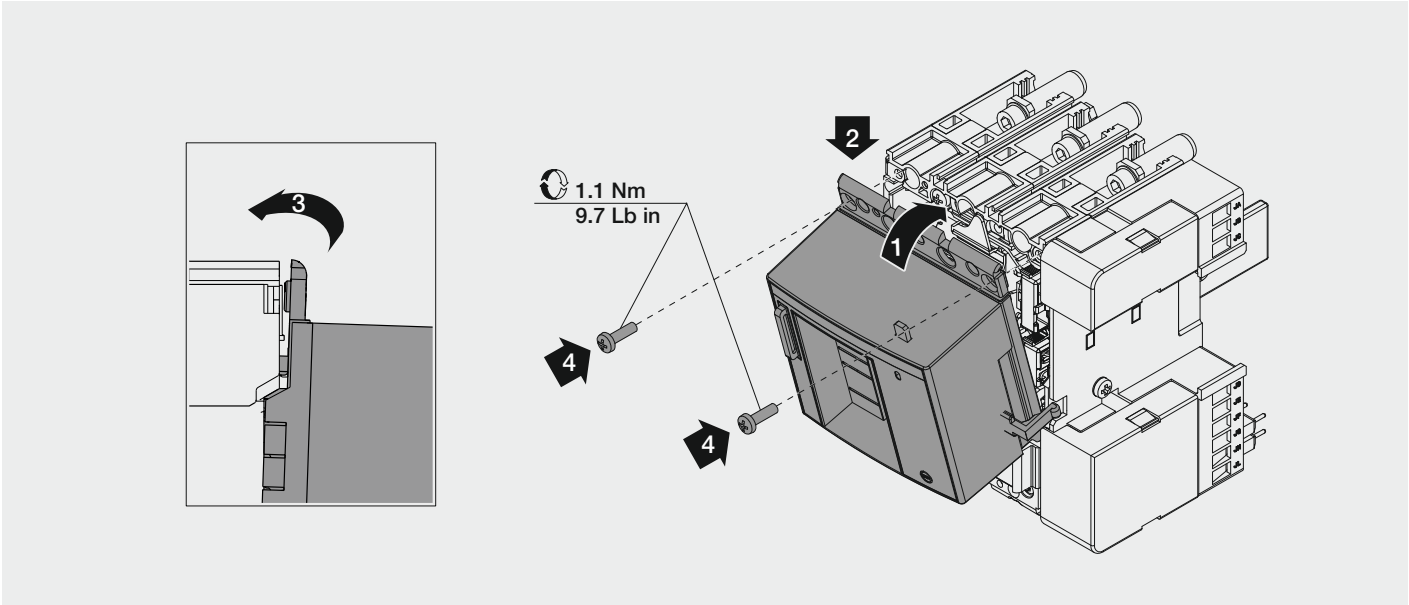

32 XT4 V - X W ONLY

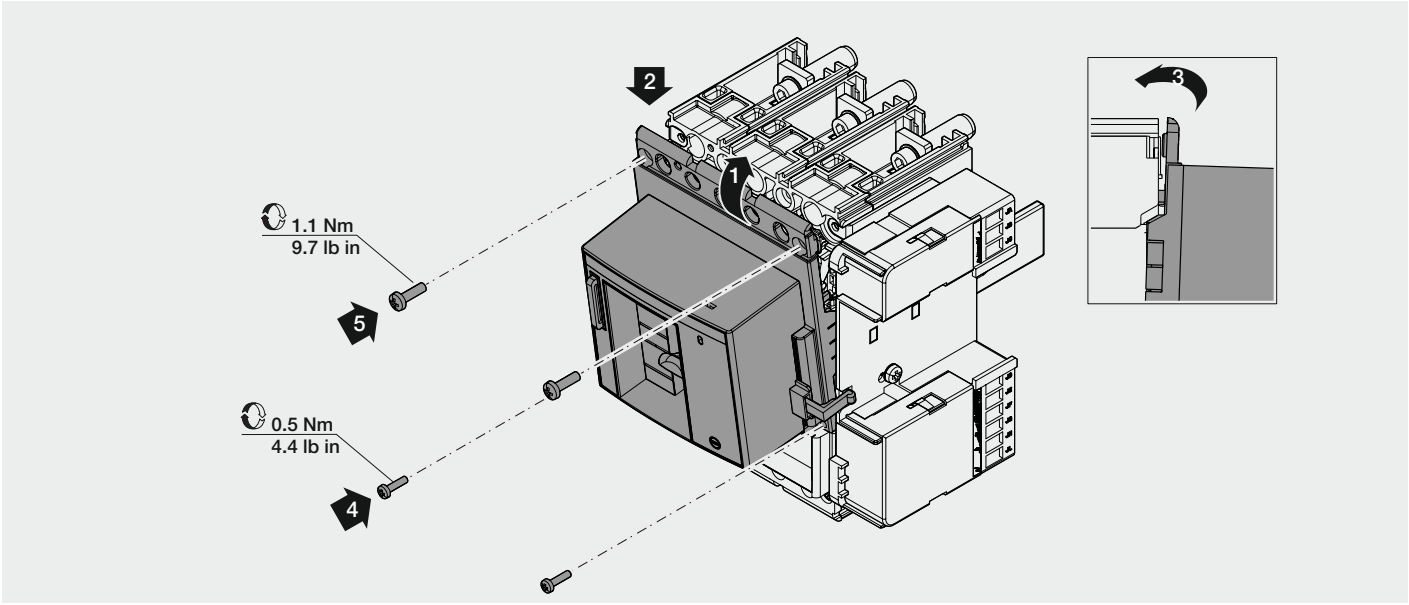

33 XT2 - XT4 W

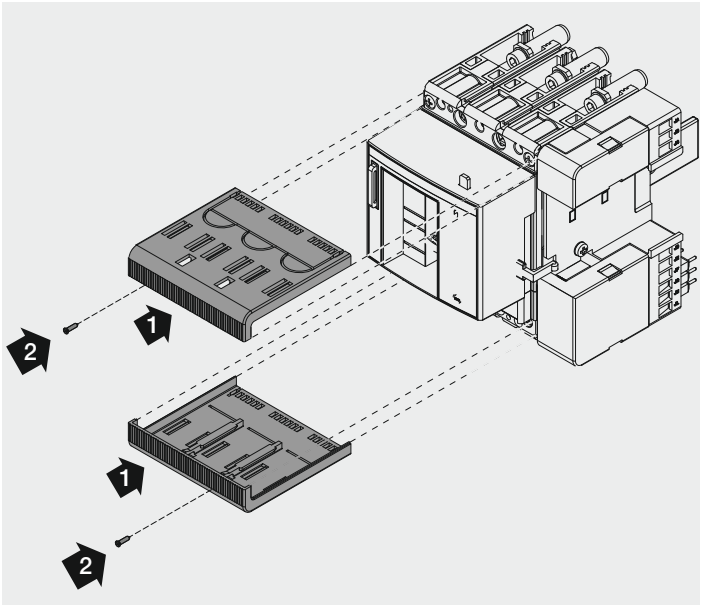

34 XT2 - XT4 W

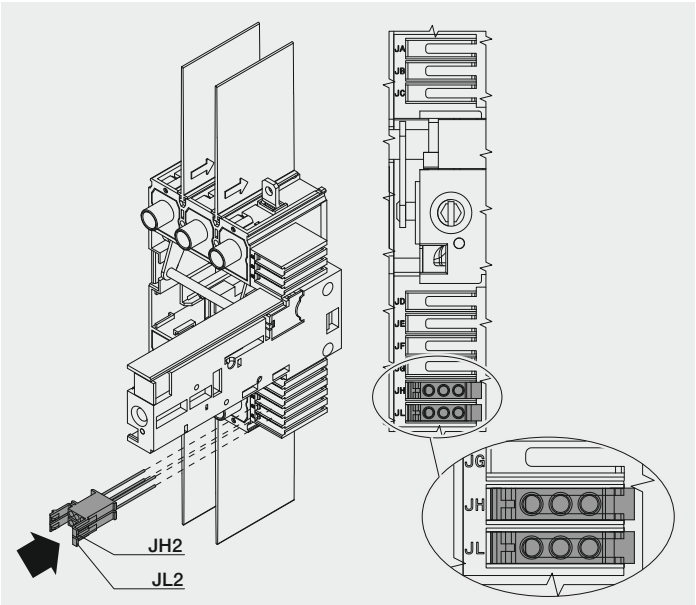

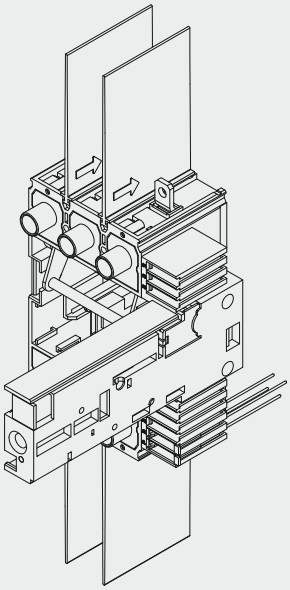

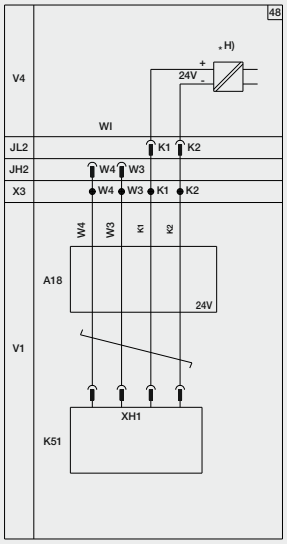

*VEDERE DOC. N° 1SDM000068R0001
*SEE DOC. N° 1SDM000068R0001
*KONSULTIEREN DAS DOK N° 1SDM000068R0001
*CONSULTER LE DOCUMENT N° 1SDM000068R0001
*CONSULTAR EL DOC N° 1SDM000068R0001
*参见文档编号 1SDM000068R0001

© Copyright 2010-2020 ABB. All rights reserved.
www.abb.com