July, 1991
Supersedes Descriptive Bulletin 41-777, pages 1-8, dated March, 1979
Mailed to: E, D, C/41-100B

Device Number: 50/62BF

Type SBF-1 Breaker Failure Relay

Description and Application

The type SBF-1 relay is a solid state relay with contact output utilizing a new concept for breaker failure protection. This new approach uses the pickup characteristic of the overcurrent unit rather than the reset characteristic as the significant ingredient for such protection.

The relay is applicable with any of the bus/breaker schemes in general use.

Provision is included in the relay for "retripping" the breaker without time delay. This may avoid clearing a bus during incorrect maintenance procedure or due to the failure of a trip contact to close.

The new approach of the SBF-1 has many advantages over the traditional ones:

(1) The device 50 will not operate before the 62BF is timed out, therefore, it will never operate when clearing normally and device 50 reset time is not a consideration.

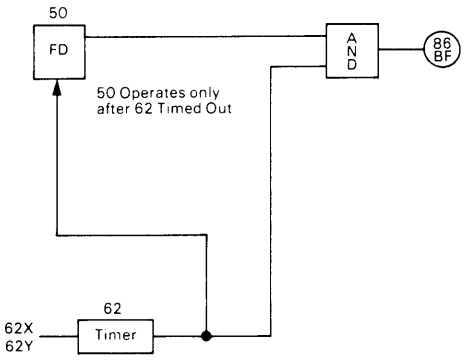

Block Diagram of the SBF-1 Relay

Detection of a fault by a protective relay provides an input (by the 62X, 62Y, or BFI contacts) to the SBF-1 relay to start the adjustable pickup timer. Until timing is completed, the overcurrent units are restrained from operation. If current is still flowing following completion of the timing, the overcurrent unit operates and trips.

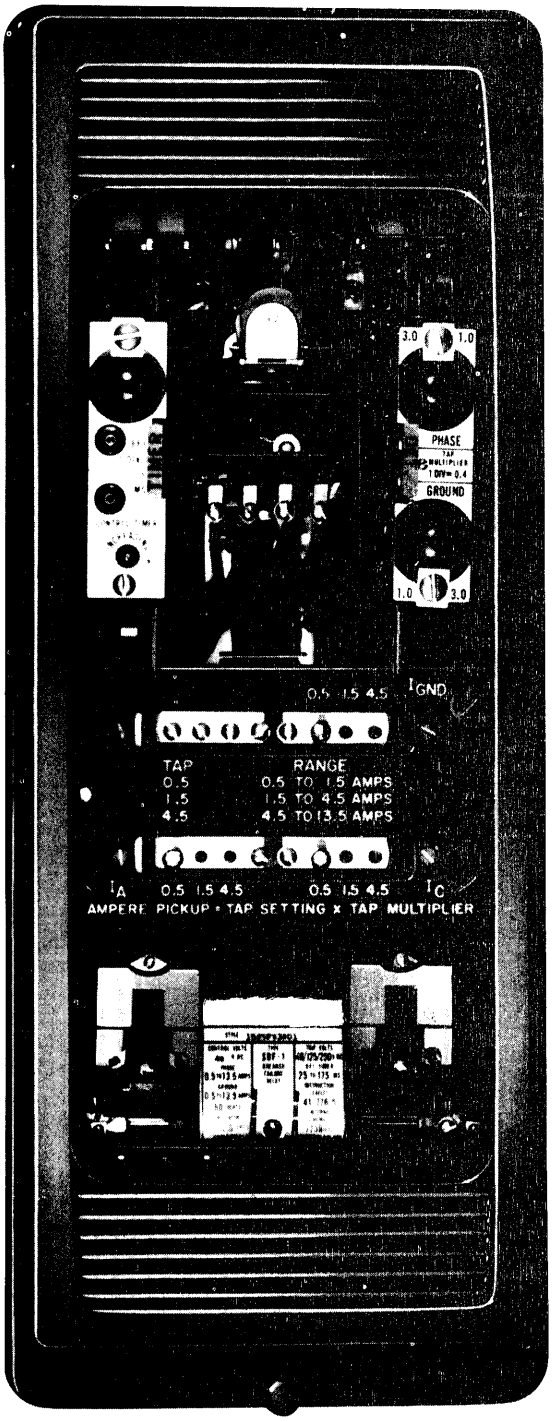

(2) It permits shorter margin and shorter overall clearing times, and will give a net saving of 1-2 cycles over the traditional approach.

(a) Traditional scheme
Total clearing time = protective relay
+ (breaker interrupting time x 2)
+ max. 50 reset time
+ margin
+ 86BF .....(A)

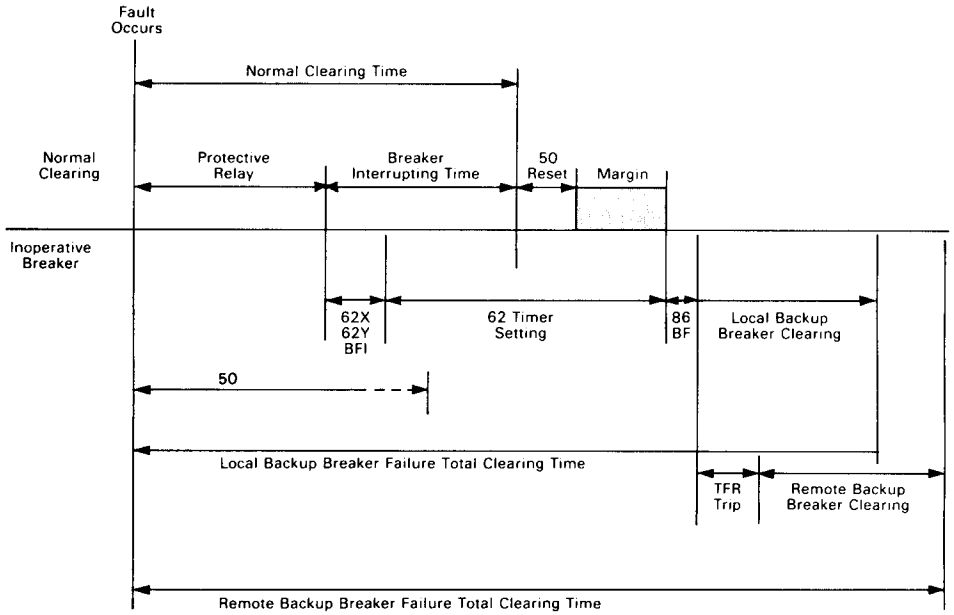

Time Chart of the Traditional Breaker Failure Scheme

(b) New scheme
Total clearing time= protective relay
+ (breaker interrupting time x 2)
+ margin
+ 86BF .....(B)

equ. (A) - (B)
(Saving in clearing time) = max. 50 reset time . . .(C).

Equ. (C) shows that the saving in total clearing time equals the device 50 max. reset time. The maximum reset time is one cycle for the SBFU relay and is 2 cycles for the KC-4 relay.

(3) The overall clearing time for the new scheme varies with fault current level. The higher the fault current, the faster the breaker failure clearing time. This is consistent with the requirements of system stability.

The pickup time of the overcurrent units in the SBF-1 relay is 3-8 millisecond for fault current level from 2-20 times its tap setting.

(4) The overcurrent unit will never operate when clearing normally so it can be set lower than load current, if necessary. This avoids delayed tripping associated with low current until other breakers clear.

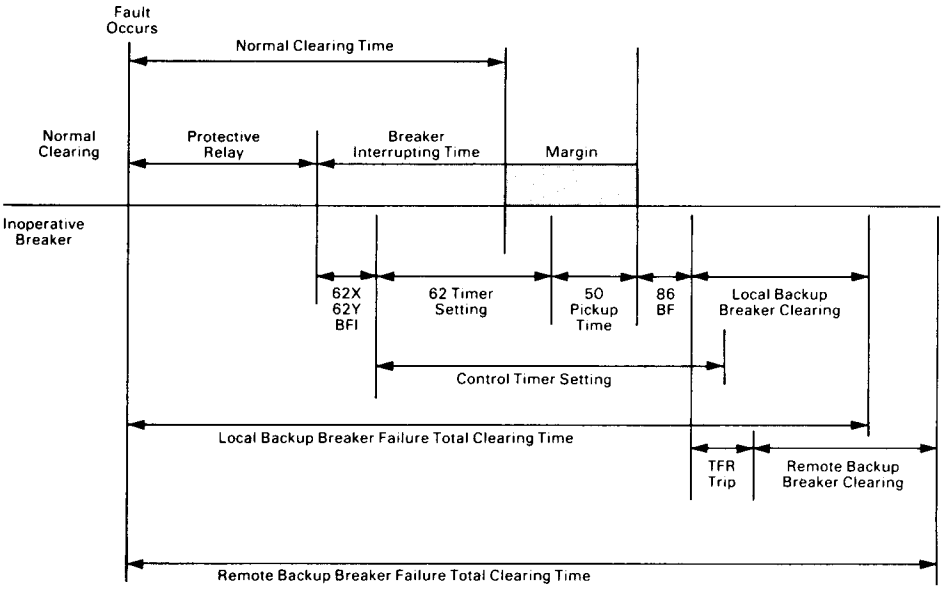

Time Chart of the SBF-1 Scheme

Operation

The operation of the SBF-1 is somewhat different than the conventional breaker failure relay. It may be summarized by saying that the breaker failure relay timer is started by only the BFI (62X) input rather than the BFI and the overcurrent fault detector. The breaker failure timer controls the fault detector so that after it times out, the overcurrent signal (if present) is connected to the level detector. This arrangement keeps the overcurrent input transformer load at a low level. Fast reset of the secondary voltage of 3 ms. or less, even at very high multiples of pickup current is permitted. By use of an additional timer (called the control timer) the breaker failure timer is reset after it times out, as well as the X seal-in relay.

Characteristics

Overcurrent unit range	0.5 to 13.5 amperes
Continuous Rating	10 Amperes (250 amperes for 1 sec.)
Pickup time of o/c units	3 (min.) to 8 (max.) ms. for current level of 2X to 20X of setting.
Breaker failure timer	18 to 175 ms. continuously adjustable
Control timer	150 to 250 ms. continuously adjustable
Battery drain (125 Vdc)	standby 0 timing 95 mA. tripping 130 mA.
Output	4 (N.O.) AR contact outputs, with 2 ICS, one telephone relay contact can replace an AR contact for retrip function.
Seal-in	Telephone relay contact seal-in for (1) BFI contact bounce, (2) Close-in 3-phase fault when memory action of the distance relay is decayed.
Voltage level detector	To restrain the relay from operating if dc supply voltage is below 60% of its rated value.
dc input operate range	80 to 110% of rated. Max. Continuous input 110% of rated.
Operate temperature range	− 20° to + 55°C

Simplified Internal Schematic

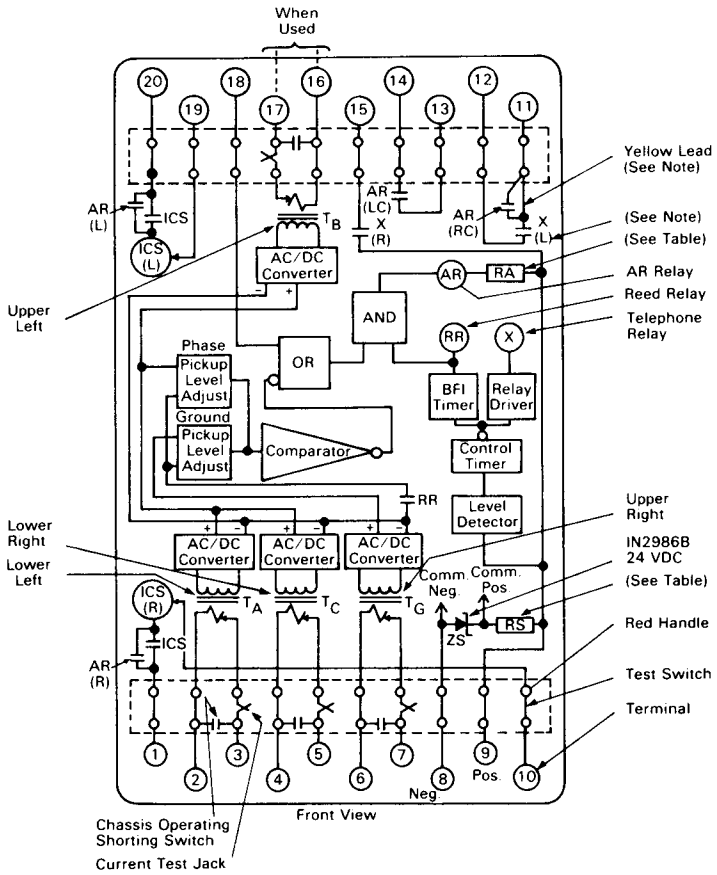

Figure 1. Simplified Internal Schematic Type SBF-1

Sub 2
775B813

Notes:

To obtain AR contact output move yellow lead from terminal 11 to terminal 12.

(L), (R), (LC) & (RC) denote left hand, right hand, left center & right center positions.

25W Resistors

Volts DC	RA	RS
48	900Ω	200Ω
125	3150Ω	1000Ω
250	7100Ω	2500Ω

Further Information

List Prices: PL 41-020
Technical Data: TD 41-025
Instructions: IL 41-776.5
Flexitest Case Dimensions: DB 41-076
Other Protective Relays:
Application Selector Guide, TD 41-016

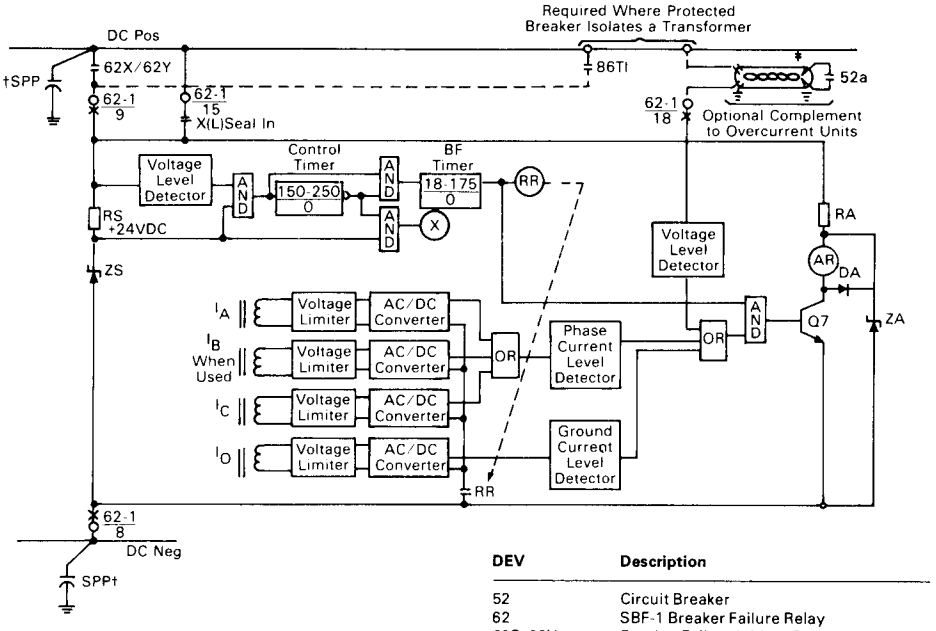

DEV	Description
52	Circuit Breaker
62	SBF-1 Breaker Failure Relay
62S, 62Y	Breaker Failure Initiate Contacts
86BF	Breaker Failure Lockout Relay
86TI	Transformer Lockout Relay

Figure 2. DC External Connection for Type SBF-1 Breaker Failure Relay 1464C78

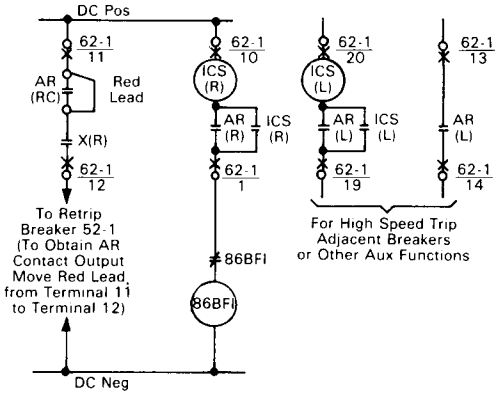

Typical 86BF and/or Relay Aux Functions

1. Trip Breakers connected to same bus section.
2. Block all automatic reclosing.
3. Block manual closing.
4. Key transfer trip transmitters to trip remote breakers and block reclosing.
5. Stop "Blocking" carrier.

†SPP surge protection capacitor to be used when surge voltage may exceed 2500 volts peak

‡When surge voltage may exceed 2500 volts peak use shielded control cable & ground both ends per switchyard runs where surge voltage may exceed 2500 volts rear.

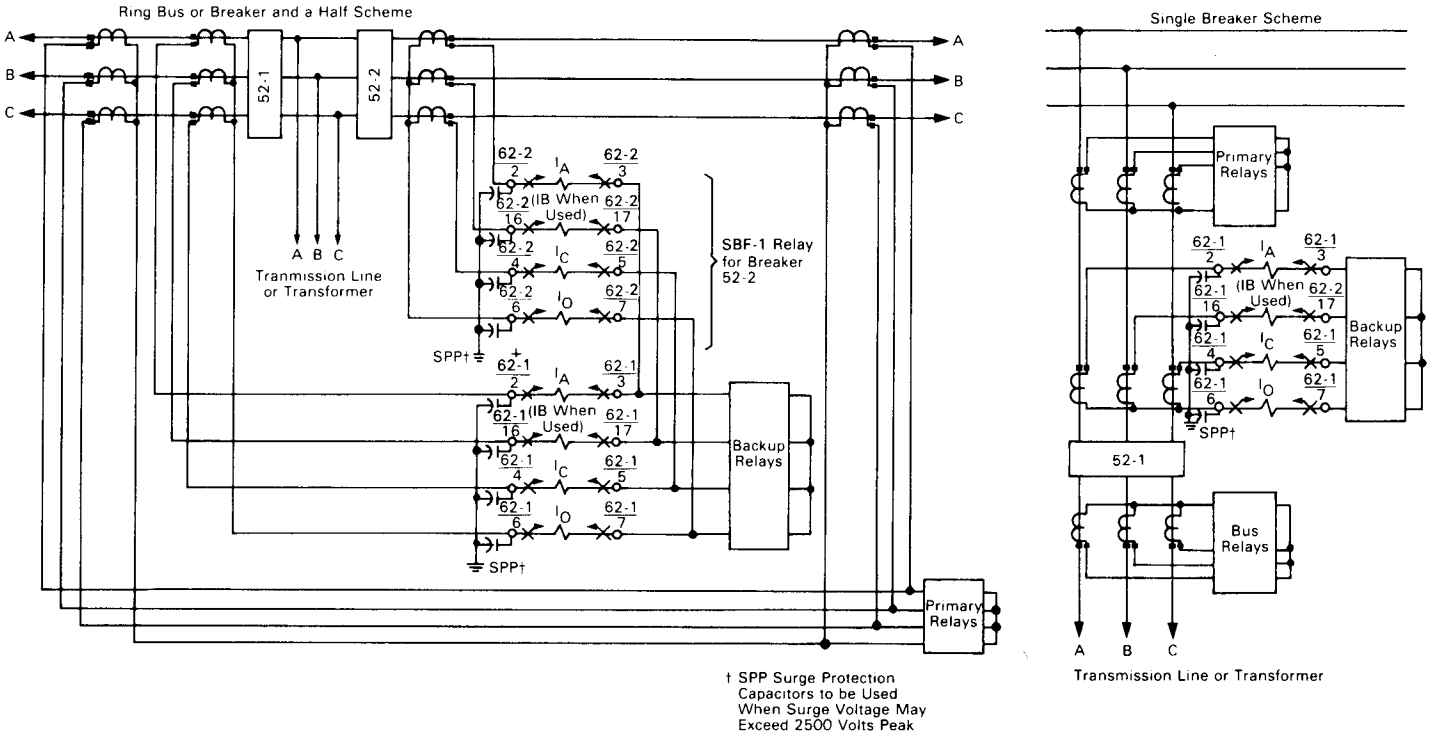

DEV	Description
52	Circuit Breaker
62	SBF-1 Breaker Failure Relay

Figure 3. AC External Connection for Type SBF-1 Breaker Failure Relay 1464C77

Printed in U.S.A.

July, 1991
Supersedes TD 41-020, Type SBF-1 on page 37, dated November, 1987
Mailed to: E, D, C/41-100B

Type SBF-1 Breaker Failure Relay

Breaker Failure Relay, Solid State, Contact Output (Device Number: 50/62 BF)

Type	Current Range	BFI Timer	Control Timer	No. of Overcurrent Units	Control Voltage	Indicating Contactor Switch ③	Tripping Voltage Dc	Internal Schematic	Style Number	Case Size
SBF-1 (utilizes AR Relay Output)	0.5-13.5A	25-175 ms	150-250 ms	3	48 Vdc	2 ICS Units/relay 0.2/2.0 amp dc	48/125/250	775B813	1529F93A01	**FT-32**
					125 Vdc				1529F93A02 ⑤	
					250 Vdc				1529F93A03	
		50-500 ms	150-600 ms	3	48 Vdc				1529F93A17	
					125 Vdc				1529F93A07	
					250 Vdc				1529F93A15	
	.05-1.3A	25-175 ms	150-250 ms	3	48 Vdc			1487B31	1529F93A08	
					125 Vdc				1529F93A09	
					250 Vdc				1529F93A10	
		50-500 ms	150-600 ms	3	125 Vdc				1529F93A13	
	0.5-13.5A	25-175 ms	150-250 ms	4	48 Vdc			775B813	1529F93A04	
					125 Vdc				1529F93A05 ⑤	
					250 Vdc				1529F93A06	
		50-500 ms	150-600 ms	4	48 Vdc				1529F93A14	
					125 Vdc				1529F93A12	
					250 Vdc				1529F93A16	
		100-1000 ms	200-1100 ms	4	125 Vdc				1529F93A11	

⑤ Denotes item available from stock.

③ ICS: Indicating Contactor Switch (dc current operated) having seal-in contacts and indicating target which are actuated when the ICS coil is energized at or above pickup current setting. Suitable for dc control voltages up to and including 250 volts dc. Two current ranges are available:
(1) 0.2/2.0 amps dc, with tapped coil.
(2) 1.0 amp dc, without taps.

Rating of ICS unit used in specific types of relays is shown in price tables. All other ratings must be negotiated.

When ac current is necessary in a control trip circuit, the ICS unit can be replaced by an ACS unit.

The ACS unit may be supplied in place of an ICS unit at no additional cost. Specify system voltage rating on order.