ABB
ASEA BROWN BOVERI

ABB Network Control
& Protection

Type RANZA
Line fault locator

1MDB06015–EN
Page 1
March 1992
Changed since August 1990
Data subject to change without notice

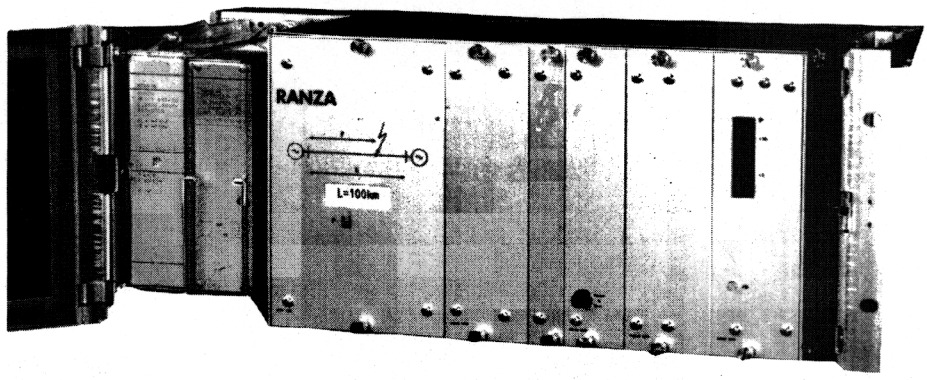

(822854)

Features

- **Required in only one of the line section ends**
- **Calculates the distance to the fault with high accuracy when initiated at line relay trip**
- **Easy to install, uses existing current and voltage transformers, small panel space required**
- **High accuracy due to microprocessor controlled memory storing of A/D–converted measuring values, filtered prior to the processing of the fault distance calculation**
- **Used calculation method is not influenced by**
  - **fault current infeed from remote line end**
  - **line loading prior to fault**
  - **magnitude of fault resistance**
- **Cooperates with any line relay**
- **A LED–indicator provides indication of the distance to the fault in percentage of supervised line length**
- **Outputs provided for telemetering and local printout of fault distance**
- **Self monitoring**
- **Pre–fault and fault magnitudes of currents and voltages with phase–angles can be printed out at line trip**
- **Line and source impedance data set via five thumbwheel switches**
- **Zero sequence mutual coupling compensation**

Application

The RANZA fault locator accurately measures the distance to a line fault, independent of the type of fault on the system e.g. single– or multi–phase. RANZA is used in conjunction with line protective relays having phase selection capability. Depending on the type of fault, a measuring loop is selected to solve the general fault location equation.

RANZA is also available in a variant with built in phase selection.

Under normal conditions, RANZA monitors the three phase and earth current and voltage input signals, continuously sampling and storing *13,5* cycle values in its memory.

Measured values can at any time, by pressing the pushbutton in the front, be printed out. A suitable printer can be found under the section Ordering.

When a fault occurs, a trip pulse from the protection relay initiates the calculation program, which then (along with control signals indicating the type of fault) uses both pre–fault and fault sample values to determine the fault distance.

The fault distance is shown in percentage of total line length on the two digit front–mounted LED display. Two communication interface outputs are also provided for transmitting the calculated fault distance. One is a 20 mA current loop for use with a local alpha–numeric printer, the other, an eight–bit BCD contact output, for remote transmission of information to a system control centre via communication link.

Application (cont'd)

A typical application of RANZA is shown below.

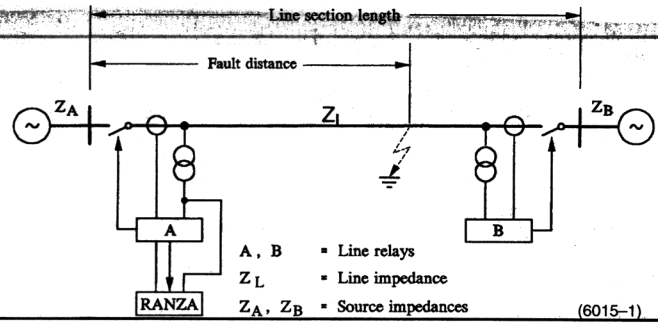

The figure illustrates the required connections to voltage and current transformers, control signals from the line relay, as well as the network data for setting. The parameters set into the locator via the five thumbwheel switches are the positive and zero sequence line impedance and the positive sequence source impedances.

If the necessary starting control signals for RANZA are not available from the existing line relay, an additional initiating unit can be provided to cover this function. A test program is included and can be initiated while the locator is in service.

Design

Fault locator RANZA comprises a test switch *(RTXP 18)*, a dc–dc converter *(RXTUG 21H)*, a transformer unit *(RTTI 150)*, a shunt unit *(RTMA)*, an input unit *(RGKE 070)*, a measuring unit *(RGGC 070)*, a setting unit *(RGSE 050)* and an output unit *(RGSF 070)*.

The main parts of the measuring unit are an A/D–converter, a microprocessor and memory circuits for operating programs and storing of measured values.

The A/D converter converts the analog input signals to digital signals, which are stored continuously in the memory during 13.5 cycles, after which new values are stored. The storing continues as long as the line section is unfaulted, but also, in case of a fault, some cycles during the fault. Consequently, the measured values, prior to and during the fault, are available in the memory for filtering and microprocessor calculation at line trip.

RANZA is mounted on apparatus bars and occupies 60C in a 19", 4U equipment frame or in an RHGX 20 case.

Technical data

Rated frequency, f_n	50 or 60 Hz
Rated ac voltage, U_n	110 V 110 V + 10% at 50 Hz 130 V +10% at 60 Hz
Rated ac current, I_n	1, 2 or 5 A
Overload capacity Continuously During 1 s	 maximum 3 · I_n 100 · I_n, max. 350 A
Auxiliary dc voltage, EL	24–36, 48–60 or 110–250 V +10% –20%
Input signal dc voltage, RL	24, 48–55, 110–125, 220 or 250 V
Phase selection and start	Internal phase selection Alt. external from line relay
Minimum required measuring time	1 1/2 cycles
Calculating time	< 15 sec.
Setting range Operate range	0.0–999.9 ohms/phase (0.1–20) · I_n (0.01–1.5) · U_n
Inaccuracy in measuring	< 2% at reference value of I_n and U_n at 80° lagging

Telemetry output Local printer output	24 V, 0.1 A 24 V, 20 mA from an external source. (Maximum 250 V with series resistor) 20 columns ASCII, 300 baud
Power consumption: Current and voltage circuits	 < 1 VA/phase
Auxiliary voltage EL	< 14 W
Insulation tests: Dielectric test Voltage circuits Current circuits	 50 Hz, 2.0 kV, 1 min 50 Hz, 2.5 kV, 1 min
Impulse voltage test	1.2/50 µs, 5.0 kV, *0.5 J*, 2 min
Disturbance Tests: Power frequency test	 50 Hz, 0.5 kV, 2 min
Fast transient test 1 MHz burst test	4–8 kV, 2 min 2.5 kV, 2 s
Permitted ambient temperature	0°C to +55°C
Dimensions	4U 60C (170 · 360 mm)
Weight	12 kg

Terminal diagram

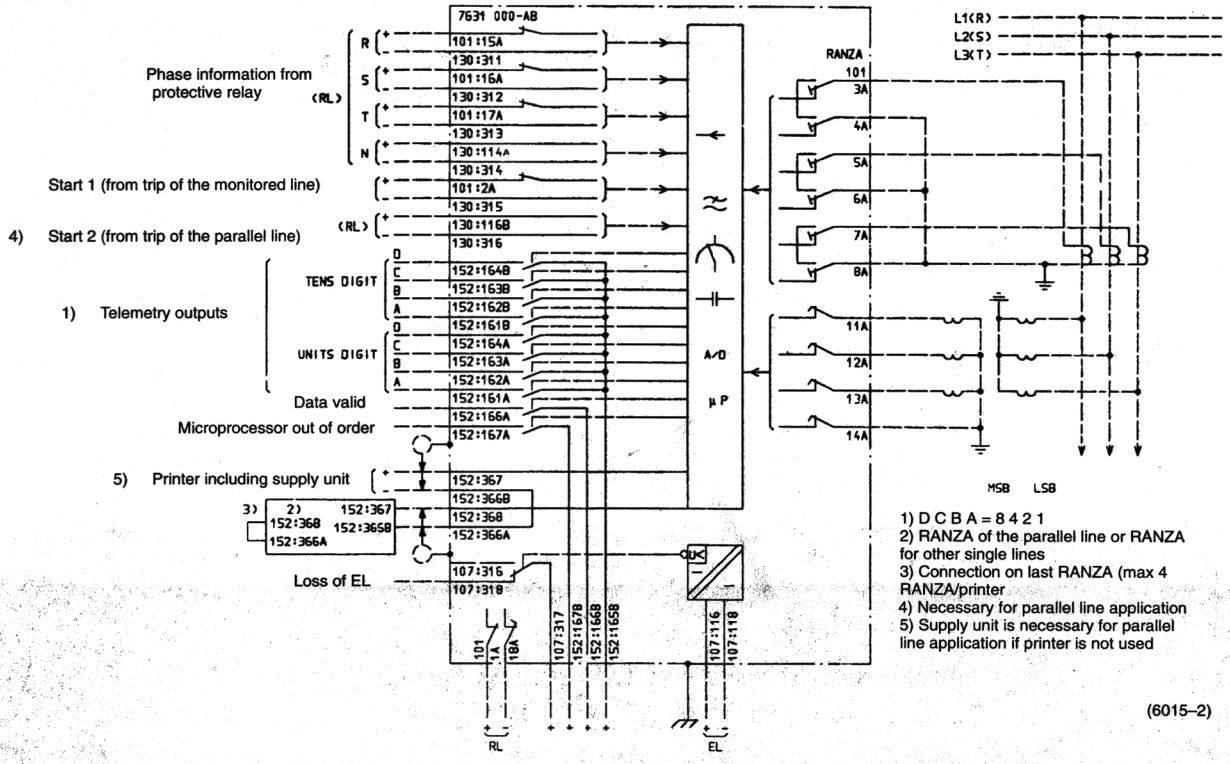

Fig. 1 Terminal diagram 7631 000–ABA. Basic version

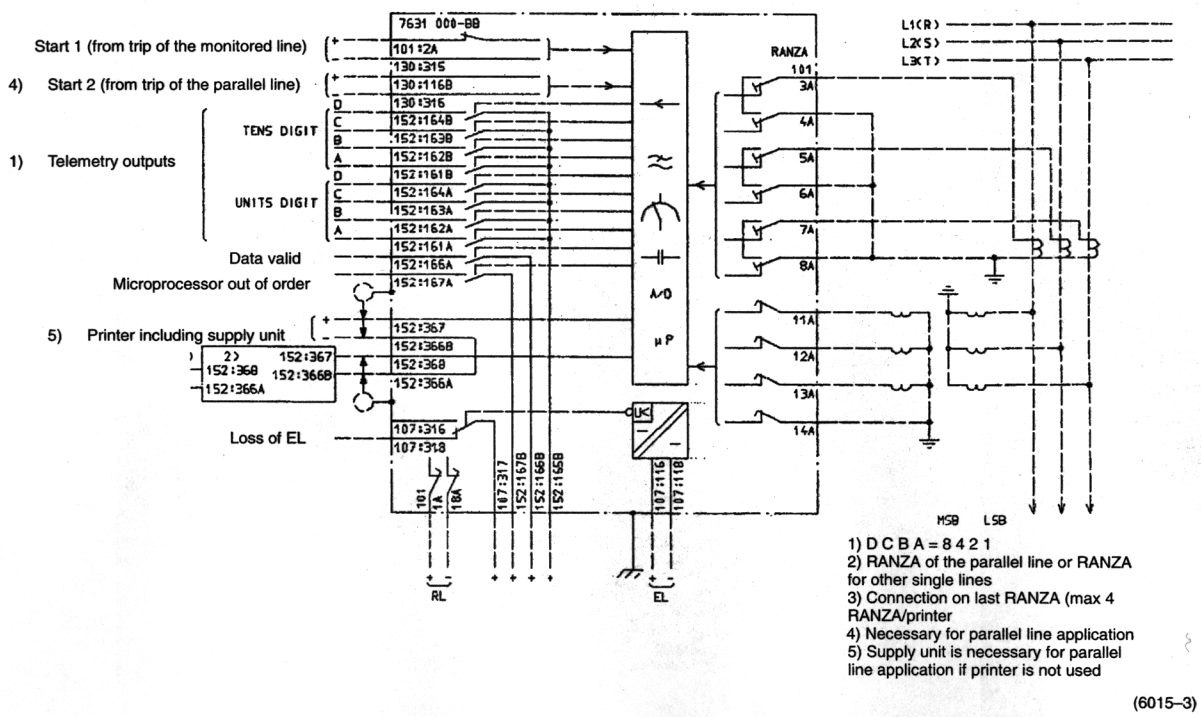

Fig. 2 Terminal diagram 7631 000–BBA. Version with internal phase selection

Ordering

Specify:
- Type RANZA
- Quantity
- Ordering No. (see table below)
- Rated frequency, f_n
- Rated ac voltage, U_n
- Auxiliary dc voltage, EL
- Rated ac current, I_n
- Control signal dc voltage, RL
- Desired wording on the test switch face plate. Maximum 10 lines with 10 characters/line

- Printer RTRS 180 and dc/dc converter RXTUG 21H mounted on apparatus bars for local printout of measured and calculated values. One printer can be shared by four RANZA. Ordering No. RK 791000–AA (4U 30C).

Mounting:
- For mounting and connection, see Mounting systems, 1MDB14003–EN.

Ordering No.		Terminal diagram
RK 881 023–AB	Basic version	7631 000–ABA
RK 881 023–BB	Version with internal phase selection	7631 000–BBA

Sample specification

Fault locator for overhead line faults with high accuracy, independent of line loading. The fault locator shall be provided with a test switch and front indication of distance to fault.

The magnitude of fault resistance shall not influence the accuracy of the fault distance measuring.

Reference

User's Guide *1MDU06015–EN*