Relion® 670 series

Bay control REC670
Installation and commissioning manual

Power and productivity
for a better world™

Document ID: 1MRK 511 189-UEN
Issued: June 2010
Revision: C
Product version: 1.1

Copyright

Trademarks

Warranty

Please inquire about the terms of warranty from your nearest ABB representative.

ABB AB

Substation Automation Products

SE-721 59 Västerås

Sweden

Telephone: +46 (0) 21 32 50 00

Facsimile: +46 (0) 21 14 69 18

http://www.abb.com/substationautomation

Disclaimer

The data, examples and diagrams in this manual are included solely for the concept or product description and are not to be deemed as a statement of guaranteed properties. All persons responsible for applying the equipment addressed in this manual must satisfy themselves that each intended application is suitable and acceptable, including that any applicable safety or other operational requirements are complied with. In particular, any risks in applications where a system failure and/or product failure would create a risk for harm to property or persons (including but not limited to personal injuries or death) shall be the sole responsibility of the person or entity applying the equipment, and those so responsible are hereby requested to ensure that all measures are taken to exclude or mitigate such risks.

This document has been carefully checked by ABB but deviations cannot be completely ruled out. In case any errors are detected, the reader is kindly requested to notify the manufacturer. Other than under explicit contractual commitments, in no event shall ABB be responsible or liable for any loss or damage resulting from the use of this manual or the application of the equipment.

Conformity

This product complies with the directive of the Council of the European Communities on the approximation of the laws of the Member States relating to electromagnetic compatibility (EMC Directive 2004/108/EC) and concerning electrical equipment for use within specified voltage limits (Low-voltage directive 2006/95/EC).

This conformity is proved by tests conducted by ABB AB in accordance with the generic standard EN 50263 for the EMC directive, and with the standards EN 60255-5 and/or EN 50178 for the low voltage directive.

This product is designed and produced for industrial use.

Table of contents

Table of contents

Section 1 Introduction

About this chapter

This chapter introduces the user to the manual.

1.1 Introduction to the installation and commissioning manual

1.1.1 About the complete set of manuals for an IED

The user's manual (UM) is a complete set of five different manuals:

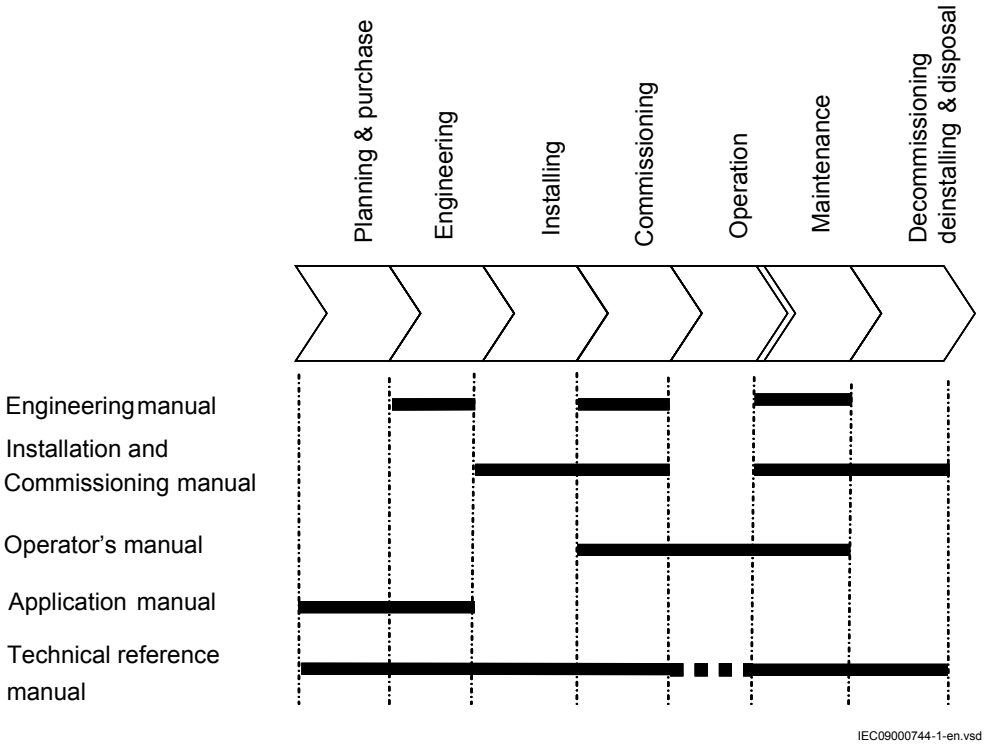

The Application Manual (AM) contains application descriptions, setting guidelines and setting parameters sorted per function. The application manual should be used to find out when and for what purpose a typical protection function could be used. The manual should also be used when calculating settings.

The Technical Reference Manual (TRM) contains application and functionality descriptions and it lists function blocks, logic diagrams, input and output signals,

setting parameters and technical data sorted per function. The technical reference manual should be used as a technical reference during the engineering phase, installation and commissioning phase, and during normal service.

The Installation and Commissioning Manual (ICM) contains instructions on how to install and commission the protection IED. The manual can also be used as a reference during periodic testing. The manual covers procedures for mechanical and electrical installation, energizing and checking of external circuitry, setting and configuration as well as verifying settings and performing directional tests. The chapters are organized in the chronological order (indicated by chapter/section numbers) in which the protection IED should be installed and commissioned.

The Operator's Manual (OM) contains instructions on how to operate the protection IED during normal service once it has been commissioned. The operator's manual can be used to find out how to handle disturbances or how to view calculated and measured network data in order to determine the cause of a fault.

The Engineering Manual (EM) contains instructions on how to engineer the IEDs using the different tools in PCM600. The manual provides instructions on how to set up a PCM600 project and insert IEDs to the project structure. The manual also recommends a sequence for engineering of protection and control functions, LHMI functions as well as communication engineering for IEC 61850 and DNP3.

1.1.2 About the installation and commissioning manual

The installation and commissioning manual contains the following chapters:

- The chapter Safety information presents warning and note signs, that the user should pay attention to.
- The chapter Overview is a summary of the major tasks faced when installing and commissioning an IED.
- The chapter Unpacking and checking the IED explains how to take delivery of the IED.
- The chapter Installing the IED explains how to install the IED.
- The chapter Checking the external optical and electrical connections explains how to check that the IED is properly connected to the protection system.
- The chapter Energizing the IED explains how to start the IED.
- The chapter Set up PCM 600 communication link per IED describes the communication between PCM600 and the IED.
- The chapter Establishing connection and verifying the SPA/IEC-communication contains explains how to enter SPA/IEC settings and verifying the communication.
- The chapter Establishing connection and verifying the LON communication contains a reference to another document.
- The chapter Establishing connection and verifying the IEC 61850 communication contains explains how to enter IEC 61850 settings and verifying the communication.
- The chapter Configuring the IED and changing settings " explains how to write settings and configure the IED.

- The chapter Verifying settings by secondary injection contains instructions on how to verify that each included function operates correctly according to the set values.
- The chapter Commissioning and maintenance of the fault clearing system discusses maintenance tests and other periodic maintenance measures.
- The chapter Fault tracing and repair explains how to troubleshoot.
- The chapter Glossary is a list of terms, acronyms and abbreviations used in ABB technical documentation.

1.1.3 Intended audience

General

The installation and commissioning manual addresses the personnel responsible for the installation, commissioning, maintenance and taking the protection in and out of normal service.

Requirements

The installation and commissioning personnel must have a basic knowledge in handling electronic equipment. The commissioning and maintenance personnel must be well experienced in using protection equipment, test equipment, protection functions and the configured functional logics in the protection.

1.1.4 Related documents

Documents related to REC670	Identity number
Operator's manual	1MRK 511 188-UEN
Installation and commissioning manual	1MRK 511 189-UEN
Technical refernce manual	1MRK 511 187-UEN
Application manual	1MRK 511 190-UEN
Buyer's guide	1MRK 511 192-BEN
Sample specification	SA2005-001280
Connection diagram, Single breaker	1MRK 002 801-FA
Connection diagram, Double breaker	1MRK 002 801-MA
Connection diagram, 1 1/2 CB	1MRK 002 801-NA
Configuration diagram A, Single breaker arr. with single or double busbar	1MRK 004 500-90
Configuration diagram B, Double breaker arrangements	1MRK 004 500-91
Configuration diagram C, 1 1/2 breaker arr. for a full bay	1MRK 004 500-92
Connection and Installation components	1MRK 513 003-BEN
Test system, COMBITEST	1MRK 512 001-BEN
Accessories for IED 670	1MRK 514 012-BEN
Getting started guide IED 670	1MRK 500 080-UEN

Table continues on next page

SPA and LON signal list for IED 670, ver. 1.1	1MRK 500 083-WEN
IEC 61850 Data objects list for IED 670, ver. 1.1	1MRK 500 084-WEN
Generic IEC 61850 IED Connectivity package	1KHA001027-UEN
Protection and Control IED Manager PCM 600 Installation sheet	1MRS755552
Engineering guide IED 670 products	1MRK 511 179-UEN

More information can be found on www.abb.com/substationautomation.

1.1.5 Revision notes

Revision	Description
C	No functionality added. Changes made in content due to problem reports.

Section 2 Safety information

About this chapter

This chapter contains safety information. Warning signs are presented which urge the user to be careful during certain operations in order to avoid injuries to humans or damage to equipment.

2.1 Warning signs

Strictly follow the company and country safety regulations. Working in a high voltage environment requires serious approach to avoid human injuries and damage to equipment.

Do not touch circuitry during operation. Potentially lethal voltages and currents are present.

Always avoid touching the circuitry when covers are removed. The product contains electronic circuits which can be damaged if exposed to static electricity (ESD). Lethal high voltage circuits are also exposed when covers are removed.

Always use suitable isolated test pins when measuring signals in open circuitry. Potentially lethal voltages and currents are present.

Never connect or disconnect a wire and/or a connector to or from a IED during normal operation. Hazardous voltages and currents are present that may be lethal. Operation may be disrupted and IED and measuring circuitry may be damaged.

Always connect the IED to protective earth, regardless of the operating conditions. This also applies to special occasions such as bench testing, demonstrations and off-site configuration. Operating the IED without proper earthing may damage both IED and measuring circuitry and may cause injuries in case of an accident.

Never disconnect the secondary connection of current transformer circuit without short-circuiting the transformer's secondary winding. Operating a current transformer with the secondary winding open will cause a massive potential build-up that may damage the transformer and may cause injuries to humans.

Never remove any screw from a powered IED or from a IED connected to powered circuitry. Potentially lethal voltages and currents are present.

Take adequate measures to protect the eyes. Never look into the laser beam.

2.2 Caution signs

Always transport PCBs (modules) using certified conductive bags. Always handle modules using a conductive wrist strap connected to protective ground and on a suitable antistatic surface. Electrostatic discharge (ESD) may cause damage to the module since electronic circuits are sensitive to this phenomena.

Do not connect live wires to the IED. Internal circuitry may be damaged

Always use a conductive wrist strap connected to protective ground when replacing modules. Electrostatic discharge (ESD) may damage the module and IED circuitry.

Take care to avoid electrical shock if accessing wiring and connection IEDs when installing and commissioning.

Changing the active setting group will inevitably change the IEDs operation. Be careful and check regulations before making the change.

2.3 Note signs

The protection assembly is designed for a maximum continuous current of four times rated value.

Section 3 Overview

About this chapter

This chapter outlines the installation and commissioning of the IED.

3.1 Commissioning and installation overview

The settings for each function must be calculated before the commissioning task can start. A configuration, done in the configuration and programming tool, must also be available if the IED does not have a factory configuration downloaded.

The IED is unpacked and visually checked. It is preferably mounted in a cubicle or on a wall. The connection to the protection system has to be checked in order to verify that the installation is successful.

Section 4 Unpacking and checking the IED

About this chapter

This chapter describes the delivery and the unpacking of the IED

4.1 Taking delivery, unpacking and checking

Procedure

1. Remove the transport casing.
2. Visually inspect the IED.
3. Check that all items are included in accordance with the delivery documents. Once the IED has been started make sure that the software functions ordered have been included in the delivery.
4. Check for transport damages.
   If transport damage is discovered appropriate action must be taken against the latest carrier and the nearest ABB office or representative should be informed. ABB should be notified immediately if there are any discrepancies in relation to the delivery documents.
5. Storage
   If the IED is to be stored before installation, this must be done in the original transport casing in a dry and dust free place. Observe the environmental requirements stated in the technical data.

Section 5 Installing the IED

About this chapter

This chapter describes how to install the IED.

5.1 Overview

The mechanical and electrical environmental conditions at the installation site must be within the limits described in the IED technical data. Dusty, damp places, places susceptible to rapid temperature variations, powerful vibrations and shocks, surge voltages of high amplitude and fast rise time, strong induced magnetic fields or similar extreme conditions should be avoided.

Sufficient space must be available in front of and at the rear of the IED to allow access for maintenance and future modifications. Flush mounted IEDs should be mounted so that IED modules can be added and replaced without excessive dismantling.

5.2 Dimensions

5.2.1 Case without rear cover

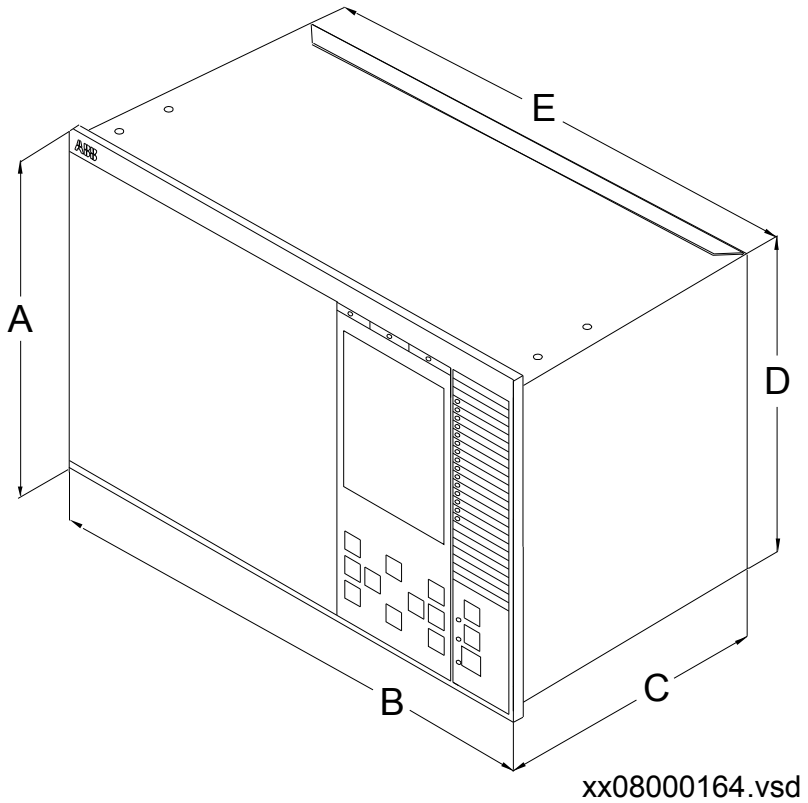

Figure 1: Case without rear cover

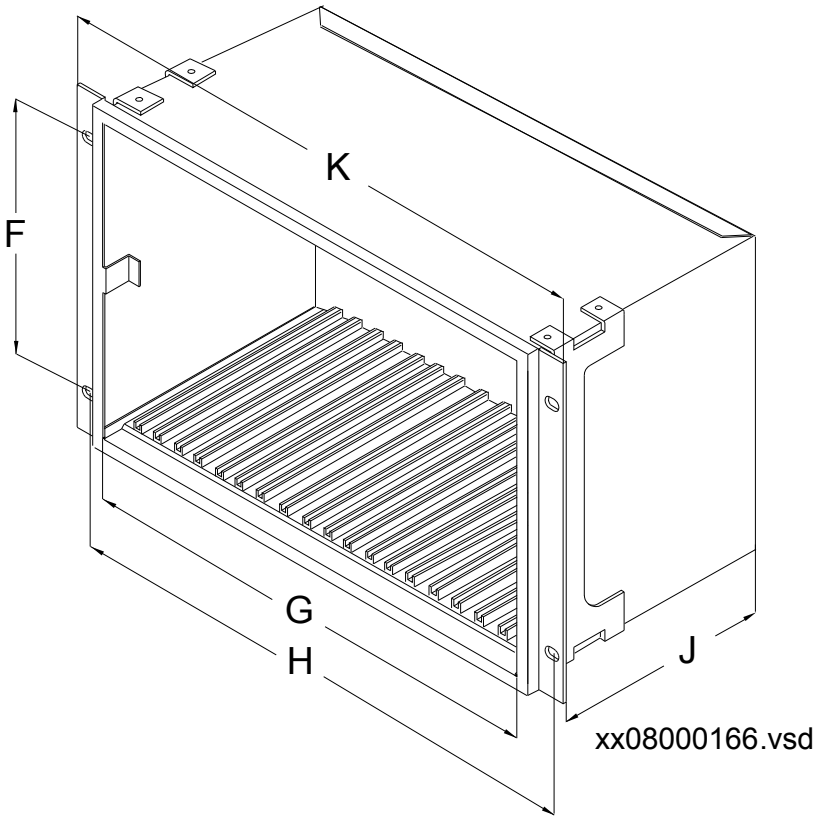

Figure 2: Case without rear cover with 19” rack mounting kit

Case size (mm)	A	B	C	D	E	F	G	H	J	K
6U, 1/2 x 19”	265.9	223.7	201.1	252.9	205.7	190.5	203.7	-	187.6	-
6U, 3/4 x 19”	265.9	336.0	201.1	252.9	318.0	190.5	316.0	-	187.6	-
6U, 1/1 x 19”	265.9	448.3	201.1	252.9	430.3	190.5	428.3	465.1	187.6	482.6
The H and K dimensions are defined by the 19” rack mounting kit										

5.2.2 Case with rear cover

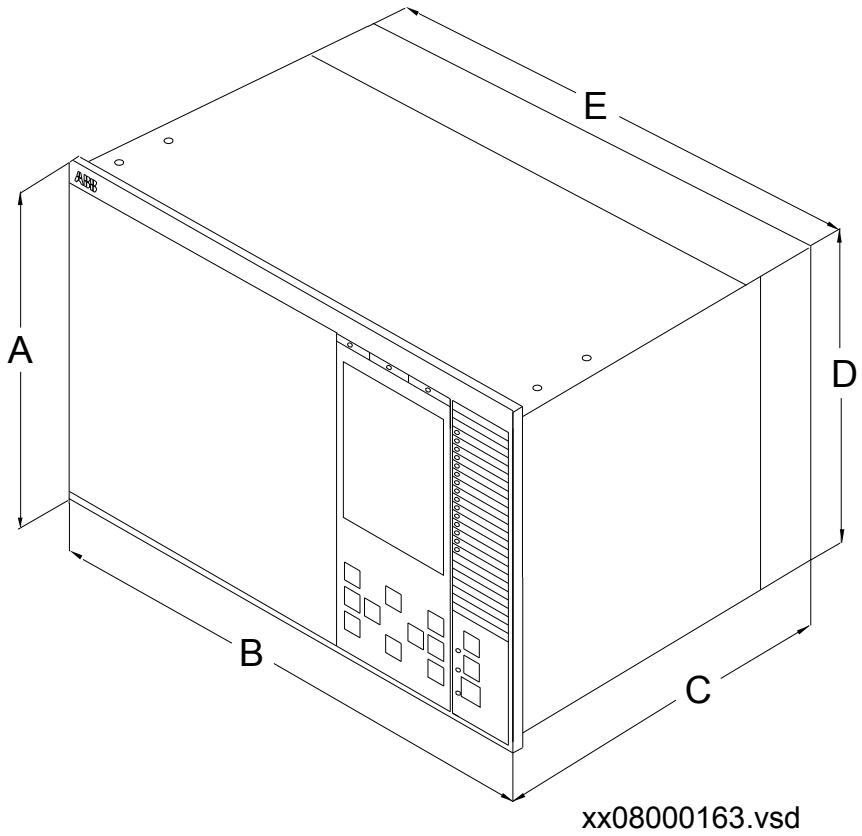

Figure 3: Case with rear cover

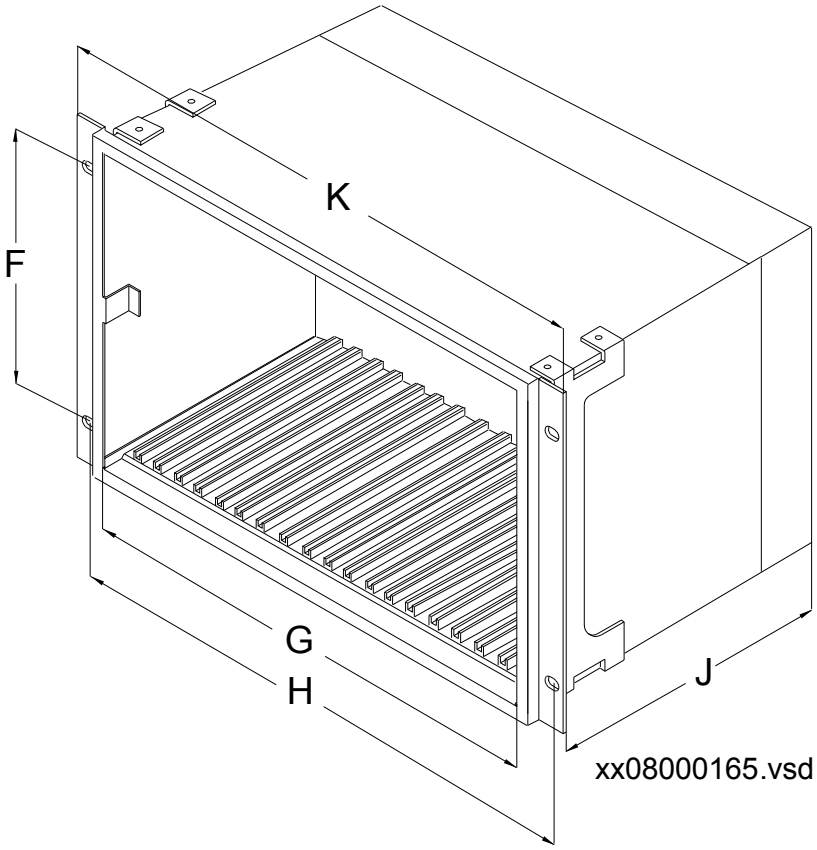

Figure 4: Case with rear cover and 19” rack mounting kit

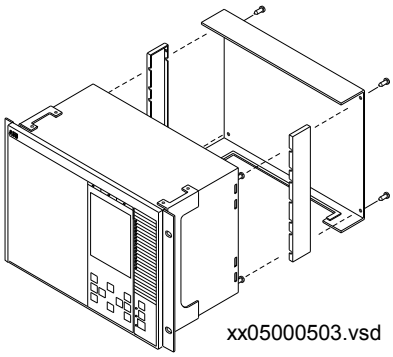

Figure 5: Rear cover case with details

Case size (mm)	A	B	C	D	E	F	G	H	J	K
6U, 1/2 x 19”	265.9	223.7	242.1	255.8	205.7	190.5	203.7	-	228.6	-
6U, 3/4 x 19”	265.9	336.0	242.1	255.8	318.0	190.5	316.0	-	228.6	-
6U, 1/1 x 19”	265.9	448.3	242.1	255.8	430.3	190.5	428.3	465.1	228.6	482.6
The H and K dimensions are defined by the 19” rack mounting kit.										

5.2.3 Flush mounting dimensions

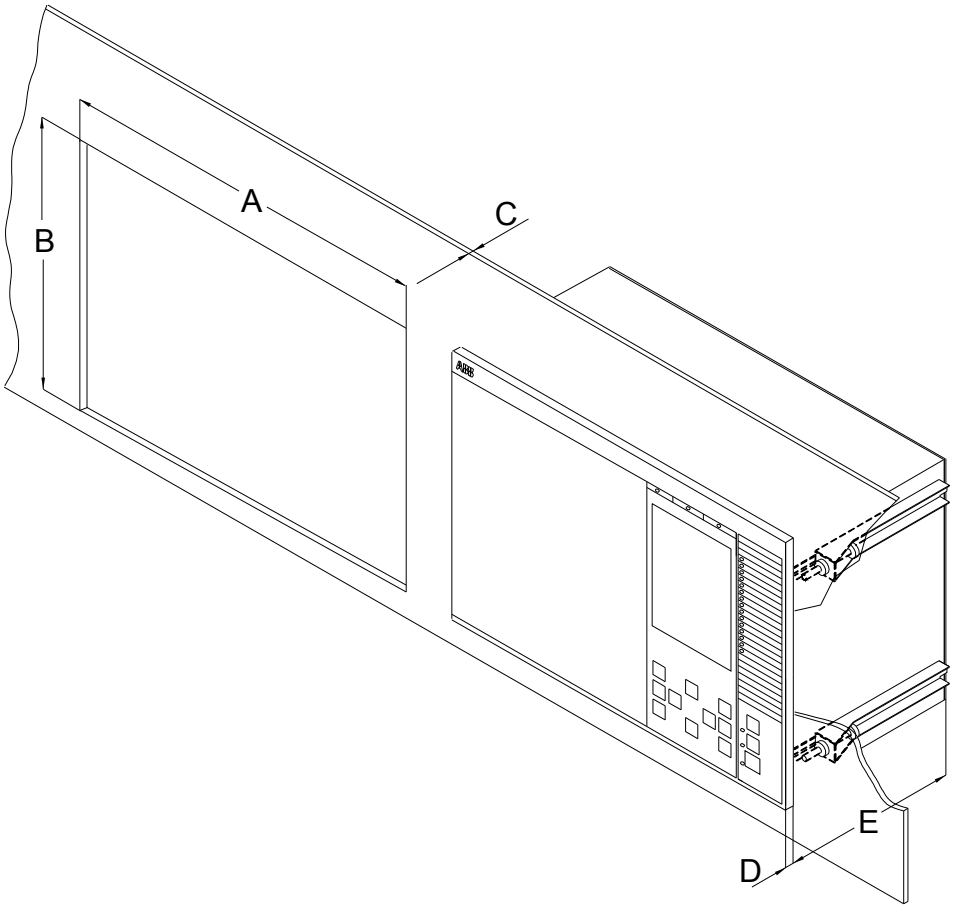

Figure 6: Flush mounting

Case size Tolerance	Cut-out dimensions (mm)			
	A +/-1	B +/-1	C	D
6U, 1/2 x 19"	210.1	254.3	4.0-10.0	12.5
6U, 3/4 x 19"	322.4	254.3	4.0-10.0	12.5
6U, 1/1 x 19"	434.7	254.3	4.0-10.0	12.5
E = 188.6 mm without rear protection cover, 229.6 mm with rear protection cover				

5.2.4 Side-by-side flush mounting dimensions

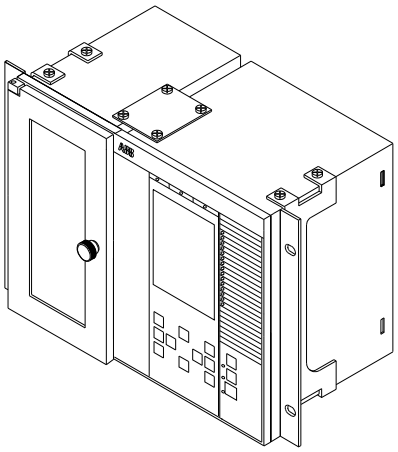

xx06000182.vsd

Figure 7: A 1/2 x 19” size 670 series IED side-by-side with RHGS6.

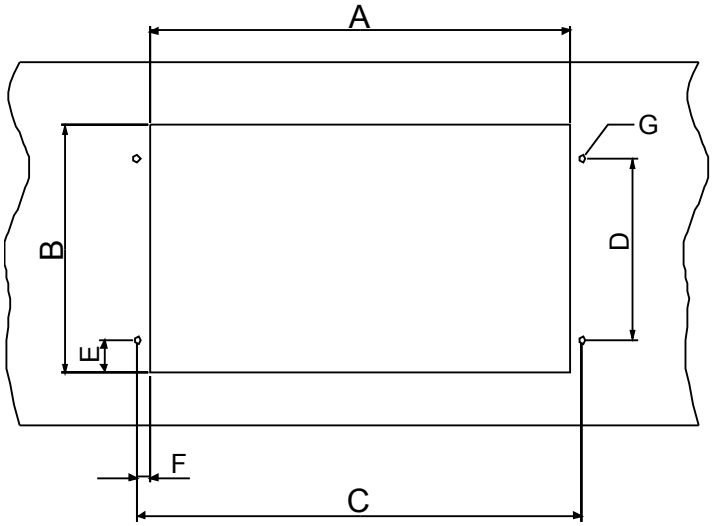

xx05000505.vsd

Figure 8: Panel-cut out dimensions for side-by-side flush mounting

5.2.5 Wall mounting dimensions

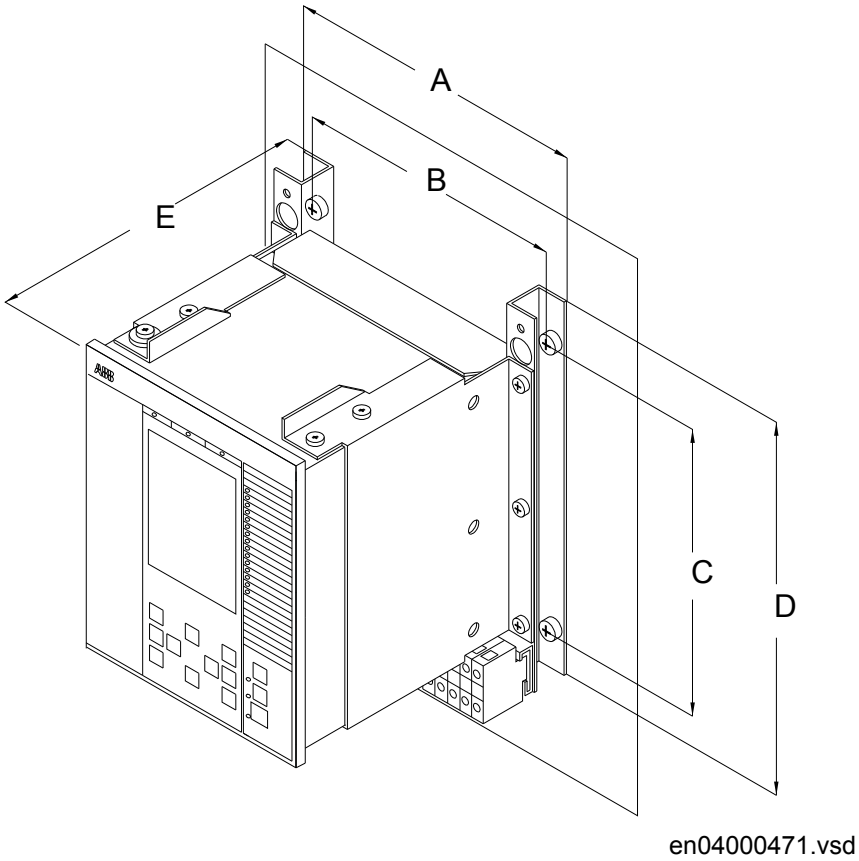

Figure 9: Wall mounting

Case size (mm)	A	B	C	D	E
6U, 1/2 x 19”	292.0	267.1	272.8	390.0	243.0
6U, 3/4 x 19”	404.3	379.4	272.8	390.0	243.0
6U, 1/1 x 19”	516.0	491.1	272.8	390.0	243.0

5.3 Mounting methods and details

5.3.1 Mounting the IED

The IED can be rack, wall or flush mounted with the use of different mounting kits, see figure 10.

An additional box of type RHGS can be mounted to one side of a 1/2 or 3/4 IED.

The different mounting kits contain all parts needed including screws and assembly instructions. The following mounting kits are available:

- Flush mounting kit
- 19” Panel (rack) mounting kit
- Wall mounting kit
- Side-by-side mounting kit

The same mounting kit is used for side-by-side rack mounting and side-by-side flush mounting.

The mounting kits must be ordered separately when ordering an IED. They are available as options on the ordering sheet in *Accessories for 670 series IED*, see section "Related documents".

Generally, all the screws included in delivered mounting kits are of Torx type and a screwdriver of the same type is needed (Tx10, Tx15, Tx20 and Tx25).

If other type of screws are to be used, be sure to use the dimensions of the screws that are given in this guide.

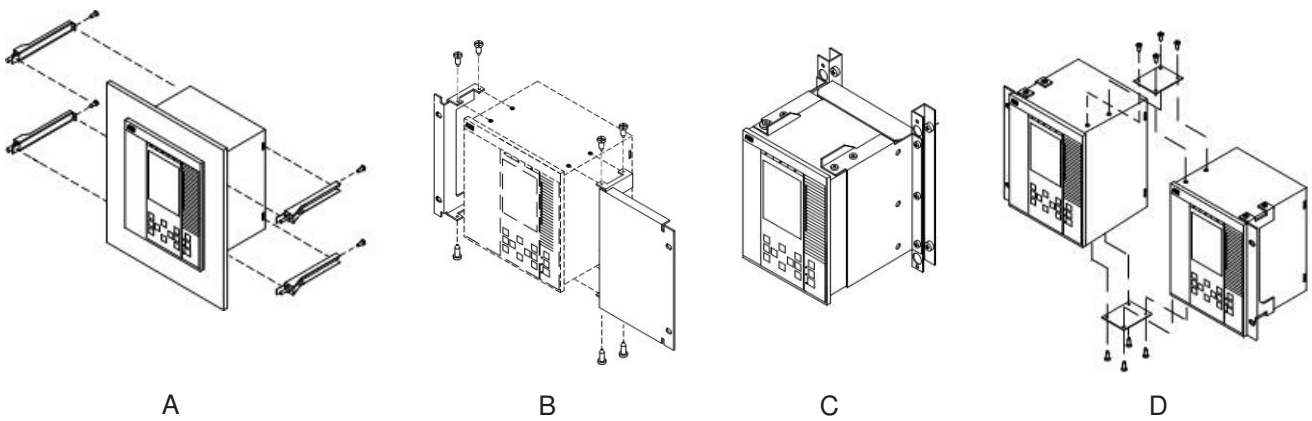

Figure 10: Different mounting methods

	Description
A	Flush mounting
B	19” Panel rack mounting
C	Wall mounting
D	Side-by-side rack or flush mounting

5.3.2 Flush mounting

5.3.2.1 Overview

The flush mounting kit are utilized for case sizes:

- 1/2 x 19”
- 3/4 x 19”
- 1/1 x 19”
- 1/4 x 19” (RHGS6 6U)

Only a single case can be mounted in each cut-out on the cubicle panel, for class IP54 protection.

Flush mounting cannot be used for side-by-side mounted IEDs when IP54 class must be fulfilled. Only IP20 class can be obtained when mounting two cases side-by-side in one (1) cut-out.

To obtain IP54 class protection, an additional factory mounted sealing must be ordered when ordering the IED.

5.3.2.2 Mounting procedure for flush mounting

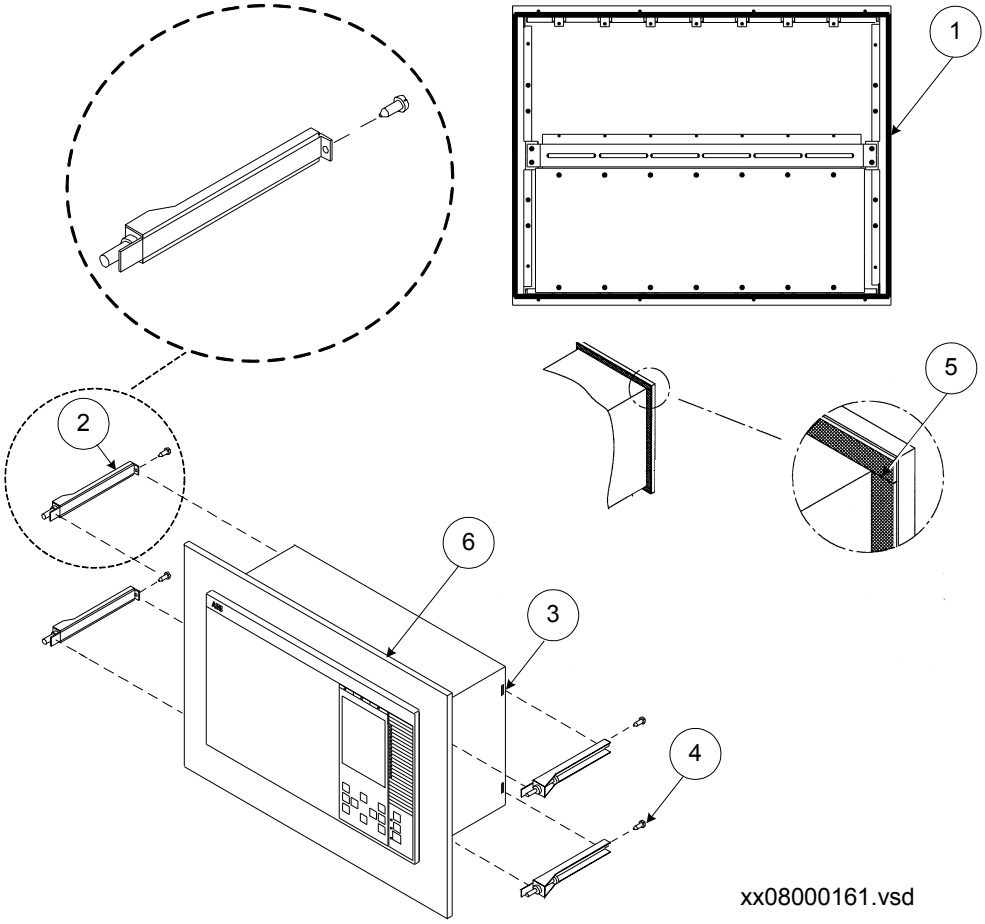

Figure 11: Flush mounting details.

PosNo	Description	Quantity	Type
1	Sealing strip, used to obtain IP54 class. The sealing strip is factory mounted between the case and front plate.	-	-
2	Fastener	4	-
3	Groove	-	-
4	Screw, self tapping	4	2.9x9.5 mm
5	Joining point of sealing strip	-	-
6	Panel	-	-

Procedure

1. Cut an opening in the panel (6).

See section "Flush mounting dimensions" regarding dimensions.

2. Carefully press the sealing strip (1) around the IEDs collar. Cut the end of the sealing strip a few mm to long to make the joining point (5) tight.
   The sealing strip is delivered with the mounting kit. The strip is long enough for the largest available IED.
3. Insert the IED into the opening (cut-out) in the panel.
4. Add and lock the fasteners (2) to the IED.
   Thread a fastener into the groove at the back end of the IED. Insert and lightly fasten the locking screw (4). Next, thread a fastener on the other side of the IED, and lightly fasten its locking screw. Lock the front end of the fastener in the panel, using the M5x25 screws.
   Repeat the procedure with the remaining two fasteners.

5.3.3 19” panel rack mounting

5.3.3.1 Overview

All IED sizes can be mounted in a standard 19” cubicle rack by using the for each size suited mounting kit which consists of two mounting angles and fastening screws for the angles.

The mounting angles are reversible which enables mounting of IED size 1/2 x 19” or 3/4 x 19” either to the left or right side of the cubicle.

Please note that the separately ordered rack mounting kit for side-by-side mounted IEDs, or IEDs together with RHGS cases, is to be selected so that the total size equals 19”.

When mounting the mounting angles, be sure to use screws that follows the recommended dimensions. Using screws with other dimensions than the original may damage the PCBs inside the IED.

5.3.3.2 Mounting procedure for 19” panel rack mounting

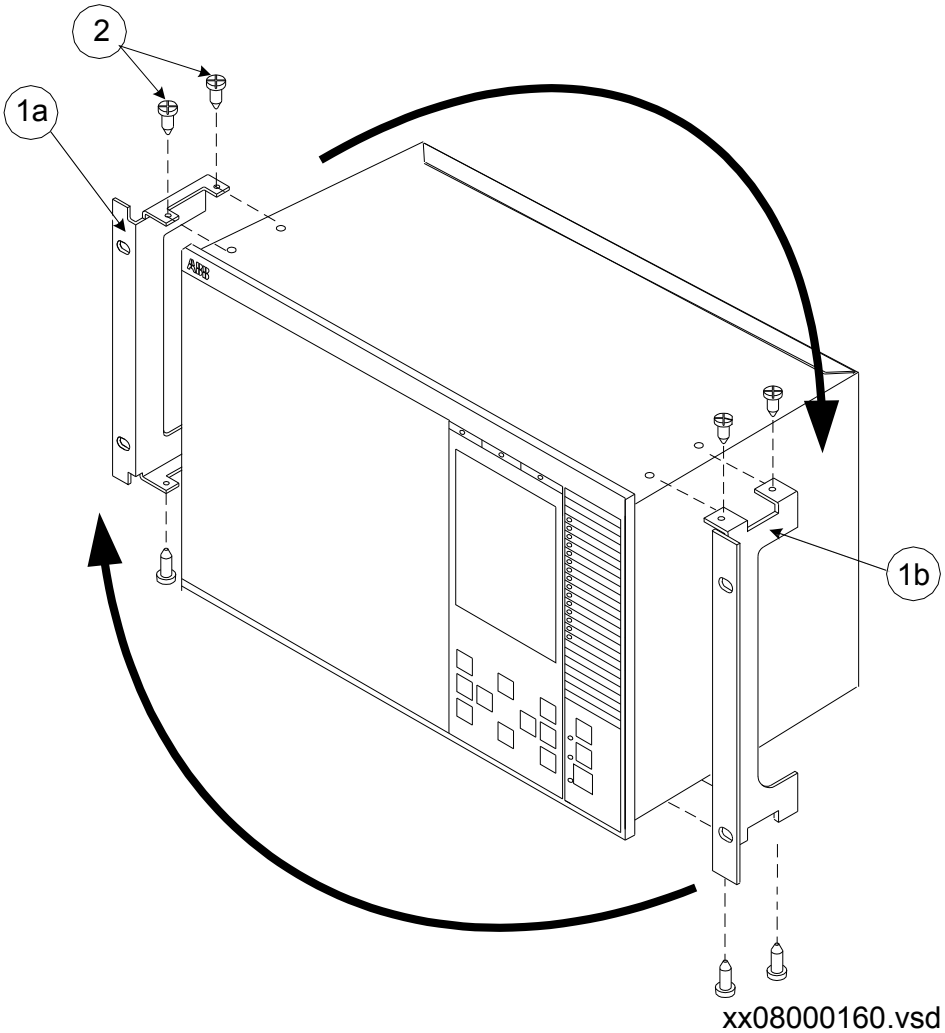

Figure 12: 19” panel rack mounting details

Pos	Description	Quantity	Type
1a, 1b	Mounting angels, which can be mounted, either to the left or right side of the case.	2	-
2	Screw	8	M4x6

Procedure

1. Carefully fasten the mounting angles (1a, 1b) to the sides of the IED. Use the screws (2) supplied in the mounting kit.
2. Place the IED assembly in the 19” panel.
3. Fasten the mounting angles with appropriate screws.

5.3.4 Wall mounting

5.3.4.1 Overview

All case sizes, 1/2 x 19”, 3/4 x 19” and 1/1 x 19”, can be wall mounted. It is also possible to mount the IED on a panel or in a cubicle.

When mounting the side plates, be sure to use screws that follows the recommended dimensions. Using screws with other dimensions than the original may damage the PCBs inside the IED.

If fiber cables are bent too much, the signal can be weakened. Wall mounting is therefore not recommended for communication modules with fiber connection; Serial SPA/IEC 60870-5-103 and LON communication module (SLM), Optical Ethernet module (OEM) and Line data communication module (LDCM).

5.3.4.2 Mounting procedure for wall mounting

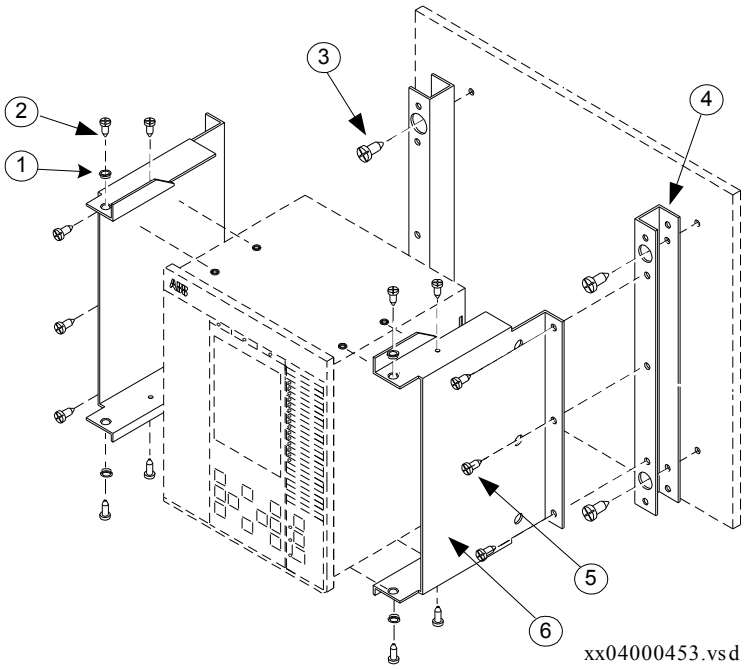

Figure 13: Wall mounting details.

PosNo	Description	Quantity	Type
1	Bushing	4	-
2	Screw	8	M4x10
3	Screw	4	M6x12 or corresponding
4	Mounting bar	2	-
5	Screw	6	M5x8
6	Side plate	2	-

Procedure

1. Mount the mounting bars onto the wall (4).
   See section "Wall mounting dimensions" for mounting dimensions.
   Depending on the wall different preparations may be needed like drilling and inserting plastic or expander plugs (concrete/plasterboard walls) or threading (metal sheet wall).
2. Make all electrical connections to the IED terminal.
   It is much easier to do this without the unit in place.
3. Mount the side plates to the IED.
4. Mount the IED to the mounting bars.

5.3.4.3 How to reach the rear side of the IED

The IED can be equipped with a rear protection cover, which is recommended to use with this type of mounting. See figure 14.

To reach the rear side of the IED, a free space of 80 mmis required on the unhinged side.

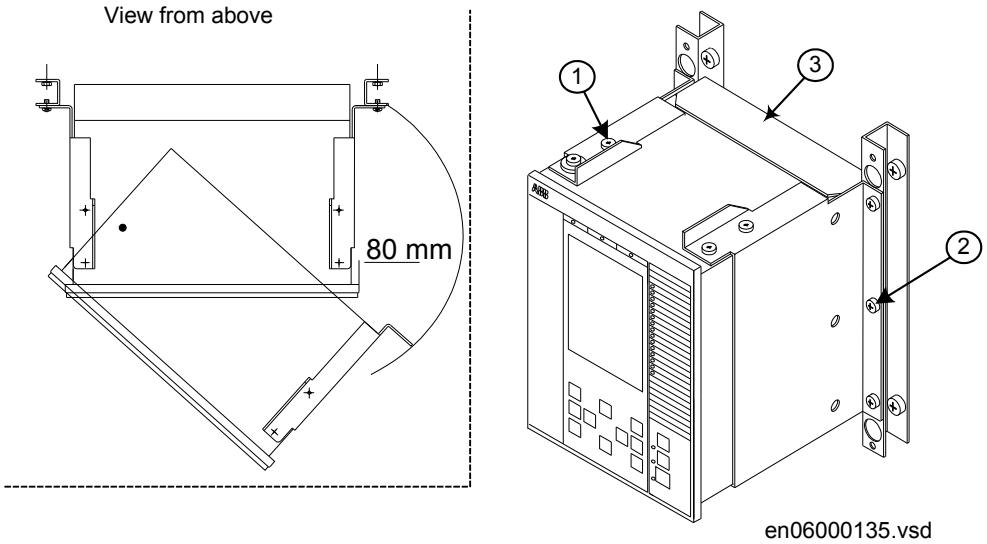

Figure 14: How to reach the connectors on the rear side of the IED.

PosNo	Description	Type
1	Screw	M4x10
2	Screw	M5x8
3	Rear protection cover	-

Procedure

1. Remove the inner screws (1), upper and lower on one side.
2. Remove all three fixing screws (2), on the opposite side, from wall support.
3. The IED can now be swung out for access to the connectors, after removing any rear protection.

5.3.5 Side-by-side 19” rack mounting

5.3.5.1 Overview

IED case sizes, 1/2 x 19” or 3/4 x 19” and RHGS cases, can be mounted side-by-side up to a maximum size of 19”. For side-by-side rack mounting, the side-by-side mounting kit together with the 19” rack panel mounting kit must be used. The mounting kit has to be ordered separately.

When mounting the plates and the angles on the IED, be sure to use screws that follows the recommended dimensions. Using screws with other dimensions than the original may damage the PCBs inside the IED.

5.3.5.2 Mounting procedure for side-by-side rack mounting

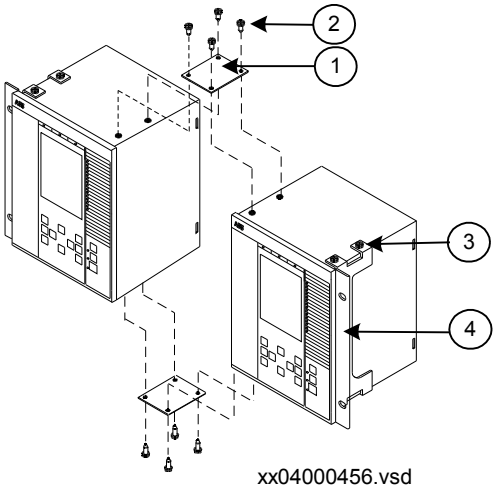

Figure 15: Side-by-side rack mounting details.

PosNo	Description	Quantity	Type
1	Mounting plate	2	-
2, 3	Screw	16	M4x6
4	Mounting angle	2	-

Procedure

1. Place the two IEDs next to each other on a flat surface.
2. Fasten a side-by-side mounting plate (1).
   Use four of the delivered screws (2, 3).
3. Carefully turn the two IEDs up-side down.
4. Fasten the second side-by-side mounting plate.
   Use the remaining four screws.
5. Carefully fasten the mounting angles (4) to the sides of the IED.
   Use the screws available in the mounting kit.
6. Place the IED assembly in the rack.
7. Fasten the mounting angles with appropriate screws.

5.3.5.3 IED in the 670 series mounted with a RHGS6 case

An 1/2 x 19” or 3/4 x 19” size IED can be mounted with a RHGS (6 or 12 depending on IED size) case. The RHGS case can be used for mounting a test switch of type RTXP 24. It also has enough space for a terminal base of RX 2 type for mounting of, for example, a DC-switch or two trip IEDs.

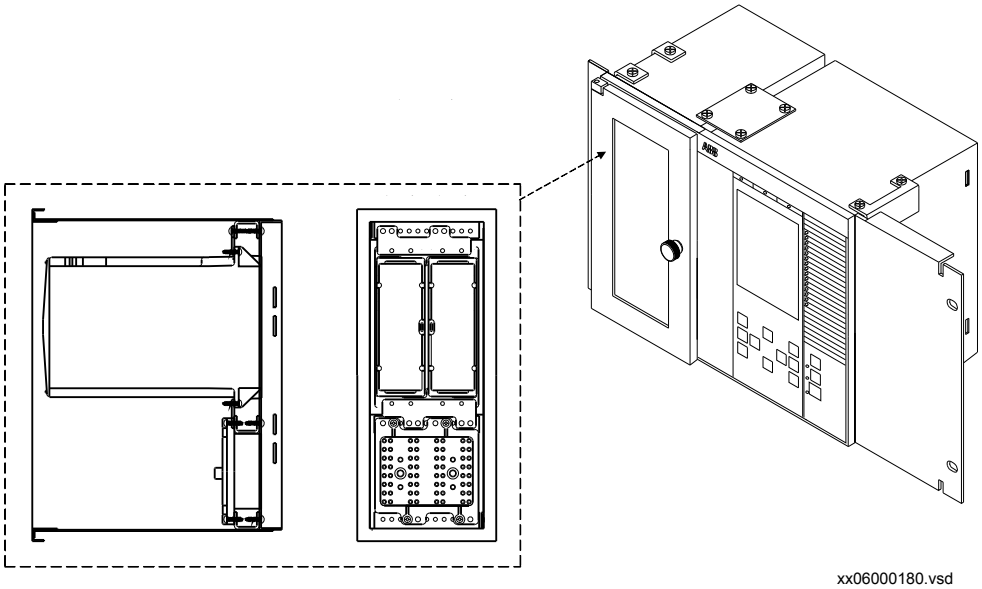

Figure 16: IED in the 670 series (1/2 x 19”) mounted with a RHGS6 case containing a test switch module equipped with only a test switch and a RX2 terminal base

5.3.6 Side-by-side flush mounting

5.3.6.1 Overview

It is not recommended to flush mount side by side mounted cases if IP54 is required. If your application demands side-by-side flush mounting, the side-by-side mounting details kit and the 19” panel rack mounting kit must be used. The mounting kit has to be ordered separately. The maximum size of the panel cut out is 19”.

With side-by-side flush mounting installation, only IP class 20 is obtained. To reach IP class 54, it is recommended to mount the IEDs separately. For cut out dimensions of separately mounted IEDs, see section "Flush mounting".

When mounting the plates and the angles on the IED, be sure to use screws that follows the recommended dimensions. Using screws with other dimensions than the original may damage the PCBs inside the IED.

Please contact factory for special add on plates for mounting FT switches on the side (for 1/2 19" case) or bottom of the relay.

5.3.6.2 Mounting procedure for side-by-side flush mounting

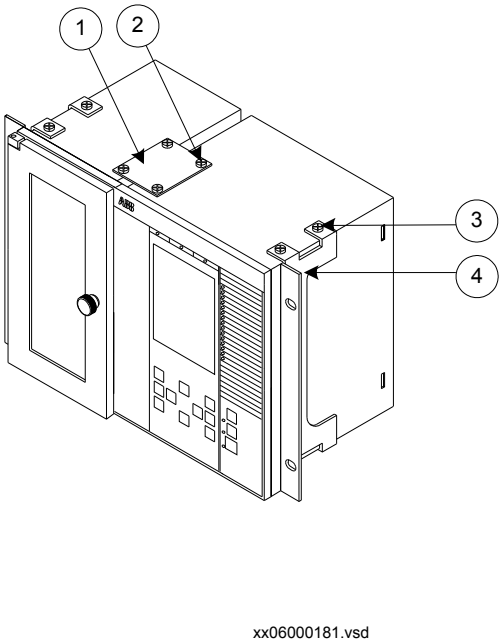

Figure 17: Side-by-side flush mounting details (RHGS6 side-by-side with 1/2 x 19" IED).

PosNo	Description	Quantity	Type
1	Mounting plate	2	-
2, 3	Screw	16	M4x6
4	Mounting angle	2	-

Procedure

1. Make a panel cut-out.
   For panel cut out dimension, see section "Side-by-side flush mounting dimensions".
2. Carefully press the sealing strip around the IED collar. Cut the end of the sealing strip a few mm to long to make the joining point tight.
   Repeat the same procedure with the second case.
   The sealing strip is delivered with the mounting kit. The strip is long enough for the largest available IED.
3. Place the two IEDs next to each other on a flat surface.

4. Fasten a side-by-side mounting plate (1).
   Use four of the delivered screws (2, 3).
5. Carefully turn the two IEDs up-side down.
6. Fasten the second side-by-side mounting plate.
   Use the remaining four screws.
7. Carefully fasten the mounting angles (4) to the sides of the IED.
   Use the fixing screws available in the mounting kit.
8. Insert the IED into the cut-out.
9. Fasten the mounting angles with appropriate screws.

5.4 Making the electrical connection

5.4.1 IED connectors

5.4.1.1 Overview

The quantity and designation of connectors depend upon the type and size of the IED. The rear cover plates are prepared with space for the maximum of HW options for each case size and the cut-outs that are not in use are covered with a plate from factory.

Overview

Table 1: Basic modules

Module	Description
Combined backplane module (CBM)	A backplane PCB that carries all internal signals between modules in an IED. Only the TRM (when included) is not connected directly to this board.
Universal backplane module (UBM)	A backplane PCB that forms part of the IED backplane with connectors for TRM (when included), ADM etc.
Power supply module (PSM)	Including a regulated DC/DC converter that supplies auxiliary voltage to all static circuits. • An internal fail alarm output is available.
Numerical module (NUM)	Module for overall application control. All information is processed or passed through this module, such as configuration, settings and communication.
Local Human machine interface (LHMI)	The module consists of LED:s, an LCD, a push button keyboard and an ethernet connector used to connect a PC to the IED.
Transformer input module (TRM)	Transformer module that galvanically separates the internal circuits from the VT and CT circuits. It has 12 analog inputs.
Analog digital conversion module (ADM)	Slot mounted PCB with A/D conversion.

Table 2: Application specific modules

Module	Description
Binary input module (BIM)	Module with 16 optically isolated binary inputs
Binary output module (BOM)	Module with 24 single outputs or 12 double-pole command outputs including supervision function
Binary I/O module (IOM)	Module with 8 optically isolated binary inputs, 10 outputs and 2 fast signalling outputs.
Line data communication modules (LDCM), short range, medium range, long range, X21	Modules used for digital communication to remote terminal.
Serial SPA/LON/IEC 60870-5-103 communication modules (SLM)	Used for SPA/LON/IEC 60870–5–103 communication
Optical ethernet module (OEM)	PMC board for IEC 61850 based communication.
mA input module (MIM)	Analog input module with 6 independent, galvanically separated channels.
GPS time synchronization module (GSM)	Used to provide the IED with GPS time synchronization.
Static output module (SOM)	Module with 6 fast static outputs and 6 change over output relays.
IRIG-B Time synchronization module (IRIG-B)	Module with 2 inputs. One is used for handling both pulse-width modulated signals and amplitude modulated signals and one is used for optical input type ST for PPS time synchronization.

5.4.1.2 Front side connectors

Figure 18: IED front side connector

PosNo	Description
1	IED serial communication port with RJ45 connector
2	Ethernet cable with RJ45 connectors

The cable between PC and the IED serial communication port shall be a crossed-over Ethernet cable with RJ45 connectors. If the connection are made via a hub or switch, a standard Ethernet cable can be used.

5.4.1.3 Rear side connectors

Table 3: Designations for 1/2 x 19" casing with 1 TRM slot

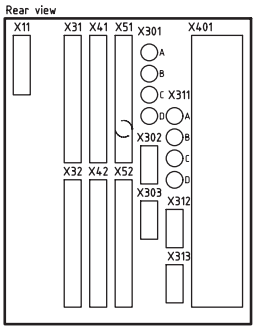

Module	Rear Positions
PSM	X11
BIM, BOM, SOM or IOM	X31 and X32 etc. to X51 and X52
BIM, BOM, SOM, IOM or GSM	X51, X52
SLM	X301:A, B, C, D
IRIG-B 1)	X302
OEM	X311:A, B, C, D
RS485 or LDCM 2) 3)	X312
LDCM 2)	X313
TRM	X401

1) IRIG-B installation, when included in seat P30:2
2) LDCM installation sequence: P31:2 or P31:3
3) RS485 installation, when included in seat P31:2
Note!
1 One LDCM can be included depending of availability of IRIG-B respective RS485 modules.

Table 4: Designations for 3/4 x 19" casing with 1 TRM slot

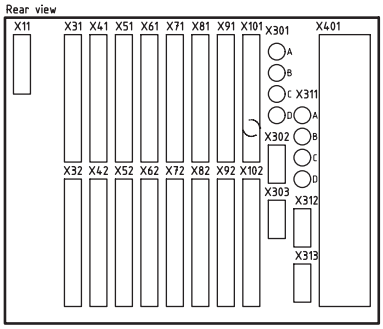

Module	Rear Positions
PSM	X11
BIM, BOM, SOM, IOM or MIM	X31 and X32 etc. to X101 and X102
BIM, BOM, SOM, IOM, MIM or GSM	X101, X102
SLM	X301:A, B, C, D
IRIG-B or LDCM 1) 2)	X302
LDCM 2)	X303
OEM 4)	X311:A, B, C, D
RS485 or LDCM 2) 3)	X312
LDCM 2)	X313
TRM	X401

1) IRIG-B installation, when included in seat P30:2
2) LDCM installation sequence: P31:2, P31:3, P30:2 and P30:3
3) RS485 installation, when included in seat P31:2 or P31:3
4) OEM X311:A, B (IEC 61850-8-1). X311:C, D (IEC 61850-8-1

Note!
2-4 LDCM can be included depending of availability of IRIG-B respective RS485 modules.

Table 5: Designations for 3/4 x 19" casing with 2 TRM slot

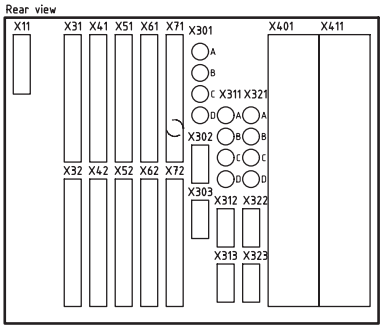

Module	Rear Positions
PSM	X11
BIM, BOM, SOM, IOM or MIM	X31 and X32 etc. to X71 and X72
BIM, BOM, SOM, IOM, MIM or GSM	X71, X72
SLM	X301:A, B, C, D
IRIG-B or LDCM 1,2)	X302
LDCM 2)	X303
OEM 4)	X311:A, B, C, D
RS485 or LDCM 2) 3)	X312
LDCM 2)	X313
LDCM 2)	X322
LDCM 2)	X323
TRM 1	X401
TRM 2	X411

1) IRIG-B installation, when included in seat P30:2
2) LDCM installation sequence: P31:2, P31:3, P32:2, P32:3, P30:2 and P30:3
3) RS485 installation, when included in seat P31:2, P31:3, P32:2 or P32:3
4) OEM X311:A, B (IEC 61850-8-1). (X311:C, D IEC 61850-8-1)

Note!
2-4 LDCM can be included depending of availability of IRIG-B respective RS485 modules.
When IRIG-B, RS485 and 4 pc of LDCM are in use, needs a second ADM.

Table 6: Designations for 1/1 x 19" casing with 1 TRM slot

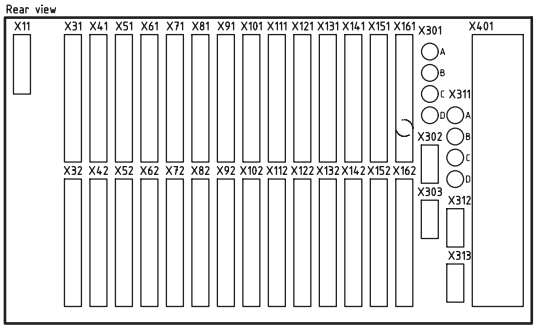

Module	Rear Positions
PSM	X11
BIM, BOM, SOM, IOM or MIM	X31 and X32 etc. to X161 and X162
BIM, BOM, SOM, IOM, MIM or GSM	X161 and X162
SLM	X301:A, B, C, D
IRIG-B	X302
LDCM 1)	X313 and X303
OEM 2)	X311:A, B, C, D
RS485	X312, X313
TRM	X401

Note!
1) 2 LDCM can be included. First LDCM always in position X313, second LDCM always in position X303.
2) OEM X311:A, B (IEC 61850-8-1). OEM X311:C, D (IEC 61850-8-1)

Table 7: Designations for 1/1 x 19" casing with 2 TRM slots

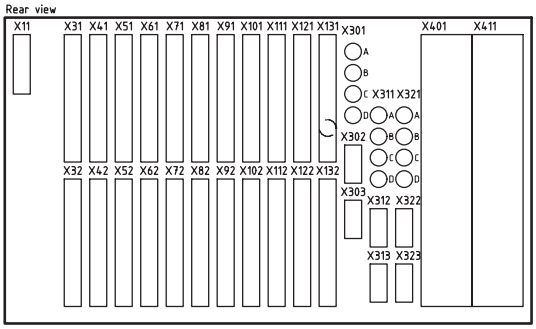

Module	Rear Positions
PSM	X11
BIM, BOM, SOM, IOM or MIM	X31 and X32 etc. to X131 and X132
BIM, BOM, SOM, IOM, MIM or GSM	X131, X132
SLM	X301:A, B, C, D
IRIG-B or LDCM 1,2)	X302
LDCM 2)	X303
OEM 4)	X311:A, B, C, D
RS485 or LDCM 2) 3)	X312
LDCM 2)	X313
LDCM 2)	X322
LDCM 2)	X323
TRM 1	X401
TRM 2	X411

1) IRIG-B installation, when included in seat P30:2
2) LDCM installation sequence: P31:2, P31:3, P32:2, P32:3, P30:2 and P30:3
3) RS485 installation, when included in seat P31:2, P31:3, P32:2 or P32:4
4) OEM X311:A, B (IEC 61850-8-1). OEM X311:C, D

Note!
2-4 LDCM can be included depending of availability of IRIG-B respective RS485 modules. When IRIG-B, RS485 and 4 pc of LDCM are in use, needs a second ADM.

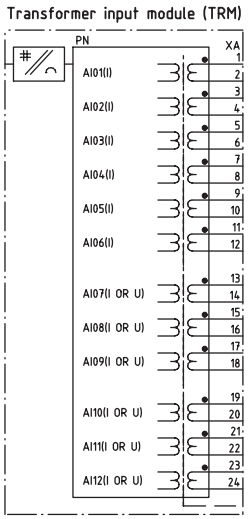

Figure 19: Transformer input module (TRM)

■ Indicates high polarity

	CT/VT-input designation according to figure 19											
Current/voltage configuration (50/60 Hz)	AI01	AI02	AI03	AI04	AI05	AI06	AI07	AI08	AI09	AI10	AI11	AI12
12I, 1A	1A	1A	1A	1A	1A	1A	1A	1A	1A	1A	1A	1A
12I, 5A	5A	5A	5A	5A	5A	5A	5A	5A	5A	5A	5A	5A
9I+3U, 1A	1A	1A	1A	1A	1A	1A	1A	1A	1A	110-220 V	110-220 V	110-220 V
9I+3U, 5A	5A	5A	5A	5A	5A	5A	5A	5A	5A	110-220 V	110-220 V	110-220 V
5I, 1A+4I, 5A+3U	1A	1A	1A	1A	1A	5A	5A	5A	5A	110-220 V	110-220 V	110-220 V
7I+5U, 1A	1A	1A	1A	1A	1A	1A	1A	110-220 V	110-220 V	110-220 V	110-220 V	110-220 V
7I+5U, 5A	5A	5A	5A	5A	5A	5A	5A	110-220 V	110-220 V	110-220 V	110-220 V	110-220 V
6I+6U, 1A	1A	1A	1A	1A	1A	1A	110-220 V	110-220 V	110-220 V	110-220 V	110-220 V	110-220 V
6I+6U, 5A	5A	5A	5A	5A	5A	5A	110-220 V	110-220 V	110-220 V	110-220 V	110-220 V	110-220 V
6I, 1A	1A	1A	1A	1A	1A	1A	-	-	-	-	-	-
6I, 5A	5A	5A	5A	5A	5A	5A	-	-	-	-	-	-

Note that internal polarity can be adjusted by setting of analog input CT neutral direction and/or on SMAI pre-processing function blocks.

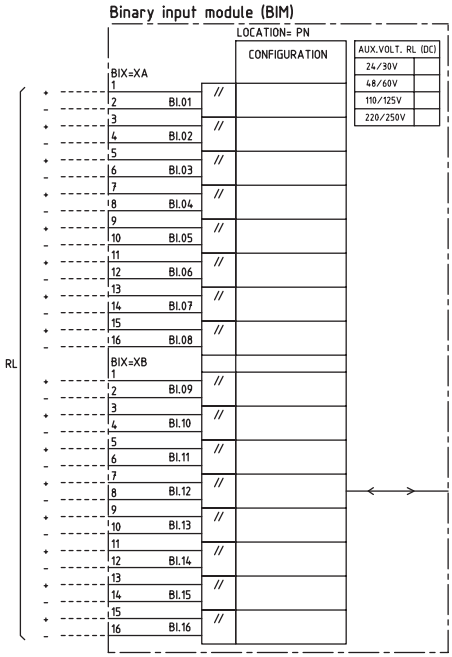

Figure 20: *Binary input module (BIM). Input contacts named XA corresponds to rear position X31, X41, and so on, and input contacts named XB to rear position X32, X42, and so on.*

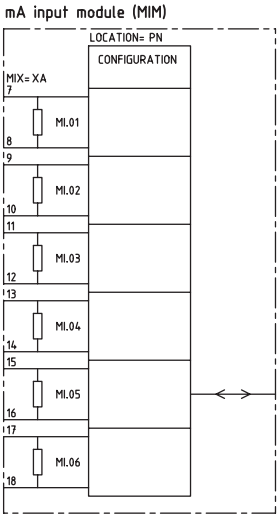

Figure 21: *mA input module (MIM)*

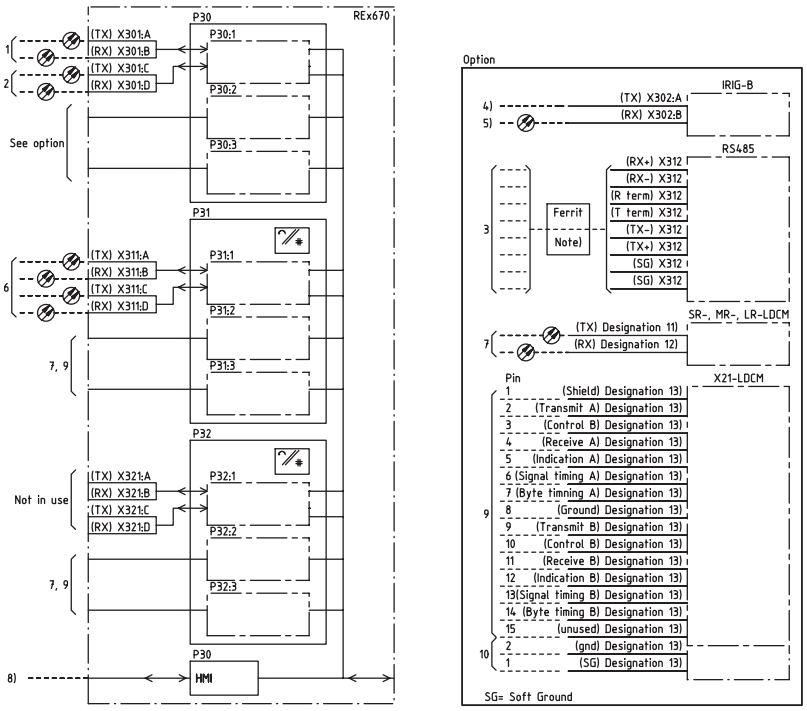

Figure 22: Communication interfaces (OEM, LDCM, SLM and HMI)

Note to figure 22

1) Rear communication port SPA/IEC 61850-5-103, ST-connector for glass alt. HFBR Snap-in connector for plastic as ordered

2) Rear communication port LON, ST connector for glass alt. HFBR Snap-in connector for plastic as ordered

3) Rear communication port RS485, terminal block

4) Time synchronization port IRIG-B, BNC-connector

5) Time synchronization port PPS or Optical IRIG-B, ST-connector

6) Rear communication port IEC 61850-8-1 for X311:A, B, C, D, ST-connector

7) Rear communication port C37.94, ST-connector

8) Front communication port Ethernet, RJ45 connector

9) Rear communication port 15-pole female micro D-sub, 1.27 mm (0.050") pitch

10) Rear communication port, terminal block

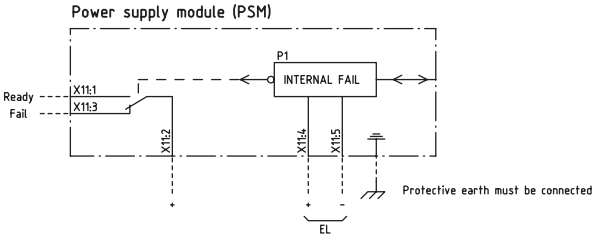

Figure 23: Power supply module (PSM)

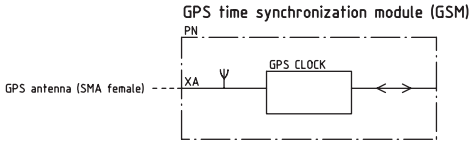

Type of CBM	PN=	XA=
1/2x19" casing with 1 TRM slot	P5	X51
3/4x19" casing with 1 TRM slot	P10	X101
3/4x19" casing with 2 TRM slots	P7	X71
1/1x19" casing with 1 TRM slot	P16	X161
1/1x19" casing with 2 TRM slots	P13	X131

Figure 24: GPS time synchronization module (GSM)

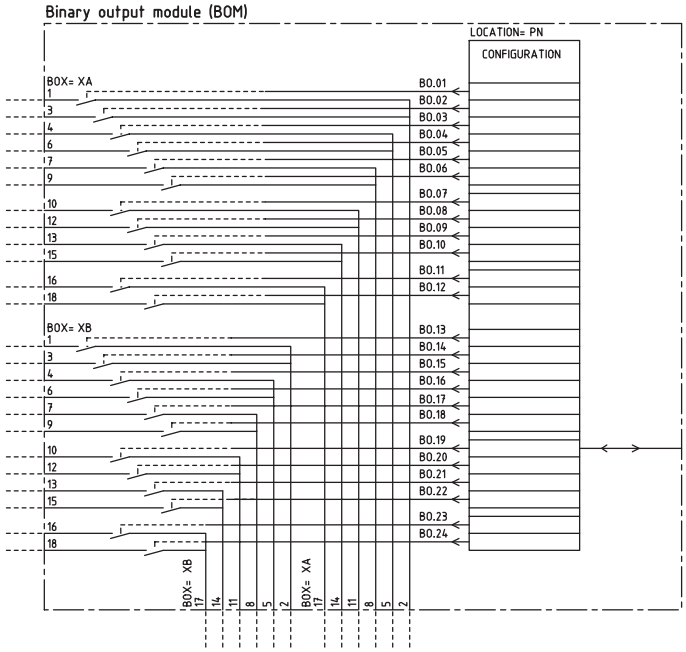

Figure 25: Binary output module (BOM). Output contacts named XA corresponds to rear position X31, X41, and so on, and output contacts named XB to rear position X32, X42, and so on.

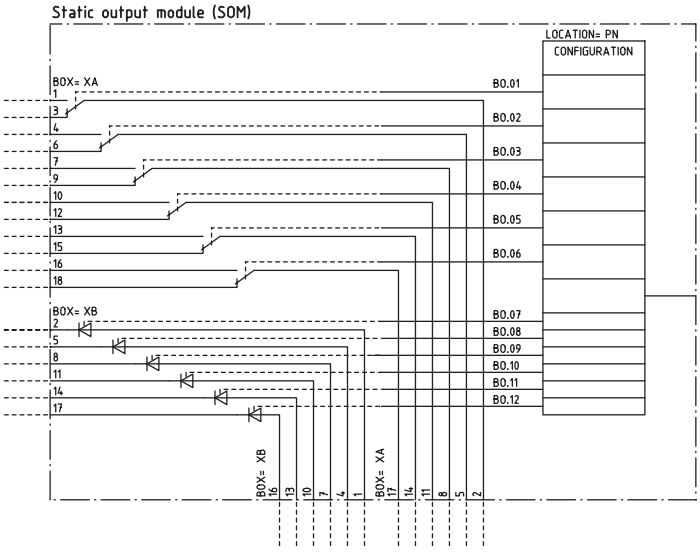

Figure 26: Static output module (SOM)

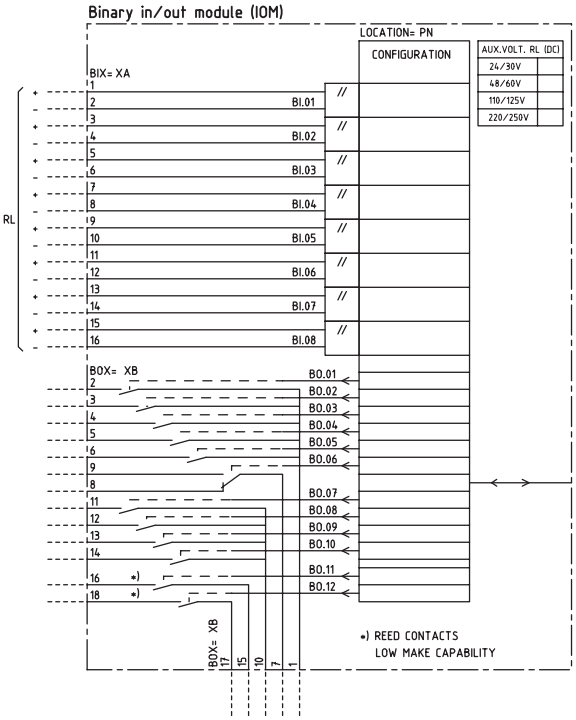

Figure 27: Binary in/out module (IOM). Input contacts named XA corresponds to rear position X31, X41, and so on, and output contacts named XB to rear position X32, X42, and so on.

5.4.1.4 Connection examples

WARNING! USE EXTREME CAUTION! Dangerously high voltages might be present on this equipment, especially on the plate with resistors. Do any maintenance ONLY if the primary object protected with this equipment is de-energized. If required by national law or standard, enclose the plate with resistors with a protective cover or in a separate box.

Connections for three-phase high impedance differential protection

Generator, reactor or busbar differential protection is a typical application for three-phase high impedance differential protection. Typical CT connections for three-phase high impedance differential protection scheme are shown in figure 28.

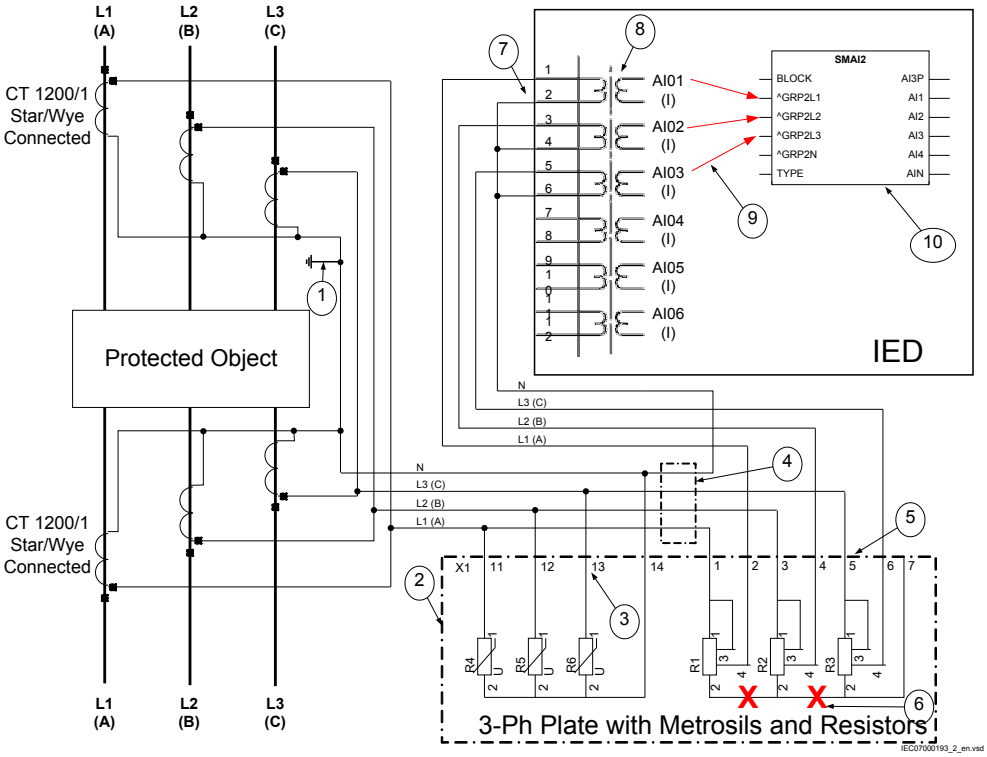

Figure 28: CT connections for high impedance differential protection

Pos	Description
1	Scheme earthing point

Note that it is of outmost importance to insure that only one earthing point exist in such scheme.

2	Three-phase plate with setting resistors and metrosils.

3 Necessary connection for three-phase metrosil set. Shown connections are applicable for both types of three-phase plate.

4 Position of optional test switch for secondary injection into the high impedance differential IED.

5 Necessary connection for setting resistors. Shown connections are applicable for both types of three-phase plate.

6 The factory made star point on a three-phase setting resistor set.

Shall be removed for installations with 650 and 670 series IEDs. This star point is required for RADHA schemes only.

7 How to connect three individual phase currents for high impedance scheme to three CT inputs in the IED.

8 Transformer input module, where the current inputs are located.

Note that the CT ratio for high impedance differential protection application must be set as one.

- For main CTs with 1A secondary rating the following setting values shall be entered: *CTprim* = *1A* and *CTsec* = *1A*
- For main CTs with 5A secondary rating the following setting values shall be entered: *CTprim* = *5A* and *CTsec* = *5A*
- The parameter *CTStarPoint* shall be always left to the default value *ToObject*.

9 Three connections made in the Signal Matrix, which connect these three current inputs to the first three input channels of the preprocessing function block (10). For high impedance differential protection preprocessing function block in 3ms task shall be used.

10 Preprocessing block, to digitally filter the connected analogue inputs. Preprocessing block outputs AI1, AI2 and AI3 shall be connected to three instances of 1Ph high impedance differential protection HZPDIF function blocks, for example instance 1, 2 and 3 of HZPDIF in the configuration tool.

Connections for 1Ph High impedance differential protection HZPDIF

Restricted earth fault protection REFPDIFis a typical application for 1Ph High impedance differential protection HZPDIF. Typical CT connections for high impedance based REFPDIF protection scheme are shown in figure 29.

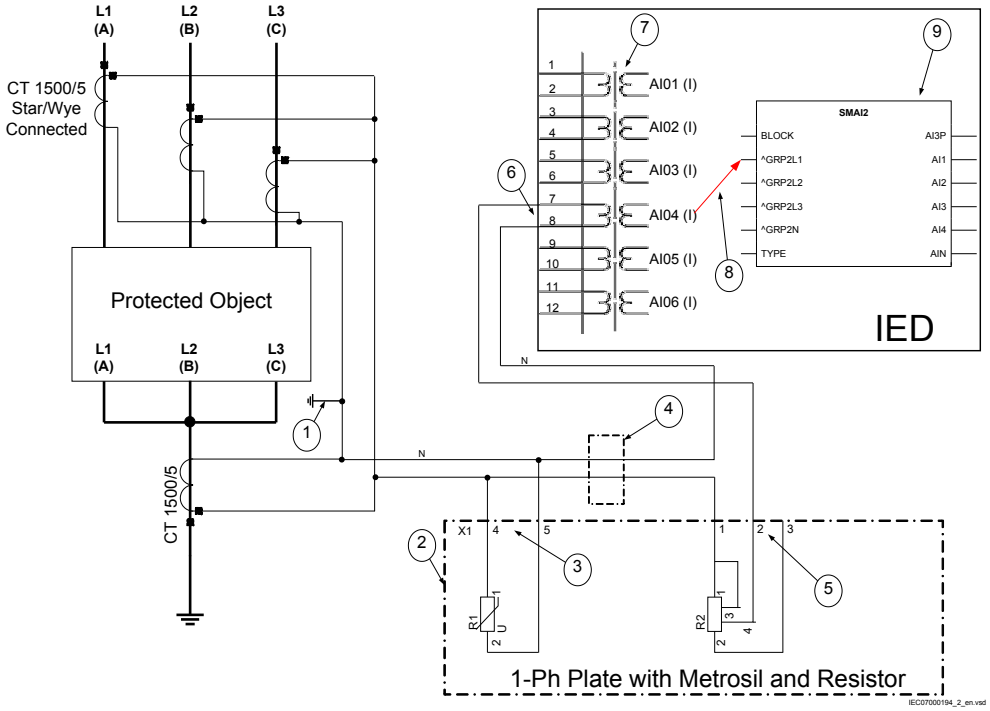

Figure 29: CT connections for restricted earth fault protection

Pos	Description
1	Scheme earthing point

Note that it is of outmost importance to insure that only one earthing point exist in such scheme.

2	One-phase plate with setting resistor and metrosil.
3	Necessary connection for the metrosil. Shown connections are applicable for both types of one-phase plate.
4	Position of optional test switch for secondary injection into the high impedance differential IED.
5	Necessary connection for setting resistor. Shown connections are applicable for both types of one-phase plate.
6	How to connect REFPDIF high impedance scheme to one CT input in IED.
7	Transformer input module where this current input is located.

Note that the CT ratio for high impedance differential protection application must be set as one.

- For main CTs with 1A secondary rating the following setting values shall be entered: *CTprim* = *1A* and *CTsec* = *1A*
- For main CTs with 5A secondary rating the following setting values shall be entered: *CTprim* = *5A* and *CTsec* = *5A*
- The parameter *CTStarPoint* shall always be left to the default value *ToObject*

8 Connection made in the Signal Matrix, which connects this current input to first input channel of the preprocessing function block (10). For high impedance differential protection preprocessing function block in 3ms task shall be used.

9 Preprocessing block, which has a task to digitally filter the connected analogue inputs. Preprocessing block output AI1 shall be connected to one instances of 1Ph high impedance differential protection function HZPDIF (for example, instance 1 of HZPDIF in the configuration tool).

5.4.2 Connecting to protective earth

Connect the earthing screw (pos 1 in figure 30) on the rear of the IED to the closest possible earthing point in the cubicle. Electrical codes and standards require that protective earth cables are green/yellow conductors with a cross section area of at least 2.5 mm^2 (AWG14). There are several protective earthing screws on an IED. The Power supply module (PSM), Transformer input modules (TRM) and the enclosure are all separately earthed, see figure 30 below.

The cubicle must be properly connected to the station earthing system. Use a conductor with a core cross section area of at least 4 mm^2 (AWG 12).

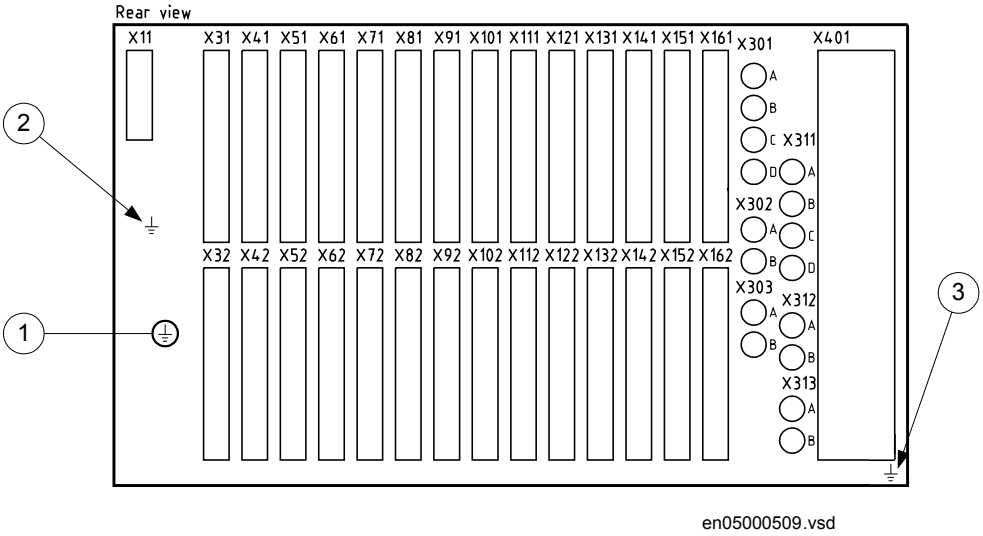

Figure 30: Rear view of IED showing earthing points.

Pos	Description
1	Main protective earth to chassis
2	Earthing screw to Power supply module (PSM)
3	Earthing screw to Transformer input module (TRM). (There is one earth connection per TRM)

Use the main protective earth screw (1) for connection to the stations earthing system. Earthing screws for PSM module (2) and TRM module (3) must be fully tightened to secure protective earth connection of these modules.

5.4.3 Connecting the power supply module

The wiring from the cubicle terminal block to the IED terminals (see figure 23 for PSM connection diagram) must be made in accordance with the established guidelines for this type of equipment. The wires from binary inputs and outputs and the auxiliary supply must be routed separately from the current transformer cables between the terminal blocks of the cubicle and the IED's connections. The connections are made on connector X11. For location of connector X11, refer to section "Rear side connectors".

5.4.4 Connecting to CT and VT circuits

CTs and VTs are connected to the 24–pole connector of the Transformer input module (TRM) on the rear side of the IED. Connection diagram for TRM is shown in figure 19.

Use a solid conductor with a cross section area between 2.5-6 mm^2 (AWG14-10) or a stranded conductor with a cross section area between 2.5-4 mm^2 (AWG14-12).

If the IED is equipped with a test-switch of type RTXP 24 COMBIFLEX wires with 20 A sockets must be used to connect the CT and VT circuits.

Connectors on TRM (for location see section "Rear side connectors") for current and voltage transformer circuits are so called “feed-through IED blocks” and are designed for conductors with cross sectional area up to 4 mm^2 (AWG 12). The screws used to fasten the conductors should be tightened with a torque of 1Nm.

Connector terminals for CT and VT circuits, as well as terminals for binary input and output signals, can be of either ringlug or compression connection type, depending on ANSI/IEC standards, or customers choice.

Table 8: CT and VT circuit connectors

Connector type	Rated voltage and current	Maximum conductor area
Screw compression type	250 V AC, 20 A	4 mm^2 (AWG12) 2 x 2.5 mm^2 (2 x AWG14)
Terminal blocks suitable for ring lug terminals	250 V AC, 20 A	4 mm^2 (AWG12)

Table 9: Binary I/O connection system

Connector type	Rated voltage	Maximum conductor area
Screw compression type	250 V AC	2.5 mm^2 2 × 1 mm^2
Terminal blocks suitable for ring lug terminals	300 V AC	3 mm^2

Because of limitations of space, when ring lug terminal is ordered for Binary I/O connections, one blank slot is necessary between two adjacent IO cards. Please refer to the ordering particulars for details.

5.4.4.1 Configuration for analog CT inputs

The secondary rated current of the CT (that is, 1A or 5A) determines the choice of TRM in the IED. Two TRMs are available, One is dimensioned for an input current of 5A and the other for an input of 1A. If the CT rated secondary current does not match the TRM input current rating adjustments can be made in settings depending on the tolerance of the TRM.

5.4.5 Connecting the binary input and output signals

Auxiliary power and signals are connected using voltage connectors. Signal wires are connected to a female connector, see figure 31, which is then plugged into the corresponding male connector, see figure 32, located at the rear of the IED. For location of BIM, BOM and IOM refer to section "Rear side connectors". Connection diagrams for BIM, BOM and IOM are shown in figure 20, figure 25 and figure 27.

If the IED is equipped with a test-switch of type RTXP 24 COMBIFLEX wires with 20 A sockets, 1.5mm² (AWG16) conductor area must be used to connect the auxiliary power.

Procedure

1. Connect signals to the female connector
   All wiring to the female connector should be done before it is plugged into the male part and screwed to the case. The conductors can be of rigid type (solid, stranded) or of flexible type.
   The female connectors accept conductors with a cross section area of 0.2-2.5 mm^2 (AWG 24-14). If two conductors are used in the same terminal, the maximum permissible cross section area is 0.2-1 mm^2 (AWG 24-18).
   If two conductors, each with area 1.5 mm^2 (AWG 16) need to be connected to the same terminal, a ferrule must be used, see figure 33. This ferrule, is applied with the by Phoenix recommended crimping tool. No soldering is needed. Wires with a smaller gauge can be inserted directly into the female

connector receptacle and the fastening screw shall be tightened with a torque of 0.4 Nm (This torque applies to all binary connectors).

2. Plug the connector to the corresponding back-side mounted male connector
3. Lock the connector by fastening the lock screws

xx02000742.vsd

Figure 31: A female connector

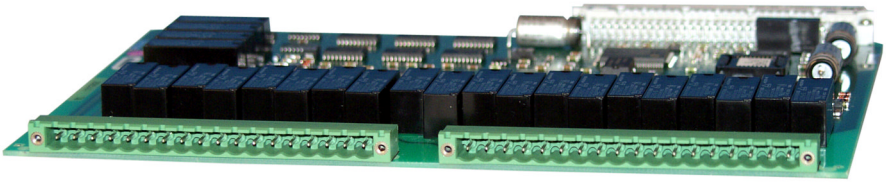

Figure 32: Board with male connectors

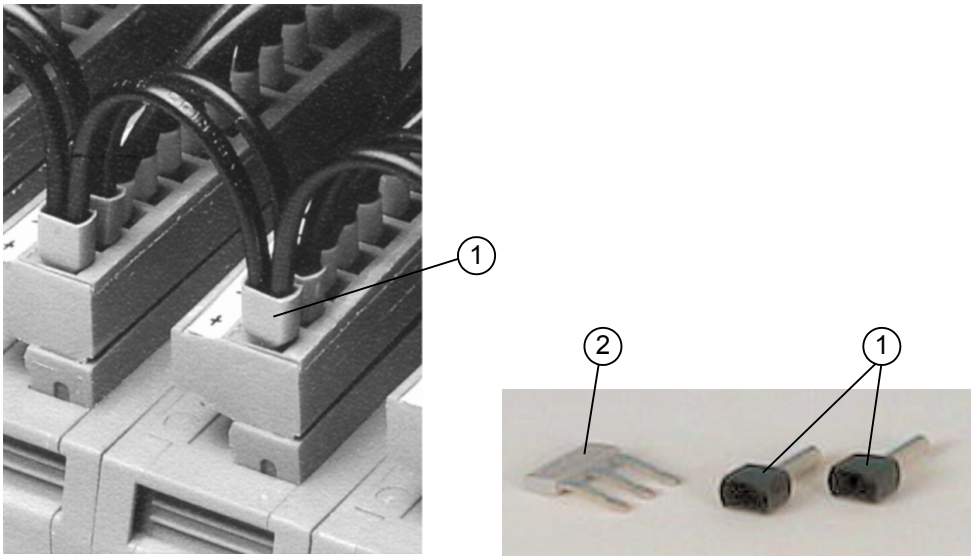

xx06000168.vsd

Figure 33: Cable connectors

PosNo	Description
1	Is ferrule,
2	A bridge connector, is used to jump terminal points in a connector.

5.4.6 Making the screen connection

When using screened cables always make sure screens are earthed and connected according to applicable engineering methods. This may include checking for appropriate earthing points near the IED, for instance, in the cubicle and/or near the source of measuring. Ensure that earth connections are made with short (max. 10 cm) conductors of an adequate cross section, at least 6 mm^2 (AWG10) for single screen connections.

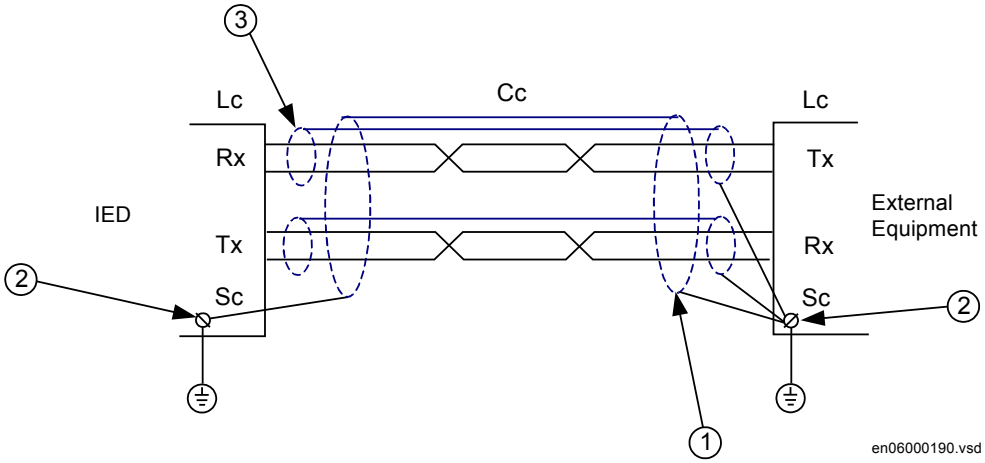

Figure 34: Communication cable installation.

PosNo	Description
1	Outer shield
2	Protective earth screw
3	Inner shield

Inner shielding of the cable shall be earthed at the external equipment end only. At the IED terminal end, the inner shield must be isolated from protective earth.

5.5 Making the optical connections

5.5.1 Connecting station communication interfaces

The IED can be equipped with an optical ethernet module (OEM), see figure 22, needed for IEC 61850 communication and a serial communication module (SLM), see figure 22 for LON, SPA or IEC 60870–5–103 communication. In such cases optical ports are provided on the rear side of the case for connection of the optical fibers. For location of OEM and SLM, refer to section "Rear side connectors".

- Optical ports X311: A, B (Tx, Rx) and X311: C, D (Tx, Rx) on OEM are used for IEC 61850-8-1 communication. Connectors are of ST type. When OEM is used, the protection plate for the galvanic connection must not be removed.
- Optical port X301: A, B (Tx, Rx) on SLM module is used for SPA or IEC 60870-5-103 communication. Connectors are of ST type (glass) or HFBR Snap in (plastic).
- Optical port X301: C, D (Tx, Rx) on SLM module is used for LON communication. Connectors are of ST type (glass) or HFBR Snap in (plastic).

The optical fibers have Transmission (Tx) and Reception (Rx) connectors, and they should be attached to the Tx and Rx connectors of OEM and SLM module (Tx cable to Rx connector, Rx cable to Tx connector).

Connectors are generally color coded; connect blue or dark grey cable connectors to blue or dark grey (receive) back-side connectors. Connect black or grey cable connectors to black or grey (transmit) back-side connectors.

The fiber optical cables are very sensitive to handling. Do not bend too sharply. The minimum curvature radius is 15 cm for the plastic fiber cables and 25 cm for the glass fiber cables. If cable straps are used to fix the cables, apply with loose fit.
Always hold the connector, never the cable, when connecting or disconnecting optical fibers. Do not twist, pull or bend the fiber. Invisible damage may increase fiber attenuation thus making communication impossible.

Please, strictly follow the instructions from the manufacturer for each type of optical cables/connectors.

5.5.2 Connecting remote communication interfaces LDCM

The Line Data Communication Module (LDCM), see figure 22 is the hardware used for the transfer of binary and analog signal data between IEDs in different protection schemes on the IEEE/ANSI C37.94 protocol. The optical ports on the rear side of the IED are X302, X303, X312 and X313. For location of LDCM, refer to section "Rear side connectors".

5.6 Installing the serial communication cable for RS485

5.6.1 RS485 serial communication module

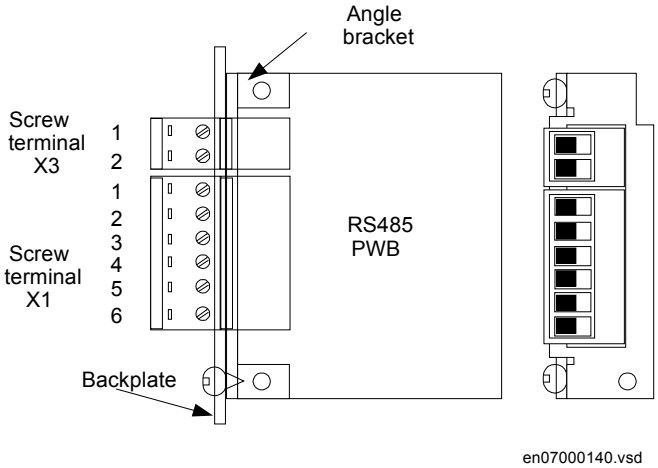

Figure 35: The connection plate to the backplate with connectors and screws. This figure also shows the pin numbering from the component side

Pin	Name 2-wire	Name 4-wire	Description
x3:1			soft ground
x3:2			soft ground
x1:1	RS485 +	TX+	Receive/transmit high or transmit high
x1:2	RS485 –	TX-	Receive/transmit low or transmit low
x1:3	Term	T-Term	Termination resistor for transmitter (and receiver in 2-wire case) (connect to TX+)
x1:4	reserved	R-Term	Termination resistor for receiver (connect to RX+)
x1:5	reserved	RX-	Receive low
x1:6	reserved	RX+	Receive high
2–wire:	Connect pin X1:1 to pin X1:6 and pin X1:2 to pin X1:5.		
Termination (2-wire):	Connect pin X1:1 to pin X1:3		
Termination (4-wire):	Connect pin X1:1 to pin X1:3 and pin X1:4 to pin X1:6		

The distance between earth points should be < 1200 m (3000 ft), see figure 36 and 37. Only the outer shielding is connected to the protective earth at the IED. The inner and outer shieldings are connected to the protective earth at the external equipment. Use insulating tape for the inner shield to prevent contact with the protective earth. Make sure that the terminals are properly earthed with as short connections as possible from the earth screw, for example to an earthed frame.

The IED and the external equipment should preferably be connected to the same battery.

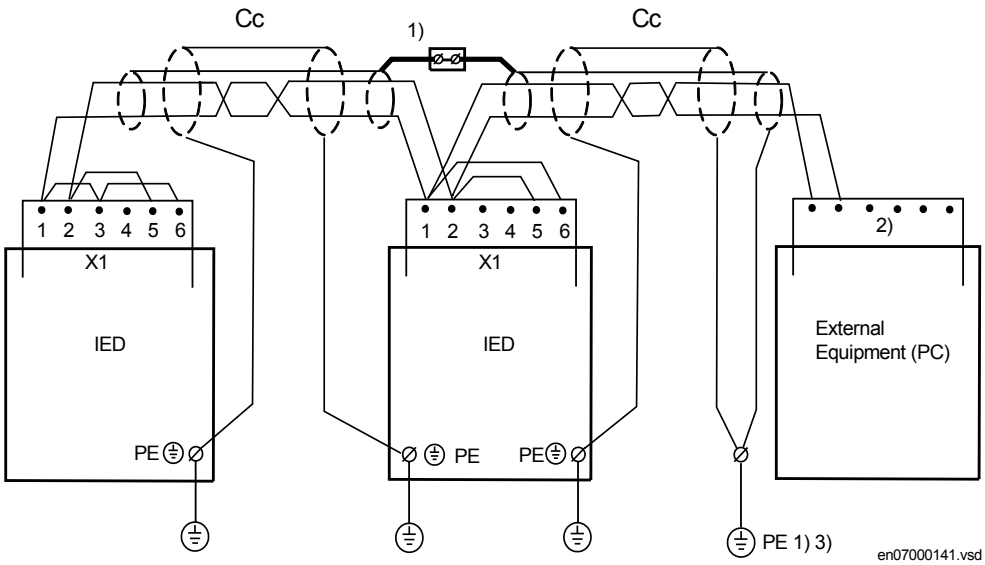

Figure 36: Communication cable installation, 2-wire

Where:

1	The inner shields shall be connected together (with an isolated terminal block) and only have **one earthing point** in the whole system, preferably at the external equipment (PC). The outer shield shall be connected to Protective Earth (PE) in every cable end that is, to PE at all IED terminals and to PE at External equipment (PC). The first **IED** will have only one cable end but all others of course two.
2	Connect according to installation instructions for the actual equipment, observe the 120 ohms termination.
3	The protective earth should be close to the external equipment (< 2m)
Cc	Communication cable
PE	Protective earth screw

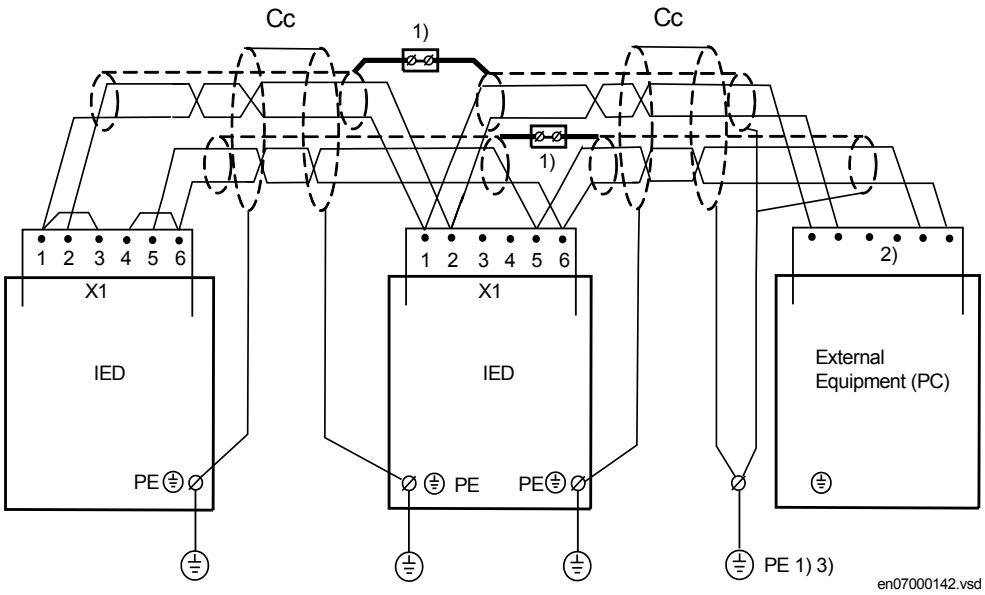

Figure 37: Communication cable installation, 4-wire

Where:

1 The inner shields shall be connected together (with an isolated terminal block) and only have **one earthing point** in the whole system, preferably at the external equipment (PC). The outer shield shall be connected to Protective Earth (PE) in every cable end that is, to PE at all IED terminals and to PE at External equipment (PC). The first **IED** will have only one cable end but all others of course two.

2 Connect according to installation instructions for the actual equipment, observe the 120 ohms termination.

3 The protective earth should be close to the external equipment (< 2m)

Cc Communication cable

PE Protective earthscrew

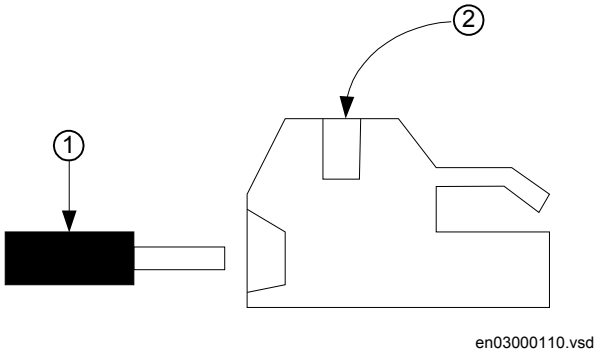

Figure 38: Cable contact, Phoenix: MSTB2.5/6-ST-5.08 1757051

Where:

1 is cable

2 is screw

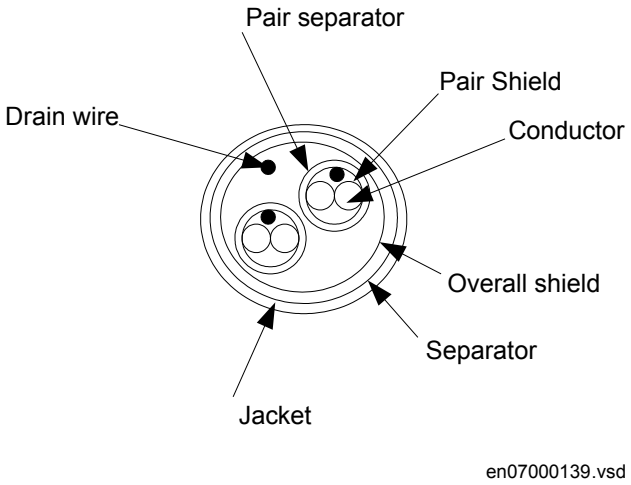

Figure 39: Cross section of communication cable

The EIA standard RS-485 specifies the RS485 network. An informative excerpt is given in section "Installing the serial communication cable for RS485 SPA/IEC".

5.6.2 Installing the serial communication cable for RS485 SPA/IEC

Informative excerpt from EIA Standard RS-485 - Electrical Characteristics of Generators and Receivers for Balanced Digital Multipoint Systems

RS-485 Wire - Media dependent Physical layer

1 Normative references

EIA Standard RS-485 - Electrical Characteristics of Generators and Receivers for Balanced Digital Multipoint Systems

2 Transmission method

RS-485 differential bipolar signaling

2.1 Differential signal levels

Two differential signal levels are defined:

A+ =line A positive with respect to line B

A- =line A negative with respect to line B

2.2 Galvanic isolation

The RS485 circuit shall be isolated from earth by:

Riso ≥ 10 MΩ

Ciso ≤ 10 pF

Three isolation options exist:

a) The entire node electronics can be galvanically isolated

b) The bus interface circuit can be isolated form the rest of node electronics by optoisolators, transformer coupling or otherwise.

c) The RS485 chip can include built-in isolation

2.3 Bus excitation and signal conveyance

2.3.1 Requirements

a) The RS485 specification requires the Signal A and Signal B wires.

b) Each node also requires (5 V) Excitation of the RS485 termination network.

c) Vim - the common mode voltage between any pair of RS485 chips may not exceed 10 V.

d) A physical ground connection between all RS485 circuits will reduce noise.

2.3.2 Bus segment termination network

The termination network below required at each end of each Bus Ph-segment.

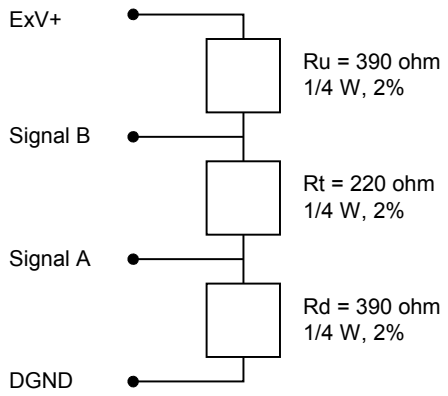

ExV is supplied by the Node at end of the Bus Segment

en03000112.vsd

Figure 40: RS-485 bus segment termination

Table continues on next page

ExV is supplied by the Node at end of the Bus Segment

The specifications of the components are:

a) Ru	+ 5 V to Signal B	= 390 Ω, 0.25 W ±2.5%
b) Rt	Signal B to Signal A	= 220 Ω, 0.25 W ±2.5%
c) Rd	Signal A to GND	= 390 Ω, 0.25 W ±2.5%

2.3.3 Bus power distribution

The end node in each Ph-segment applies 5 V bus excitation power to the Termination network via the Excitation pair (ExV+ and GND) used in the Type 3 Physical layer specification.

5.6.3 Data on RS485 serial communication module cable

Type:	Twisted-pair S-STP (Screened – Screened Twisted Pair)
Shield:	Individual foil for each pair with overall copper braid
Length:	Maximum 1200 m (3000 ft) from one system earth to the next system earth (includes length from platform point to system earth on both sides)
Temp:	According to application
Impedance:	120 Ω
Capacitance:	Less than or equal to 42 pF/m
Example:	Belden 9841,Alpha wire 6412, 6413

5.7 Installing the GPS antenna

5.7.1 Antenna installation

The antenna is mounted on a console for mounting on a horizontal or vertical flat surface or on an antenna mast.

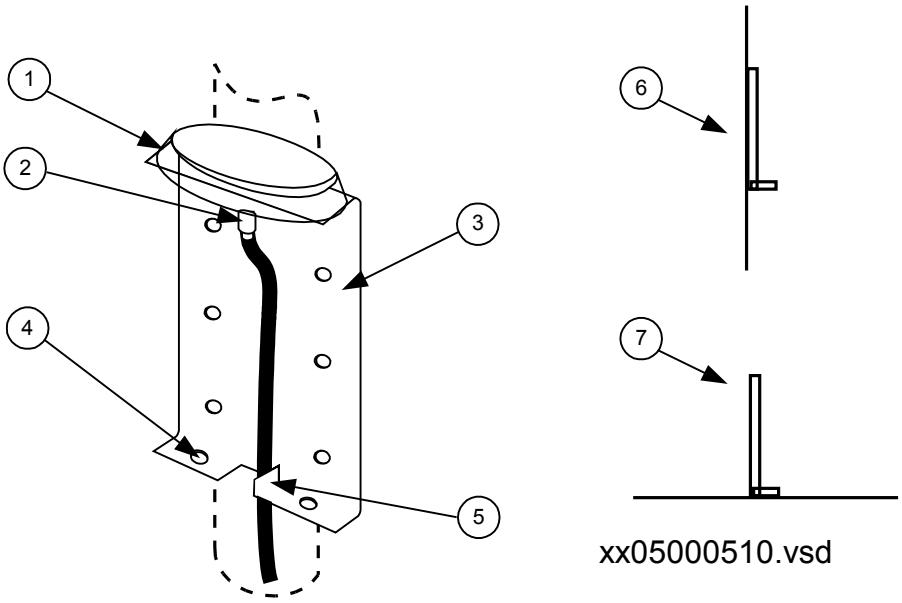

PosNO	Description
1	GPS antenna
2	TNC connector
3	Console, 78x150 mm
4	Mounting holes 5.5 mm
5	Tab for securing of antenna cable
6	Vertical mounting position (on antenna mast etc.)
7	Horizontal mounting position

Mount the antenna and console clear of flat surfaces such as buildings walls, roofs and windows to avoid signal reflections. If necessary, protect the antenna from animals and birds which can affect signal strength. Also protect the antenna against lightning.

Always position the antenna and its console so that a continuous clear line-of-sight visibility to all directions is obtained, preferably more than 75%. A minimum of 50% clear line-of-sight visibility is required for un-interrupted operation.

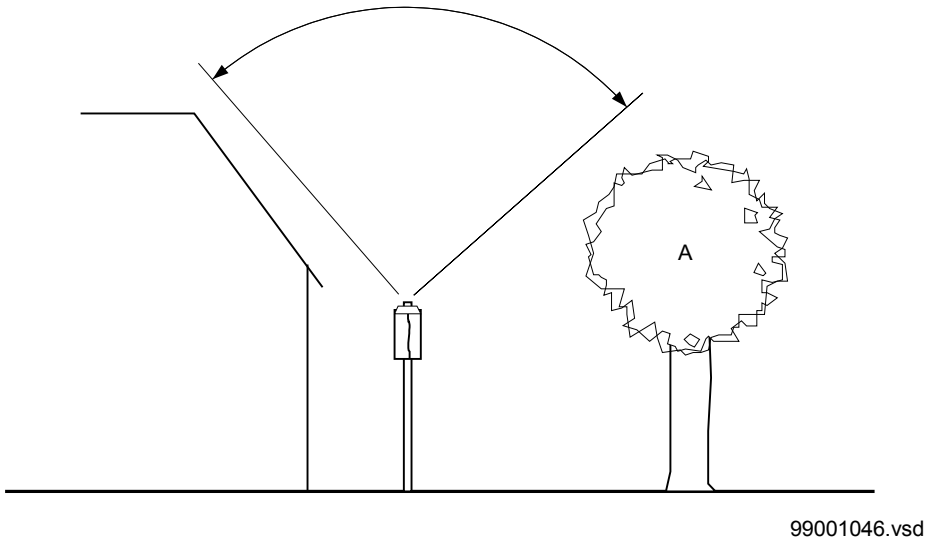

Figure 41: Antenna line-of-sight

5.7.2 Electrical installation

Use a 50 ohm coaxial cable with a male TNC connector on the antenna end and a male SMA connector on the receiver end to connect the antenna to the IED. Choose cable type and length so that the total attenuation is max. 26 dB at 1.6 GHz. A suitable antenna cable is supplied with the antenna.

The antenna has a female TNC connector to the antenna cable. For location of GPS module, refer to section "Rear side connectors". Connection diagram for GPS module is shown in figure 24.

Make sure that the antenna cable is not charged when connected to the antenna or to the receiver. Short-circuit the end of the antenna cable with some metal device, then connect to the antenna. When the antenna is connected to the cable, connect the cable to the receiver. The IED must be switched off when the antenna cable is connected.

5.7.3 Lightning protection

The antenna should be mounted with adequate lightning protection, that is the antenna mast must not rise above a neighboring lightning conductor.

Section 6 Checking the external optical and electrical connections

About this chapter

This chapter describes what to check to ensure correct connection to the external circuitry, such as the auxiliary power supply, CT's and VT's. These checks must be made with the protection IED de-energized.

6.1 Overview

The user must check the installation which includes verifying that the IED is connected to the other parts of the protection system. This is done with the IED and all connected circuits de-energized.

6.2 Checking VT circuits

Check that the wiring is in strict accordance with the supplied connection diagram.

Correct all errors before continuing to test circuitry.

Test the circuitry.

- Polarity check
- VT circuit voltage measurement (primary injection test)
- Earthing check
- Phase relationship
- Insulation resistance check

The polarity check verifies the integrity of circuits and the phase relationships. The check should be performed as close to the IED as possible.

The primary injection test verifies the VT ratio and the wiring all the way through from the primary system to the IED. Injection must be performed for each phase-to-neutral circuit and each phase-to-phase pair. In each case voltages in all phases and neutral are measured.

6.3 Checking CT circuits

The CTs must be connected in accordance with the circuit diagram provided with the IED, both with regards to phases and polarity. The following tests shall be performed on every primary CT connected to the IED:

- Primary injection test to verify the current ratio of the CT, the correct wiring up to the protection IED and correct phase sequence connection (that is L1, L2, L3.)
- Polarity check to prove that the predicted direction of secondary current flow is correct for a given direction of primary current flow. This is an essential test for the proper operation of the differential function.
- CT secondary loop resistance measurement to confirm that the current transformer secondary loop dc resistance is within specification and that there are no high resistance joints in the CT winding or wiring.
- CT excitation test in order to confirm that the current transformer is of the correct accuracy rating and that there are no shorted turns in the current transformer windings. Manufacturer's design curves should be available for the current transformer to compare the actual results.
- Earthing check of the individual CT secondary circuits to verify that each three-phase set of main CTs is properly connected to the station earth and only at one electrical point.
- Insulation resistance check.
- Phase identification of CT shall be made.

Both primary and secondary sides must be disconnected from the line and IED when plotting the excitation characteristics.

If the CT secondary circuit earth connection is removed without the current transformer primary being de-energized, dangerous voltages may result in the secondary CT circuits.

6.4 Checking the power supply

Check that the auxiliary supply voltage remains within the permissible input voltage range under all operating conditions. Check that the polarity is correct before powering the IED.

6.5 Checking the binary I/O circuits

6.5.1 Binary input circuits

Preferably, disconnect the binary input connector from the binary input cards. Check all connected signals so that both input level and polarity are in accordance with the IEDs specifications.

6.5.2 Binary output circuits

Preferably, disconnect the binary output connector from the binary output cards. Check all connected signals so that both load and polarity are in accordance with IED specifications.

6.6 Checking optical connections

Check that the Tx and Rx optical connections are correct.

An IED equipped with optical connections requires a minimum depth of 180 mm for plastic fiber cables and 275 mm for glass fiber cables. The allowed minimum bending radius has to be checked from the optical cable manufacturer.

Section 7 Energizing the IED

About this chapter

This chapter describes the start-up sequence and what to check once the IED has been energized.

7.1 Check the IED operation

Check all connections to external circuitry to ensure that the installation was made correctly, before energizing the IED and carrying out the commissioning procedures.

The user could also check the software version, the IED's serial number and the installed modules and their ordering number to ensure that the IED is according to delivery and ordering specifications.

Energize the power supply of the IED to start it up. This could be done in number of ways, from energizing a whole cubicle to energizing a single IED. The user should re-configure the IED to activate the hardware modules in order to enable the self supervision function to detect possible hardware errors. The IED time must be set. The self-supervision function in the **Main menu/Diagnostics/Monitoring** menu in local HMI should also be checked to verify that the IED operates properly.

7.2 Energizing the IED

When the IED is energized, the green LED instantly starts flashing. After approximately 55 seconds the window lights up and the window displays ‘IED Startup’. The main menu is displayed and the upper row should indicate ‘Ready’ after about 90 seconds. A steady green light indicates a successful startup.

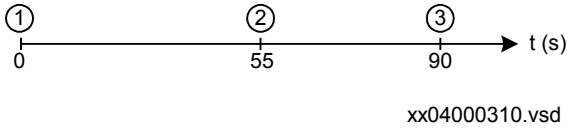

Figure 42: Typical IED start-up sequence

1 IED energized. Green LED instantly starts flashing
2 LCD lights up and "IED startup" is displayed
3 The main menu is displayed. A steady green light indicates a successful startup.

If the upper row in the window indicates ‘Fail’ instead of ‘Ready’ and the green LED flashes, an internal failure in the IED has been detected. See section 3.3 "Checking the self supervision function" in this chapter to investigate the fault.

An example of the local HMI is shown in figure 43.

7.3 Design

The different parts of the medium size local HMI are shown in figure 43. The local HMI exists in an IEC version and in an ANSI version. The difference is on the keypad operation buttons and the yellow LED designation.

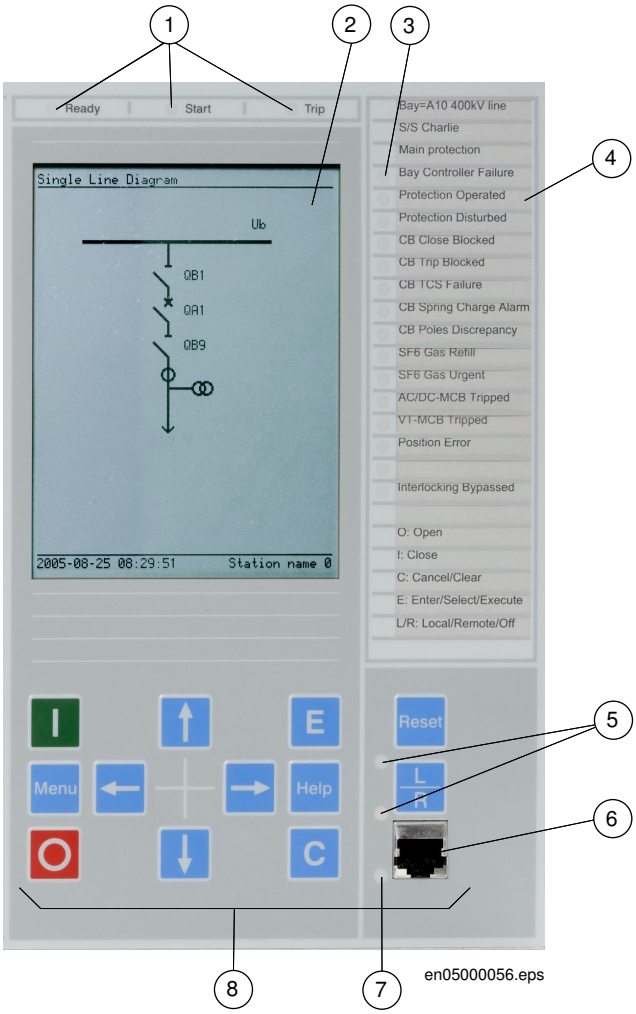

Figure 43: Medium size graphic HMI

1 Status indication LEDs
2 LCD
3 Indication LEDs
4 Label
5 Local/Remote LEDs
6 RJ45 port
7 Communication indication LED
8 Keypad

7.4 Checking the self supervision signals

7.4.1 Reconfiguring the IED

I/O modules configured as logical I/O modules (BIM, BOM or IOM) are supervised.

I/O modules that are not configured are not supervised.

Each logical I/O module has an error flag that indicates signal or module failure. The error flag is also set when the physical I/O module of the correct type is not detected in the connected slot.

7.4.2 Setting the IED time

This procedure describes how to set the IED time from the local HMI.

1. Display the set time dialog.
   Navigate to **Main menu/Settings/Time/System time**
   Press the *E* button to enter the dialog.
2. Set the date and time.
   Use the *Left* and *Right* arrow buttons to move between the time and date values (year, month, day, hours, minutes and seconds). Use the *Up* and *Down* arrow buttons to change the value.
3. Confirm the setting.
   Press the *E* button to set the calendar and clock to the new values.

7.4.3 Checking the self supervision function

7.4.3.1 Determine the cause of an internal failure

This procedure describes how to navigate the menus in order to find the cause of an internal failure when indicated by the flashing green LED on the HMI module.

Procedure

1. Display the general diagnostics menu.
   Navigate the menus to:
   Diagnostics/IED status/General
2. Scroll the supervision values to identify the reason for the failure.
   Use the arrow buttons to scroll between values.

7.4.4 Self supervision HMI data

Table 10: Signals from the General menu in the diagnostics tree.

Indicated result	Possible reason	Proposed action
InternFail OK	No problem detected.	None.
InternFail Fail	A failure has occurred.	Check the rest of the indicated results to find the fault.
InternWarning OK	No problem detected.	None.
InternWarning Warning	A warning has been issued.	Check the rest of the indicated results to find the fault.
NUM-modFail OK	No problem detected.	None.
NUM-modFail Fail	The main processing module has failed.	Contact your ABB representative for service.
NUM-modWarning OK	No problem detected.	None.
NUM-modWarning Warning	There is a problem with: • the real time clock. • the time synchronization.	Set the clock. If the problem persists, contact your ABB representative for service.
ADC-module OK	No problem detected.	None.
ADC-module Fail	The AD conversion module has failed.	Contact your ABB representative for service.
CANP 9 BIM1 Fail	IO module has failed.	Check that the IO module has been configured and connected to the IOP1- block. If the problem persists, contact your ABB representative for service.
RealTimeClock OK	No problem detected.	None.
RealTimeClock Warning	The real time clock has been reset.	Set the clock.
TimeSync OK	No problem detected.	None.
TimeSync Warning	No time synchronization.	Check the synchronization source for problems. If the problem persists, contact your ABB representative for service.

Section 8 Set up the PCM600 communication link per IED

About this chapter

This chapter describes the communication between the IED and PCM600.

8.1 Setting up communication between PCM600 and the IED

The communication between the IED and PCM600 is independent of the used communication protocol within the substation or to the NCC.

The communication media is always Ethernet and the used protocol is TCP/IP.

Each IED has an Ethernet interface connector on the front and on the rear side. The Ethernet connector can be used for communication with PCM600.

When an Ethernet based station protocol is used, PCM600 communication can use the same Ethernet port and IP address.

For the connection of PCM600 to the IED two basic variants have to be considered.

- Direct point to point link between PCM600 and the IED front port. The front port can be seen as a service port.
- Indirect link via a station LAN or from remote via a network.

The physical connection and the IP address must be configured in both cases to enable communication.

The communication procedures are in both cases the same.

1. If needed, set the IP address for the IEDs.
2. Set up the PC or workstation for a direct link (point to point), or
3. Connect the PC or workstation to the LAN/WAN network.
4. Configure the IED IP addresses in the PCM600 project for each IED to match the IP addresses of the physical IEDs.

Setting up IP addresses

The IP address and the corresponding mask can be set via the LHMI for each available Ethernet interface in the IED. Each Ethernet interface has a default

factory IP address when the complete IED is delivered. This is not given when an additional Ethernet interface is installed or an interface is replaced.

- The default IP address for the IED front port is 10.1.150.3 and the corresponding subnetwork mask is 255.255.255.0, which can be set via the local HMI path **Main menu/Settings/General settings/Communication/Ethernet configuration/Front port**.
- The default IP address for the IED rear port is 192.168.1.10 and the corresponding subnetwork mask is 255.255.0.0, which can be set via the local HMI path **Main menu/Settings/General settings/Communication/Ethernet configuration/Rear OEM - port AB** and **Rear OEM - port CD**.

The front and rear port IP addresses cannot belong to the same subnet or communication will fail. It is recommended to change the IP address of the front port, if the front and rear port are set to the same subnet.

Setting up the PC or workstation for point to point access to IEDs front port

A special cable is requested to connect two physical Ethernet interfaces together without a hub, router, bridge or switch in between. The Tx and Rx signal wires must be crossed in the cable to connect Tx with Rx on the other side and vice versa. These cables are known as null-modem cable or cross-wired cable. The maximum length should be about 2 m. The connector type is RJ-45, see Figure 44.

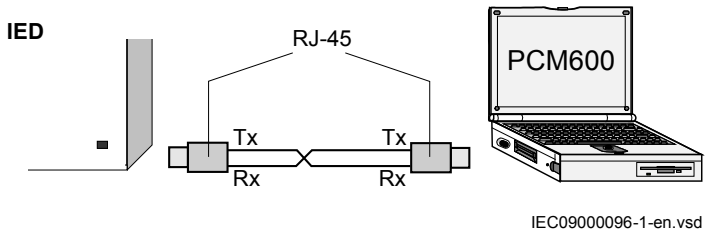

Figure 44: Point to point link between IED and PCM600 using a null-modem cable

The following description is an example valid for standard PCs using Microsoft Windows operating system. The example is taken from a Laptop with one Ethernet interface.

Administrator rights are requested to change the PC communication setup. Some PCs have the feature to automatically detect that Tx signals from the IED are received on the Tx pin on the PC. Thus straight (standard) Ethernet cable can be used.

1. Select *Network Connections* in the PC, see Figure 45.

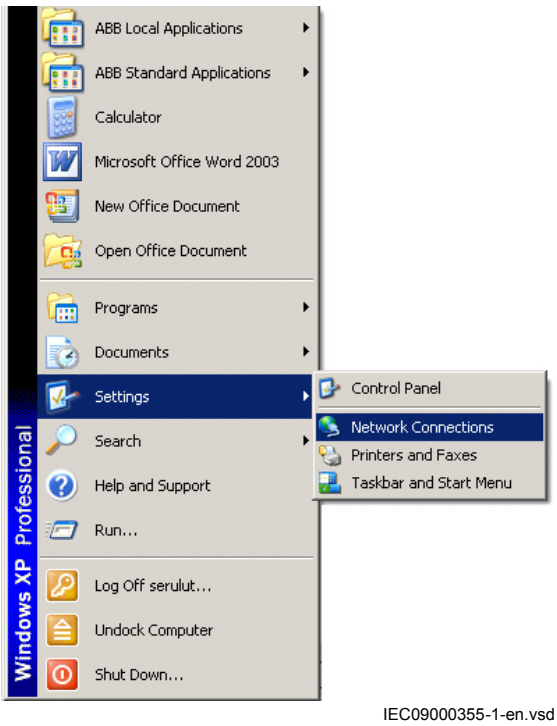

Figure 45: Select: Network connections

2. Select *Properties* in the status window, see Figure 46.

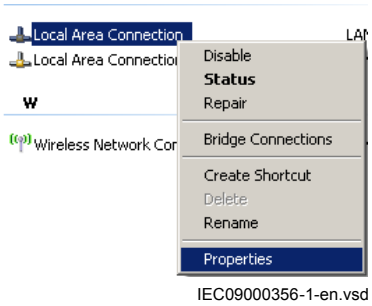

Figure 46: Right-click Local Area Connection and select Properties

3. Select the TCP/IP protocol from the list of configured components using this connection and click *Properties*, see Figure 47.

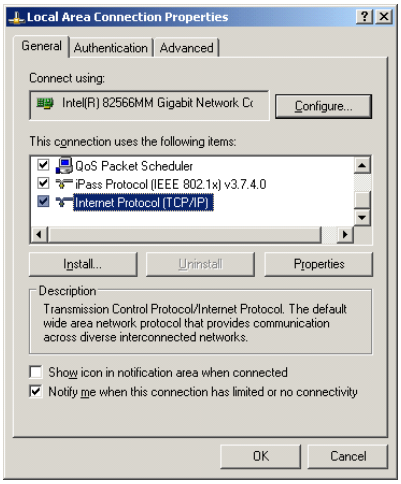

IEC09000357-1-en.vsd

Figure 47: Select the TCP/IP protocol and open Properties

4. Select *Use the following IP address* and define *IP address* and *Subnet mask*, see Figure 48. The IP address must be different from the IP address chosen for the IED.

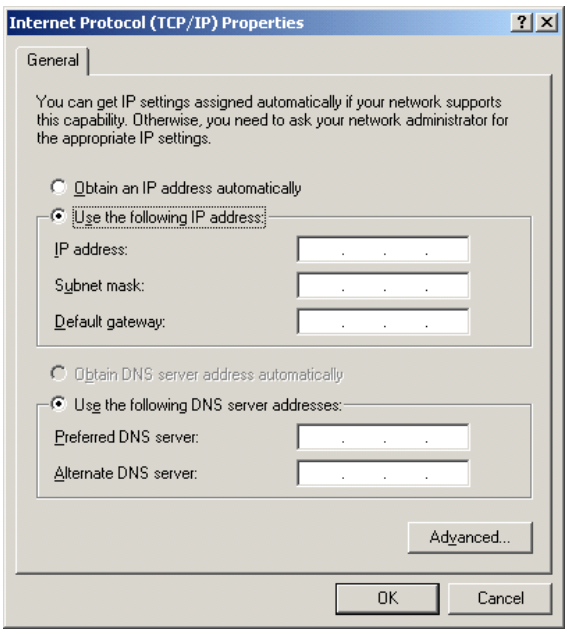

IEC09000658-1-en.vsd

Figure 48: Select: Use the following IP address

5. Use the *ping* command to verify connectivity with the IED.
6. Close all open windows and start PCM600.

Setting up the PC to access the IED via a network

This task depends on the used LAN/WAN network. PC and IED must belong to the same subnetwork.

Section 9 Establishing connection and verifying the SPA/IEC- communication

About this chapter

This chapter contains instructions on how to establish connection and verify that the SPA/IEC-communication operates as intended, when the IED is connected to a monitoring or control system via the rear SPA/IEC port.

9.1 Entering settings

If the IED is connected to a monitoring or control system via the rear SPA/IEC port, the SPA/IEC port has to be set either for SPA or IEC use.

9.1.1 Entering SPA settings

The SPA/IEC port is located on the rear side of the IED. Two types of interfaces can be used:

- for plastic fibres with connector type HFBR
- for glass fibres with connectors type ST

When using the SPA protocol, the rear SPA/IEC port must be set for SPA use.

Procedure

1. Set the operation of the rear optical SPA/IEC port to “SPA”.
   The operation of the rear SPA port can be found on the local HMI under **Main menu/Settings/General settings/Communication/SLM configuration/Rear optical SPA/IEC port/Protocol selection**
   When the setting is entered the IED restarts automatically. After the restart the SPA/IEC port operates as a SPA port.
2. Set the slave number and baud rate for the rear SPA port
   The slave number and baud rate can be found on the local HMI under **Main menu/Settings/General settings/Communication/SLM configuration/Rear optical SPA/IEC port/SPA**
   Set the same slave number and baud rate as set in the SMS system for the IED.

9.1.2 Entering IEC settings

When using the IEC protocol, the rear SPA/IEC port must be set for IEC use.

Two types of interfaces can be used:

- for plastic fibres with connector type HFBR
- for glass fibres with connectors type ST

Procedure

1. Set the operation of the rear SPA/IEC port to “IEC”.
   The operation of the rear SPA/IEC port can be found on the local HMI under **Main menu/Settings/General settings/Communication/SLM configuration/Rear optical SPA/IEC port/Protocol selection**
   When the setting is entered the IED restarts automatically After the restart the selected IEC port operates as an IEC port.
2. Set the slave number and baud rate for the rear IEC port
   The slave number and baud rate can be found on the local HMI under **Main menu/Settings/General settings/Communication/SLM configuration/Rear optical SPA/IEC port/IEC60870–5–103**
   Set the same slave number and baud rate as set in the IEC master system for the IED.

9.2 Verifying the communication

To verify that the rear communication with the SMS/SCS system is working, there are some different methods. Choose one of the following.

9.2.1 Verifying SPA communication

Procedure

1. Use a SPA-emulator and send “RF” to the IED. The answer from the IED should be “IED 670 ”.
2. Generate one binary event by activating a function, which is configured to an event block where the used input is set to generate events on SPA. The configuration must be made with the PCM600 software. Verify that the event is presented in the SMS/SCS system.

During the following tests of the different functions in the IED, verify that the events and indications in the SMS/SCS system are as expected.

9.2.2 Verifying IEC communication

To verify that the IEC communication with the IEC master system is working, there are some different methods. Choose one of the following.

Procedure

1. Check that the master system time-out for response from the IED, for example after a setting change, is > 40 seconds.
2. Use a protocol analyzer and record the communication between the IED and the IEC master. Check in the protocol analyzer's log that the IED answers the master messages.
3. Generate one binary event by activating a function that is configured to an event block where the used input is set to generate events on IEC. The configuration must be made with the PCM600 software. Verify that the event is presented in the IEC master system.

During the following tests of the different functions in the IED, verify that the events and indications in the IEC master system are as expected.

9.3 Fibre optic loop

The SPA communication is mainly used for SMS. It can include different numerical IEDs with remote communication possibilities. The fibre optic loop can contain < 20-30 IEDs depending on requirements on response time. Connection to a personal computer (PC) can be made directly (if the PC is located in the substation) or by telephone modem through a telephone network with ITU (CCITT) characteristics.

Table 11: Max distances between IEDs/nodes

glass	< 1000 m according to optical budget
plastic	< 25 m (inside cubicle) according to optical budget

Figure 49: Example of SPA communication structure for a station monitoring system

Where:

1 A separate minute pulse synchronization from station clock to obtain ± 1 ms accuracy for time tagging within the substation might be required.

9.4 Optical budget calculation for serial communication with SPA/IEC

Table 12: Example

	Distance 1 km Glass	Distance 25 m Plastic
Maximum attenuation	- 11 dB	- 7 dB
4 dB/km multi mode: 820 nm - 62.5/125 um	4 dB	-
0.16 dB/m plastic: 620 nm - 1mm	-	4 dB
Margins for installation, aging, and so on	5 dB	1 dB
Losses in connection box, two contacts (0.5 dB/contact)	1 dB	-
Losses in connection box, two contacts (1 dB/contact)	-	2 dB
Margin for 2 repair splices (0.5 dB/splice)	1 dB	-
Maximum total attenuation	11 dB	7 dB

Section 10 Establishing connection and verifying the LON communication

About this chapter

This chapter explains how to set up LON communication and how to verify that LON communication is up and running.

10.1 Communication via the rear ports

10.1.1 LON communication

LON communication is normally used in substation automation systems. Optical fiber is used within the substation as the physical communication link.

The test can only be carried out when the whole communication system is installed. Thus, the test is a system test and is not dealt with here.

The communication protocol Local Optical Network (LON) is available for 670 IED series as an option.

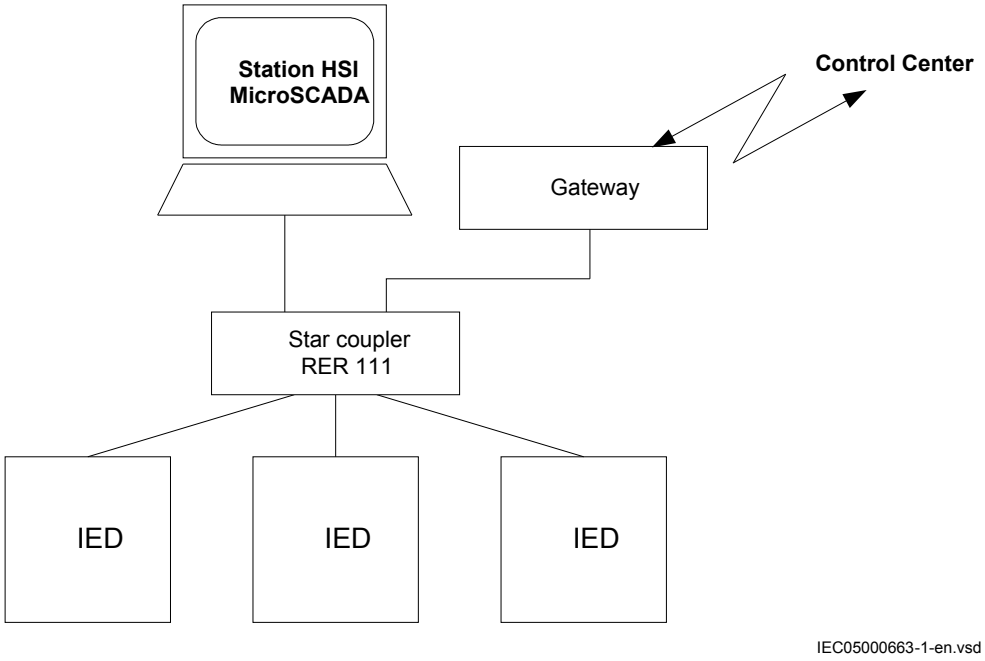

Figure 50: Example of LON communication structure for a substation automation system

An optical network can be used within the substation automation system. This enables communication with the IEDs in the 670 series through the LON bus from the operator's workplace, from the control center and also from other IEDs via bay-to-bay horizontal communication.

The fibre optic LON bus is implemented using either glass core or plastic core fibre optic cables.

Table 13: Specification of the fibre optic connectors

	Glass fibre	Plastic fibre
Cable connector	ST-connector	snap-in connector
Cable diameter	62.5/125 m	1 mm
Max. cable length	1000 m	10 m
Wavelength	820-900 nm	660 nm
Transmitted power	-13 dBm (HFBR-1414)	-13 dBm (HFBR-1521)
Receiver sensitivity	-24 dBm (HFBR-2412)	-20 dBm (HFBR-2521)

10.2.1 The LON Protocol

The LON protocol is specified in the LonTalkProtocol Specification Version 3 from Echelon Corporation. This protocol is designed for communication in control networks and is a peer-to-peer protocol where all the devices connected to the network can communicate with each other directly. For more information of the bay-to-bay communication, refer to the section Multiple command function.

10.2.2 Hardware and software modules

The hardware needed for applying LON communication depends on the application, but one very central unit needed is the LON Star Coupler and optical fibres connecting the star coupler to the IEDs. To interface the IEDs from MicroSCADA, the application library LIB670 is required.

The HV Control 670 software module is included in the LIB520 high-voltage process package, which is a part of the Application Software Library within MicroSCADA applications.

The HV Control 670 software module is used for control functions in IEDs in the 670 series. This module contains the process picture, dialogues and a tool to generate the process database for the control application in MicroSCADA.

Use the LON Network Tool (LNT) to set the LON communication. This is a software tool applied as one node on the LON bus. To communicate via LON, the IEDs need to know

- The node addresses of the other connected IEDs.
- The network variable selectors to be used.

This is organized by LNT.

The node address is transferred to LNT via the local HMI by setting the parameter *ServicePinMsg* = *Yes*. The node address is sent to LNT via the LON bus, or LNT can scan the network for new nodes.

The communication speed of the LON bus is set to the default of 1.25 Mbit/s. This can be changed by LNT.

The setting parameters for the LON communication are set via the local HMI. Refer to the technical reference manual for setting parameters specifications.

The path to LON settings in the local HMI is **Main menu/Settings/General settings/Communication/SLM configuration/Rear optical LON port**

If the LON communication from the IED stops, caused by setting of illegal communication parameters (outside the setting range) or by another disturbance, it is possible to reset the LON port of the IED.

By setting the parameter *LONDefault* = *Yes*, the LON communication is reset in the IED, and the addressing procedure can start from the beginning again.

Path in the local HMI under **Main menu/Settings/General settings/ Communication/SLM configuration/Rear optical LON port**

These parameters can only be set with the LON Network Tool (LNT).

Table 14: Setting parameters for the LON communication

Parameter	Range	Default	Unit	Parameter description
DomainID	0	0	-	Domain identification number
SubnetID*	0 - 255 Step: 1	0	-	Subnet identification number
NodeID*	0 - 127 Step: 1	0	-	Node identification number
*Can be viewed in the local HMI				

Path in the local HMI under **Main menu/Settings/General settings/ Communication/SLM configuration/Rear optical LON port**

These parameters can only be set with the LON Network Tool (LNT).

Table 15: LON node information parameters

Parameter	Range	Default	Unit	Parameter description
NeuronID*	0 - 12	Not loaded	-	Neuron hardware identification number in hexadecimal code
Location	0 - 6	No value	-	Location of the node
*Can be viewed in the local HMI				

Path in the local HMI under **Main menu/Settings/General settings/ Communication/SLM configuration/Rear optical LON port**

Table 16: ADE Non group settings (basic)

Name	Values (Range)	Unit	Step	Default	Description
Operation	Off On	-	-	Off	Operation
TimerClass	Slow Normal Fast	-	-	Slow	Timer class

Path in the local HMI under **Main menu/Settings/General settings/ Communication/SLM configuration/Rear optical LON port**

Table 17: LON commands

Command	Command description
ServicePinMsg	Command with confirmation. Transfers the node address to the LON Network Tool.

10.2 Optical budget calculation for serial communication with LON

Table 18: Example

	Distance 1 km Glass	Distance10 m Plastic
Maximum attenuation	-11 dB	- 7 dB
4 dB/km multi mode: 820 nm - 62.5/125 um	4 dB	-
0.3 dB/m plastic: 620 nm - 1mm	-	3 dB
Margins for installation, aging, and so on	5 dB	2 dB
Losses in connection box, two contacts (0.75 dB/contact)	1.5 dB	-
Losses in connection box, two contacts (1dB/contact)	-	2 dB
Margin for repair splices (0.5 dB/splice)	0.5 dB	-
Maximum total attenuation	11 dB	7 dB

Section 11 Establishing connection and verifying the IEC 61850 communication

About this chapter

This chapter contains instructions on how to establish connection and verify that the IEC 61850 communication operates as intended, when the IED is connected to an Ethernet network via the optical ports of the OEM.

11.1 Overview

The rear OEM ports are used for substation bus (IEC 61850-8-1) communication.

11.2 Setting the station communication

To enable IEC 61850 communication the corresponding OEM ports must be activated. The rear OEM port AB and CD is used for IEC 61850-8-1 communication. For IEC 61850-8-1 redundant communication, both OEM port AB and CD are used exclusively.

To enable IEC 61850 station communication:

1. Enable IEC 61850-8-1 (substation bus) communication for port AB.
   1.1. Set values for the rear port AB.
   Navigate to: **Main menu/Settings/general settings/Communication/ Ethernet configuration/Rear OEM - port AB**
   Set values for *Mode*, *IPAddress* and *IPMask*. *Mode* must be set to *Normal*.
   Check that the correct IP address is assigned to the port.
   1.2. Enable IEC 61850-8-1 communication.
   Navigate to: **Main menu/Settings/General settings/Communication/ Station communication/IEC 61850-8-1**
   Set *Operation* to *On* and *GOOSE* to the port used (for example *OEM311_AB*).

11.3 Verifying the communication

Connect your PC to the nearby switch and ping the connected IED and the Substation Master PC, to verify that the communication is working (up to the transport layer). If it is possible to see all of them, then they can see each other.

The best way to verify the communication up to the application layer is to

- use a protocol analyzer, for example an Ethereal that is connected to the substation bus, and
- monitor the communication

Section 12 Configuring the IED and changing settings

About this chapter

This chapter describes how to change IED settings, either through a PC or the local HMI, and download a configuration to the IED in order to make commissioning possible.

The chapter does not contain instructions on how to create a configuration or calculate settings. Please consult the application manual for further information about how to calculate settings.

It takes a minimum of three minutes for the IED to save the new settings, during this time the DC supply must not be turned off.

The IED uses a FLASH disk for storing configuration data and process data like counters, object states, Local/Remote switch position etc. Since FLASH memory is used, measures have been taken in software to make sure that the FLASH disk is not worn out by too intensive storing of data. These mechanisms make it necessary to think about a couple of issues in order to not loose configuration data, especially at commissioning time.

After the commissioning is complete, the configuration data is always stored to FLASH, so that is not an issue. But other things, like objects states and the Local/Remote switch position is stored in a slightly different way, where the save of data to FLASH is performed more and more seldom to eliminate the risk of wearing out the FLASH disk. In worst case, the time between saves of this kind of data is around one hour.

This means, that to be absolutely sure that all data have been saved to FLASH, it is necessary to leave the IED with auxiliary power connected after all the commissioning is done (including setting the Local/Remote switch to the desired position) for at least one hour after the last commissioning action performed on the IED.

After that time has elapsed, it will be safe to turn the IED off, no data will be lost.

12.1 Overview

The customer specific values for each setting parameter and a configuration file have to be available before the IED can be set and configured, if the IED is not delivered with a configuration.

Use the configuration tools in PCM600 to verify that the IED has the expected configuration. A new configuration is done with the application configuration tool. The binary outputs can be selected from a signal list where the signals are grouped under their function names. It is also possible to specify a user-defined name for each input and output signal.

Each function included in the IED has several setting parameters, which have to be set in order to make the IED behave as intended. A factory default value is provided for each parameter. A setting file can be prepared using the Parameter Setting tool, which is available in PCM600.

All settings can be

- Entered manually through the local HMI.
- Written from a PC, either locally or remotely using SMS/SCS. Front or rear port communication has to be established before the settings can be written.

12.2 Entering settings through the local HMI

Procedure

1. Set each function included in the IED in the local HMI.
2. Browse to the function to be set and enter the appropriate value.
3. Find the parameters for each function in the local HMI

The operator's manual is structured in a similar way to the local HMI and provides a detailed guide to the use of the local HMI including paths in the menu structure and brief explanations of most settings and measurements. See the technical reference manual for a complete list of setting parameters for each function. Some of the included functions may not be used. In this case the user can set the parameter *Operation = Off* to disable the function.

12.3 Configuring analog CT inputs

The analog input channels must be configured to get correct measurement results as well as correct protection functionality. Because all protection algorithms in the IED utilize the primary system quantities, it is extremely important to make sure that connected current transformer settings are done properly. These data are calculated by the system engineer and normally set by the commissioner from the local HMI or from the SMS.

The analog inputs on the transformer input module are dimensioned for either 1A or 5A. Each transformer input module has a unique combination of current and voltage inputs. Make sure the input current rating is correct and that it matches the order documentation.

The primary CT data are entered via the HMI menu under **Main menu/Settings/ General Settings/Analog modules/AnalogInputs**

The following parameter shall be set for every current transformer connected to the IED:

Table 19: CT configuration

Parameter description	Parameter name	Range	Default
Rated CT primary current in A	CT Prim Input	from -10000 to +10000	0

This parameter defines the primary rated current of the CT. For two set of CTs with ratio 1000/1 and 1000/5 this parameter is set to the same value of 1000 for both CT inputs. Negative values (that is -1000) can be used in order to reverse the direction of the CT current by software for the differential function. This might be necessary if two sets of CTs have different star point locations in relation to the protected busbar. It is recommended that this parameter is set to zero, for all unused CT inputs.

For main CTs with 2A rated secondary current, it is recommended to connect the secondary wiring to the 1A input and to set the rated primary current to one half times its true value. For example, a CT with a primary secondary current ratio of 1000/2A can be treated as a 500/1A CT.

Take the rated permissive overload values for the current inputs into consideration.

12.4 Downloading settings and configuration from a PC

12.4.1 Writing an application configuration to the IED

When writing a configuration to the IED with the application configuration tool, the IED is automatically set in configuration mode. When the IED is set in configuration mode, all functions are blocked. The red LED on the IED flashes, and the green LED is lit while the IED is in the configuration mode.

When the configuration is written and completed, the IED is automatically set into normal mode. For further instructions please refer to the users manuals for PCM600.

Section 13 Verifying settings by secondary injection

About this chapter

This chapter describes how to verify that protection functions operate correctly and according to their settings. It is preferable that only the tested function is in operation.

13.1 Overview

IED test requirements:

- Calculated settings
- Application configuration diagram
- Signal matrix (SMT) configuration
- Terminal diagram
- Technical reference manual
- Three-phase test equipment
- PCM600

The setting and configuration of the IED must be completed before the testing can start.

The terminal diagram, available in the technical reference manual, is a general diagram of the IED.

Note that the same diagram is not always applicable to each specific delivery (especially for the configuration of all the binary inputs and outputs).

Therefore, before testing, check that the available terminal diagram corresponds to the IED.

The technical reference manual contains application and functionality summaries, function blocks, logic diagrams, input and output signals, setting parameters and technical data sorted per function.

The test equipment should be able to provide a three-phase supply of voltages and currents. The magnitude of voltage and current as well as the phase angle between voltage and current must be variable. The voltages and currents from the test equipment must be obtained from the same source and they must have minimal harmonic content. If the test equipment cannot indicate the phase angle, a separate phase-angle measuring instrument is necessary.

Prepare the IED for test before testing a particular function. Consider the logic diagram of the tested protection function when performing the test. All included functions in the IED are tested according to the corresponding test instructions in this chapter. The functions can be tested in any order according to user preferences and the test instructions are therefore presented in alphabetical order. Only the functions that are used (*Operation* is set to *On*) should be tested.

The response from a test can be viewed in different ways:

- Binary outputs signals
- Service values on the local HMI (logical signals or phasors)
- A PC with PCM600 application configuration software in debug mode

All setting groups that are used should be tested.

This IED is designed for a maximum continuous current of four times the rated current.

Please observe the measuring accuracy of the IED, the test equipment and the angular accuracy for both of them.

Please consider the configured logic from the function block to the output contacts when measuring the operate time.

13.2 Preparing for test

13.2.1 Preparing the IED to verify settings

If a test switch is included, start preparation by making the necessary connections to the test switch. This means connecting the test equipment according to a specific and designated IED terminal diagram.

Put the IED into test mode to facilitate the test of individual functions and prevent unwanted operation caused by other functions. The test switch should then be connected to the IED.

Verify that analog input signals from the analog input module are measured and recorded correctly by injecting currents and voltages required by the specific IED.

To make testing even more effective PCM600 should be used. PCM600 includes the Signal monitoring tool, which is useful to read of the individual currents and voltages, their amplitudes and phase angles. In addition PCM600 contains the

Disturbance handling tool. The content of reports generated by the Disturbance handling tool can be configured which makes the work more efficient. For example, the tool may be configured to only show time tagged events and to exclude analog information and so on.

The disturbance report settings must be checked to ensure that indications are correct.

Functions to test, signal and parameter names can be found in the technical reference manual. The correct initiation of the disturbance recorder is made on start and/or release or trip from a function. Also check that the wanted recordings of analogue (real and calculated) and binary signals are achieved.

Parameters can be entered into different setting groups. Make sure to test functions for the same parameter setting group. If needed the tests must be repeated for all different setting groups used. The difference between testing the first parameter setting group and the remaining is that there is no need for testing the connections.

Observe during testing that the right method for testing must be used that corresponds to the actual parameters set in the activated parameter setting group.

Set and configure the function(s) before the testing can start. Most functions are highly flexible and permit a choice of functional and tripping modes. The various modes are checked at the factory as part of the design verification. In certain cases only modes with a high probability of coming into operation need to be checked when commissioned to verify the configuration and settings.

13.2.2 Preparing the connection to the test equipment

The IED can be equipped with a test switch of type RTXP8, RTXP18 or RTXP24. The test switch and its associated test plug handle (RTXH8, RTXH18 or RTXH24) are a part of the COMBITEST system, which provides secure and convenient testing of the IED.

When using the COMBITEST, preparations for testing are automatically carried out in the proper sequence, that is for example, blocking of tripping circuits, short circuiting of CT’s, opening of voltage circuits, making IED terminals available for secondary injection). Terminals 1 and 8, 1 and 18 as well as 1 and 12 of the test switches RTXP8, RTXP18 and RTXP24 respectively are not disconnected as they supply DC power to the protection IED.

The RTXH test-plug handle leads may be connected to any type of test equipment or instrument. When a number of protection IEDs of the same type are tested, the test-plug handle only needs to be moved from the test switch of one protection IED to the test switch of the other, without altering previous connections.

Use COMBITEST test system to prevent unwanted tripping when the handle is withdrawn, since latches on the handle secure it in the half withdrawn position. In this position, all voltages and currents are restored and any reenergizing transients

are given a chance to decay before the trip circuits are restored. When the latches are released, the handle can be completely withdrawn from the test switch, restoring the trip circuits to the protection IED.

If a test switch is not used, take measures according to provided circuit diagrams.

Never disconnect the secondary connection of a current transformer circuit without short-circuiting the transformer's secondary winding. Operating a current transformer with the secondary winding open will cause a massive potential build up that may damage the transformer and injure humans.

13.2.3 Activating test mode

The IED shall be put into test mode before testing. Test mode blocks all functions in the IED and the individual functions to be tested can be unblocked to prevent unwanted operation caused by other functions. In this way, it is possible to test slower back-up measuring functions without the interference from faster measuring functions. Test mode is indicated when the yellow Start LED flashes.

Procedure

1. Browse to the **TestMode** menu and press *E*.
   The **TestMode** menu is found on the local HMI under **Main menu/Test/IED test mode/TestMode**
2. Use the up and down arrows to choose *On* and press *E*.
3. Press the left arrow to exit the menu.
   The dialog box *Save changes* appears.
4. Choose *Yes*, press *E* and exit the menu.
   The yellow startLED above the LCD will start flashing when the IED is in test mode.

13.2.4 Connecting test equipment to the IED

Connect the test equipment according to the IED specific connection diagram.

The current and voltage terminals must be connected. Pay attention to the current polarity. Make sure that the connection of input and output current terminals and the connection of the residual current conductor is correct. Check that the input and output logical signals in the logic diagram for the function under test are connected to the corresponding binary inputs and outputs of the IED under test.

To ensure correct results, make sure that the IED as well as the test equipment are properly grounded before testing.

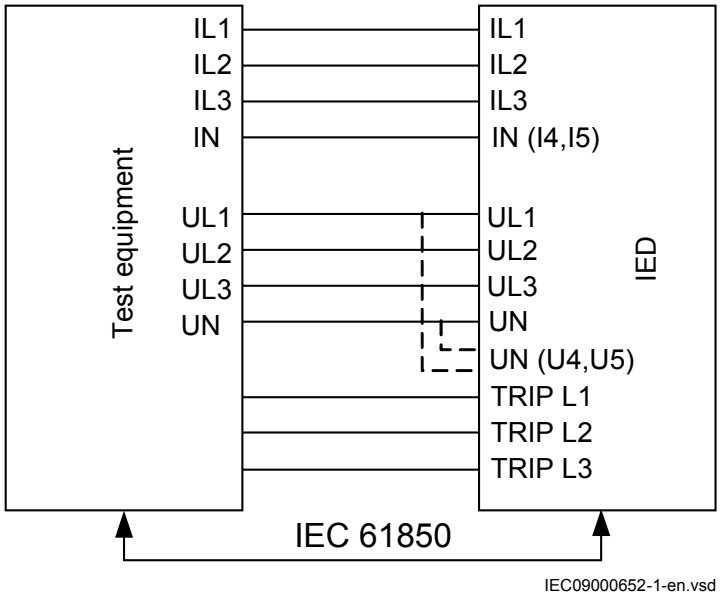

Figure 51: Connection example of the test equipment to the IED when test equipment is connected to the transformer input module

13.2.5 Verifying analog primary and secondary measurement

Verify that the connections are correct and that measuring and scaling is correctly. This is done by injecting current and voltage to the IED.

Apply input signals as needed according to the actual hardware and the application configuration made in PCM600.

1. Inject a symmetrical three-phase voltage and current at rated value.
2. Compare the injected value with the measured values.
   The voltage and current phasor menu in the local HMI is located under **Main menu/Measurements/Analog primary values** and **Main menu/ Measurements/Analog secondary values**.
3. Compare the frequency reading with the set frequency and the direction of the power.
   The frequency and active power are located under **Main menu/ Measurements/Monitoring/ServiceValues(MMXU)/SVRx**. Then navigate to the bottom of the list to find the frequency.
4. Inject an unsymmetrical three phase voltage and current, to verify that phases are correctly connected.

If some setting deviates check the analog input settings under

Main menu/Settings/General settings/Analog modules

13.2.6 Releasing the function to be tested

Release or unblock the function to be tested. This is done to ensure that only the function or the chain of functions to be tested are in operation and that other functions are prevented from operating. The user can release the tested function(s) by setting the corresponding *Blocked* parameter under Function test modes to *No* in the local HMI.

When testing a function in this blocking feature, remember that not only the actual function must be activated, but the whole sequence of interconnected functions (from measuring inputs to binary output contacts), including logic and so on. Before starting a new test mode session the user should scroll through every function to ensure that only the function to be tested (and the interconnected ones) have the parameters *Blocked* and eventually *EvDisable* are set to *No* and *Yes* respectively. Remember that a function is also blocked if the BLOCK input signal on the corresponding function block is active, which depends on the configuration. Ensure that the logical status of the BLOCK input signal is equal to 0 for the function to be tested. Event function blocks can also individually be blocked to ensure that no events are reported to a remote station during the test. This is done by setting the parameter *EvDisable* to *Yes*.

Any function is blocked if the corresponding setting in the local HMI under **Main menu/Test/Function test modes** menu remains *On*, that is the parameter *Blocked* is set to *Yes* and the parameter *TestMode* under **Main menu/Test/IED test mode** remains active. All functions that were blocked or released from a previous test mode session, that is the parameter *Test mode* is set to *On*, are reset when a new test mode session is started.

Procedure

1. Browse to the **Function test modes** menu.
   The Function test modes menu is located in the local HMI under **Main menu/Test/Function test modes**.
2. Browse to the function instance that should be released.
3. Set parameter *Blocked* for the selected function to *Yes*.

13.2.7 Disturbance report

13.2.7.1 Introduction

The following sub-functions are included in the disturbance report function:

- Disturbance recorder
- Event list
- Event recorder

- Fault locator
- Trip value recorder
- Indications

If the disturbance report is set on, then its sub-functions are also set up and so it is not possible to only switch these sub-functions off. The disturbance report function is switched off (parameter *Operation = Off*) in PCM600 or the local HMI under **Main menu/Settings/General settings/Monitoring/DisturanceReport/ DisturbanceReport(RDRE)**.

13.2.7.2 Disturbance report settings

When the IED is in test mode, the disturbance report can be made active or inactive. If the disturbance recorder is turned on during test mode, recordings will be made. When test mode is switched off all recordings made during the test session are cleared.

Setting *OpModeTest* for the control of the disturbance recorder during test mode are located on the local HMI under **Main menu/Settings/General settings/ Monitoring/DisturbanceReport/DisturbanceReport(RDRE)**.

13.2.7.3 Disturbance recorder (DR)

A *Manual Trig* can be started at any time. This results in a recording of the actual values from all recorded channels.

The *Manual Trig* can be initiated in two ways:

1. From the local HMI under **Main menu/Disturbance records**.
   1.1. Enter on the row at the bottom of the HMI called **Manual trig**. The newly performed manual trig will result in a new row.
   1.2. Navigate to **General information** or to **Trip values** to obtain more detailed information.
2. Open the Disturbance handling tool for the IED in the plant structure in PCM600.
   2.1. Right-click and select *Execute manual Trig* in the window *Available recordings in IED*.
   2.2. Read the required recordings from the IED.
   2.3. Refresh the window *Recordings* and select a recording.
   2.4. Right-click and select *Create Report* or *Open With* to export the recordings to any disturbance analyzing tool that can handle Comtrade formatted files.

Evaluation of the results from the disturbance recording function requires access to a PC either permanently connected to the IED or temporarily connected to the Ethernet port (RJ-45) on the front. The PCM600 software package must be installed in the PC.

Disturbance upload can be performed by the use of PCM600 or by any third party tool with IEC 61850 protocol. Reports can automatically be generated from PCM600. Disturbance files can be analyzed by any tool reading Comtrade formatted disturbance files.

13.2.7.4 Event recorder (ER) and Event list (EL)

The result from the event recorder and event list can be viewed on the local HMI or, after upload, in PCM600 as follows:

1. on the local HMI under **Main menu/Events**, or in more details via
2. the *Event Viewer* in PCM600.
   The internal FIFO register of all events will appear when the event viewer is launched.

When the IED is brought into normal service it is recommended to delete all events resulting from commissioning tests to avoid confusion in future fault analysis. All event in the IED can be cleared in the local HMI under **Main Menu//Reset/Reset internal event list** or **Main menu/Reset/Reset process event list**. It is not possible to clear the event lists from PCM600.

When testing binary inputs, the event list (EL) might be used instead. No uploading or analyzing of registrations is then needed since the event list keeps running, independent of start of disturbance registration.

13.2.8 Identifying the function to test in the technical reference manual

Use the technical reference manual (to identify function blocks, logic diagrams, input and output signals, setting parameters and technical data.

13.2.9 Exit test mode

The following procedure is used to return to normal operation.

Procedure

1. Navigate to the test mode folder.
2. Change the 'On' setting to 'Off'. Press the 'E' key and the left arrow key.
3. Answer 'YES', press the 'E' key and exit the menus.

13.3 Basic IED functions

13.3.1 Parameter setting group handling SETGRPS

Prepare the IED for verification of settings as outlined in section "Overview" and section "Preparing for test" in this chapter.

13.3.1.1 Verifying the settings

1. Check the configuration of binary inputs that control the selection of the active setting group.
2. Browse to the **ActiveGroup** menu to achieve information about the active setting group.
   The **ActiveGroup** menu is located on the local HMI under**Main menu/Test/Function status/Setting groups/ActiveGroup**
3. Connect the appropriate dc voltage to the corresponding binary input of the IED and observe the information presented on the local HMI.
   The displayed information must always correspond to the activated input.
4. Check that the corresponding output indicates the active group.
   Operating procedures for the PC aided methods of changing the active setting groups are described in the corresponding PCM600 documents and instructions for the operators within the SCS are included in the SCS documentation.

13.3.1.2 Completing the test

Continue to test another function or end the test by changing the *Test mode* setting to *Off*. Restore connections and settings to their original values, if they were changed for testing purposes.

13.4 Differential protection

13.4.1 High impedance differential protection HZPDIF

Prepare the IED for verification of settings as outlined in section "Overview" and section "Preparing for test" in this chapter.

13.4.1.1 Verifying the settings

1. Connect single-phase or three-phase test set to inject the operating voltage.
   The injection shall be on the primary side of the stabilizing resistor.

As the operating voltage is adjusted on the stabilizing resistor and with the setting of the resistor value in the function this is essential for the measurement of the expected value. Normally a slightly higher operating value is no problem as the sensitivity is not influenced much.

2. Connect the trip contact to the test set to stop the test set for measurement of trip times below.
3. Increase the voltage and make note of the operate value *U>Trip*. This is done with manual test and without trip of the test set.
4. Reduce the voltage slowly and make note of the reset value. The reset value must be high for this function.
5. Check the operating time by injecting a voltage corresponding to 1.2 · *U>Trip* level. Make note of the measured trip time.
6. If required, verify the trip time at another voltage. Normally 2 · *U>Trip* is selected.
7. If used, measure the alarm level operating value. Increase the voltage and make note of the operate value *U>Alarm*. This is done with manual test and without trip of the test set.
8. Measure the operating time on the alarm output by connecting the stop of the test set to an output from *tAlarm*. Inject a voltage 1.2 · *U>Alarm* and measure the alarm time.
9. Check that trip and alarm outputs operate accordingly to the configuration logic.
10. Finally check that start and alarm information is stored in the event menu and if a serial connection to the SA is available verify that the correct and only the required signals are presented on the local HMI and on the SCADA system.

Information on how to use the event menu is found in the operator's manual.

13.4.1.2 Completing the test

Continue to test another function or end the test by changing the *Test mode* setting to *Off*. Restore connections and settings to their original values, if they were changed for testing purposes.

13.5 Current protection

13.5.1 Instantaneous phase overcurrent protection PHPIOC

Prepare the IED for verification of settings as outlined in section "Overview" and section "Preparing for test" in this chapter.

To verify the settings the following fault type should be tested:

- Phase-to-earth fault

Ensure that the maximum continuous current, supplied from the current source used for the test of the IED, does not exceed four times the rated current value of the IED.

13.5.1.1 Measuring the operate limit of set values

1. Inject a phase current into the IED with an initial value below that of the setting.
2. Set the operation mode to *1 out of 3*.
3. Increase the injected current in the Ln phase until the TRL (n=1–3) signal appears.
4. Switch the fault current off.

Observe: Do not exceed the maximum permitted overloading of the current circuits in the IED.

5. Compare the measured operating current with the set value.
6. Set the operation mode to *2 out of 3* and inject current into one of the phases. Check - no operation.

13.5.1.2 Completing the test

Continue to test another function or end the test by changing the *Test mode* setting to *Off*. Restore connections and settings to their original values, if they were changed for testing purposes.

13.5.2 Four step phase overcurrent protection OC4PTOC

Prepare the IED for verification of settings outlined in section "Overview" and section "Preparing for test" in this chapter.

13.5.2.1 Verifying the settings

1. Connect the test set for appropriate current injection to the appropriate IED phases.
   If there is any configuration logic that is used to enable or block any of the four available overcurrent steps, make sure that the step under test is enabled, for example end fault protection.
   If *1 out of 3* currents for operation is chosen: Connect the injection current to phases L1 and neutral.
   If *2 out of 3* currents for operation is chosen: Connect the injection current into phase L1 and out from phase L2.

If *3 out of 3* currents for operation is chosen: Connect the symmetrical three-phase injection current into phases L1, L2 and L3.

2. Connect the test set for the appropriate three-phase voltage injection to the IED phases L1, L2 and L3. The protection shall be fed with a symmetrical three-phase voltage.
3. Set the injected polarizing voltage slightly larger than the set minimum polarizing voltage (default is 5% of *UBase*) and set the injection current to lag the appropriate voltage by an angle of about 80° if forward directional function is selected.
   If *1 out of 3* currents for operation is chosen: The voltage angle of phase L1 is the reference.
   If *2 out of 3* currents for operation is chosen: The voltage angle of phase L1 – the voltage angle of L2 is the reference.
   If *3 out of 3* currents for operation is chosen: The voltage angle of phase L1 is the reference.
   If reverse directional function is selected, set the injection current to lag the polarizing voltage by an angle equal to 260° (equal to 80° + 180°).
4. Increase the injected current and note the operated value of the tested step of the function.
5. Decrease the current slowly and note the reset value.
6. If the test has been performed by injection of current in phase L1, repeat the test when injecting current into phases L2 and L3 with polarizing voltage connected to phases L2 respectively L3 (*1 out of 3* currents for operation).
7. If the test has been performed by injection of current in phases L1 – L2, repeat the test when injecting current into phases L2 – L3 and L3 – L1 with appropriate phase angle of injected currents.
8. Block higher set stages when testing lower set stages according to below.
9. Connect a trip output contact to a timer.
10. Set the injected current to 200% of the operate level of the tested stage, switch on the current and check the time delay.
    For inverse time curves, check the operate time at a current equal to 110% of the operate current for *txMin*.
11. Check that all trip and start contacts operate according to the configuration (signal matrixes)
12. Reverse the direction of the injected current and check that the protection does not operate.
13. If *2 out of 3* or *3 out of 3* currents for operation is chosen: Check that the function will not operate with current in one phase only.
14. Repeat the above described tests for the higher set stages.
15. Finally check that start and trip information is stored in the event menu.

Check of the non-directional phase overcurrent function. This is done in principle as instructed above, without applying any polarizing voltage.

13.5.2.2 Completing the test

Continue to test another function or end the test by changing the *Test mode* setting to *Off*. Restore connections and settings to their original values, if they were changed for testing purposes.

13.5.3 Instantaneous residual overcurrent protection EFPIOC

Prepare the IED for verification of settings as outlined in section "Overview" and section "Preparing for test" in this chapter.

To verify the settings the following fault type should be tested:

- Phase-to-earth fault

Ensure that the maximum continuous current, supplied from the current source used for the test of the IED, does not exceed four times the rated current value of the IED.

13.5.3.1 Measuring the operate limit of set values

1. Inject a phase current into the IED with an initial value below that of the setting.
2. Increase the injected current in the Ln or in the neutral (summated current input) phase until the TRIP signal appears.
3. Switch the fault current off.
   Observe to not exceed the maximum permitted overloading of the current circuits in the IED
4. Compare the measured operating current with the set value.

13.5.3.2 Completing the test

Continue to test another function or end the test by changing the *Test mode* setting to *Off*. Restore connections and settings to their original values, if they were changed for testing purposes.

13.5.4 Four step residual overcurrent protection EF4PTOC

Prepare the IED for verification of settings as outlined in section "Overview" and section "Preparing for test" in this chapter.

13.5.4.1 Four step directional overcurrent protection

1. Connect the test set for single current injection to the appropriate IED terminals.

Connect the injection current to terminals L1 and neutral, or to terminals N and neutral.

2. Set the injected polarizing voltage slightly larger than the set minimum polarizing voltage (default 5% of Ur) and set the injection current to lag the voltage by an angle equal to the set reference characteristic angle (*AngleRCA*) if the forward directional function is selected.
   If reverse directional function is selected, set the injection current to lag the polarizing voltage by an angle equal to RCA+ 180°.
3. Increase the injected current and note the value at which the studied step of the function operates.
4. Decrease the current slowly and note the reset value.
5. If the test has been performed by injection of current in phase L1, repeat the test when injecting current into terminals L2 and L3 with a polarizing voltage connected to terminals L2 respectively L3.
6. Block lower set steps when testing higher set steps according to the instructions that follow.
7. Connect a trip output contact to a timer.
8. Set the injected current to 200% of the operate level of the tested step, switch on the current and check the time delay.
   For inverse time curves, check the operate time at a current equal to 110% of the operate current for *txMin*.
9. Check that all trip and start contacts operate according to the configuration (signal matrixes)
10. Reverse the direction of the injected current and check that the step does not operate.
11. Check that the protection does not operate when the polarizing voltage is zero.
12. Repeat the above described tests for the higher set steps.
13. Finally, check that start and trip information is stored in the event menu.

13.5.4.2 Four step non-directional overcurrent protection

1. Do as described in "Four step directional overcurrent protection", but without applying any polarizing voltage.

13.5.4.3 Completing the test

Continue to test another function or end the test by changing the *Test mode* setting to *Off*. Restore connections and settings to their original values, if they were changed for testing purposes.

13.5.5 Sensitive directional residual overcurrent and power protection SDEPSDE

Prepare the IED for verification of settings as outlined in section "Overview" and section "Preparing for test" in this chapter

Figure 52 shows the principal connection of the test set during the test of the sensitive directional residual overcurrent protection. Observe that the polarizing voltage is equal to $-3U_0$.

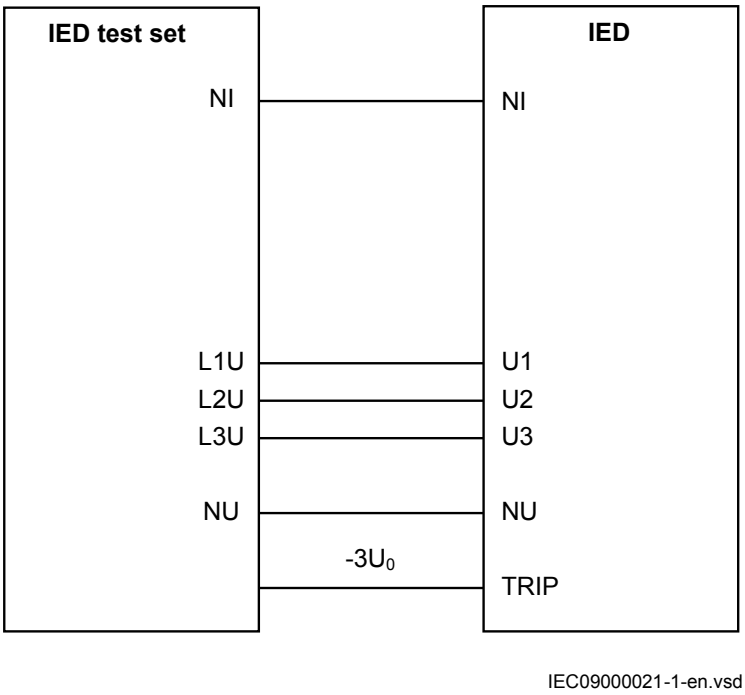

Figure 52: Principle connection of the test set

Values of the logical signals belonging to the sensitive directional residual overcurrent protection are available on the local HMI under **Main menu/Test/ Function status/Current protection/SensDirResOvCurr(PSDE,67N)/SDEx**

13.5.5.1 Measuring the operate and time limit for set values

Operation mode $3I_0 \cdot \cos\varphi$

Procedure

1. Set the polarizing voltage to 1.2 · *UNRel>* and the phase angle between voltage and current to the set characteristic angle (*RCADir*), the current lagging the voltage.
   Take setting *RCAComp* into consideration if not equal to *0*.
2. Measure that the operate current of the set directional element is equal to the *INcosPhi>* setting.
   The I Dir (I_0 cos(Angle)) function activates the START and STDIRIN output.
3. Measure with angles φ = RCADir +/- 45° that the measuring element operates when I_0 cos (*RCADir* - φ) = I_0cos(+/-45) = *INcosPhi>*.
4. Compare the result with the set value.
   Take the set characteristic into consideration, see figure 53 and figure 54.

5. Measure the operate time of the timer by injecting a current two times the set *INcosPhi>* value and the polarizing voltage 1.2 · *UNRel>*.

$$Tinv = kSN \cdot Sref / 3I_{0test} \cdot \cos(\varphi)$$

(Equation 1)

6. Compare the result with the expected value.
   The expected value depends on whether definite or inverse time was selected.
7. Set the polarizing voltage to zero and increase until the boolean output signal UNREL is activated, which is visible in the Application Configuration in PCM600 when the IED is in online mode. Compare the voltage with the set value *UNRel>*.
8. Continue to test another function or complete the test by setting the test mode to *Off*.

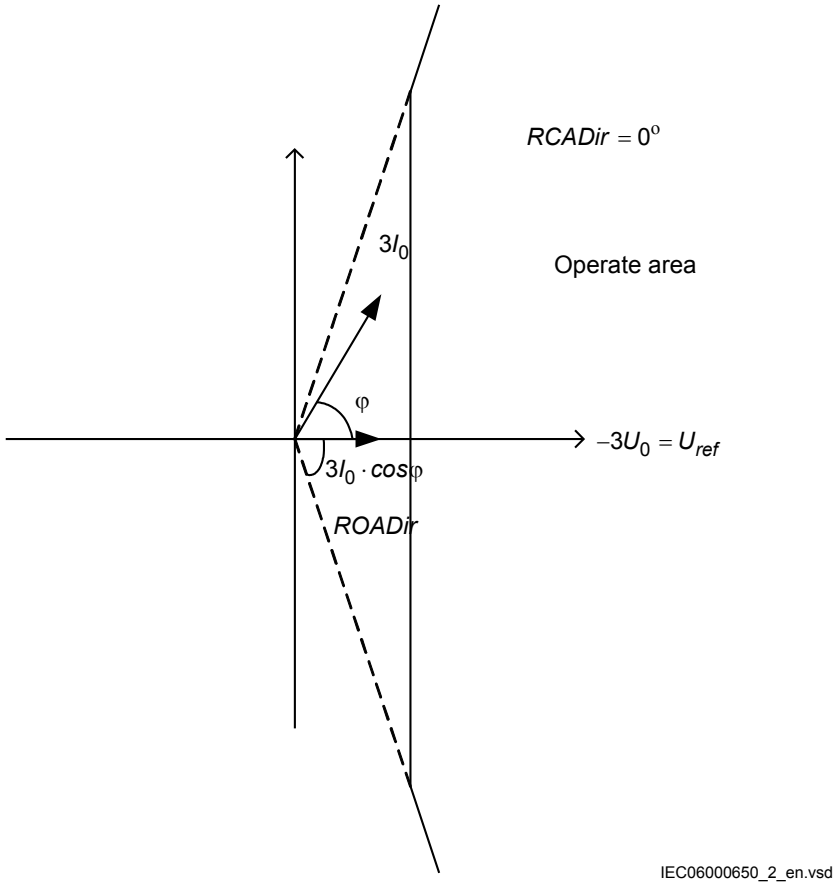

Figure 53: Characteristic with ROADir restriction

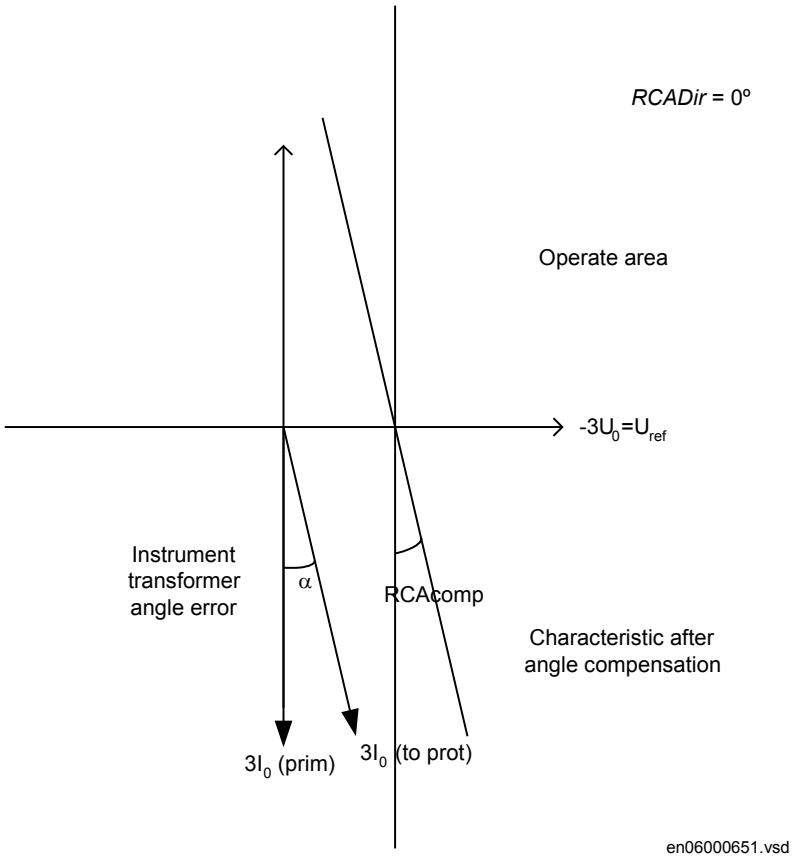

Figure 54: Explanation of RCAcomp

Operation mode $3I_0 \cdot 3U_0 \cdot \cos\varphi$

Procedure

1. Set the polarizing voltage to 1.2 · *UNRel>* and the phase angle between voltage and current to the set characteristic angle (*RCADir*), the current lagging the voltage.
2. Measure that the operate power is equal to the *SN>* setting for the set directional element.
   Note that for operation, both the injected current and voltage must be greater than the set values *INRel>* and *UNRel>* respectively.
   The function activates the START and STDIRIN outputs.
3. Measure with angles φ = *RCADir* +/- 45° that the measuring element operates when $3I_0 \cdot 3U_0 \cdot \cos$ (*RCADir* - φ) = 3I0 · 3U0 · cos(+/-45) = *SN>*.
4. Compare the result with the set value. Take the set characteristic into consideration, see figure 53 and figure 54.
5. Measure the operate time of the timer by injecting 1.2 · *UNRel>* and a current to get two times the set *SN>* operate value.

$$Tinv = kSN \cdot Sref \,/\, 3I_{0test} \cdot 3U_{0test} \cdot \cos(\varphi)$$

(Equation 2)

6. Compare the result with the expected value.
   The expected value depends on whether definite or inverse time was selected.
7. Continue to test another function or complete the test by setting the test mode to *Off*.

Operation mode $3I_0$ and fi

Procedure

1. Set the polarizing voltage to 1.2 · *UNRel>* and the phase angle between voltage and current to the set characteristic angle (*RCADir*), the current lagging the voltage.
2. Measure that the operate power is equal to the *INDir>* setting for the set directional element.

   Note that for operation, both the injected current and voltage must be greater than the set values *INRel>* and *UNRel>* respectively.

   The function activates the START and STDIRIN output.
3. Measure with angles φ around *RCADir +/- ROADir*.
4. Compare the result with the set values, refer to figure 55 for example characteristic.
5. Measure the operate time of the timer by injecting a current to get two times the set *SN>* operate value.

$$Tinv = kSN\ Sref \,/\, 3I_{0test} \cdot 3U_{0test} \cos(\varphi)$$

(Equation 3)

6. Compare the result with the expected value.
   The expected value depends on whether definite or inverse time was selected.
7. Continue to test another function or complete the test by setting the test mode to *Off*.

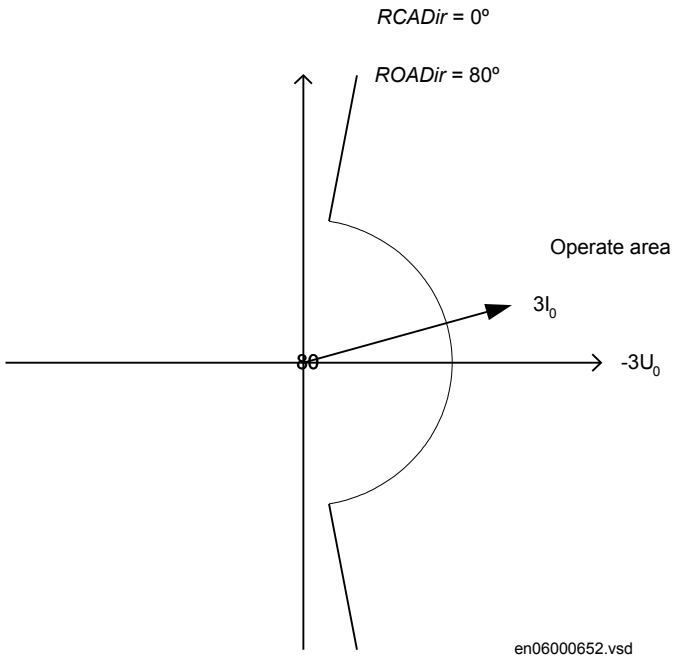

Figure 55: Example characteristic

Non-directional earth fault current protection

Procedure

1. Measure that the operate current is equal to the *INNonDir>* setting.
   The function activates the START and STDIRIN output.
2. Measure the operate time of the timer by injecting a current to get two times the set *INNonDir>* operate value.
3. Compare the result with the expected value.
   The expected value depends on whether definite time *tINNonDir* or inverse time was selected.
4. Continue to test another function or complete the test by setting the test mode to *Off*.

Residual overvoltage release and protection

Procedure

1. Measure that the operate voltage is equal to the *UN>* setting.
   The function activates the START and STUN signals.
2. Measure the operate time by injecting a voltage 1.2 timers set *UN>* operate value.
3. Compare the result with the set *tUN* operate value.
4. Inject a voltage 0.8 · *UNRel>* and a current high enough to operate the directional function at the chosen angle.
5. Increase the voltage until the directional function is released.
6. Compare the measured value with the set *UNRel>* operate value.

13.5.5.2 Completing the test

Continue to test another function or end the test by changing the *Test mode* setting to *Off*. Restore connections and settings to their original values, if they were changed for testing purposes.

13.5.6 Thermal overload protection, one time constant LPTTR

Prepare the IED for verification of settings as outlined in section "Overview" and section "Preparing for test" in this chapter.

Check that the input logical signal BLOCK is logical zero and that on the local HMI, the logical signal TRIP, START and ALARM are equal to logical zero.

13.5.6.1 Measuring the operate and time limit of set values

Testing the protection without external temperature compensation (NonComp)

1. Quickly set the measured current (fault current) in one phase to about 300% of *IRef* (to minimise the trip time), and switch the current off.
2. Reset the thermal memory on the local HMI under **Main menu/Reset/Reset temperature/ThermalOverload1TimeConst(PTTR,26)/THLx**
3. Switch the fault current on and take note of the temperature, available on the local HMI under**Main menu/Test/Function status/Current protection/ ThermOverLoad1TimeConst(PTTR,26)/THL/TEMP**
4. Check the time until the alarm limit has reached the *AlarmTemp* level during injection.
   Monitor the signal ALARM until it appears on the corresponding binary output or on the local HMI.
5. Compare the measured temperature with the setting.
6. Measure the LPTTR protection trip time.
   Use the TRIP signal from the configured binary output to stop the timer.
7. Take the TEMP readings.
   Compare with the setting of *TripTemp*.
8. Activate the BLOCK binary input.
   The signals ALARM, START and TRIP should disappear.
9. Reset the BLOCK binary input.
10. Check the reset limit (TdReset).
    Monitor the signal START until it disappears on the corresponding binary output or on the local HMI, take the TEMP readings and compare with the setting of *ReclTemp*.
11. Compare the measured trip time with the setting according to the formula.
12. Reset the thermal memory.
13. Continue to test another function or end the test by changing the test mode setting to *Off*.

13.5.6.2 Completing the test

Continue to test another function or end the test by changing the *Test mode* setting to *Off*. Restore connections and settings to their original values, if they were changed for testing purposes.

13.5.7 Thermal overload protection, two time constants TRPTTR

Prepare the IED for verification of settings as outlined in section "Overview" and section "Preparing for test" in this chapter.

13.5.7.1 Checking operate and reset values

Procedure

1. Connect symmetrical three-phase currents to the appropriate current terminals of the IED.
2. Set the Time constant 1 (*Tau1*) and Time Constant 2 (*Tau2*) temporarily to 1 minute.
3. Set the three-phase injection currents slightly lower than the set operate value of stage *IBase1*, increase the current in phase L1 until stage *IBase1* operates and note the operate value.

   Observe the maximum permitted overloading of the current circuits in the IED.

4. Decrease the current slowly and note the reset value.
   Check in the same way as the operate and reset values of *IBase1* for phases L2 and L3.
5. Activate the digital input for cooling input signal to switch over to base current *IBase2*.
6. Check for all three phases the operate and reset values for *IBase2*in the same way as described above for stage *IBase1*
7. Deactivate the digital input signal for stage *IBase2*.
8. Set the time constant for *IBase1* in accordance with the setting plan.
9. Set the injection current for phase L1 to 1.50 · *IBase1*.
10. Connect a trip output contact to the timer and monitor the output of contacts ALARM1 and ALARM2 to digital inputs in test equipment.
    Read the heat content in the thermal protection from the local HMI and wait until the content is zero.
11. Switch on the injection current and check that ALARM1 and ALARM2 contacts operate at the set percentage level and that the operate time for tripping is in accordance with the set Time Constant 1 (*Tau1*).
    With setting Itr = 101%*IBase1* and injection current 1.50 · *IBase1*, the trip time from zero content in the memory shall be 0.60 · Time Constant 1 (*Tau1*).

12. Check that all trip and alarm contacts operate according to the configuration logic.
13. Switch off the injection current and check from the service menu readings of thermal status and LOCKOUT that the lockout resets at the set percentage of heat content.
14. Activate the digital input for cooling input signal to switch over to base current *IBase2*.
    Wait 5 minutes to empty the thermal memory and set Time Constant 2 (*Tau2*) in accordance with the setting plan.
15. Test with injection current 1.50 · *IBase2* the thermal alarm level, the operate time for tripping and the lockout reset in the same way as described for stage *IBase1*.
16. Finally check that start and trip information is stored in the event menu.

13.5.7.2 Completing the test

Continue to test another function or end the test by changing the *Test mode* setting to *Off*. Restore connections and settings to their original values, if they were changed for testing purposes.

13.5.8 Breaker failure protection CCRBRF

Prepare the IED for verification of settings as outlined in section "Overview" and section "Preparing for test" in this chapter.

The breaker failure protection function CCRBRF should normally be tested in conjunction with some other function that provides a start signal. An external START signal can also be used.

To verify the settings in the most common back-up trip mode *1 out of 3*, it is sufficient to test phase-to-earth faults.

At mode *2 out of 4* the phase current setting, *IP*> can be checked by single-phase injection where the return current is connected to the summated current input. The value of residual (earth fault) current IN set lower than *IP*> is easiest checked in back-up trip mode *1 out of 4*.

13.5.8.1 Checking the phase current operate value, *IP>*

The check of the *IP*> current level is best made in *FunctionMode* = *Current* and *BuTripMode* = *1 out of 3* or *2 out of 4*.

1. Apply the fault condition, including START of CCRBRF, with a current below set *IP*>.
2. Repeat the fault condition and increase the current in steps until a trip occurs.
3. Compare the result with the set *IP*>.
4. Disconnect AC and START input signals.

Note! If *NoI>check* or *Retrip off* is set, only back-up trip can be used to check set *IP>*.

13.5.8.2 Checking the residual (earth fault) current operate value *IN>* set below *IP>*

Check the low set *IN>* current where setting *FunctionMode = Current* and setting *BuTripMode = 1 out of 4*

1. Apply the fault condition, including START of CCRBRF, with a current just below set *IN>Pickup_N*.
2. Repeat the fault condition and increase the current in steps until trip appears.
3. Compare the result with the set *IN>*.
4. Disconnect AC and START input signals.

13.5.8.3 Checking the re-trip and back-up times

The check of the set times can be made in connection with the check of operate values above.

Choose the applicable function and trip mode, such as *FunctionMode = Current* and *RetripMode = I> check*.

1. Apply the fault condition, including start of CCRBRF, well above the set current value. Measure time from START of CCRBRF.
2. Check the re-trip *t1* and back-up trip times *t2* and *t3*.
   In applicable cases, the back-up trip for multi-phase start *t2MPh* and back-up trip 2, *t2* and *t3* can also be checked. To check *t2MPh*, a two-phase or three-phase start shall be applied.
3. Disconnect AC and START input signals.

13.5.8.4 Verifying the re-trip mode

Choose the mode below, which corresponds to the actual case.

In the cases below it is assumed that *FunctionMode = Current* is selected.

Checking the case without re-trip, *RetripMode = Retrip Off*

1. Set *RetripMode = Retrip Off*.
2. Apply the fault condition, including start of CCRBRF, well above the set current value.
3. Verify that no re-trip, but back-up trip is achieved after set time.
4. Disconnect AC and START input signals.

Checking the re-trip with current check, *RetripMode = CB Pos Check*

1. Set *RetripMode = CB Pos Check*.
2. Apply the fault condition, including start of CCRBRF, well above the set current value.
3. Verify that re-trip is achieved after set time *t1* and back-up trip after time *t2*
4. Apply the fault condition, including start of CCRBRF, with current below set current value.
5. Verify that no re-trip, and no back-up trip is obtained.
6. Disconnect AC and START input signals.

Checking re-trip without current check, *RetripMode = No CBPos Check*

1. Set *RetripMode = No CBPos Check*.
2. Apply the fault condition, including start of CCRBRF, well above the set current value.
3. Verify that re-trip is achieved after set time *t1*, and back-up trip after time *t2*.
4. Apply the fault condition, including start of CCRBRF, with current below set current value.
5. Verify that re-trip is achieved after set time *t1*, but no back-up trip is obtained.
6. Disconnect AC and START input signals.

13.5.8.5 Verifying the back-up trip mode

In the cases below it is assumed that *FunctionMode = Current* is selected.

Checking that back-up tripping is not achieved at normal CB tripping

Use the actual tripping modes. The case below applies to re-trip with current check.

1. Apply the fault condition, including start of CCRBRF, with phase current well above set value *IP*.
2. Arrange switching the current off, with a margin before back-up trip time, *t2*. It may be made at issue of re-trip command.
3. Check that re-trip is achieved, if selected, but no back-up trip.
4. Disconnect AC and START input signals.

The normal mode *BuTripMode = 1 out of 3* should have been verified in the tests above. In applicable cases the modes *1 out of 4* and *2 out of 4* can be checked. Choose the mode below, which corresponds to the actual case.

Checking the case *BuTripMode = 1 out of 4*

It is assumed that the earth-fault current setting *IN>* is below phase current setting *IP>*.

1. Set *BuTripMode = 1 out of 4*.
2. Apply the fault condition, including start of CCRBRF, with one-phase current below set *IP*> but above *IN*>. The residual earth fault should then be above set *IN*>.
3. Verify that back-up trip is achieved after set time. If selected, re-trip should also appear.
4. Disconnect AC and START input signals.

Checking the case *BuTripMode = 2 out of 4*

The earth-fault current setting *IN*> may be equal to or below phase-current setting *IP*>.

1. Set *BuTripMode = 2 out of 4*.
2. Apply the fault condition, including start of CCRBRF, with one-phase current above set *IP*> and residual (earth fault) above set *IN*>. It can be obtained by applying a single-phase current.
3. Verify that back-up trip is achieved after set time. If selected, re-trip should also appear.
4. Apply the fault condition, including start of CCRBRF, with at least one-phase current below set *IP*> and residual (earth fault) above set *IN*>. The current may be arranged by feeding three- (or two-) phase currents with equal phase angle (I0-component) below *IP*>, but of such value that the residual (earth fault) current ($3I_0$) will be above set value *IN*>.
5. Verify that back-up trip is not achieved.
6. Disconnect AC and START input signals.

13.5.8.6 Verifying instantaneous back-up trip at CB faulty condition

Applies in a case where a signal from CB supervision function regarding CB being faulty and unable to trip is connected to input CBFLT.

1. Repeat the check of back-up trip time. Disconnect current and START input signals.
2. Activate the input CBFLT. The output CBALARM (CB faulty alarm) should appear after set time *tCBAlarm*. Keep the input activated.
3. Apply the fault condition, including start of CCRBRF, with current above set current value.
4. Verify that back-up trip is obtained without intentional delay, for example within 20ms from application of start.
5. Disconnect injected AC and STARTinput signals.

13.5.8.7 Verifying the case *RetripMode = Contact*

It is assumed that re-trip without current check is selected, *RetripMode = Contact*.

1. Set *FunctionMode = Contact*
2. Apply input signal for CB closed to relevant input or inputs CBCLDL1 (2 or 3)
3. Apply input signal, or signals for start of CCRBRF. The value of current could be low.
4. Verify that re-trip and back-up trip are achieved after set times.
5. Disconnect the start signal(s). Keep the CB closed signal(s).
6. Apply input signal(s), for start of CCRBRF. The value of current could be low.
7. Arrange disconnection of CB closed signal(s) well before set back-up trip time *t2*.
8. Verify that back-up trip is not achieved.
9. Disconnect injected AC and START input signals.

13.5.8.8 Verifying the function mode *Current&Contact*

To be made only when *FunctionMode = Current&Contact* is selected. It is suggested to make the tests in one phase only, or at three-phase trip applications for just three-phase tripping.

Checking the case with fault current above set value *IP>*

The operation shall be as in *FunctionMode = Current*.

1. Set *FunctionMode = Current&Contact*.
2. Leave the inputs for CB close inactivated. These signals should not influence.
3. Apply the fault condition, including start of CCRBRF, with current above the set *IP>* value.
4. Check that the re-trip, if selected, and back-up trip commands are achieved.
5. Disconnect injected AC and START input signals.

Checking the case with fault current below set value *I>BlkCont*

The case shall simulate a case where the fault current is very low and operation will depend on CB position signal from CB auxiliary contact. It is suggested that re-trip without current check is used, setting *RetripMode = No CBPos Check*.

1. Set *FunctionMode = Current&Contact*.
2. Apply input signal for CB closed to relevant input or inputs CBCLDL1 (2 or 3)
3. Apply the fault condition with input signal(s) for start of CCRBRF. The value of current should be below the set value *I>BlkCont*
4. Verify that re-trip (if selected) and back-up trip are achieved after set times. Failure to trip is simulated by keeping the signal(s) CB closed activated.
5. Disconnect the AC and the START signal(s). Keep the CB closed signal(s).
6. Apply the fault and the start again. The value of current should be below the set value *I>BlkCont*.
7. Arrange disconnection of BC closed signal(s) well before set back-up trip time *t2*. It simulates a correct CB tripping.
8. Verify that back-up trip is not achieved. Re-trip can appear for example, due to selection “Re-trip without current check”.
9. Disconnect injected AC and START input signals.

13.5.8.9 Completing the test

Continue to test another function or end the test by changing the *Test mode* setting to *Off*. Restore connections and settings to their original values, if they were changed for testing purposes.

13.5.9 Stub protection STBPTOC

Prepare the IED for verification of settings as outlined in section "Overview" and section "Preparing for test" in this chapter.

Logical signals for STBPTOC protection are available on the local HMI under**Main menu/Settings/Setting group N/Current protection/Stub(PTOC, 50STB)/STBx**

13.5.9.1 Measuring the operate limit of set values

Procedure

1. Check that the input logical signals BLOCK and RELEASE and the output logical signal TRIP are all logical zero.
2. Activate the input RELEASE on the STBPTOC function block
3. For a short while inject a current (fault current) in one phase to about 110% of the set operating current, and switch the current off.
   Observe to not exceed the maximum permitted overloading of the current circuits in the IED.
4. Switch the fault current on and measure the operating time of STBPTOC.
   Use the TRIP signal from the configured binary output to stop the timer. The operation should be instantaneously.
5. Activate the input BLOCK on the STBPTOC function block.
6. Switch on the fault current (110% of the setting).
   No TRIP signal should appear.
7. Switch off the fault current.
8. For a short while inject a current (fault current) in same phase to about 90% of the set operating current, and switch the current off.
9. Switch the fault current on.
   No TRIP signal should appear.
10. Switch the fault current off.
11. Reset the RELEASE binary input.
12. Switch the fault current on.
    No TRIP signal should appear.
13. Switch the fault current off.

13.5.9.2 Completing the test

Continue to test another function or end the test by changing the *Test mode* setting to *Off*. Restore connections and settings to their original values, if they were changed for testing purposes.

13.5.10 Pole discordance protection CCRPLD

Prepare the IED for verification of settings as outlined in section "Preparing for test" and section "Preparing for test" in this chapter.

13.5.10.1 Verifying the settings

1. External detection logic, Contact function *selection* = *ContSel* setting equals CCRPLD signal from CB. Activate the EXTPDIND binary input, and measure the operating time of CCRPLD.
   Use the TRIP signal from the configured binary output to stop the timer.
2. Compare the measured time with the set value *tTrip*.
3. Reset the EXTPDIND input.
4. Activate the BLKDBYAR binary input.
   This test should be performed together with Autorecloser SMBRREC.
5. Activate the EXTPDIND binary input.
   No TRIP signal should appear.
6. Reset both BLKDBYAR and EXTPDIND binary inputs.
7. Activate the BLOCK binary input.
8. Activate EXTPDIND binary input.
   NO TRIP signal should appear.
9. Reset both BLOCK and EXTPDIND binary inputs.
10. If Internal detection logic Contact function *selection* = *ContSel* setting equals Pole position from auxiliary contacts. Then set inputs POLE1OPN...POLE3CL in a status that activates the pole discordance logic and repeats step 2 to step 6.
11. Unsymmetrical current detection with CB monitoring: Set measured current in one phase to 110% of current release level. Activate CLOSECMD and measure the operating time of the CCRPLD protection.
    Use the TRIP signal from the configured binary out put stop the timer.
12. 12. Deactivate the CLOSECMD: Set measured current in one phase to 90% of Current Release level. Activate CLOSECMD.
    NO TRIP signal should appear.
13. 13. Repeat step 14 and 15 using OPENCMD instead of CLOSECMD.
    Asymmetry current detection with CB monitoring: Set all three currents to 110% of Current Release level. Activate CLOSECMD.
    NO TRIP signal should appear due to symmetrical condition.
14. 14. Deactivate the CLOSECMD. Decrease one current with 120% of the current unsymmetrical level compared to the other two phases. Activate CLOSECMD and measure the operating time of the CCRPLD protection.

Use the TRIP signal from the configured binary out put stop the timer.

15. 15. Deactivate the CLOSECMD. Decrease one current with 80% of the current unsymmetrical level compared to the other two phases. Activate CLOSECMD.
    NO TRIP signal should appear.

13.5.10.2 Completing the test

Continue to test another function or end the test by changing the *Test mode* setting to *Off*. Restore connections and settings to their original values, if they were changed for testing purposes.

13.5.11 Directional underpower protection GUPPDUP

Prepare the IED for verification of settings as outlined in section "Overview" and section "Preparing for test" in this chapter.

13.5.11.1 Verifying the settings

The underpower protection shall be set to values according to the real set values to be used.

The test is made by means of injection of voltage and current where the amplitude of both current and voltage and the phase angle between the voltage and current can be controlled. During the test the analog outputs of active and reactive power shall be monitored.

Procedure

1. Connect the test set for injection of voltage and current corresponding to the mode to be used in the application. If a three-phase test set is available this could be used for all the modes. If a single-phase current/voltage test set is available the test set should be connected to a selected input for one-phase current and voltage.

Set value: *Mode*	Formula used for complex power calculation
L1, L2, L3	$\bar{S} = \bar{U}_{L1} \cdot \bar{I}_{L1}^{*} + \bar{U}_{L2} \cdot \bar{I}_{L2}^{*} + \bar{U}_{L3} \cdot \bar{I}_{L3}^{*}$ (Equation 4) $\bar{S} = \bar{V}_{A} \cdot \bar{I}_{A}^{*} + \bar{V}_{B} \cdot \bar{I}_{B}^{*} + \bar{V}_{C} \cdot \bar{I}_{C}^{*}$ (Equation 4)
Arone	$\bar{S} = \bar{U}_{L1L2} \cdot \bar{I}_{L1}^{*} - \bar{U}_{L2L3} \cdot \bar{I}_{L3}^{*}$ (Equation 5)
PosSeq	$\bar{S} = 3 \cdot \bar{U}_{PosSeq} \cdot \bar{I}_{PosSeq}^{*}$ (Equation 6)
L1L2	$\bar{S} = \bar{U}_{L1L2} \cdot (\bar{I}_{L1}^{*} - \bar{I}_{L2}^{*})$ (Equation 7)
L2L3	$\bar{S} = \bar{U}_{L2L3} \cdot (\bar{I}_{L2}^{*} - \bar{I}_{L3}^{*})$ (Equation 8)
L3L1	$\bar{S} = \bar{U}_{L3L1} \cdot (\bar{I}_{L3}^{*} - \bar{I}_{L1}^{*})$ (Equation 9)
L1	$\bar{S} = 3 \cdot \bar{U}_{L1} \cdot \bar{I}_{L1}^{*}$ (Equation 10)
L2	$\bar{S} = 3 \cdot \bar{U}_{L2} \cdot \bar{I}_{L2}^{*}$ (Equation 11)
L3	$\bar{S} = 3 \cdot \bar{U}_{L3} \cdot \bar{I}_{L3}^{*}$ (Equation 12)

2. Adjust the injected current and voltage to the set values in % of *IBase* and *UBase* (converted to secondary current and voltage). The angle between the injected current and voltage shall be set equal to the set direction *Angle1*, angle for stage 1 (equal to 0° for low forward power protection and equal to 180° for reverse power protection). Check that the monitored active power is equal to 100% of rated power and that the reactive power is equal to 0% of rated power.
3. Change the angle between the injected current and voltage to *Angle1* + 90°. Check that the monitored active power is equal to 0% of rated power and that the reactive power is equal to 100% of rated power.
4. Change the angle between the injected current and voltage back to 0°. Decrease the current slowly until the START1 signal, start of stage 1, is activated.

5. Increase the current to 100% of *IBase*.
6. Switch the current off and measure the time for activation of TRIP1, trip of stage 1.
7. If a second stage is used, repeat steps 2 to 6 for the second stage.

13.5.11.2 Completing the test

Continue to test another function or end the test by changing the *Test mode* setting to *Off*. Restore connections and settings to their original values, if they were changed for testing purposes.

13.5.12 Directional overpower protection GOPPDOP

Prepare the IED for verification of settings as outlined in section "Overview" and section "Preparing for test" in this chapter.

13.5.12.1 Verifying the settings

The overpower protection shall be set to values according to the real set values to be used. The test is made by means of injection of voltage and current where the amplitude of both current and voltage and the phase angle between the voltage and current can be controlled. During the test the analog outputs of active and reactive power shall be monitored.

1. Connect the test set for injection of voltage and current corresponding to the mode to be used in the application. If a three phase test set is available this could be used for all the modes. If a single phase current/voltage test set is available the test set should be connected to a selected input for one phase current and voltage.
2. Adjust the injected current and voltage to the set rated values in % of *IBase* and *UBase* (converted to secondary current and voltage). The angle between the injected current and voltage shall be set equal to the set direction *Angle1*, angle for stage 1 (equal to 0° for low forward power protection and equal to 180° for reverse power protection). Check that the monitored active power is equal to 100% of rated power and that the reactive power is equal to 0% of rated power.
3. Change the angle between the injected current and voltage to *Angle1* + 90°. Check that the monitored active power is equal to 0% of rated power and that the reactive power is equal to 100% of rated power.
4. Change the angle between the injected current and voltage back to *Angle1* value. Increase the current slowly from 0 until the START1 signal, start of stage 1, is activated. Check the injected power and compare it to the set value *Power1*, power setting for stage 1 in % of *Sbase*.
5. Increase the current to 100% of *IBase* and switch the current off.
6. Switch the current on and measure the time for activation of TRIP1, trip of stage 1.
7. If a second stage is used, repeat steps 2 to 6 for the second stage.

13.5.12.2 Completing the test

Continue to test another function or end the test by changing the *Test mode* setting to *Off*. Restore connections and settings to their original values, if they were changed for testing purposes.

13.5.13 Broken conductor check BRCPTOC

Prepare the IED for verification of settings as outlined in section "Overview" and section "Preparing for test" in this chapter.

13.5.13.1 Measuring the operate and time limit of set values

Procedure

1. Check that the input logical signal BLOCK to the BRCPTOC function block is logical zero and note on the local HMI that the output signal TRIP from the BRCPTOC function block is equal to the logical 0.
2. Set the measured current (fault current) in one phase to about 110% of the set operating current *IP*>.
   Observe to not exceed the maximum permitted overloading of the current circuits in the terminal.
3. Switch on the fault current and measure the operating time of BRCPTOC.
   Use the TRIP signal from the configured binary output to stop the timer.
4. Compare the measured time with the set value *tOper*.
5. Activate the BLOCK binary input.
6. Switch on the fault current (110% of the setting) and wait longer than the set value *tOper*.
   No TRIP signal should appear.
7. Switch off the fault current.
8. Set the measured current (fault current) in same phase to about 90% of the set operating current *IP*>. Switch off the current.
9. Switch on the fault current and wait longer than the set value *tOper*.
   No TRIP signal should appear.
10. Switch off the fault current.

13.5.13.2 Completing the test

Continue to test another function or end the test by changing the *Test mode* setting to *Off*. Restore connections and settings to their original values, if they were changed for testing purposes.

13.6 Voltage protection

13.6.1 Two step undervoltage protection UV2PTUV

Prepare the IED for verification of settings as outlined in section "Overview" and section "Preparing for test" in this chapter.

13.6.1.1 Verifying the settings

Verification of START value and time delay to operate for Step1

1. Check that the IED settings are appropriate, especially the START value, the definite time delay and the *1 out of 3* operation mode.
2. Supply the IED with three-phase voltages at their rated values.
3. Slowly decrease the voltage in one of the phases, until the START signal appears.
4. Note the operate value and compare it with the set value.
5. Increase the measured voltage to rated load conditions.
6. Check that the START signal resets.
7. Instantaneously decrease the voltage in one phase to a value about 20% lower than the measured operate value.
8. Measure the time delay for the TRIP signal, and compare it with the set value.

Extended testing

1. The test above can now be repeated for step 2.
2. The tests above can be repeated for *2 out of 3* and for *3 out of 3* operation mode.
3. The tests above can be repeated to check security, that is, the START and operate signals, that are not supposed to appear, - do not.
4. The tests above can be repeated to check the time to reset.
5. The tests above can be repeated to test the inverse time characteristic.

13.6.1.2 Completing the test

Continue to test another function or end the test by changing the *Test mode* setting to *Off*. Restore connections and settings to their original values, if they were changed for testing purposes.

13.6.2 Two step overvoltage protection OV2PTOV

Prepare the IED for verification of settings as outlined in section "Overview" and section "Preparing for test" in this chapter.

13.6.2.1 Verifying the settings

Procedure

1. Apply single-phase voltage below the set value *U1*>.
2. Slowly increase the voltage until the ST1 signal appears.
3. Note the operate value and compare it with the set value.
4. Switch the applied voltage off.
5. Set and apply about 20% higher voltage than the measured operate value for one phase.
6. Measure the time delay for the TR1 signal and compare it with the set value.
7. Repeat the test for step 2.

13.6.2.2 Completing the test

Continue to test another function or end the test by changing the *Test mode* setting to *Off*. Restore connections and settings to their original values, if they were changed for testing purposes.

13.6.3 Two step residual overvoltage protection ROV2PTOV

Prepare the IED for verification of settings as outlined in section "Overview" and section "Preparing for test" in this chapter.

13.6.3.1 Verifying the settings

1. Apply the single-phase voltage either to a single phase voltage input or to a residual voltage input with the start value below the set value *U1*>.
2. Slowly increase the value until ST1 appears.
3. Note the operate value and compare it with the set value.
4. Switch the applied voltage off.
5. Set and apply about 20% higher voltage than the measured operate value for one phase.
6. Measure the time delay for the TR1 signal and compare it with the set value.
7. Repeat the test for step 2.

13.6.3.2 Completing the test

Continue to test another function or end the test by changing the *Test mode* setting to *Off*. Restore connections and settings to their original values, if they were changed for testing purposes.

13.6.4 Voltage differential protection VDCPTOV

Prepare the IED for verification of settings as outlined in section "Overview" and section "Preparing for test" in this chapter.

13.6.4.1 Check of undervoltage levels

This test is relevant if the setting *BlkDiffAtULow* = *Yes*.

Check of *U1Low*

Procedure

1. Connect voltages to the IED according to valid connection diagram and figure 56.
2. Apply voltage higher than the highest set value of *UDTrip*, *U1Low* and *U2Low* to the U1 three-phase inputs and to one phase of the U2 inputs according to figure 56.
   The voltage differential START signal is set.

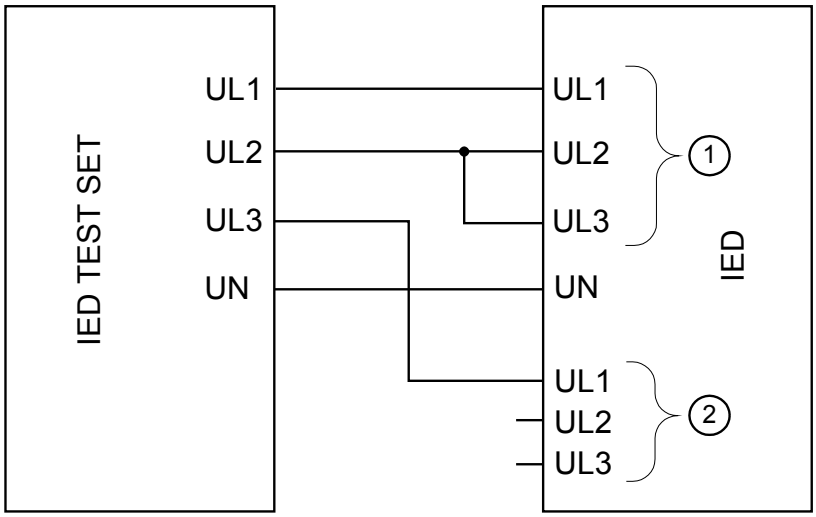

IEC07000106-1-en.vsd

Figure 56: Connection of the test set to the IED for test of U1 block level

where:

1 is three-phase voltage group1 (U1)

2 is three-phase voltage group2 (U2)

3. Decrease slowly the voltage in phase UL1 of the test set until the START signal resets.
4. Check U1 blocking level by comparing the voltage level at reset with the set undervoltage blocking *U1Low*.
5. Repeat steps 2 to 4 to check *U1Low* for the other phases.

The connections to U1 must be shifted to test another phase. (UL1 to UL2, UL2 to UL3, UL3 to UL1)

Check of *U2Low*

Procedure

1. Connect voltages to the IED according to valid connection diagram and figure 57.

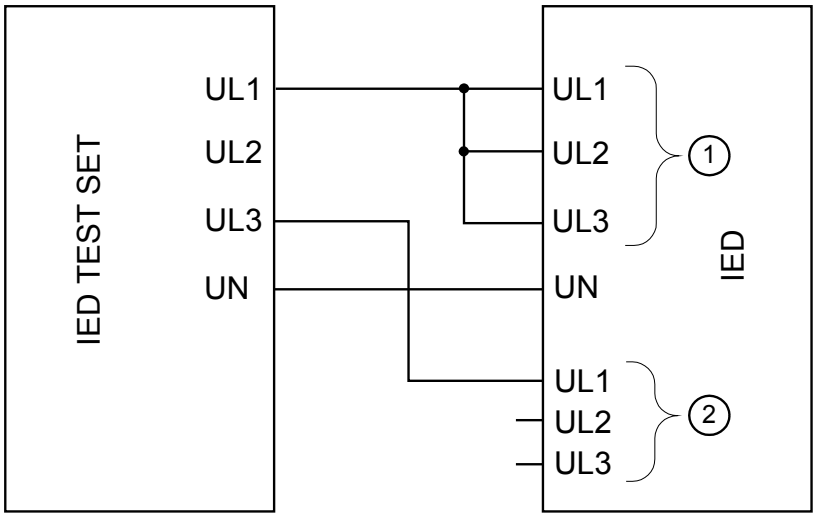

IEC07000107-1-en.vsd

Figure 57: Connection of the test set to the IED for test of U2 block level

where:

1 is three-phase voltage group1 (U1)

2 is three-phase voltage group2 (U2)

2. Apply voltage higher than the highest set value of *UDTrip*, *U1Low* and *U2Low* to the U1 three-phase inputs and to one phase of the U2 inputs according to figure 57.
   The voltage differential START signal is set.
3. Decrease slowly the voltage in phase UL3 of the test set until the START signal resets.
4. Check U2 blocking level by comparing the voltage level at reset with the set undervoltage blocking *U2Low*.

13.6.4.2 Check of voltage differential trip and alarm levels

Procedure

1. Connect voltages to the IED according to valid connection diagram and figure 58.

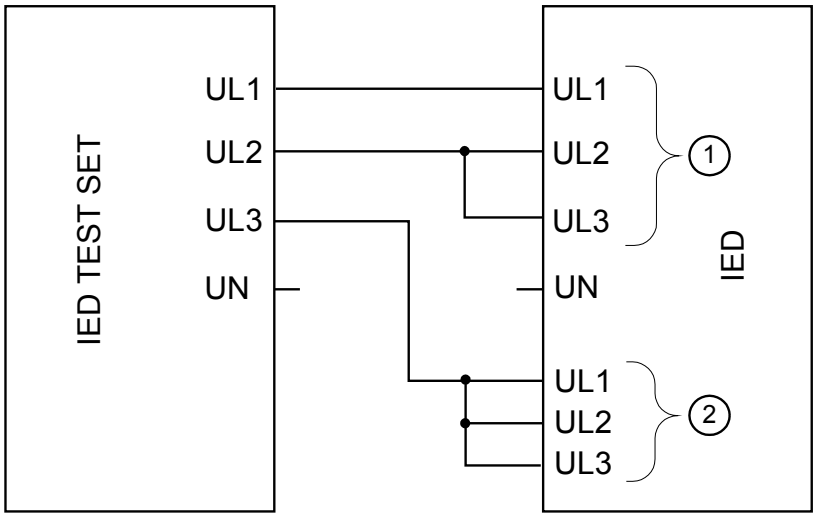

IEC07000108-1-en.vsd

Figure 58: Connection of the test set to the IED for test of alarm levels, trip levels and trip timer

where:

1 is three-phase voltage group1 (U1)

2 is three-phase voltage group2 (U2)

2. Apply 1.2 · Ur (rated voltage) to the U1 and U2 inputs.
3. Decrease slowly the voltage of in phase UL1 of the test set until the ALARM signal is activated.

The ALARM signal is delayed with timer *tAlarm*

4. Check the alarm operation level by comparing the differential voltage level at ALARM with the set alarm level *UDAlarm*.
5. Continue to slowly decrease the voltage until START signal is activated.
6. Check the differential voltage operation level by comparing the differential voltage level at START with the set trip level *UDTrip*.
7. Repeat steps 1 to 2 to check the other phases.
   Observe that the connections to U1 must be shifted to test another phase. (UL1 to UL2, UL2 to UL3, UL3 to UL1)

13.6.4.3 Check of trip and trip reset timers

Procdure

1. Connect voltages to the IED according to valid connection diagram and figure 58.
2. Set Ur (rated voltage) to the U1 inputs and increase U2 voltage until differential voltage is 1.5 · operating level (*UDTrip*).
3. Switch on the test set. Measure the time from activation of the START signal until TRIP signal is activated.
4. Check the measured time by comparing it to the set trip time *tTrip*.
5. Increase the voltage until START signal resets. Measure the time from reset of START signal to reset of TRIP signal.
6. Check the measured time by comparing it to the set trip reset time *tReset*.

13.6.4.4 Final adjustment of compensation for VT ratio differences

Procedure

1. With the protection in test mode, view the differential voltage service values in each phase on the local HMI under **Main menu/Test/Function status/ Voltage protection/VoltageDiff(PTOV,60)/VDCx**.

   The IED voltage inputs should be connected to the VTs according to valid connection diagram.

2. Record the differential voltages.
3. Calculate the compensation factor *RFLx* for each phase.
   For information about calculation of the compensation factor, see the application manual.
4. Set the compensation factors on the local HMI under **Main menu/Settings/ Settings group N/Voltage protection/VoltageDiff(PTOV,60)/VDCx**
5. Check that the differential voltages are close to zero.

13.6.4.5 Completing the test

Continue to test another function or end the test by changing the *Test mode* setting to *Off*. Restore connections and settings to their original values, if they were changed for testing purposes.

13.6.5 Loss of voltage check LOVPTUV

Prepare the IED for verification of settings as outlined in section "Overview" and section "Preparing for test" in this chapter.

13.6.5.1 Measuring the operate limit of set values

1. Check that the input logical signals BLOCK, CBOPEN and VTSU are logical zero.
2. Supply a three-phase rated voltage in all three phases and note on the local HMI that the TRIP logical signal is equal to the logical 0.
3. Switch off the voltage in all three phases.
   After set *tTrip* time a TRIP signal appears on the corresponding binary output or on the local HMI.

   Note that TRIP at this time is a pulse signal, duration should be according to set *tPulse*.

4. Inject the measured voltages to their rated values for at least set *tRestore* time.
5. Activate the CBOPEN binary input.
6. Simultaneously disconnect all the three-phase voltages from the IED.
   No TRIP signal should appear.
7. Inject the measured voltages to their rated values for at least set *tRestore* time.
8. Activate the VTSU binary input.
9. Simultaneously disconnect all the three-phase voltages from the *tRestore*.
   No TRIP signal should appear.
10. Reset the VTSU binary input.
11. Inject the measured voltages to their rated values for at least set *tRestore* time.
12. Activate the BLOCK binary input.
13. Simultaneously disconnect all the three-phase voltages from the terminal.
    No TRIP signal should appear.
14. Reset the BLOCK binary input.

13.6.5.2 Completing the test

Continue to test another function or end the test by changing the *Test mode* setting to *Off*. Restore connections and settings to their original values, if they were changed for testing purposes.

13.7 Frequency protection

13.7.1 Underfrequency protection SAPTUF

Prepare the IED for verification of settings as outlined in section "Overview" and section "Preparing for test" in this chapter.

13.7.1.1 Verifying the settings

Verification of START value and time delay to operate

1. Check that the IED settings are appropriate, especially the START value and the definite time delay.
2. Supply the IED with three-phase voltages at their rated values.
3. Slowly decrease the frequency of the applied voltage, until the START signal appears.
4. Note the operate value and compare it with the set value.
5. Increase the frequency until rated operating levels are reached.
6. Check that the START signal resets.
7. Instantaneously decrease the frequency of the applied voltage to a value about 20% lower than the operate value.
8. Measure the time delay of the TRIP signal, and compare it with the set value.

Extended testing

1. The test above can be repeated to check the time to reset.
2. The tests above can be repeated to test the voltage dependent inverse time characteristic.

Verification of the low voltage magnitude blocking

1. Check that the IED settings are appropriate, especially the *StartFrequency*, *IntBlockLevel*, and the *TimeDlyOperate*.
2. Supply the IED with three-phase voltages at rated values.
3. Slowly decrease the magnitude of the applied voltage, until the BLKDMAGN signal appears.
4. Note the voltage magnitude value and compare it with the set value *IntBlockLevel*.
5. Slowly decrease the frequency of the applied voltage, to a value below *StartFrequency*.
6. Check that the START signal does not appear.
7. Wait for a time corresponding to *TimeDlyOperate*, and make sure that the TRIP signal not appears.

13.7.1.2 Completing the test

Continue to test another function or end the test by changing the *Test mode* setting to *Off*. Restore connections and settings to their original values, if they were changed for testing purposes.

13.7.2 Overfrequency protection SAPTOF

Prepare the IED for verification of settings as outlined in section "Overview" and section "Preparing for test" in this chapter.

13.7.2.1 Verifying the settings

Verification of START value and time delay to operate

1. Check that the settings in the IED are appropriate, especially the START value and the definite time delay.
2. Supply the IED with three-phase voltages at their rated values.
3. Slowly increase the frequency of the applied voltage, until the START signal appears.
4. Note the operate value and compare it with the set value.
5. Decrease the frequency to rated operating conditions.
6. Check that the START signal resets.
7. Instantaneously increase the frequency of the applied voltage to a value about 20% higher than the operate value.
8. Measure the time delay for the TRIP signal, and compare it with the set value.

Extended testing

1. The test above can be repeated to check the time to reset.

Verification of the low voltage magnitude blocking

1. Check that the settings in the IED are appropriate, especially the *StartFrequency*, *IntBlocklevel*, and the *TimeDlyOperate*.
2. Supply the IED with three-phase voltages at their rated values.
3. Slowly decrease the magnitude of the applied voltage, until the BLKDMAGN signal appears.
4. Note the voltage magnitude value and compare it with the set value, *IntBlocklevel*.
5. Slowly increase the frequency of the applied voltage, to a value above *StartFrequency*.
6. Check that the START signal does not appear.
7. Wait for a time corresponding to *TimeDlyOperate*, and make sure that the TRIP signal does not appear.

13.7.2.2 Completing the test

Continue to test another function or end the test by changing the *Test mode* setting to *Off*. Restore connections and settings to their original values, if they were changed for testing purposes.

13.7.3 Rate-of-change frequency protection SAPFRC

Prepare the IED for verification of settings as outlined in section "Overview" and section "Preparing for test" in this chapter.

13.7.3.1 Verifying the settings

Verification of START value and time delay to operate

1. Check that the settings in the IED are appropriate, especially the START value and the definite time delay. Set *StartFreqGrad*, to a rather small negative value.
2. Supply the IED with three-phase voltages at their rated values.
3. Slowly decrease the frequency of the applied voltage, with an increasing rate-of-change that finally exceeds the setting of *StartFreqGrad*, and check that the START signal appears.
4. Note the operate value and compare it with the set value.
5. Increase the frequency to rated operating conditions, and zero rate-of-change.
6. Check that the START signal resets.
7. Instantaneously decrease the frequency of the applied voltage to a value about 20% lower than the nominal value.
8. Measure the time delay for the TRIP signal, and compare it with the set value.

Extended testing

1. The test above can be repeated to check a positive setting of *StartFreqGrad*.
2. The tests above can be repeated to check the time to reset.
3. The tests above can be repeated to test the RESTORE signal, when the frequency recovers from a low value.

13.7.3.2 Completing the test

Continue to test another function or end the test by changing the *Test mode* setting to *Off*. Restore connections and settings to their original values, if they were changed for testing purposes.

13.8 Multipurpose protection

13.8.1 General current and voltage protection CVGAPC

Prepare the IED for verification of settings as outlined in section "Overview" and section "Preparing for test" in this chapter.

One of the new facilities within the general current and voltage protection function CVGAPC is that the value, which is processed and used for evaluation in the function, can be chosen in many different ways by the setting parameters *CurrentInput* and *VoltageInput*.

These setting parameters decide what kind of preprocessing the connected three-phase CT and VT inputs shall be subjected to. That is, for example, single-phase quantities, phase-to-phase quantities, positive sequence quantities, negative sequence quantities, maximum quantity from the three-phase group, minimum

quantity from the three-phase group, difference between maximum and minimum quantities (unbalance) can be derived and then used in the function.

Due to the versatile possibilities of CVGAPC itself, but also the possibilities of logic combinations in the application configuration of outputs from more than one CVGAPC function block, it is hardly possible to define a fully covering general commissioning test.

13.8.1.1 Built-in overcurrent feature (non-directional)

Procedure

1. Go to **Main menu/Test/Function test modes/Multipurpose protection/ GeneralCurrentVoltage(GAPC)/GFx** and make sure that CVGAPC to be tested is unblocked and other functions that might disturb the evaluation of the test are blocked.
2. Connect the test set for injection of three-phase currents to the appropriate current terminals of the IED in the 670 series.
3. Inject current(s) in a way that relevant measured current (according to setting parameter *CurrentInput*) is created from the test set. Increase the current(s) until the low set stage operates and check against the set operate value.
4. Decrease the current slowly and check the reset value.
5. Block high set stage if the injection current will activate the high set stage when testing the low set stage according to below.
6. Connect a TRIP output contact to the timer.
7. Set the current to 200% of the operate value of low set stage, switch on the current and check the time delay.
   For inverse time curves, check the operate time at a current equal to 110% of the operate current at *tMin*.
8. Check that TRIP and START contacts operate according to the configuration logic.
9. Release the blocking of the high set stage and check the operate and reset value and the time delay for the high set stage in the same way as for the low set stage.
10. Finally check that START and TRIP information is stored in the event menu.

Information on how to use the event menu is found in the operator's manual.

13.8.1.2 Overcurrent feature with current restraint

The current restraining value has also to be measured or calculated and the influence on the operation has to be calculated when the testing of the operate value is done.

Procedure

1. Operate value measurement
   The current restraining value has also to be measured or calculated and the influence on the operation has to be calculated when the testing of the operate value is done.

13.8.1.3 Overcurrent feature with voltage restraint

Procedure

1. Connect the test set for injection of three-phase currents and three-phase voltages to the appropriate current and voltage terminals of the IED.
2. Inject current(s) and voltage(s) in a way that relevant measured (according to setting parameter *CurrentInput* and *VoltageInput*) currents and voltages are created from the test set.
   Overall check in principal as above (non-directional overcurrent feature)
3. Operate value measurement
   The relevant voltage restraining value (according to setting parameter *VoltageInput*) has also to be injected from the test set and the influence on the operate value has to be calculated when the testing the operate value is done.
4. Operate time measurement
   Definite times may be tested as above (non-directional overcurrent feature). For inverse time characteristics the START value (to which the overcurrent ratio has to be calculated) is the actual pickup value as got with actual restraining from the voltage restraining quantity.

13.8.1.4 Overcurrent feature with directionality

Please note that the directional characteristic can be set in two different ways either just dependent on the angle between current and polarizing voltage (setting parameter *DirPrinc_OC1* or *DirPrinc_OC2* set to or in a way that the operate value also is dependent on the angle between current and polarizing voltage according to the I · cos(Φ) law (setting parameter *DirPrincOC1* or *DirPrincOC2* set to I · cos(Φ). This has to be known if a more detailed measurement of the directional characteristic is made, than the one described below.

Procedure

1. Connect the test set for injection of three-phase currents and three-phase voltages to the appropriate current and voltage terminals of the IED.
2. Inject current(s) and voltage(s) in a way that relevant measured (according to setting parameter *CurrentInput* and *VoltageInput*) currents and voltages are created from the test set.
3. Set the relevant measuring quantity current to lag or lead (lag for negative RCA angle and lead for positive RCA angle) the relevant polarizing quantity voltage by an angle equal to the set IED characteristic angle (rca-dir) when forward directional feature is selected and the *CTstarpoint* configuration parameter is set to *ToObject*.

If reverse directional feature is selected or *CTstarpoint* configuration parameter is set to *FromObject*, the angle between current and polarizing voltage shall be set equal to rca-dir+180°.

4. Overall check in principal as above (non-directional overcurrent feature)
5. Reverse the direction of the injection current and check that the protection does not operate.
6. Check with low polarization voltage that the feature becomes non-directional, blocked or with memory according to the setting.

13.8.1.5 Over/Undervoltage feature

Procedure

1. Connect the test set for injection three-phase voltages to the appropriate voltage terminals of the IED.
2. Inject voltage(s) in a way that relevant measured (according to setting parameter *VoltageInput*) voltages are created from the test set.
3. Overall check in principal as above (non-directional overcurrent feature) and correspondingly for the undervoltage feature.

13.8.1.6 Completing the test

Continue to test another function or end the test by changing the *Test mode* setting to *Off*. Restore connections and settings to their original values, if they were changed for testing purposes.

13.9 Secondary system supervision

13.9.1 Current circuit supervision CCSRDIF

Prepare the IED for verification of settings as outlined in section "Overview" and section "Preparing for test" in this chapter.

The Current circuit supervision function CCSRDIF is conveniently tested with the same three-phase test set as used when testing the measuring functions in the IED.

The condition for this procedure is that the setting of *IMinOp* is lower than the setting of *Ip>Block*.

13.9.1.1 Verifying the settings

1. Check the input circuits and the operate value of the *IMinOp* current level detector by injecting current, one phase at a time.
2. Check the phase current blocking function for all three phases by injection current, one phase at a time. The output signals shall reset with a delay of 1 second when the current exceeds 1.5 · *IBase*.
3. Inject a current 0.9 · *IBase* to phase L1 and a current 0.15 · *IBase* to the reference current input I5.
4. Decrease slowly the current to the reference current input and check that blocking is obtained when the current is about 0.1 · *IBase*.

13.9.1.2 Completing the test

Continue to test another function or end the test by changing the *Test mode* setting to *Off*. Restore connections and settings to their original values, if they were changed for testing purposes.

13.9.2 Fuse failure supervision SDDRFUF

Prepare the IED for verification of settings as outlined in section "Overview" and section "Preparing for test" in this chapter.

The verification is divided in two main parts. The first part is common to all fuse failure supervision options, and checks that binary inputs and outputs operate as expected according to actual configuration. In the second part the relevant set operate values are measured.

13.9.2.1 Checking that the binary inputs and outputs operate as expected

Procedure

1. Simulate normal operating conditions with the three-phase currents in phase with their corresponding phase voltages and with all of them equal to their rated values.
2. Connect the nominal dc voltage to the DISCPO binary input.
   - The signal BLKU should appear with almost no time delay.
   - No signals BLKZ and 3PH should appear on the IED.
   - Only the distance protection function operates.
   - No other undervoltage-dependent functions must operate.
3. Disconnect the dc voltage from the DISCPOS binary input terminal.
4. Connect the nominal dc voltage to the MCBOP binary input.
   - The BLKU and BLKZ signals should appear without any time delay.
   - No undervoltage-dependent functions must operate.
5. Disconnect the dc voltage from the MCBOP binary input terminal.

6. Disconnect one of the phase voltages and observe the logical output signals on the binary outputs of the IED.. BLKU and BLKZ signals should simultaneously appear.
   BLKU and BLKZ signals should simultaneously appear.
7. After more than 5 seconds disconnect the remaining two-phase voltages and all three currents.
   - There should be no change in the high status of the output signals BLKU and BLKZ.
   - The signal 3PH will appear.
8. Establish normal voltage and current operating conditions simultaneously and observe the corresponding output signals.
   They should change to logical 0 as follows:
   - Signal 3PH after about 25ms
   - Signal BLKU after about 50ms
   - Signal BLKZ after about 200ms

13.9.2.2 Measuring the operate value for the negative sequence function

Measure the operate value for the negative sequence function, if included in the IED.

Procedure

1. Simulate normal operating conditions with the three-phase currents in phase with their corresponding phase voltages and with all of them equal to their rated values.
2. Slowly decrease the measured voltage in one phase until the BLKU signal appears.
3. Record the measured voltage and calculate the corresponding negative-sequence voltage according to the equation.
   Observe that the voltages in the equation are phasors.

$$3 \cdot \overline{U_2} = \overline{U_{L1}} + a^2 \cdot \overline{U_{L2}} + a \cdot \overline{U_{L3}}$$

(Equation 13)

Where:

$\overline{U_{L1}}$ $\overline{U_{L2}}$ and $\overline{U_{L3}}$ = the measured phase voltages

$$a = 1 \cdot e^{j\frac{2 \cdot \pi}{3}} = -0,5 + j\frac{\sqrt{3}}{2}$$

4. Compare the result with the set value (consider that the set value *3U2>* is in percentage of the base voltage *UBase*) of the negative-sequence operating voltage.

13.9.2.3 Measuring the operate value for the zero-sequence function

Measure the operate value for the zero-sequence function, if included in the IED.

Procedure

1. Simulate normal operating conditions with the three-phase currents in phase with their corresponding phase voltages and with all of them equal to their rated values.
2. Slowly decrease the measured voltage in one phase until the BLKU signal appears.
3. Record the measured voltage and calculate the corresponding zero-sequence voltage according to the equation.
   Observe that the voltages in the equation are phasors.

$$3 \cdot \overline{U_0} = \overline{U_{L1}} + \overline{U_{L2}} + \overline{U_{L3}}$$

(Equation 16)

Where:

$\overline{U_{L1}}$, $\overline{U_{L2}}$ and $\overline{U_{L3}}$ = the measured phase voltages.

4. Compare the result with the set value (consider that the set value *3U0>* is in percentage of the base voltage of the zero-sequence operating voltage.

13.9.2.4 Checking the operation of the du/dt and di/dt based function

Check the operation of the du/dt and di/dt based function, if included in the IED.

Procedure

1. Simulate normal operating conditions with the three-phase currents in phase with their corresponding phase voltages and with all of them equal to their rated values.
2. Connect the nominal dc voltage to the CBCLOSED binary input.
3. Change the voltages and currents in all three phases simultaneously.
   The voltage change should be greater then set *DU>* and the current change should be less than the set *DI<*.
   - The BLKU and BLKZ signals appear without any time delay. The BLKZ signal will be activated, only if the internal deadline detection is not activated at the same time.
   - 3PH should appear after 5 seconds, if the remaining voltage levels are lower than the set *UDLD<* of the DLD function.
4. Apply normal conditions as in step 3.
   The BLKU, BLKZ and 3PH signals should reset, if activated, see step 1.
5. Change the voltages and currents in all three phases simultaneously.

The voltage change should be greater than set *DU*> and the current change should be greater than the set *DI*<.
The BLKU, BLKZ and 3PH signals should not appear.

6. Disconnect the dc voltage to the CBCLOSED binary input.
7. Apply normal conditions as in step 1.
8. Repeat step 3.
9. Connect the nominal voltages in all three phases and feed a current below the operate level in all three phases.
10. Keep the current constant. Disconnect the voltage in all three phases simultaneously.
    The BLKU, BLKZ and 3PH signals should not appear.

13.9.2.5 Completing the test

Continue to test another function or end the test by changing the *Test mode* setting to *Off*. Restore connections and settings to their original values, if they were changed for testing purposes.

13.10 Control

13.10.1 Synchrocheck, energizing check, and synchronizing SESRSYN

This section contains instructions on how to test the synchrocheck, energizing check, and synchronizing function SESRSYN for single and double CB and for 1½ breaker arrangements.

This section contains instructions on how to test the synchrocheck and energizing check for single CB with or without the synchronizing function.

Prepare the IED for verification of settings as outlined in section "Overview"and section "Preparing for test" in this chapter.

At commissioning and periodical checks, the functions shall be tested with the used settings. To test a specific function, it might be necessary to change some setting parameters, for example:

- *AutoEnerg = On/Off/DLLB/DBLL/Both*
- *ManEnerg = Off*
- *Operation = Off, On*
- Activation of the voltage selection function if applicable

The tests explained in the test procedures below describe the settings, which can be used as references during testing before the final settings are specified. After testing, restore the equipment to the normal or desired settings.

A secondary injection test set with the possibility to alter the phase angle by regulation of the resistive and reactive components is needed. The test set must also be able to generate different frequencies on different outputs.

The description below applies for a system with a nominal frequency of 50 Hz but can be directly transferred to 60 Hz. SESRSYN can be set to use different phases, phase to earth or phase to phase. Use the set voltages instead of what is indicated below.

Figure 59 shows the general test connection principle, which can be used during testing. This description describes the test of the version intended for one bay.

Figure 60 shows the general test connection for a 1½ breaker diameter with one-phase voltage connected to the line side.

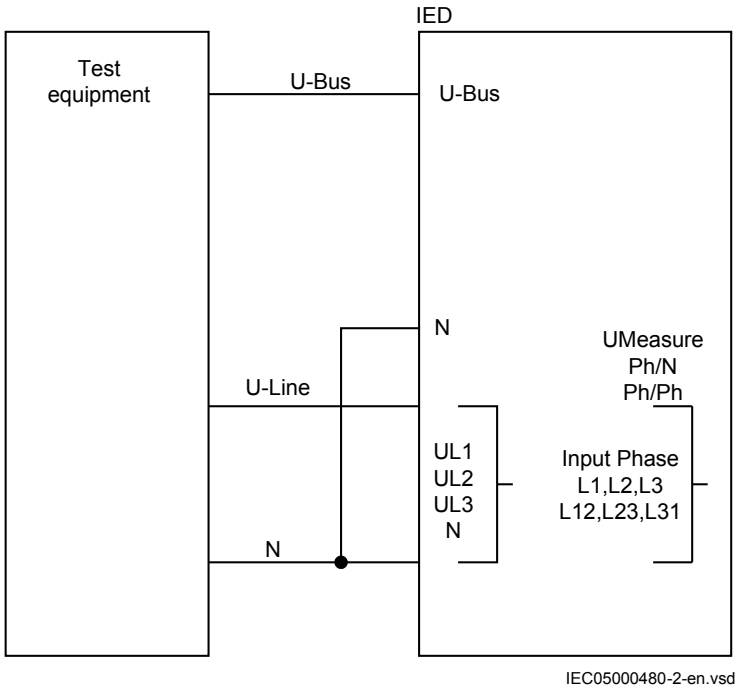

Figure 59: General test connection with three-phase voltage connected to the line side

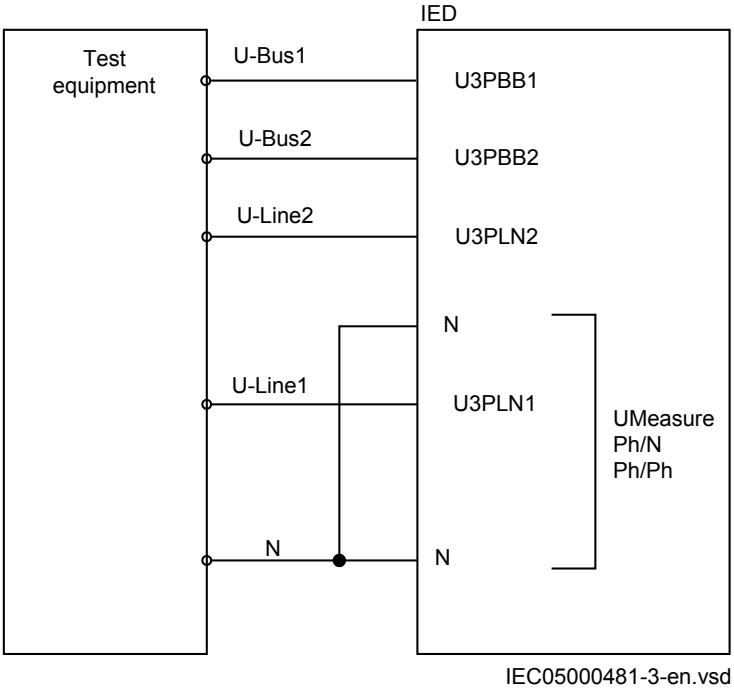

Figure 60: General test connection for a 1½ breaker diameter with one-phase voltage connected to the line side

13.10.1.1 Testing the synchronizing function

This section is applicable only if the synchronizing function is included.

The voltage inputs used are:

UP3LN1	UL1, UL2 or UL3 line 1 voltage inputs on the IED
UP3BB1	Bus1 voltage input on the IED

Testing the frequency difference

The frequency difference is in the example set at 0.20 Hz on the local HMI, and the test should verify that operation is achieved when the *FreqDiffMax* frequency difference is lower than 0.20 Hz. The test procedure below will depend on the settings used.

1. Apply voltages

1.1. U-Line = 100% *UBase*
1.2. f-line = 50.0 Hz and U-Bus = 100% *UBase*
1.3. f-bus = 50.2 Hz

2. Check that a closing pulse is submitted and at closing angle less than 2 degrees from phase equality. Modern test sets will evaluate this automatically.
3. Repeat with

   3.1. U-Bus = 80% *UBase*
   3.2. f-bus = 50.25 Hz, to verify that the function does not operate when frequency difference is above limit.

4. Repeat with different frequency differences for example, 100 mHz with f-bus nominal and line leading and for example 20 mHz (or just above *FreqDiffMin*) to verify that independent of frequency difference the closing pulse occurs within 2 degrees.
5. Verify that the closing command is not issued when the frequency difference is less than the set value *FreqDiffMin*.

13.10.1.2 Testing the synchronizing check

During the test of SESRSYN for a single bay arrangement, these voltage inputs are used:

U-Line	UL1, UL2 or UL3 voltage input on the IED
U-Bus	Bus voltage input on the IED

Testing the voltage difference

Set the voltage difference at 15% *UBase* on the local HMI, and the test should check that operation is achieved when the voltage difference *UDiffSC* is lower than 15% *UBase*.

The settings used in the test shall be final settings. The test shall be adapted to site setting values instead of values in the example below.

Test with no voltage difference between the inputs.

Test with a voltage difference higher than the set *UDiffSC*

1. Apply voltages U-Line (for example) = 80% *UBase* and U-Bus = 80% *UBase*.
2. Check that the AUTOSYOK and MANSYOK outputs are activated.
3. The test can be repeated with different voltage values to verify that the function operates within the set *UDiffSC*. Check with both U-Line and U-Bus respectively lower than the other.
4. Increase the U-Bus to 110% *UBase*, and the U-Line = 90% *UBase* and also the opposite condition.
5. Check that the two outputs for manual and auto synchronism are not activated.

Testing the phase angle difference

The phase angle differences *PhaseDiffM* and *PhaseDiffA* respectively are set to their final settings and the test should verify that operation is achieved when the phase angle difference is lower than this value both leading and lagging.

Test with no voltage difference

1. Apply voltages U-Line (for example) = 100% *UBase* and U-Bus = 100% *UBase*, with a phase difference equal to 0 degrees and a frequency difference lower than *FreqDiffA* and *FreqDiffM*
2. Check that the AUTOSYOK and MANSYOK outputs are activated.
   The test can be repeated with other phase difference values to verify that the function operates for values lower than the set ones, *PhaseDiffM* and *PhaseDiffA*. By changing the phase angle on the voltage connected to U-Bus, between ± dφ degrees, the user can check that the two outputs are activated for a phase difference lower than the set value. It should not operate for other values. See figure 61.

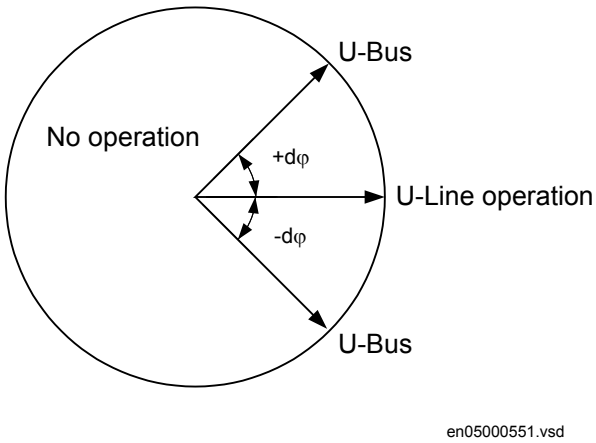

Figure 61: Test of phase difference.

3. Change the phase angle between +dφ and -dφ and verify that the two outputs are activated for phase differences between these values but not for phase differences outside, see figure 61.

Testing the frequency difference

The frequency difference test should verify that operation is achieved when the *FreqDiffA* and *FreqDiffM* frequency difference is lower than the set value for manual and auto synchronizing check, *FreqDiffA* and *FreqDiffM* respectively and that operation is blocked when the frequency difference is bigger.

Test with frequency difference = 0 mHz

Test with a frequency difference outside the set limits for manual and auto synchronizing check respectively.

1. Apply voltages U-Line equal to 100% *UBase* and U-Bus equal to 100% *UBase*, with a frequency difference equal to 0 mHz and a phase difference lower than the set value.
2. Check that the AUTOSYOK and MANSYOK outputs are activated.
3. Apply voltage to the U-Line equal to 100% *UBase* with a frequency equal to 50 Hz and voltage U-Bus equal to 100% *UBase*, with a frequency outside the set limit.
4. Check that the two outputs are not activated. The test can be repeated with different frequency values to verify that the function operates for values lower than the set ones. If a modern test set is used, the frequency can be changed continuously.

Testing the reference voltage

1. Use the same basic test connection as in figure 59.
   The voltage difference between the voltage connected to U-Bus and U-Line should be 0%, so that the AUTOSYOK and MANSYOK outputs are activated first.
2. Change the U-Line voltage connection to U-Line2 without changing the setting on the local HMI. Check that the two outputs are not activated.

13.10.1.3 Testing the energizing check

During the test of the energizing check function for a single bay arrangement, these voltage inputs are used:

U-Line	UL1, UL2 or UL3 voltage input on the IED
U-Bus	Bus voltage input on the IED

General

When testing the energizing check function for the applicable bus, arrangement shall be done for the energizing check functions. The voltage is selected by activation of different inputs in the voltage selection logic.

The test shall be performed according to the settings for the station. Test the alternatives below that are applicable.

Testing the dead line live bus (DLLB)

The test should verify that the energizing check function operates for a low voltage on the U-Line and for a high voltage on the U-Bus. This corresponds to the energizing of a dead line to a live bus.

1. Apply a single-phase voltage 100% *UBase* to the U-Bus, and a single-phase voltage 30% *UBase* to the U-Line.
2. Check that the AUTOENOK and MANENOK outputs are activated.
3. Increase the U-Line to 60% *UBase* and U-Bus to be equal to 100% *UBase*. The outputs should not be activated.
4. The test can be repeated with different values on the U-Bus and the U-Line.

Testing the dead bus live line (DBLL)

The test should verify that the energizing check function operates for a low voltage on the U-Bus and for a high voltage on the U-Line. This corresponds to an energizing of a dead bus from a live line.

1. Verify the local HMI settings *AutoEnerg* or *ManEnerg* to be *DBLL*.
2. Apply a single-phase voltage of 30% *UBase* to the U-Bus and a single-phase voltage of 100% *UBase* to the U-Line.
3. Check that the AUTOENOK and MANENOK outputs are activated.
4. Decrease the U-Line to 60% *UBase* and keep the U-Bus equal to 30% *UBase*. The outputs should not be activated.
5. The test can be repeated with different values on the U-Bus and the U-Line.

Testing both directions (DLLB or DBLL)

Procedure

1. Verify the local HMI settings *AutoEnerg* or *ManEnerg* to be *Both*.
2. Apply a single-phase voltage of 30% *UBase* to the U-Line and a single-phase voltage of 100% *UBase* to the U-Bus.
3. Check that the AUTOENOK and MANENOK outputs are activated.
4. Change the connection so that the U-Line is equal to100% *UBase* and the U-Bus is equal to 30% *UBase*. The outputs should still be activated.
5. The test can be repeated with different values on the U-Bus and the U-Line.

Testing the dead bus dead line (DBDL)

The test should verify that the energizing check function operates for a low voltage on both the U-Bus and the U-Line, that is, closing of the breaker in a non-energized system. Test is valid only when this function is used.

1. Verify the local HMI setting *AutoEnerg* to be *Off* and *ManEnerg* to be *DBLL*.
2. Set the parameter *ManEnergDBDL* to *On*.
3. Apply a single-phase voltage of 30% *UBase* to the U-Bus and a single-phase voltage of 30% *UBase* to the U-Line.
4. Check that the MANENOK output is activated.
5. Increase the U-Bus to 80% *UBase* and keep the U-Line equal to 30% *UBase*. The outputs should not be activated.
6. Repeat the test with *ManEnerg* set to *DLLB* with different values on the U-Bus and the U-Line voltage.

13.10.1.4 Testing the voltage selection

Testing the voltage selection for single CB arrangements

This test should verify that the correct voltage is selected for the measurement in the energizing check function used in a double-bus arrangement. Apply a single-phase voltage of 30% *UBase* to the U-Line and a single-phase voltage of 100% *UBase* to the U-Bus.

If the UB1/2OK inputs for the fuse failure are used, they must be activated, during tests below. Also verify that deactivation prevents operation and gives an alarm.

1. Connect the signals above to binary inputs and binary outputs.
2. Connect the voltage inputs to the analog inputs used for each bus or line depending of the type of busbar arrangement and verify that correct output signals are generated.

Testing the voltage selection for double breaker or breaker-and-a-half diameter when applicable

This test should verify that correct voltage is selected for the measurement in the energizing function used for a diameter in a One-and-a-half breaker arrangement. Apply single-phase voltages to the inputs. H means a voltage of 100% *UBase* and L means a voltage of 30% *UBase*. Verify that correct output signals are generated.

1. Connect the analog signals to the voltage inputs, in pair of two for U1 and U2. (Inputs U3P - BB1, BB2, LN1, LN2)
2. Activate the binary signals according to the used alternative. Verify the measuring voltage on the synchronizing check function SESRSYN. Normally it can be good to verify synchronizing check with the same voltages and phase angles on both voltages. The voltages should be verified to be available when selected and not available when another input is activated so connect only one voltage transformer reference at each time.
3. Record the voltage selection tests in a matrix table showing read values and AUTOSYOK/MANSYOK signals to document the test performed.

13.10.1.5 Completing the test

Continue to test another function or end the test by changing the *Test mode* setting to *Off*. Restore connections and settings to their original values, if they were changed for testing purposes.

13.10.2 Autorecloser SMBRREC

Verification of the autorecloser function SMBRREC can be considered to consist of two parts.

- One part to verify the internal logic and timing of the function
- One part to verify its interaction with the protection system

This section deals with verification of SMBRREC itself. However, it is practical to start SMBRREC by activating a protection function, for example, by secondary injection tests.

Prepare the IED for verification of settings as outlined in the section "Overview" and section "Preparing for test" in this chapter.

The purpose of verification before commissioning is to check that entered selections, setting parameters and configuration render the intended result. The function is flexible with many options and facilities. At commissioning only the selections and settings intended for use are verified. If one chooses to reduce some time settings in order to speed up verification, be careful to set the parameters at intended operational values at the end of the verification procedure. One such parameter is the *tReclaim* time and could result in a long delay of reclosing shots, for example, shot 2 and later ones.

The verification test is performed together with protection and trip functions. Figure 62 illustrates a suggested testing arrangement, where the circuit-breaker (CB) is simulated by an external bi-stable relay (BR), for example a relay type RXMVB2 or RXMD or Breaker Simulator of ABB. The following manual switches are used:

- Switch or push-button to close (SC)
- Switch or push-button to trip (ST)
- Switch for CB ready condition (SRY)

If no bi-stable relay or breaker simulator is available, replace it with two self-reset auxiliary relays and use a self-holding connection.

Use a secondary injection IED test set to operate the protection function. The test set shall be switched off when a trip signal is given or when the BR comes to open position to simulate real conditions.

The CB simulation can be made more elaborate, including simulation of the operating gear condition, CBREADY of either the type ready for a Close-Open (CO) cycle, or the type ready for an Open-Close -Open (OCO) cycle.

The CB condition CBREADY of a type, CO, shall be high (true) until a closing operation is performed. It then goes low (false) for a recharging time of about 5 - 10s. After that it is high again.

A CB condition CBREADY of a type, OCO shall be high (true) before and during tripping (Start reclosing). During tripping it goes low for a recharging time, for example, 10s. It may thus be low at the instant of reclosing. After each Open or Close operation it may need a recharging period before it goes high again.

In the example of CB simulation arrangement, the CBREADY condition is simulated by a manual switch, SRY.

Information and material for the verification:

- Protection or control unit, IED, configured and with settings entered.
- Configuration diagram for the IED
- Terminal diagram for the IED, or plant circuit diagram including the IED
- Technical reference manual for the IED
- IED test set for secondary injection
- Means to indicate, measure and record operation and times, for example an event recording facility
- A bi-stable relay (BR) or two auxiliary relays to simulate a CB
- Two push-buttons (SC, ST) to operate the BR and a change-over switch (SRY) to simulate CBREADY
- Possibly a switch simulation the synchronizing check (SYNC) condition

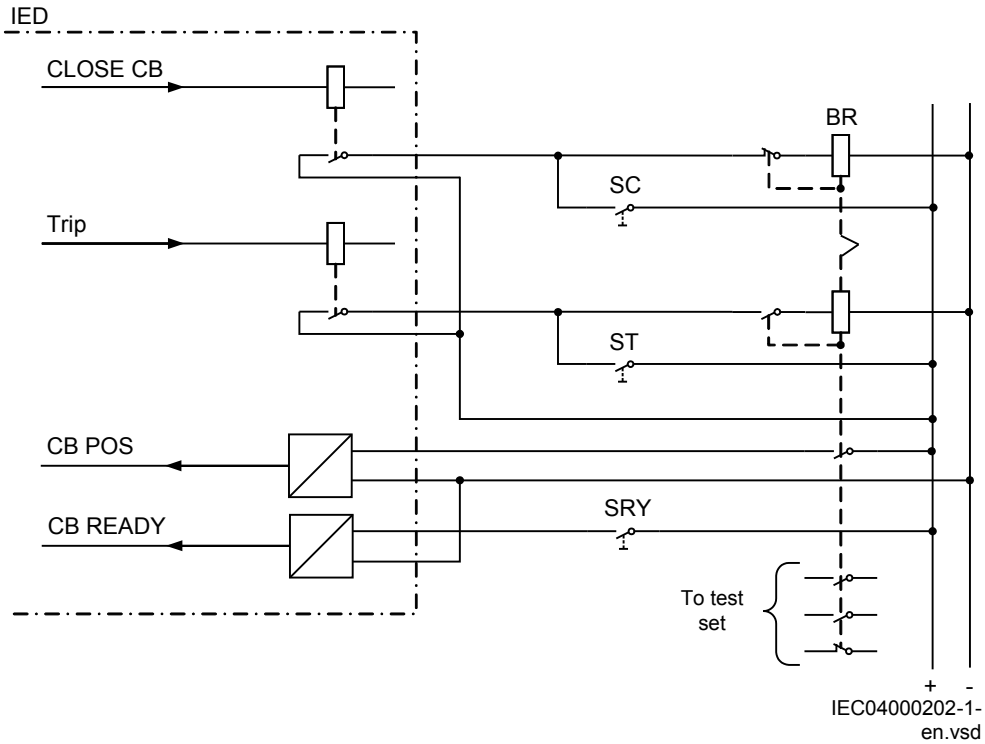

Figure 62: Simulating the CB operation by a bi-stable relay/breaker simulator and manual switches

13.10.2.1 Preparation of the verification

1. Check the function settings on the local HMI under **Main menu/Settings/Setting group N/Control/Autorecloser(RREC,79)/AR0x**

If any timer settings are reduced to speed up or facilitate the testing, they shall be set to normal after testing. A temporary label on the IED can be a reminder to restore normal settings after which a verification test should be performed.

2. Decide if a synchronizing check function SESRSYN shall be included in the test.
   If SESRSYN as an internal function or external device is not operated by the injection, it may be connected as a permanent high signal or controlled by a switch.
3. Read and make notes of the reclosing operation counters on the local HMI under **Main menu/Test/Function status/Control/AutoRecloser(RREC,79)/AR0x**
   Possibly reset the counters to *Zero*. Counters are reset in the reset menu.
4. Make arrangements for the simulation of the CB, for example as in figure 62.
5. Make arrangements for indication, recording and time measurements.
   The signals for CBPOS, START, CLOSECB, READY and other relevant signals should preferably be arranged for event recording with time tagging. If that is not possible, other means of time measurement and recording should be arranged.

13.10.2.2 Switching the autorecloser function to *On* and *Off*

1. Set the *Operation* setting to *Off* and check the state.
2. Set the *Operation* setting to *On* and check the state, including SETON and READY.
   The CB should be closed and ready.
3. If external control Off/On is connected, check that it works.
   Set *Operation* to *ExternalCtrl* and use that control to switch On and Off, and check the state of the function.

13.10.2.3 Verifying the autorecloser function SMBRREC

Select the test cases to be run according to what is applicable to the particular application. It can be, for example,

- three-phase single-shot reclosing
- two-shot reclosing
- single-phase and three-phase single-shot reclosing

Below, a case with single-phase and three-phase single-shot reclosing is described.

1. Set *Operation* = *On*.
2. If the autorecloser function SMBRREC is not to be operated, ensure that the SMBRREC input is activated. If SMBRREC is to be included, ensure that it is supplied with the appropriate AC quantities.
3. Simulate CB closed position by closing switch SC to make the BR relay pick-up.

4. Simulate CBREADY by closing the switch SRY, and leave it closed.
5. Inject AC quantities to give a trip, for example, one-phase trip, to the BR and to the START input.
   Observe and preferably record the operation. The BR relay shall trip and reclose (pick-up). After reclosing, the SRY switch can be opened for about 5s and then closed again.
   The autoreclosing open time and the sequence should be checked, for example in the event recording. Check also the operation indications (disturbance report) and the operation counters on the local HMI under **Main menu/Test/Function status/Control/AutoRecloser(RREC,79)/ARx**
   Should the operation not be as expected, this should be investigated. It could be caused by an inappropriate setting or missing condition such as CBREADY (or SMBRREC at three-phase reclosing).
6. Repeat the sequence by simulating a permanent fault.
   Shortly after the reclosing shot, a new fault is applied. If a single-shot reclosing program is selected, there shall be one reclosing operation and then blocking of SMBRREC for the set Reclaim time.
   Before a new reclosing sequence can be run, the CBREADY and CBPOS (CB closed) must be set manually.
7. Repeat the sequence by simulating a three-phase transient and permanent faults, and other applicable cases, such as signal to STARTHS and high-speed reclosing.
   If just single-phase reclosing is selected, *FirstShot = 1ph*, a check can be run to make sure that a three-phase trip does not result in any reclosing. Other similar cases can be checked as required.

13.10.2.4 Checking the reclosing conditions

When checking the influence of a releasing condition it is suggested to first run a sequence with the condition fulfilled. When the condition signal is removed, and a new sequence is run, it indicates that the result was due to the changed condition. In case of a blocking signal the procedure should be similar. Start without the blocking or inhibit signal, and then run a sequence with the blocking or inhibit signal added.

Checking the influence of the INHIBIT signal

1. Check that the autorecloser function SMBRREC is operative, for example, by making a reclosing shot without the INHIBIT signal.
2. Apply a fault and thereby a START signal. At the same time, or during the open time, apply a signal to the input INHIBIT.
3. Check that the reclosing sequence is interrupted and no reclosing takes place.

Check closing onto a fault

1. Check that the autorecloser function SMBRREC is operative, for example by making a reclosing shot.

Keep the CBREADY signal high.
2. Set the breaker simulating relay BR in Open position.
3. Close the BR relay and apply immediately a fault and thereby a START signal.
4. Check that no reclosing takes place.

Checking the influence of CB not ready for reclosing

1. Check that the autorecloser function SMBRREC is operative, for example by making a reclosing shot.
   Keep the CB simulator BR closed. Remove the CBREADY signal by opening SRY.
2. Apply a fault and thereby a START signal.
3. Check that no reclosing takes place.

Checking the influence of synchronizing check (at three-phase reclosing)

1. Check that the autorecloser function SMBRREC is operative, for example, by making a three-phase reclosing shot with the synchronizing check condition.
   Remove the SMBRREC signal.
2. Apply a fault causing three-phase trip and thereby a START and a TR3P signal.
3. Wait for the *tSync* time out limit.
   Check that no reclosing is made.

Checking the response when autoreclosing is *Off*

Procedure

1. Check that the autorecloser function SMBRREC is operative, for examle by making a reclosing shot.
   Set the autoreclosing operation to *Off*, for examle by external control.
   The output READY shall be low, and PREP3P shall be high.
2. Apply a fault and thereby a START signal.
3. Check that no reclosing takes place.

Testing autoreclosing in a multi-breaker arrangement

The usual arrangement is to have an autorecloser function SMBRREC per circuit-breaker. They can be in different CB related IEDs or in a common IED.

- A master SMBRREC function is set with *Priority* = *High*.
- A slave SMBRREC function is set with *Priority* = *Low*.

See the application manual for an illustration of typical interconnections.

The two functions can be checked individually by carefully applying START, WAIT, and INHIBIT signals.

It is also possible to verify the two functions together by using CB simulating equipment and two CB circuits. There should be interconnections from the master to the slave function, WFMASTER - WAIT, and UNSUCCL - INHIBIT, as shown in the illustration referred to above.

Restoring equipment

After the tests, restore the equipment to normal or desired state. Check the following items in particular:

1. Check the operation counters.
   Reset the counters to zero, if that is the user's preference. The counter reset function is found on the local HMI under **Main menu/Reset/Reset counters/ AutoRecloser(RREC,79)/ARx**
2. Restore settings that may have been modified for the tests back to normal.
3. Disconnect the test switch, CB simulating arrangement and test circuits.
   Reconnect any links or connection terminals, which may have been opened for the tests.
4. Reset indications, alarms and disturbance recordings.
   Clearing of the disturbance report must be done via the Disturbance Handling in PCM600.

13.10.2.5 Completing the test

Continue to test another function or end the test by changing the *Test mode* setting to *Off*. Restore connections and settings to their original values, if they were changed for testing purposes.

13.10.3 Apparatus control APC

The apparatus control function consists of four types of function blocks, which are connected in a delivery-specific way between bays and to the station level. For that reason, test the total function in a system, that is, either in a complete delivery system as an acceptance test (FAT/SAT) or as parts of that system.

If a block/unblock command is sent from remote to function, while the IED is shut down, this command will not be recognized after the start up, thus the command that was sent prior to the shut down is used. In such cases, where there is a mismatch, the user is advised to make a complete cycle of block/unblock operations to align the statuses.

13.10.4 Interlocking

Prepare the IED for verification of settings as outlined in section "Overview" and section "Preparing for test" in this chapter.

The interlocking function consists of a bay-level part and a station-level part. The interlocking is delivery specific and is realized by bay-to-bay communication over the station bus. For that reason, test the function in a system, that is, either in a complete delivery system as an acceptance test (FAT/SAT) or as parts of that system.

13.10.5 Voltage control VCTR

Prepare the IED for verification of settings as outlined in section "Overview" and section "Preparing for test" in this chapter.

The automatic voltage control for tap changer, single control TR1ATCC is based on a transformer configuration that consists of one tap changer on a single two-winding power transformer.

The automatic voltage control for tap changer, parallel control TR8ATCC, if installed, may be set to operate in Master Follower (MF) mode, or Minimise Circulating Current (MCC) mode. The commissioning tests for each parallel control mode are addressed separately in the following procedure.

Secondary injection of load current (I_L) and secondary bus voltage (UB) equivalent quantities is required during installation and commissioning tests. The test consists mainly of:

1. Increasing or decreasing the injected voltage or current at the analogue inputs of the IED.
2. Checking that the corresponding commands (Lower or Raise) are issued by the voltage control function.

Setting confirmation is an important step for voltage control in the installation and commissioning phase to ensure consistency of power systems base quantities, alarm/blocking conditions and parallel control settings for each transformer control function.

Before starting any test, verify the following settings in PCM600 or the local HMI for TR1ATCC, TR8ATCC and TCMYLTC and TCLYLTC.

- Confirm power system base quantities *I1Base*, *I2Base*, UBase.

Main menu/Settings/Setting Group N/Control/ TransformerVoltageControl(ATCC,90)/VCSx/VCPx/General

and

Main menu/Settings/Setting Group N/Control/ TransformerVoltageControl(ATCC,90)/VCSx

.

- Confirm that the setting for short circuit impedance *Xr2* for TR1ATCC or TR8ATCC is in accordance with transformer data:

- Short circuit impedance, available on the local HMI under **Main menu/ Settings/General settings/Control/ TransformerVoltageControl(ATCC,90)/VCSx/VCPx/Xr2**.

- Confirm that the setting for TCMYLTC or TCLYLTC is in accordance with transformer data:
  - Tap change timeout duration - effectively the maximum transformer tap change time, *tTCTimeout*, available on the local HMI under **Main menu/ Settings/Setting Group N/Control/TransformerTapControl(YLTC, 84)/TCMx/TCLx/tTCTimeout**.
  - Load tap changer pulse duration - required length of pulse from IED to load tap changer, *tPulseDur*, available on the local HMI under **Main menu/Settings/Setting Group N/Control/ TransformerTapControl(YLTC,84)/TCMx/TCLx/tPulseDur**.
  - Transformer tap range, *LowVoltTap* and *HighVoltTap*, available on the local HMI under**Main menu/Settings/General Settings/Control/ TransformerTapControl(YLTC,84)/TCMx/TCLx/LowVoltTap and HighVoltTap**.
  - Load tap changer code type - method for digital feedback of tap position, *CodeType*, available on the local HMI under **Main menu/Settings/ General settings/Control/TransformerTapControl(YLTC,84)/ TCMx/TCLx/CodeType**.

During the installation and commissioning, the behavior of the voltage control functions for different tests may be governed by a parameter group, available on the local HMI under **Main menu/ Settings/General settings/Control/ TransformerVoltageControl(ATCC,90)/VCSx/VCPx**. These parameter settings can cause a Total Block, Automatic Block or Alarm for a variety of system conditions including over and under voltage, over current and tap changer failure. It is important to review these settings and confirm the intended response of the voltage control function for different secondary injection tests.

Terminology

The busbar voltage UB is a shorter notation for the measured voltages Ua, Ub, Uc or Uij, where Uij is the phase-phase voltage, Uij = Ui -Uj, or Ui, where Ui is one single-phase-to-earth voltage.

I_L is a shorter notation for the measured load current; it is to be used instead of the three-phase quantities Ia, Ib, Ic or the two-phase quantities Ii and Ij, or single-phase current Ii.

Also note that for simplicity, the Parameter Setting menu structures included in the following procedure are referred to universally as VCP1, for example, **Main menu/Settings/Setting Group N/**

Control/TransformerVoltageControl(ATCC,90)/VCSx/VCPx/Time/t1 and t2l.

For cases where single-mode voltage control is implemented, the Parameter Setting menu structure includes VCS1 instead of the parallel designator VCP1.

13.10.5.1 Secondary test

The voltage control function performs basic voltage regulation by comparing a calculated load voltage (U_L) against a voltage range defined by setting *UDeadband* (with upper and lower limits U2 and U1 respectively). The calculated load voltage U_L represents the secondary transformer bus voltage UB adjusted for Load drop compensation (LDC) where enabled in settings.

Note that when LDC is disabled, UB equals U_L.

When the load voltage U_L stays within the interval between U1 and U2, no action will be taken.

If U_L < U1 or U_L > U2, a command timer will start, which is constant time or inverse time defined by setting *t1* and *t1Use*. The command timer will operate while the measured voltage stays outside the inner deadband (defined by setting *UDeadbandInner*).

If U_L remains outside of the voltage range defined by *UDeadband* and the command timer expires, the voltage control will execute a raise or lower command to the transformer tap changer. This command sequence will be repeated until U_L is brought back within the inner deadband range.

13.10.5.2 Check the activation of the voltage control operation

1. Confirm *Transformer Tap Control = On* and *Transformer Voltage Control = On*
   - Direct tap change control

   Main menu/Settings/Setting Group N/Control/TransformerTapChanger(YLTC,84)/TCMx/TCLx/Operation
   - Automatic transformer voltage control

   Main menu/Settings/Setting Group N/Control/TransformerVoltageControl(ATCC,90)/VCSx/VCPx/General/Operation
   - Enable Tap Command

Main menu/Settings/General settings/Control/ TransformerTapChanger(YLTC,84)/TCMx/TCLx/EnabTapCmd
While the test set is connected to the IED but no voltage is applied, the voltage control functions will detect an undervoltage condition that may result in an alarm or blocking of the voltage-control operation. These conditions will be shown on the local HMI.

2. Apply the corresponding voltage
   Confirm the analog measuring mode prior to undertaking secondary injection (positive sequence, phase-phase, or phase-earth). This measuring mode is defined in the local HMI under **Main menu/Settings/Setting Group N/ Control/TransformerVoltageControl(ATCC,90)/VCSx/VCPx/General/ MeasMode**
   The application of nominal voltage *USet* according to set *MeasMode* to the IEDs should cause the alarm or blocking condition for undervoltage to reset.

13.10.5.3 Check the normal voltage regulation function

1. Review the settings for *UDeadband* (based on percentage of nominal bus voltage) and calculate the upper (U2) and lower (U1) voltage regulation limits for which a tap change command will be issued.
2. Review the expected time for first (*t1*) and subsequent (*t2*) tap change commands from the voltage control function on the local HMI under **Main menu/Settings/Setting Group N/Control/ TransformerVoltageControl(ATCC,90)/VCSx/VCPx/Time/t1 and t2l**
3. Lower the voltage 1% below U1 and wait for the issue of a Raise command from the voltage control after the expiry of a constant or inverse time delay set by *t1*. Detection of this command will involve locating the allocated binary output for a raise pulse command in the Signal Matrix in PCM600 and monitoring a positive from this output.
4. After the issue of the raise command, return the applied voltage to *USet* (nominal value).
5. Raise the voltage 1% above the upper deadband limit U2 and wait for the issue of a lower command from the voltage control after the expiry of a constant or inverse time delay set by *t1*. Detection of this command will involve locating the allocated binary output for a low pulse command in the Signal Matrix in PCM600 and monitoring a positive from this output.
6. Return the applied voltage to *USet*.

13.10.5.4 Check the undervoltage block function

1. Confirm the setting for *Ublock*, nominally at 80% of rated voltage.
2. Confirm the voltage control function response to an applied voltage below *Ublock*, by reviewing the setting in the local HMI under **Main menu/Settings/ General settings/Control/TransformerVoltageControl(ATCC,90)/VCSx/**

VCPx/UVBk that may cause an alarm, total or automatic block of the voltage control function to be displayed on the local HMI.

3. Apply a voltage slightly below *Ublock* and confirm the response of the voltage control function.

13.10.5.5 Check the upper and lower busbar voltage limit

1. Confirm the settings for *Umin* and *Umax* in the local HMI under **Main menu/Settings/Setting group N/Control/TransformerVoltageControl(ATCC,90)/VCSx/VCPx/Voltage/Umax or Umin**
2. Confirm the voltage control function response to an applied voltage below *Umin* and above *Umax*, by reviewing the settings in the local HMI under **Main menu/Settings/General settings/Control/TransformerVoltageControl(ATCC,90)/VCSx/VCPx/UVPartBk** and **Main menu/General Settings/Control/TransformerVoltageControl/VCSx/VCPx/OVPartBk**. These conditions may cause an alarm, total or automatic block of the voltage control function to be displayed on the local HMI.
3. Decrease the injected voltage slightly below the *Umin* value and check for the corresponding blocking or alarm condition on the local HMI. For an alarm condition, the voltage regulation function is not blocked and a raise command should be issued from the IED.
4. Increase the applied voltage slightly above the *Umax* value and check for the corresponding blocking or alarm condition on the local HMI. For an alarm condition, the voltage regulation function is not blocked and a lower command should be issued from the IED.

13.10.5.6 Check the overcurrent block function

1. Confirm the setting for *Iblock* in the local HMI under **Main menu/Settings/Setting group N/Control/TransformerVoltageControl(ATCC,91)/VCSx/VCPx/TCCtrl/Iblock**
2. Confirm the voltage control function response to an applied current above *Iblock*, by reviewing the settings in the local HMI under **Main menu/Settings/General settings/Control/TransformerVoltageControl(ATCC,91)/VCSx/VCPx/OVPartBk**. This condition may cause an alarm, total or automatic block of the voltage control function to be displayed on the local HMI.
3. Inject a current higher than the *Iblock* setting and confirm the alarm or blocking condition is present on the local HMI. If an automatic or total blocking condition occurs, change the applied secondary voltage and confirm that no tap change commands are issued from the associated binary outputs. This situation can also be confirmed through reviewing the disturbance and service reports on the local HMI.

13.10.5.7 Single transformer

Load drop compensation

1. Confirm that *OperationLDC* is set to *On*.
2. Confirm settings for *Rline* and *Xline*.
3. Calculate the expected load voltage U_L (displayed as a measured value on the local HMI) based on secondary injection of transformer secondary voltage (UB = *USet*) and rated load current (I_L = *I1Base*), in accordance with equation 18.

$$U_L = UB - (Rline + jXline) \cdot I_L$$

(Equation 18)

where:

U_L, I_L = Re(I_L) + jIm(I_L) are complex phase quantities

When all secondary phase-to-earth voltages are available, use the positive-sequence components of voltage and current. By separation of real and imaginary parts:

$$ul,re = ub,re - rline \cdot il,re + xline \cdot il,im$$

(Equation 19)

$$ul,im = ub,im - xline \cdot il,re - rline \cdot il,im$$

(Equation 20)

where:

ub	is the complex value of the busbar voltage
il	is the complex value of the line current (secondary side)
rline	is the value of the line resistance
xline	is the value of the line reactance

For comparison with the set-point value, the modulus of U_L are according to equation 21.

$$|U_L| = \sqrt{(ul,re)^2 + (ul,im)^2}$$

(Equation 21)

4. Inject voltage for UB equal to setting *USet*.
5. Inject current equal to rated current *I2Base*.
6. Confirm on the local HMI that service values for bus voltage and load current are equal to injected quantities.
7. Confirm that the calculated value for load voltage, displayed on the local HMI, is equal to that derived through hand calculations.

8. When setting *OperationLDC* set to *On*, the voltage regulation algorithm uses the calculated value for load voltage as the regulating quantity to compare against *USet* and the voltage deadband limits *UDeadband* and *UDeadbandInner*.
9. While injecting rated current *I2Base* into the IED, inject a quantity for UB that is slightly higher then *USet* + |(*Rline*+j*XLine*)·I_L|. This will ensure that the regulating voltage U_L is higher than *USet*, and hence no tap change command should be issued from the IED.
10. Reduce the injected voltage for UB slightly below *USet* + |(*Rline*+j*XLine*)·I_L| and confirm that the calculated value for load voltage is below *USet* and a tap change command is issued from the IED.

13.10.5.8 Parallel voltage regulation

Master follower voltage regulation

1. For the transformers connected in the parallel group, confirm that *OperationPAR* is set to *MF*.
2. For parallel operation, it is also recommended to confirm for parallel group membership, defined by setting *TnRXOP* in the local HMI under **Main menu/ Settings/Setting group N/Control/TransformerVoltageControl(ATCC, 90)/VCPx/ParCtrl**
   The general parallel arrangement of transformers are defined by setting *TnRXOP* to *On* or *Off*. The following rules are applicable on the settings *T1RXOP – T4RXOP*.
   If IED *T1* and *T2* are connected,
   - *T1RXOP* shall be set to *On* in instance 2 of TR8ATCC,
   - *T2RXOP* shall be set to *On* in instance 3 of TR8ATCC,
   - *T2RXOP* and *T3RXOP* shall be set to *On* in instance 1 of TR8ATCC, and so on.

   The parameter corresponding to the own IED **must not** be set. *T1RXOP* should thus not be set in IED *T1*, *T2RXOP* **not** in IED *T2*, and so on.

3. The lowest transformer number in the parallel group is by default set as the Master – confirm that this is the case by reviewing the setting in the local HMI.
4. Review the settings for *UDeadband* (based on percentage of nominal bus voltage) and calculate the upper (U2) and lower (U1) voltage regulation limits for which a tap change command will be issued from the master transformer in the group.
5. Review the expected time for first (*t1*) and subsequent (*t2*) tap change commands from the master transformer in the local HMI under **Main menu/**

Settings/Setting group N/Control/TransformerVoltageControl(ATCC, 90)/VCSx/VCPx/Time/t1 and t2

6. Apply a voltage 1% below U1 and wait for the issue of a raise command from the voltage control after the expiry of a constant or inverse time delay set by *t1*. Detection of this command will involve locating the allocated binary output for a raise command in the Signal Matrix in PCM600 and monitoring a positive from this output. Confirm the timing of this command correlates with the setting *t1*.
7. After the issue of the raise command, confirm that all follower transformers in the group change tap in accordance with the command issued from the master transformer.
8. Inject a voltage UB for the master transformer that is 1% above the upper deadband limit U2 and wait for the issue of a lower command from the voltage control after the expiry of a constant or inverse time delay set by *t2*.
9. Confirm that all follower transformers in the group change tap in accordance with this command.

Circulating current voltage regulation

This instruction for confirmation of circulating current voltage regulation assumes two transformers in the parallel group. Setting confirmation through secondary injection requires calculation of circulating currents for each transformer based on impedance values and respective compensating factors, and is therefore more complex for greater than two transformers.

1. Confirm that *OperationPAR* is set to *CC* for the transformers in the parallel group.
2. For parallel operation, it is also recommended that settings be confirmed for parallel group membership, governed by setting *TnRXOP* in the local HMI under **Main menu/Settings/Setting group N/Control/ TransformerVoltageControl(ATCC,90)/VCPx/ParCtrl**
   The general parallel arrangement of transformers are defined by setting *TnRXOP* to *On* or *Off*. The following rules are applicable on the settings *T1RXOP* - *T4RXOP*.
   If IED *T1* and *T2* are connected,
   - *T1RXOP* shall be set to *On* in instance 2 of TR8ATCC, and
   - *T2RXOP* shall be set to *On* in instance 1 of TR8ATCC.

   If *T1* - *T3* are available,
   - *T1RXOP* and *T2RXOP* shall be set to *On* in instance 3 of TR8ATCC,
   - *T2RXOP* and *T3RXOP* shall be set to *On* in instance 1 of TR8ATCC and so on.

The parameter corresponding to the own IED **must not** be set. *T1RXOP* should thus **not** be set in IED *T1*, *T2RXOP***not** in IED *T2* and so on.

3. Review the settings for *UDeadband* (based on percentage of nominal bus voltage) and calculate the upper (U2) and lower (U1) voltage regulation limits for which a tap change command will be issued from the master transformer in the group.
4. Review the expected time for first (*t1*) and subsequent (*t2*) tap change commands from the master transformer in the local HMI under **Main menu/Settings/Setting group N/TransformerVoltageControl(ATCC,90)/VCSx/VCPx/Time/t1 and t2**
5. Inject a voltage UB equal to *USet* for each transformer.
6. Inject a load current for Transformer 1 that is equal to rated load current *I2Base* and a load current for Transformer 2 that is equal to 95% of rated load current *I2Base*. This will have the effect of producing a calculated circulating current that flows from HV to LV side for Transformer 1 and LV to HV side for Transformer 2.
7. Confirm that a circulating current is measured on the local HMI that is equal in magnitude to 5% of *I2Base*, with polarity as discussed in step 6.
8. Confirm the settings for C*i* (Compensation Factor) and X*i* (Transformer Short Circuit Impedance). Using these setting values and the measured quantity of circulating current from the local HMI (I*cc_i*), calculate the value for circulating current voltage adjustment U*ci*.

$$Udi = Ci \cdot Icc\_i \cdot Xi$$

(Equation 22)

The voltage regulation algorithm then increases (for transformer *T2*) or decreases (for transformer *T1*) the measured voltage by Udi and compares Ui against the voltage deadband limits U1 and U2 for the purposes of voltage regulation.

$$Ui = UB + Udi$$

(Equation 23)

9. To cause a tap change, the calculated value for circulating current voltage adjustment must offset the injected quantity for bus voltage UB so that Ui is outside the voltage deadband created by setting *UDeadband*. Expressed by equation 24 and equation 25.

$$Udi > U2 - UB$$

(Equation 24)

$$UB = Uset$$ (for the purposes of this test procedure)

(Equation 25)

Therfore:

$$Ci \cdot Icc\_i \cdot Xi > U2 - Uset$$

(Equation 26)

$$|Icc\_i| > \frac{(U2 - Uset)}{(Ci \cdot Xi)}$$

(Equation 27)

10. Using the settings for *USet*, *UDeadband*, C (Compensating factor) and *Xr2* (transformer short circuit impedance) calculate the magnitude of Icc_*i* necessary to cause a tap change command.
11. Inject current equal to *I2Base* for Transformer 1 and (*I2Base* - |Icc_*i*|) for Transformer 2 so that the magnitude of calculated circulating current will cause a raise command to be issued for Transformer 2 and a lower command for Transformer 1. Magnitude and direction of circulating currents measured for each transformer can be observed as service values on the local HMI and raise/lower commands detected from the binary output mapped in the Signal Matrix.

The voltage injection equal to *USet* is required for both transformers during this test.

12. Confirm that a tap change command is issued from the voltage control function to compensate for the circulating current.
13. Injected currents can be reversed such that the direction of calculated circulating currents change polarity, which will cause a lower command for Transformer 2 and a raise command for Transformer 1.

Circulating current limit

1. Confirm that *OperationPAR* is set to *CC* for each transformer in the parallel group.
2. Confirm that *OperCCBlock* is set to *On* for each transformer in the parallel group.
3. Review the setting for *CircCurrLimit*.

4. Review the setting for *CircCurrBk* to confirm whether a circulating current limit will result in an *Alarm* state, *Auto Block* or *Auto&Man Block* of the automatic voltage control for tap changer, for parallel control function TR8ATCC.
5. Inject a voltage UB equal to *USet* for each transformer.
6. Inject a load current for Transformer 1 that is equal to rated load current *I2Base* and a load current for Transformer 2 that is 1% less than (*I2Base* – (*I2Base* · CircCurrLimit))
7. Confirm that the automatic voltage control for tap changer, for parallel control function TR8ATCC responds in accordance with the setting for *CircCurrBk*. Alarm and blocking conditions can be confirmed through interrogation of the event menu or the control menu on the local HMI.

VTmismatch during parallel operation

1. Confirm that *OperationPAR* is set to *MF* for each transformer in the parallel group.
2. Review the setting for *VTmismatch* and *tVTmismatch*.
3. Inject a voltage UB equal to *USet* for Transformer 1 and a voltage less than (*USet* – (*VTmismatch* · *USet*)) for Transformer 2.
4. This condition should result in a *VTmismatch* which will mutually block the operation of the automatic voltage control for tap changer, parallel control function TR8ATCC for all transformers connected in the parallel group, which can be confirmed through interrogation of the local HMI.
5. Confirm that the automatic voltage control for tap changer, parallel control function TR8ATCC responds in accordance with the setting for *CircCurrBk*.

13.10.5.9 Completing the test

Continue to test another function or end the test by changing the *Test mode* setting to *Off*. Restore connections and settings to their original values, if they were changed for testing purposes.

13.10.6 Single command SingleCommand16Signals

For the single command function block, it is necessary to configure the output signal to corresponding binary output of the IED. The operation of the single command function (SingleCommand16Signals) is then checked from the local HMI by applying the commands with *Mode* = *Off*, *Steady* or *Pulse*, and by observing the logic statuses of the corresponding binary output. Command control functions included in the operation of different built-in functions must be tested at the same time as their corresponding functions.

13.11 Scheme communication

13.11.1 Scheme communication logic for distance or overcurrent protection ZCPSCH

Prepare the IED for verification of settings as outlined in section "Overview" and section "Preparing for test" in this chapter.

Check the scheme logic during the secondary injection test of the impedance or overcurrent protection functions.

Activating of the different zones verifies that the CS signal is issued from the intended zones. The CS signal from the independent tripping zone must have a *tSendMin* minimum time.

Check the tripping function by activating the CR and CRG inputs with the overreaching zone used to achieve the CACC signal.

It is sufficient to activate the zones with only one type of fault with the secondary injection.

13.11.1.1 Testing permissive underreaching

Procedure

1. Activate the receive (CR) signal in the IED.
2. Apply healthy normal load conditions to the IED for at least two seconds.
3. Apply a fault condition within the permissive zone.
4. Check that correct trip outputs, external signals, and indications are obtained for the actual type of fault generated.
5. Check that other zones operate according to their zone timers and that the send (CS) signal is obtained only for the zone configured to generate the actual signal.
6. Deactivate the receive (CR) signal in the IED.
7. Check that the trip time complies with the zone timers and that correct trip outputs, external signals, and indications are obtained for the actual type of fault generated.

13.11.1.2 Testing permissive overreaching

Procedure

1. Activate the receive (CR) signal in the IED.
2. Apply healthy normal load conditions to the IED for at least two seconds.
3. Apply a fault condition within the permissive zone.

4. Check that correct trip outputs, external signals, and indication are obtained for the actual type of fault generated.
5. Check that the other zones operate according to their zone timer and that the send (CS) signal is obtained only for the zones that are configured to give the actual signal.
6. Deactivate the IED receive (CR) signal.
7. Apply healthy normal load conditions to the IED for at least two seconds.
8. Apply a fault condition within the permissive zone.
9. Check that trip time complies with the zone timers and that correct trip outputs, external signals, and indications are obtained for the actual type of fault generated.

13.11.1.3 Testing blocking scheme

Procedure

1. Deactivate the receive (CR) signal of the IED.
2. Apply healthy normal load conditions to the IED for at least two seconds.
3. Apply a fault condition within the forward directed zone used for scheme communication tripping.
4. Check that correct trip outputs and external signals are obtained for the type of fault generated and that the operate time complies with the *tCoord* timer (plus relay measuring time).
5. Check that the other zones operate according to their zone times and that a send (CS) signal is only obtained for the reverse zone.
6. Activate the IED receive (CR) signal.
7. Apply a fault condition in the forward directed zone used for scheme communication tripping.
8. Check that the no trip from scheme communication occurs.
9. Check that the trip time from the forward directed zone used for scheme communication tripping complies with the zone timer and that correct trip outputs, external signals, and indications are obtained for the actual type of fault generated.

13.11.1.4 Checking of unblocking logic

Check the unblocking function (if the function is required) when checking the communication scheme.

Command function with continuous unblocking (*Unblock* = *1*)

Procedure

1. Activate the guard input signal (CRG) of the IED.
2. Using the scheme selected, check that a signal accelerated trip (TRIP) is obtained when the guard signal is deactivated.

13.11.1.5 Completing the test

Continue to test another function or end the test by changing the *Test mode* setting to *Off*. Restore connections and settings to their original values, if they were changed for testing purposes.

13.11.2 Current reversal and weak-end infeed logic for distance protection ZCRWPSCH

Prepare the IED for verification of settings as outlined in section "Overview" and section "Preparing for test" in this chapter.

The current reversal logic and the weak-end infeed functions are tested during the secondary-injection test of the impedance or overcurrent protection zones together with the scheme communication logic for the distance protection function ZCPSCH.

13.11.2.1 Current reversal logic

It is possible to check the delay of the CS send signal with *tDelayRev* by changing from a reverse to a forward fault.

By continuously activating the CR input and changing from a reverse to a forward fault, the delay *tDelayRev* can be checked.

Checking of current reversal

The reverse zone timer must not operate before the forward zone fault is applied. The user might need to block the reverse zone timer during testing of current reversal.

The forward zone timer must be set longer than 90ms.

Procedure

1. Activate the receive (CRL) signal.
2. Set the healthy condition to an impedance at 50% of the reach of the reverse zone connected to IRVL.
3. After the start condition is obtained for reverse zone, apply a fault at 50% of the reach of the forward zone connected to WEIBLK1.
4. Check that correct trip outputs and external signals are obtained for the type of fault generated.

The operation time should be about the *tDelayRev* setting longer than the carrier accelerated trip (TRIP) previously recorded for permissive scheme communication.

5. Restore the forward and reverse zone timer to its original setting.

13.11.2.2 Weak end infeed logic

Weak-end infeed logic at permissive schemes

Procedure

1. Check the blocking of the echo with the injection of a CRL signal >40ms after a reverse fault is applied.
2. Measure the duration of the echoed signal by applying a CRL receive signal.
3. Check the trip functions and the voltage level for trip by reducing a phase voltage and applying a CRL receive signal.

Testing conditions

Only one type of fault is sufficient, with the current reversal and weak-end infeed logic for distance protection function ZCRWPSCH. Apply three faults (one in each phase), when the phase segregated scheme communication logic for distance protection function ZC1PPSCH is used. For phase L1-N fault, set these parameters:

Table 20: Phase L1-N parameter values

Phase	I (Amps)	Phase-angle (Deg)	V (Volts)	Phase-angle (Deg)
L1	0	0	Set less than *UPN<*	0
L2	0	240	63	240
L3	0	120	63	120

Change all settings cyclically for other faults (L2-N and L3-N).

Weak-end infeed set for trip

Weak-end infeed set for echo

1. Apply input signals according table 20.
2. Activate the receive (CR) signal.
3. After the IED has operated, turn off the input signals.
4. Check that trip, send signal, and indication are obtained. (note: a 200mS pulse)
5. Apply input signals according table 20.
6. Activate the receive (CR) signal.
7. After the IED has operated turn off the input signals.
8. Check that the send signal is obtained.

13.11.2.3 Completing the test

Continue to test another function or end the test by changing the *Test mode* setting to *Off*. Restore connections and settings to their original values, if they were changed for testing purposes.

13.11.3 Local acceleration logic ZCLCPLAL

Prepare the IED for verification of settings as outlined in section "Overview" and section "Preparing for test" in this chapter.

The logic is checked during the secondary injection test of the impedance measuring zones.

13.11.3.1 Verifying the settings

Procedure

1. Provide the IED with conditions equivalent to normal load for at least two seconds.
2. Deactivate the conditions for accelerated function.
3. Apply a phase-to-earth fault at 100% of line impedance.
4. Check that the fault is tripped with the second zone time delay.
5. Provide the IED with conditions equivalent to normal load for at least two seconds.
6. Activate the condition for accelerated function either by the autorecloser or by the loss-of-load.
7. Apply a phase-to-earth fault at 100% of line impedance.
8. Check that the fault is tripped instantaneously.

13.11.3.2 Completing the test

Continue to test another function or end the test by changing the *Test mode* setting to *Off*. Restore connections and settings to their original values, if they were changed for testing purposes.

13.11.4 Scheme communication logic for residual overcurrent protection ECPSCH

Prepare the IED for verification of settings as outlined in section "Overview" and section "Preparing for test" in this chapter.

Before testing the communication logic for residual overcurrent protection function ECPSCH, the four step residual overcurrent protection function EF4PTOC has to be tested according to the corresponding instruction. Once this is done, continue with the instructions below.

If the current reversal and weak-end infeed logic for earth-fault protection is included, proceed with the testing according to the corresponding instruction after the testing the communication logic for residual overcurrent protection. The current reversal and weak-end-infeed functions shall be tested together with the permissive scheme.

13.11.4.1 Testing the directional comparison logic function

Blocking scheme

Procedure

1. Inject the polarizing voltage 3U0 at 5% of *UBase* (EF4PTOC) where the current is lagging the voltage by 65°.
2. Inject current (65° lagging the voltage) in one phase at about 110% of the set operating current, and switch the current off with the switch.
3. Switch the fault current on and measure the operating time of the communication logic.
   Use the TRIP signal from the configured binary output to stop the timer.
4. Compare the measured time with the set value *tCoord*.
5. Activate the CR binary input.
6. Check that the CRL output is activated when the CR input is activated.
7. Switch the fault current on (110% of the set operating current) and wait longer than the set value *tCoord*.

   No TRIP signal should appear.

8. Switch the fault current off.
9. Reset the CR binary input.
10. Activate the BLOCK digital input.
11. Switch the fault current on (110% of the set operating current) and wait for a period longer than the set value *tCoord*.

    No TRIP signal should appear.

12. Switch the fault current and the polarizing voltage off.
13. Reset the BLOCK digital input.

Permissive scheme

Procedure

1. Inject the polarizing voltage 3U0, which is 5% of *UBase* (EF4PTOC) where the current is lagging the voltage by 65°.
2. Inject current (65° lagging the voltage) into one phase at about 110% of the set operating current, and switch the current off with the switch.
3. Switch the fault current on, (110% of the set operating current) and wait longer than the set value *tCoord*.

No TRIP signal should appear, and the CS binary output should be activated.

4. Switch the fault current off.
5. Activate the CR binary input.
6. Switch the fault current on (110% of the set operating current) and measure the operating time of the ECPSCH logic.
   Use the TRIP signal from the configured binary output to stop the timer.
7. Compare the measured time with the setting for *tCoord*.
8. Activate the BLOCK digital input.
9. Switch the fault current on (110% of the set operating current) and wait for a period longer than the set value *tCoord*.

No TRIP signal should appear.

10. Switch the fault current and the polarizing voltage off.
11. Reset the CR binary input and the BLOCK digital input.

13.11.4.2 Completing the test

Continue to test another function or end the test by changing the *Test mode* setting to *Off*. Restore connections and settings to their original values, if they were changed for testing purposes.

13.11.5 Current reversal and weak-end infeed logic for residual overcurrent protection ECRWPSCH

Prepare the IED for verification of settings as outlined in section "Overview" and section "Preparing for test" in this chapter.

First, test the four step residual overcurrent protection function EF4PTOC and then the current reversal and weak-end infeed logic according to the corresponding instructions. Then continue with the instructions below.

13.11.5.1 Testing the current reversal logic

1. Inject the polarizing voltage 3U0 to 5% of *UBase* (EF4PTOC) and the phase angle between voltage and current to 155°, the current leading the voltage.
2. Inject current (155° leading the voltage) in one phase to about 110% of the set operating current of the four step residual overcurrent protection (*IN>Dir*).
3. Check that the IRVL output is activated after the set time (*tPickUpRev*).
4. Abruptly reverse the current to 65° lagging the voltage, to operate the forward directional element.
5. Check that the IRVL output still is activated after the reversal with a time delay that complies with the setting (*tDelayRev*).
6. Switch off the polarizing voltage and the current.

13.11.5.2 Testing the weak-end infeed logic

If setting *WEI = Echo*

1. Inject the polarizing voltage 3U0 to 5% of *UBase* and the phase angle between voltage and current to 155°, the current leading the voltage.
2. Inject current (155° leading the voltage) in one phase to about 110% of the setting operating current (*IN>Dir*).
3. Activate the CRL binary input.

No ECHO and CS should appear.

4. Abruptly reverse the current to 65° lagging the voltage, to operate the forward directional element.

No ECHO and CS should appear.

5. Switch off the current and check that the ECHO and CS appear on the corresponding binary output or on the local HMI, about 200ms after resetting the directional element.
6. Switch off the CRL binary input.
7. Activate the BLOCK binary input.
8. Activate the CRL binary input.

No ECHO and CS should appear.

9. Switch off the polarizing voltage and reset the BLOCK and CRL binary input.

If setting *WEI = Echo & Trip*

Procedure

1. Inject the polarizing voltage 3U0 to about 90% of the setting (*3U0*) operating voltage.
2. Activate the CRL binary input.

No ECHO, CS and TRWEI outputs should appear.

3. Increase the injected voltage to about 110% of the setting (3U0) operating voltage.
4. Activate the CRL binary input.
5. Check that the ECHO, CS and TRWEI appear on the corresponding binary output or on the local HMI.
6. Reset the CRL binary input.
7. Activate the BLOCK binary input.
8. Activate the CRL binary input.

No ECHO, CS and TRWEI outputs should appear.

9. Reset the CRL and BLOCK binary input.
10. Inject the polarizing voltage 3U0 to about 110% of the setting (*3U0*) and adjust the phase angle between the voltage and current to 155°, the current leading the voltage.
11. Inject current (155° leading the voltage) in one phase to about 110% of the setting operating current (*IN>Dir*).
12. Activate the CRL binary input.

No ECHO, CS and TRWEI should appear.

13. Abruptly reverse the current to 65° lagging the voltage, to operate the forward directional element.

No ECHO, CS and TRWEI should appear.

14. Switch the current off and check that the ECHO, CS and TRWEI appear on the corresponding binary output or on the local HMI, about 200ms after resetting the directional element.
15. Switch the polarizing voltage off and reset the CRL binary input.

13.11.5.3 Completing the test

Continue to test another function or end the test by changing the *Test mode* setting to *Off*. Restore connections and settings to their original values, if they were changed for testing purposes.

13.12 Logic

13.12.1 Tripping logic SMPPTRC

Prepare the IED for verification of settings as outlined in section "Overview" and section "Preparing for test" in this chapter.

This function is functionality tested together with other protection functions (line differential protection,earth-fault overcurrent protection, and so on) within the IED. It is recommended that the function is tested together with the autorecloser function, when built into the IED or when a separate external unit is used for reclosing purposes. The instances of SMPPTRC are identical except for the name of the function block SMPPTRC. The testing is preferably done in conjunction with the protection system and autoreclosing function.

13.12.1.1 Three phase operating mode

1. Check that *AutoLock* and *TripLockout* are both set to *Off*.
2. Initiate a three-phase fault
   An adequate time interval between the faults should be considered, to overcome a reclaim time caused by the possible activation of the Autorecloser function SMBRREC. The function must issue a three-phase trip in all cases, when trip is initiated by any protection or some other built-in or external function. The following functional output signals must always appear simultaneously: TRIP, TRL1, TRL2, TRL3 and TR3P.

13.12.1.2 1ph/3ph operating mode

In addition to various other tests, the following tests should be performed. They depend on the complete configuration of an IED:

Procedure

1. Make sure that *TripLockout* and *AutoLock* are both set to *Off*.
2. Initiate different single-phase-to-earth faults one at a time.
   Single-phase tripping will only be allowed when an autoreclose attempt will follow. The autorecloser function SMBRREC has the functionality such as the long trip time, CB ready and so on, which can prevent a proper single-phase tripping and autoreclose. To by-pass this problem the fault initiation

should be with a test set and with the autoreclose in full service with a test set connected to the distance protection function. Consider using an adequate time interval between faults, to overcome a reclaim time of which is activated by SMBRREC. Only a single-phase trip should occur for each separate fault and only one of the trip outputs (TRLn) should be activated at a time. Functional outputs TRIP and TR1P should be active during each fault. No other outputs should be active.

3. Initiate different phase-to-phase and three-phase faults.
   Consider using an adequate time interval between faults, to overcome a reclaim time, which is activated by SMBRREC. A three-phase trip should occur for each separate fault and all of the trips. Functional outputs TRIP, all TRLn and TR3P should be active at each fault.

   No other outputs should be active.

4. Initiate a single-phase-to-earth fault and switch it off immediately when the trip signal is issued for the corresponding phase. Initiate the same fault once again within the reclaim time of the used SMBRREC.
   A single-phase fault shall be given at the first fault. A three-phase trip must be initiated for the second fault. Check that the corresponding trip signals appear after both faults. Functional outputs TRIP, TRLn and TR1P should be active during first fault. No other outputs should be active. Functional outputs TRIP, all TRLn and TR3P should be active during second fault.
5. Initiate a single phase-to-earth fault and switch it off immediately when the trip signal is issued for the corresponding phase. Initiate the second single phase-to-earth fault in one of the remaining phases within the time interval, shorter than *tEvolvingFault* (default setting 2.0s) and shorter than the dead-time of SMBRREC, when included in the protection scheme.
   Check that the second trip is a three-phase trip and that a three-phase autoreclosing attempt is given after the three-phase dead time. Functional outputs TRIP, TRLn and TR1P should be active during the first fault. No other outputs should be active. Functional outputs TRIP, all TRLn and TR3P should be active during second fault.

13.12.1.3 1ph/2ph/3ph operating mode

In addition to other tests, the following tests, which depend on the complete configuration of an IED, should be carried out.

Procedure

1. Make sure that *AutoLock* and *TripLockout* are both set to *Off*.
2. Initiate different single-phase-to-earth faults one at a time.
   Take an adequate time interval between faults into consideration, to overcome a reclaim time, which is activated by the autorecloser function SMBRREC. Only a single-phase trip should occur for each separate fault and only one of

the trip outputs (TRLn) should be activated at a time. Functional outputs TRIP and TR1P should be active at each fault. No other outputs should be active.

3. Initiate different phase-to-phase faults one at a time.
   Take an adequate time interval between faults into consideration, to overcome a reclaim time which is activated by SMBRREC. Only a two-phase trip should occur for each separate fault and only corresponding two trip outputs (TRLn) should be activated at a time. Functional outputs TRIP and TR2P should be active at each fault. No other outputs should be active.
4. Initiate a three-phase fault.
   Take an adequate time interval between faults into consideration, to overcome a reclaim time, which may be activated by SMBRREC. Only a three-phase trip should occur for the fault and all trip outputs (TRLn) should be activated at the same time. Functional outputs TRIP and TR3P should be active at each fault. No other outputs should be active.
5. Initiate a single-phase-to-earth fault and switch it off immediately when the trip signal is issued for the corresponding phase. Initiate the same fault once again within the reclaim time of the used SMBRREC.
   A single-phase fault shall be given at the first fault. A three-phase trip must be initiated for the second fault. Check that the corresponding trip signals appear after both faults. Functional outputs TRIP, TRLn and TR1P should be active during first fault. No other outputs should be active. Functional outputs TRIP, all TRLn and TR3P should be active during second fault.
6. Initiate a single-phase-to-earth fault and switch it off immediately when the trip signal is generated for the corresponding phase. Initiate the second single-phase-to-earth fault in one of the remaining phases within the time interval, shorter than *tEvolvingFault* (default setting 2.0s) and shorter than the dead-time of SMBRREC, when included in the protection scheme.
   Check that the second trip is a three-phase trip and that a three-phase autoreclosing attempt is given after the three-phase dead time. Functional outputs TRIP, TRLn and TR1P should be active during first fault. No other outputs should be active. Functional outputs TRIP, all TRLn and TR3P should be active during second fault.
7. Initiate a phase-to-phase fault and switch it off immediately when the trip signal is issued for the corresponding two phases. Initiate a second phase-to-phase fault between two other phases within the time interval, shorter than*tEvolvingFault* (default setting 2.0s).
   Check, that the output signals, issued for the first fault, correspond to a two-trip for included phases. The output signals generated by the second fault must correspond to the three-phase tripping action.

13.12.1.4 Circuit breaker lockout

The following tests should be carried out when the built-in lockout function is used in addition to possible other tests, which depends on the complete configuration of an IED.

1. Check that *AutoLock* and *TripLockout* are both set to *Off*.
2. Activate shortly the set lockout (SETLKOUT) signal in the IED.
3. Check that the circuit breaker lockout (CLLKOUT) signal is set.
4. Activate shortly thereafter, the reset lockout (RSTLKOUT) signal in the IED.
5. Check that the circuit breaker lockout (CLLKOUT) signal is reset.
6. Initiate a three-phase fault.
   A three-phase trip should occur and all trip outputs TRL1, TRL2, TRL3 should be activated. Functional outputs TRIP and TR3P should be active at each fault. The output CLLKOUT should not be set.
7. Activate the automatic lockout function, set *AutoLock* = *On* and repeat
   Beside the TRIP outputs, CLLKOUT should be set.
8. Reset the lockout signal by shortly thereafter activating the reset lockout (RSTLKOUT) signal.
9. Activate the trip signal lockout function, set *TripLockout* = *On* and repeat.
   All trip outputs (TRL1, TRL2, TRL3) and functional outputs TRIP and TR3P must be active and stay active after each fault, CLLKOUT should be set.
10. Repeat.
    All functional outputs should reset.
11. Deactivate the TRIP signal lockout function, set *TripLockout* = *Off* and the automatic lockout function, set *AutoLock* = *Off*.

13.12.1.5 Completing the test

Continue to test another function or end the test by changing the *Test mode* setting to *Off*. Restore connections and settings to their original values, if they were changed for testing purposes.

13.13 Monitoring

13.13.1 Event counter CNTGGIO

The event counter function CNTGGIO can be tested by connecting a binary input to the counter under test and from outside apply pulses to the counter. The speed of pulses must not exceed 10 per second. Normally the counter will be tested in connection with tests on the function that the counter is connected to, such as trip logic. When configured, test it together with the function that operates it. Trig the function and check that the counter result is the same the number of operations.

13.13.2 Event function EVENT

Prepare the IED for verification of settings as outlined in section "Overview" and section "Preparing for test" in this chapter.

During testing, the IED can be set when in test mode from PST. The functionality of the event reporting during test mode is set in the Parameter Setting tool in PCM600.

- Use event masks
- Report no events
- Report all events

In test mode, individual event blocks can be blocked from PCM600.

Individually, event blocks can also be blocked from the local HMI under

Main menu/Test/Function test modes/Monitoring/EventCounter(GGIO)/CNTx

13.13.3 Fault locator LMBRFLO

Prepare the IED for verification of settings as outlined in section "Overview" and section "Preparing for test" in this chapter.

The fault locator function LMBRFLO depends on other functions to work properly, that is, phase selection information from distance protection function and analog information supplied by the trip value recorder function. Check that proper binary start and phase selection signals are connected and voltage and current signals are configured (parameter settings).

The result is displayed on the local HMI or via PCM600. Distances to faults for the last 100 recorded disturbances can be found on the local HMI under **Main menu/ Disturbance Records/Disturbance #n(n = 1–100)/General Information**

If PCM600 is used, the result is displayed on the recording list after upload, including loop selection information.

Table 21: Test settings

Parameter	Condition
I	Higher than 30% I_r
Healthy conditions	U = 63,5 V, I = 0 A & ZF = 0°
Impedance |Z|	Test point Note: • $Z_x \leq$ (X0 + 2 · X1)/3 For single-phase faults • $Z_x \leq$ X1 For three and two phase faults • $Z_x \leq$ (X0 + 2 · X1 XM)/3 For single-phase fault with mutual zero-sequence current
Impedance angle ZΦ	Test angle • ZΦ arctan[(X0 + 2 · X1) / (R0 + 2R1)] For single-phase faults • ZΦ arctan(X1/R1) For two-phase faults

13.13.3.1 Measuring the operate limit

Procedure

1. Set the test point (|Z| fault impedance and ZΦ impedance phase angle) for a condition that meets the requirements in table 21.
2. Subject the IED to healthy normal load conditions for at least two seconds.
3. Apply a fault condition.
   Check that the distance-to-fault value displayed on the HMI complies with the following equations (the error should be less than five percent):

$$p = \frac{Z_x}{X1} \cdot 100$$

(Equation 28)

in % for two- and three-phase faults

$$p = \frac{3 \cdot Z_x}{X0 + 2 \cdot X1} \cdot 100$$

(Equation 29)

in % for single-phase-to-earth faults

$$p = \frac{3 \cdot Z_x}{X0 + 2 \cdot X1 \pm XM} \cdot 100$$

(Equation 30)

in % for single-phase-to-earth faults with mutual zero sequence current.

Where:

p = the expected value of a distance to fault in percent

Z_x = set test point on the test set

X0 = set zero-sequence reactance of a line

X1 = set positive-sequence reactance of a line

XM = set mutual zero-sequence impedance of a line

13.13.3.2 Completing the test

Continue to test another function or end the test by changing the *Test mode* setting to *Off*. Restore connections and settings to their original values, if they were changed for testing purposes.

13.14 Metering

13.14.1 Pulse counter PCGGIO

The test of Pulse counter function (PCGGIO) requires the Parameter Setting tool in PCM600 or an appropriate connection to the local HMI with the necessary functionality. A known number of pulses with different frequencies are connected

to the pulse counter input. The test should be performed with settings *Operation* = *On* or *Operation* = *Off* and the function blocked or unblocked. The pulse counter value is then checked in PCM600 or on the local HMI.

13.15 Station communication

13.15.1 Multiple command and transmit MultiCmd/MultiTransm

The multiple command and transmit function (MultiCmd/MultiTransm) is only applicable for horizontal communication.

Test of the multiple command function block and multiple transmit is recommended to be performed in a system, that is, either in a complete delivery system as an acceptance test (FAT/SAT) or as parts of that system, because the command function blocks are connected in a delivery-specific way between bays and the station level and transmit.

Command and transmit function blocks included in the operation of different built-in functions must be tested at the same time as their corresponding functions.

13.16 Remote communication

13.16.1 Binary signal transfer BinSignReceive, BinSignTransm

Prepare the IED for verification of settings as outlined in section "Overview" and section "Preparing for test" in this chapter.

To perform a test of Binary signal transfer function (BinSignReceive/BinSignTransm), the hardware (LDCM) and binary input and output signals to transfer must be configured as required by the application.

There are two types of internal self supervision of BinSignReceive/BinSignTransm

- The I/O-circuit board is supervised as an I/O module. For example it generates FAIL if the board is not inserted. I/O-modules not configured are not supervised.
- The communication is supervised and the signal COMFAIL is generated if a communication error is detected.

Status for inputs and outputs as well as self-supervision status are available from the local HMI under

- Self-supervision status: **Main menu/Diagnostics/Internal events**
- Status for inputs and outputs: **Main menu/Test/Function status**, browse to the function group of interest.
- Remote communication related signals: **Main menu/Test/Function status/Communication/Remote communication**

Test the correct functionality by simulating different kind of faults. Also check that sent and received data is correctly transmitted and read.

A test connection is shown in figure 63. A binary input signal (BI) at End1 is configured to be transferred through the communication link to End2. At End2 the received signal is configured to control a binary output (BO). Check at End2 that the BI signal is received and the BO operates.

Repeat the test for all the signals configured to be transmitted over the communication link.

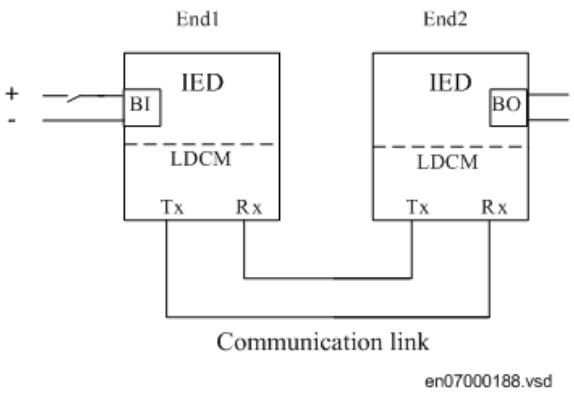

Figure 63: Test of RTC with I/O

Section 14 Primary injection testing

About this chapter

This chapter describes tests with primary current through the protected zone to determine that connections and settings are correct.

14.1 Primary injection testing

Whenever it becomes necessary to work on primary equipment, it is essential that all the necessary switching, locking, earthing and safety procedures are observed and obeyed in a rigid and formalized manner. Operating and testing procedures should be strictly followed in order to avoid exposure to the substation equipment that has not been properly de-energized.

A test with primary current through the protected zone is usually a final check that the current circuits are correctly connected to the IED protection scheme. It is important to have an appropriate source, which is able to inject sufficient current in the primary circuit in order to distinguish between noise and real injected current. Therefore it is recommended that the injection current should be at least 10% of rated CT primary current.

14.1.1 Voltage control VCTR

14.1.1.1 Load drop compensation function, LDC

The load drop compensation function can be tested directly with operational currents, that is, with the power transformer in service and loaded.

When the system is carrying load there will be a difference between the busbar voltage (UB) and the voltage at the load point (UL). This difference is load dependent and can be compensated by the VCTR function.

The load current is fed into the VCTR function where parameters corresponding to the line data for resistance and inductance are set. The voltage drop calculated by the LDC will be proportional to the voltage drop in the system up to the load point.

In the IED this voltage will be subtracted from the measured busbar voltage (UB) and the result, corresponding to the voltage at the load point (UL) will be presented

to the VCTR function for the purposes of voltage regulation. This voltage will be lower (if resitive or inductive load current is applied) than the Uset voltage and VCTR will increase the voltage in order to achieve the correct system voltage at the load point.

Procedure

1. Confirm that the LDC function is set to *On* in the local HMI under **Main menu/Settings/Setting group N/Control/ TransformerVoltageControl(ATCC,90)/VCSx/VCPx/LDC/ OperationLDC**
2. Set (or confirm settings for) the line data (RL + j XL) to the load point in the local HMI under **Main menu/Settings/Setting group N/Control/ TransformerVoltageControl(ATCC,90)/VCSx/VCPx/LDC/RLine and XLine**
3. Check the position of the tap changer.
4. Read the bus and load voltage from the local HMI under **Main menu/ Control/Commands/TransformerVoltageControl(ATCC,90)/VCSx/ VCPx**. Note the values and the difference. The voltage at the busbar will be the system voltage corresponding to Uset. At load point it will be lower than the system voltage.
5. Set R and XL for the LDC to 0 (Zero).
6. Check the bus and load voltage in the local HMI and confirm that both are higher than the first readings. At load point it will be the system voltage and at the busbar the system voltage increased with the line voltage drop. VCTR shall have also operated during these setting changes.

14.1.1.2 Testing the LDC function

Procedure

1. Confirm the settings in the Parameter Setting tool for *USet* and *UDeadband*
2. Set *Rline* and *Xline* for the LDC to *Zero*.
3. Manually operate the tap changer so that the voltage at the transformer (UB) corresponds to the regulating value *USet*.
   Check that neither the raise command nor the lower command are operating. This can be confirmed by checking the signals from the configured binary outputs and the event report on the local HMI. The test of the LDC should be carried out with a single current at one time from the main current transformers in L1 and L3 phase.
   3.1. When measuring the current from the L1 phase, the main CT in L3 phase must have its secondary winding short circuited and the cables to the IED disconnected.
   3.2. When measuring the current from the L3 phase, the main current transformer in L1 phase must have its secondary winding short-circuited and the cables to the IED disconnected.
4. Modify the connections according to step a above.

5. Increase slightly the setting *USet* so that the RAISE output is on the verge of activation (that is, just below the measured value for bus voltage).
6. Set *Rline* and *Xline* to values for the maximum line impedance to the load point. The RAISE output should activate when either *Rline* or *Xline* will be set to the maximum value. The operation can be checked at the corresponding binary output and in the event report. If the RAISE output does not activate reset both *Rline* and *Xline* to *Zero* and set *USet* to a little lower value until the lower circuit is on the verge of operation.
   If the LOWER output activates when either *Rline* or *Xline* have a high setting the current circuits of the L1 phase are incorrect and must be reversed. Incorrect current polarity may be an issue with physical wiring or the current direction convention selected for the CT analogue input as part of the setting in the Parameter Setting tool. The operation can be checked at the corresponding binary output and in the event report.
7. Restore the original connections at the CT in phase L1.
8. Modify the connections according to step b.
9. Increase slightly the setting *USet* so that the RAISE output is on the verge of activation (that is, just below the measured value for bus voltage (UB)).
10. Set *Rline* and *Xline* to values for the maximum line impedance to the load point. The RAISE output should activate when either *Rline* or *Xline* will be set to the maximum value. The operation can be checked at the corresponding binary output and in the event report. If the RAISE output does not activate reset both *Rline* and *Xline* to *Zero* and set *USet* to a little lower value until the lower circuit is on the verge of operation.
    If the LOWER output activates when either *Rline* or *Xline* have a high setting the current circuits of the L1 phase are incorrect and must be reversed. Incorrect current polarity may be an issue with physical wiring or the current direction convention selected for the CT analogue input as part of the setting in the Parameter Setting tool. The operation can be checked at the corresponding binary output and in the event report.
11. Retain the settings for *Rline* and *Xline* to values as the maximum line impedance to the load point.
12. Decrease slowly the setting of *USet* until the lower circuit is on the verge of operation (that is, just above the calculated value for load (UL)).
13. Reduce the setting for *XLine* to *Zero* so that the lower circuit operates.
    If the operation of Raise and Lower is inverted (Lower instead of Raise and Raise instead Lower) the current connections have to be reversed in the same way as for the tests of the Raise component of the voltage regulation with LDC.
14. Modify the CT connections according to (b) and undertake the same test for the “Lower” of the tap changer with LDC (repeating steps 11 to 13).
15. Restore settings for *Uset*, *RLine* and *XLine* to normal in service values.
16. Restore the original connections at the CT in phase L3.
17. After these tests, the single mode voltage control function in the IED can be taken in to service.

14.1.1.3 Voltage control of Parallel Transformers

Parallel transformer voltage control can be achieved through two methods, Minimum Circulating Current (MCC – refer to section "Minimum Circulating Current (MCC) method") and Master Follower (MF – refer to section "Master Follower (MF) method").

Parallel transformer control can be achieved via:

- a single IED with application configuration for the necessary data transfer, for up to four transformers, or
- multiple IEDs (with up to 8 VCTR functions in total) communicating via Goose messages on station bus IEC 61850-8-1

The parallel control functions can be tested directly with operational currents, that is, with the power transformer in service and loaded.

14.1.1.4 Minimum Circulating Current (MCC) method

The method is used when two or more transformers are to be parallel controlled. A maximum of four transformers can be controlled simultaneously.

To use this method, each transformer protection IED must be connected to the station communication bus, to exchange data. The following test procedure will assume that the necessary pre-configuration in the Parameter Setting tool and the Signal Matrix tool has occurred to enable data exchange between IEDs or between instances of voltage control in the same IED.

Procedure

1. Confirm or set the correct *USet* and *UDeadband* in service values.
2. Set the correct overcurrent blocking level (*Iblock*) in service value.
3. Set the circulating current blocking (*OperCCBlock*) to *On*, and the correct settings for circulating current limit (*CircCurLimit*) and time delay for circulating current blocking (*tCircCurr*) in service value.
4. Set *Rline* and *Xline* to *Zero*.
5. For parallel operation, it is also recommended that settings are confirmed for parallel group membership, governed by the *TnRXOP* setting in the Parameter Setting tool under **Main menu/Settings/Setting group N/Control/ TransformerVoltageControl(ATCC,90)/VCPx/ParCtrl**
   In the Parameter Setting, the general parallel arrangement of transformers are defined by setting *TnRXOP* to *On* or *Off*.The following rules are applicable on the settings *T1RXOP* - *T4RXOP*.
   If IED T1 and T2 are connected,
   - *T1RXOP* shall be set to *On* in instance 2 of TR8ATCC, and
   - *T2RXOP* shall be set to *On* in instance 1 of TR8ATCC.

   If T1 - T3 are available

- *T1RXOP* and *T2RXOP* shall be set to *On* in instance 3 of TR8ATCC
- *T2RXOP* and *T3RXOP* shall be set to *On* in instance 1 of TR8ATCC and so on.

The parameter corresponding to the own IED must not be set. *T1RXOP* should thus not be set in IED T1, *T2RXOP* not in IED T2, and so on.

6. Set the parallel operation (*OperationPAR*) to *Off*.
7. Set the control mode, for each transformer in the parallel control group, to *Manual* in the local HMI for that IED.
8. Undertaking switching operations to connect all transformers to the same bus on the secondary side.
9. Manually execute RAISE commands from the local HMI to step up the tap changer for transformer T1, two steps above the setting for the other transformers in the parallel group.
10. Change the setting of *USet* in each of the remaining transformers to correspond to the manually set busbar voltage being measured by T1, which can be located on the local HMI under **Main menu/Control/Command/ TansformerVoltageControl(ATCC,90)/VCSx/VCPx**
11. Set in all the parallel connected transformers the parameter *OperationPAR* to *CC*.
12. On the lcoal HMI, set the control mode to *Automatic* for all transformers.
13. For transformer T1 adjust the parameter *Comp* in the local HMI under **Main menu/Settings/Setting group N/Control/ TransformerVoltageControl(ATCC,90)/VCPx/ParCtrl/Comp** so that the LOWER output is activated due to circulating current, based on guidelines below.

Comp is a setting for circulating current Compensating Factor, and it is effectively a multiplier value to change the sensitivity of the voltage regulation function to measured values of circulating current. A nominal value of *200* for *Comp* should be appropriate to achieve sensitive voltage regulation. Values less may lead to a normal state where tap changers for parallel transformers are well out of step, and values significantly higher will cause over sensitivity in the voltage control function and tap changer hunting behavior.
It is an important outcome of the testing process that the compensating factor is checked for each transformer to ensure sensitive but stable operation for circulating currents.
Example of *Comp* behavior
If there are three transformers connected in parallel, and the tap changer of transformer T1 lies two steps over the tap changer of T2 and T3, the circulating current detected by the VCTR for T1 will be the sum (with opposite sign) of the

current measured at T2 and T3. The currents measured at T2 and T3 will ideally be about the same values.
If the voltage is close to the upper limit of the *UDeadband*, the tap changer of T1 will try to decrease the controlled voltage. In the opposite case, that is, the voltage is close to the lower limit of *UDeadband*, the tap changer at T1 will not try to decrease the controlled voltage.
The tap changer for T2 and T3 will not operate due to the fact that the detected circulating current will be half of the current detected at T1.
The setting of the parameter *Comp* then might need to be increased a little.
At least one tap changer step difference between the different transformers should be allowed in order to avoid the tap changers to operate too often. If the allowed difference is for example two steps, the tap changer shall be stepped up three steps when setting the parameter *Comp*. This applies to all the VCTR in the same group.

14. The setting of the parameter *Comp* at T2 and T3 will be carried out in the same manner as at T1. According to the described procedure when the tap changer of one transformer lies two steps above the others, it shall automatically step down. When there are only two transformers in the group either shall one step down or the other step up depending on the voltage level at the VCTR.
15. Before placing the VCTR into service, confirm the correct settings of *USet*, *UDeadband*, the blocking settings for overcurrent, undervoltage and high circulating currents, and the compensating parameters *Rline* and *Xline*.
Also confirm the settings in the Signal Matrix for binary RAISE and LOWER outputs in conjunction with the basic CET configuration for Goose messages between parallel transformer control functions.
16. Ensure that the automatic control mode is set for each transformer from the IED and that *OperationPAR* is set to *CC*.

14.1.1.5 Master Follower (MF) method

Master follower method requires a Master to be nominated in a parallel group, that is responsible for measuring secondary bus voltage, and executing commands to raise and lower tap changers, that are repeated by Follower transformers in the group.

Procedure

1. Confirm or set *USet* and *UDeadband* to the correct in the service values.
2. Set the correct overcurrent blocking level (*IBlock*) in the service value.
3. Set *Rline* and *Xline* to *Zero*.
4. Confirm the setting of *MFMode* as *Follow Tap* or *Follow Cmd*. If this setting is *Follow Tap*, all Follower transformers shall match the actual tap setting of the Master, while *Follow Cmd* requires that Follower transformers follow the

RAISE and LOWER commands executed by the Master in the local HMI under **Main menu/Settings/General settings/Control/ TransformerVoltageControl(ATCC,90)/VCPx/MFMode**

Note that the maximum difference in tap positions for parallel transformers will be determined by the setting in the Parameter Setting tool under **Main menu/Settings/Setting group N/Control/TransformerVoltageControl(ATCC,90)/ VCPx/ParCtrl/MFPosDiffLim** and that tap differences exceeding that setting can produce system alarms or blocking of the VCTR.

5. For parallel operation, it is also recommended to confirm settings for parallel group membership, of the setting *TnRXOP* in the Parameter Setting tool under **Main menu/Settings/Setting group N/Control/ TransformerVoltageControl(ATCC,90)/VCPx/ParCtrl**
   In the Parameter Setting tool, the general parallel arrangement of transformers are defined by setting *TnRXOP* to *On* or *Off*. The following rules are applicable on the settings *T1RXOP* - *T4RXOP*.
   If terminal T1 and T2 are connected,
   - *T1RXOP* shall be set to *On* in instance 2 of TR8ATCC, and
   - *T2RXOP* shall be set to *On* in instance 1 of TR8ATCC.

   If T1 - T3 are available,
   - *T1RXOP* and *T2RXOP* shall be set to *On* in instance 3 of TR8ATCC, and
   - *T2RXOP* and *T3RXOP* shall be set to *On* in instance 1 of TR8ATCC, and so on.

   The parameter corresponding to the own IED must not be set. *T1RXOP* should thus not be set in IED T1, *T2RXOP* not in IED T2, and so on.

6. Set the parallel operation (*OperationPAR*) to *Off* for each transformer.
7. On the local HMI, set the control mode to Manual for each transformer in the parallel control group.
8. Undertaking switching operations to connect all transformers to the same bus on the secondary side.
9. Set *OperationPAR* to *MF* for all transformers in the parallel group and confirm that the lowest transformer number in the group is set as Master. Allow the issue of RAISE and LOWER commands so that the secondary bus voltage stabilizes at *USet*.
10. Change *USet* in the Master transformer T1 so that it is 1% below the measured bus voltage value on the local HMI and set all transformers to automatic control mode using the local HMI.
11. The Master in the parallel group will issue a LOWER command after time delay *t1*, which will also be repeated by the Follower transformers in the group.
12. Return *USet* for T1 to its normal in the service value.

13. Using the local HMI, set Transformer 2 to Master of the parallel group and T1 to Follower (in that order) and repeat steps 9 to 11. Undertake this same test by setting each Transformer in turn to Master.
14. Note that voltage regulation will be mutually blocked if no transformer is set to Master in the parallel group. To confirm this function, set T1 as Master in the parallel group and allow automatic voltage regulation to occur in a way that the measured bus voltage is stable around *USet*. Without allocating a new Master, set T1 to Follower and note the Automatic block state on the local HMI for all parallel transformers.
15. Restore T1 to Master of the parallel transformer group and ensure that control mode for each transformer is Automatic, *OperationPAR* is set to *MF* and settings for *USet* are restored to normal in the service values.

14.1.1.6 Completing the test

Continue to test another function or end the test by changing the *Test mode* setting to *Off*. Restore connections and settings to their original values, if they were changed for testing purposes.

Section 15 Commissioning and maintenance of the fault clearing system

About this chapter

This chapter discusses maintenance tests and other periodic maintenance measures.

15.1 Installation and commissioning

The protection IED is in an on-guard situation where the IED can be inactive for several years and then suddenly be required to operate within fractions of a second. This means that maintenance testing with certain time intervals should be performed to detect failures of the protection IED or the surrounding circuits. This is a complement to the advanced self supervision in the modern protection IED.

IEDs are not expected to deteriorate with usage but extreme conditions, such as mechanical shocks, AC or DC transients, high ambient temperatures, and high air humidity always have a certain likelihood of causing damages.

Delivered equipment undergoes extensive testing and quality control in the ABB manufacturing program. All types of IEDs and their integral components have been subject to extensive laboratory testing during the development and design work. Prior to series production of a specific IED, it is type tested according to national and international standards. Each individual IED in normal production is individually tested and calibrated before delivery.

Protection IEDs installed in an apparatus cubicle shall be checked in various ways before delivery. Insulation test (to check for bad wiring) and complete testing of all equipment with injection of currents and voltages is performed.

During the design of the station, certain steps shall be taken to limit the risk of failures, for example, all IED coils are connected to negative potential to earth to prevent contact corrosion due to electrolyte.

Certain circuits are continuously supervised to improve their availability. Examples of such supervisions are:

- Trip circuit supervision
- Protection DC supply supervision
- DC system earth fault supervision
- Busbar protection CT-circuit supervision

Protection IEDs shall be encapsulated according to environment requirements. In tropical climates, cubicles are provided with glass-door and ventilation louvres. Heaters for anti-condensation, often thermostatically controlled, are provided. Cubicle power-loss is limited not to exceed protection IED temperature limits, which is 55°C according to the IEC standard.

15.2 Commissioning tests

During commissioning all protection functions shall be verified with the setting values used at each plant. The commissioning tests must include verification of all circuits by green-lining the circuit diagrams and the configuration diagrams for the used functions.

Further, the settings for protection functions are tested and recorded carefully as outlined for the future periodic maintenance tests.

The final testing includes primary verification of all directional functions where load currents is checked on the local HMI and in PCM600.. The amplitudes and angles of all currents and voltages should be checked and the symmetry verified.

Directional functions have information about the measured direction and, for example, measured impedance. These values must be checked and verified as correct with the export or import of power available.

Finally, final trip tests must be performed. This involves activation of protection functions or tripping outputs with the circuit breaker closed and the tripping of the breaker verified. When several breakers are involved, each breaker must be checked individually and it must be verified that the other involved breakers are not tripped at the same time.

15.3 Periodic maintenance tests

The periodicity of all tests depends on several factors, for example the importance of the installation, environment conditions, simple or complex equipment, static or electromechanical IEDs, and so on.

The normal maintenance praxis of the user should be followed. However ABB proposal is to test:

Every second to third year

- Visual inspection of all equipment.
- Removal of dust on ventilation louvres and IEDs if necessary.
- Periodic maintenance test for protection IEDs of object where no redundant protections are provided.

Every four to six years

- Periodic maintenance test for protection IEDs of objects with redundant protection system.

First maintenance test should always be carried out after the first half year of service.

When protection IEDs are combined with built-in control, the test interval can be increased drastically, up to for instance 15 years, because the IED continuously reads service values, operates the breakers, and so on.

15.3.1 Visual inspection

Prior to testing, the protection IEDs should be inspected to detect any visible damage that may have occurred (for example, dirt or moisture deposits, overheating). Should burned contacts be observed when inspecting the IEDs, a diamond file or an extremely fine file can be used to polish the contacts. Emery cloth or similar products must not be used as insulating grains of abrasive may be deposited on the contact surfaces and cause failure.

Make sure that all IEDs are equipped with covers.

15.3.2 Maintenance tests

To be made after the first half year of service, then with the cycle as proposed above and after any suspected maloperation or change of the IED setting.

Testing of protection IEDs shall preferably be made with the primary circuit de-energized. The IED cannot protect the circuit during testing. Trained personnel may test one IED at a time on live circuits where redundant protection is installed and de-energization of the primary circuit is not allowed.

ABB protection IEDs are preferably tested by aid of components from the COMBITEST testing system described in information B03-9510 E. Main components are RTXP 8/18/24 test switch located to the left in each protection IED and RTXH 8/18/24 test handle, which is inserted in test switch at secondary testing. All necessary operations such as opening of trip circuits, short-circuiting of current circuits and opening of voltage circuits are automatically performed in the right order to allow for simple and safe secondary testing even with the object in service.

15.3.2.1 Preparation

Before starting maintenance testing, the test engineers should scrutinize applicable circuit diagrams and have the following documentation available:

- Test instructions for protection IEDs to be tested
- Test records from previous commissioning and maintenance tests
- List of valid settings
- Blank test records to fill in measured values

15.3.2.2 Recording

It is of utmost importance to carefully record the test results. Special test sheets covering the frequency of test, date of test and achieved test values should be used. IED setting list and protocols from previous tests should be available and all results should be compared for differences. At component failures, spare equipment is used and set to the requested value. A note of the exchange is made and the new measured values are recorded. Test records for several years of testing should be stored in a common file for a station, or a part of a station, to give a simple overview of the period of testing and achieved test values. These test records are valuable when analysis of service disturbances shall be done.

15.3.2.3 Secondary injection

The periodic maintenance test is done by secondary injection from a portable test set. Each protection shall be tested according to the secondary injection test information for the specific protection IED. Only the setting values adopted shall be checked for each protection function. If the discrepancy between obtained value and requested set value is too big the setting should be adjusted, the new value recorded and a note should be made in the test record.

15.3.2.4 Alarm test

When inserting the test handle the alarm and event signalling is normally blocked. This is done in the IED by setting the event reporting to *Off* during the test. This can be done when the test handle is inserted or the IED is set to test mode from the local HMI. At the end of the secondary injection test it should be checked that the event and alarm signalling is correct by activating the events and performing some selected tests.

15.3.2.5 Self supervision check

Once secondary testing has been completed, it should be checked that no self-supervision signals are activated continuously or sporadically. Especially check the time synchronization system, GPS or other, and communication signals, both station communication (61850/SPA/LON, and so on) and remote communication, for example, the line differential communication system.

15.3.2.6 Trip circuit check

When the protection IED undergoes an operational check, a tripping pulse is normally obtained on one or more of the output contacts and preferably on the test switch. The healthy circuit is of utmost importance for the protection operation. If the circuit is not provided with a continuous trip-circuit supervision, it is possible to check that circuit is really closed when the test-plug handle has been removed by using a high-ohmic voltmeter and measuring between the plus and the trip output on the panel. The measurement is then done through the tripping magnet of the circuit breaker and therefore the complete tripping circuit is checked.

Note, that the breaker must be closed.

Please observe that the test system does not have its built-in security during this test. If the instrument should be set on Amp instead of Volts, the circuit breaker naturally is tripped, therefore, greatest care is necessary.

Trip circuit from trip IEDs to circuit breaker is often supervised by trip-circuit supervision IED. It can then be checked that a circuit is healthy by opening tripping output terminals in the cubicle. When the terminal is opened, an alarm shall be achieved on the signal system after a delay of some seconds.

However, remember to close the circuit directly after the test and tighten the terminal carefully!

15.3.2.7 Measurement of service currents

After a maintenance test it is recommended to measure the service currents and service voltages recorded by the protection IED. The service values are checked on the local HMI or in PCM600. Ensure that the correct values and angles between voltages and currents are recorded. Also check the direction of directional functions such as Distance and directional overcurrent functions.

For transformer differential protection, the achieved differential current value is dependent on the tap changer position and can vary between less than 1% up to perhaps 10% of rated current. For line differential functions, the capacitive charging currents can normally be recorded as a differential current.

The zero-sequence current to earth-fault protection IEDs should be measured. The current amounts normally very small but normally it is possible to see if the current circuit is "alive".

The neutral-point voltage to an earth-fault IED is checked. The voltage is normally 0.1 to 1V secondary. However, voltage can be considerably higher due to harmonics. Normally a CVT secondary can have around 2.5 - 3% third-harmonic voltage.

15.3.2.8 Restoring

Maintenance is very important to improve the availability of the protection system by detecting failures before the protection is required to operate. There is however little point in testing healthy equipment and then putting it back into service with an open terminal, with a removed fuse or open miniature circuit breaker with an open connection, wrong setting, and so on.

Thus a list should be prepared of all items disturbed during test so that all can be put back into service quickly and without overlooking something. It should be put back into service item by item and signed by the responsible engineer.

Section 16 Fault tracing and repair

About this chapter

This chapter describes how to carry out fault tracing and if necessary, a change of circuit board.

16.1 Fault tracing

16.1.1 Information on the local HMI

If an internal fault has occurred, the local HMI displays information under **Main menu/Diagnostics/IED status/General**

Under the Diagnostics menus, indications of a possible internal failure (serious fault) or internal warning (minor problem) are listed.

Indications regarding the faulty unit are outlined in table 22.

Table 22: Self-supervision signals on the local HMI

HMI Signal Name:	Status	Description
INT Fail	OFF / ON	This signal will be active if one or more of the following internal signals are active; INT--NUMFAIL, INT--LMDERROR, INT--WATCHDOG, INT--APPERROR, INT--RTEERROR, INT--FTFERROR, or any of the HW dependent signals
INT Warning	OFF / ON	This signal will be active if one or more of the following internal signals are active; INT--RTCERROR, INT--IEC61850ERROR, INT--TIMESYNCHERROR
NUM Fail	OFF / ON	This signal will be active if one or more of the following internal signals are active; INT--WATCHDOG, INT--APPERROR, INT--RTEERROR, INT--FTFERROR
NUM Warning	OFF / ON	This signal will be active if one or more of the following internal signals are active; INT--RTCERROR, INT--IEC61850ERROR
ADMnn	READY / FAIL	Analog input module n failed. Signal activation will reset the IED
BIMnn	READY / FAIL	BIM error. Binary input module Error status. Signal activation will reset the IED

Table continues on next page

HMI Signal Name:	Status	Description
BOMn	READY / FAIL	BOM error. Binary output module Error status.
IOMn	READY / FAIL	IOM-error. Input/Output Module Error status.
MIMn	READY / FAIL	mA input module MIM1 failed. Signal activation will reset the IED
RTC	READY / FAIL	This signal will be active when there is a hardware error with the real time clock.
Time Sync	READY / FAIL	This signal will be active when the source of the time synchronization is lost, or when the time system has to make a time reset.
Application	READY / FAIL	This signal will be active if one or more of the application threads are not in the state that Runtime Engine expects. The states can be CREATED, INITIALIZED, RUNNING, etc.
RTE	READY / FAIL	This signal will be active if the Runtime Engine failed to do some actions with the application threads. The actions can be loading of settings or parameters for components, changing of setting groups, loading or unloading of application threads.
IEC61850	READY / FAIL	This signal will be active if the IEC61850 stack did not succeed in some actions like reading IEC61850 configuration, startup etc.
LMD	READY / FAIL	LON network interface, MIP/DPS, is in an unrecoverable error state.
LDCMxxx	READY / FAIL	Line Differential Communication Error status
OEM	READY / FAIL	Optical Ethernet Module error status.

Also the internal signals, such as INT--FAIL and INT--WARNING can be connected to binary output contacts for signalling to a control room.

In the IED Status - Information, the present information from the self-supervision function can be viewed. Indications of failure or warnings for each hardware module are provided, as well as information about the external time synchronization and the internal clock. All according to table 22. Loss of time synchronization can be considered as a warning only. The IED has full functionality without time synchronization.

16.1.2 Using front-connected PC or SMS

Here, two summary signals appear, self-supervision summary and numerical module status summary. These signals can be compared to the internal signals as:

- Self-supervision summary = INT--FAIL and INT--WARNING
- CPU-module status summary = INT--NUMFAIL and INT--NUMWARN

When an internal fault has occurred, extensive information about the fault can be retrieved from the list of internal events available in the SMS part:

TRM-STAT TermStatus - Internal Events

The list of internal events provides valuable information, which can be used during commissioning and fault tracing.

The internal events are time tagged with a resolution of 1ms and stored in a list. The list can store up to 40 events. The list is based on the FIFO principle, when it is full, the oldest event is overwritten. The list cannot be cleared and its content cannot be erased.

The internal events in this list not only refer to faults in the IED, but also to other activities, such as change of settings, clearing of disturbance reports, and loss of external time synchronization.

The information can only be retrieved from the Parameter Setting software package. The PC can be connected either to the port at the front or at the rear of the IED.

These events are logged as internal events.

Table 23: Events available for the internal event list in the IED

Event message:		Description	Generating signal:
INT--FAIL	Off	Internal fail status	INT--FAIL (reset event)
INT--FAIL			INT--FAIL (set event)
INT--WARNING	Off	Internal warning status	INT--WARNING (reset event)
INT--WARNING			INT--WARNING (set event)
INT--NUMFAIL	Off	Numerical module fatal error status	INT--NUMFAIL (reset event)
INT--NUMFAIL			INT--NUMFAIL (set event)
INT--NUMWARN	Off	Numerical module non-fatal error status	INT--NUMWARN (reset event)
INT--NUMWARN			INT--NUMWARN (set event)
IOn--Error	Off	In/Out module No. n status	IOn--Error (reset event)
IOn--Error			IOn--Error (set event)
ADMn-Error	Off	Analog/Digital module No. n status	ADMn-Error (reset event)
ADMn-Error			ADMn-Error (set event)
MIM1-Error	Off	mA-input module status	MIM1-Error (reset event)
MIM1-Error			MIM1-Error (set event)
INT--RTC	Off	Real Time Clock (RTC) status	INT--RTC (reset event)
INT--RTC			INT--RTC (set event)
Table continues on next page			

Event message:		Description	Generating signal:
INT--TSYNC	Off	External time synchronization status	INT--TSYNC (reset event)
INT--TSYNC			INT--TSYNC (set event)
INT--SETCHGD		Any settings in IED changed	
DRPC-CLEARED		All disturbances in Disturbance report cleared	

The events in the internal event list are time tagged with a resolution of 1ms.

This means that, when using the PC for fault tracing, it provides information on the:

- Module that should be changed.
- Sequence of faults, if more than one unit is faulty.
- Exact time when the fault occurred.

16.2 Repair instruction

Never disconnect the secondary connection of a current transformer circuit without short-circuiting the transformer's secondary winding. Operating a current transformer with the secondary winding open will cause a massive potential build up that may damage the transformer and may cause injuries to humans.

Never connect or disconnect a wire and/or a connector to or from a IED during normal service. Hazardous voltages and currents are present that may be lethal. Operation may be disrupted and IED and measuring circuitry may be damaged.

An alternative is to open the IED and send only the faulty circuit board to ABB for repair. When a printed circuit board is sent to ABB, it must always be placed in a metallic, ESD-proof, protection bag. The user can also purchase separate replacement modules.

Strictly follow the company and country safety regulations.

Most electronic components are sensitive to electrostatic discharge and latent damage may occur. Please observe usual procedures for handling electronics and also use an ESD wrist strap. A semi-conducting layer must be placed on the workbench and connected to earth.

Disassemble and reassemble the IED accordingly:

1. Switch off the dc supply.
2. Short-circuit the current transformers and disconnect all current and voltage connections from the IED.
3. Disconnect all signal wires by removing the female connectors.
4. Disconnect the optical fibers.
5. Unscrew the main back plate of the IED.
6. If the transformer module is to be changed:
   - Remove the IED from the panel if necessary.
   - Remove the rear plate of the IED.
   - Remove the front plate.
   - Remove the screws of the transformer input module, both front and rear.
7. Pull out the faulty module.
8. Check that the new module has a correct identity number.
9. Check that the springs on the card rail are connected to the corresponding metallic area on the circuit board when the new module is inserted.
10. Reassemble the IED.

If the IED has been calibrated with the system inputs, the calibration procedure must be performed again to maintain the total system accuracy.

16.3 Repair support

If an IED needs to be repaired, the whole IED must be removed and sent to an ABB Logistic Center. Before returning the material, an inquiry must be sent to the ABB Logistic Center.

e-mail: offer.selog@se.abb.com

16.4 Maintenance

The IED is self-supervised. No special maintenance is required.

Instructions from the power network company and other maintenance directives valid for maintenance of the power system must be followed.

Section 17 Glossary

About this chapter

This chapter contains a glossary with terms, acronyms and abbreviations used in ABB technical documentation.

AC	Alternating current
ACT	Application configuration tool within PCM600
A/D converter	Analog to digital converter
ADBS	Amplitude dead-band supervision
ADM	Analog digital conversion module, with time synchronization
ANSI	American National Standards Institute
AR	Autoreclosing
ArgNegRes	Setting parameter/ZD/
ArgDir	Setting parameter/ZD/
ASCT	Auxiliary summation current transformer
ASD	Adaptive signal detection
AWG	American Wire Gauge standard
BBP	Busbar protection
BFP	Breaker failure protection
BIM	Binary input module
BOM	Binary output module
BR	External bi-stable relay
BS	British standard
BSR	Binary signal transfer function, receiver blocks
BST	Binary signal transfer function, transmit blocks
C37.94	IEEE/ANSI protocol used when sending binary signals between IEDs
CAN	Controller Area Network. ISO standard (ISO 11898) for serial communication
CB	Circuit breaker
CBM	Combined backplane module

CCITT	Consultative Committee for International Telegraph and Telephony. A United Nations sponsored standards body within the International Telecommunications Union.
CCM	CAN carrier module
CCVT	Capacitive Coupled Voltage Transformer
Class C	Protection Current Transformer class as per IEEE/ ANSI
CMPPS	Combined mega pulses per second
CO cycle	Close-open cycle
Co-directional	Way of transmitting G.703 over a balanced line. Involves two twisted pairs making it possible to transmit information in both directions
COMTRADE	Standard format according to IEC 60255-24
Contra-directional	Way of transmitting G.703 over a balanced line. Involves four twisted pairs of with two are used for transmitting data in both directions, and two pairs for transmitting clock signals
CPU	Central processor unit
CR	Carrier receive
CRC	Cyclic redundancy check
CS	Carrier send
CT	Current transformer
CVT	Capacitive voltage transformer
DAR	Delayed auto-reclosing
DARPA	Defense Advanced Research Projects Agency (The US developer of the TCP/IP protocol etc.)
DBDL	Dead bus dead line
DBLL	Dead bus live line
DC	Direct current
DFT	Discrete Fourier transform
DIP-switch	Small switch mounted on a printed circuit board
DLLB	Dead line live bus
DNP	Distributed Network Protocol as per IEEE/ANSI Std. 1379-2000
DR	Disturbance recorder
DRAM	Dynamic random access memory
DRH	Disturbance report handler
DSP	Digital signal processor
DTT	Direct transfer trip scheme

EHV network	Extra high voltage network
EIA	Electronic Industries Association
EMC	Electro magnetic compatibility
EMF	Electro motive force
EMI	Electro magnetic interference
EnFP	End fault protection
ESD	Electrostatic discharge
FOX 20	Modular 20 channel telecommunication system for speech, data and protection signals
FOX 512/515	Access multiplexer
FOX 6Plus	Compact, time-division multiplexer for the transmission of up to seven duplex channels of digital data over optical fibers
G.703	Electrical and functional description for digital lines used by local telephone companies. Can be transported over balanced and unbalanced lines
GCM	Communication interface module with carrier of GPS receiver module
GDE	Graphical display editor within PCM600
GI	General interrogation command
GIS	Gas insulated switchgear
GOOSE	Generic object oriented substation event
GPS	Global positioning system
GSM	GPS time synchronization module
HDLC protocol	High level data link control, protocol based on the HDLC standard
HFBR connector type	Plastic fiber connector
HMI	Human machine interface
HSAR	High speed auto reclosing
HV	High voltage
HVDC	High voltage direct current
IDBS	Integrating dead band supervision
IEC	International Electrical Committee
IEC 60044-6	IEC Standard, Instrument transformers – Part 6: Requirements for protective current transformers for transient performance

IEC 60870-5-103	Communication standard for protective equipment. A serial master/slave protocol for point-to-point communication
IEC 61850	Substation Automation communication standard
IEEE	Institute of Electrical and Electronics Engineers
IEEE 802.12	A network technology standard that provides 100 Mbits/s on twisted-pair or optical fiber cable
IEEE P1386.1	PCI Mezzanine card (PMC) standard for local bus modules. References the CMC (IEEE P1386, also known as Common mezzanine card) standard for the mechanics and the PCI specifications from the PCI SIG (Special Interest Group) for the electrical EMF Electro Motive Force.
IED	Intelligent electronic device
I-GIS	Intelligent gas insulated switchgear
IOM	Binary input/output module
Instance	When several occurrences of the same function are available in the IED they are referred to as instances of that function. One instance of a function is identical to another of the same kind but will have a different number in the IED user interfaces. The word instance is sometimes defined as an item of information that is representative of a type. In the same way an instance of a function in the IED is representative of a type of function.
IP	1. Internet protocol. The network layer for the TCP/IP protocol suite widely used on Ethernet networks. IP is a connectionless, best-effort packet switching protocol. It provides packet routing, fragmentation and re-assembly through the data link layer. 2. Ingression protection according to IEC standard
IP 20	Ingression protection, according to IEC standard, level 20
IP 40	Ingression protection, according to IEC standard, level 40
IP 54	Ingression protection, according to IEC standard, level 54
IRF	Internal fail signal
IRIG-B:	InterRange Instrumentation Group Time code format B, standard 200
ITU	International Telecommunications Union
LAN	Local area network
LIB 520	High voltage software module
LCD	Liquid crystal display
LDCM	Line differential communication module
LDD	Local detection device

LED	Light emitting diode
LNT	LON network tool
LON	Local operating network
MCB	Miniature circuit breaker
MCM	Mezzanine carrier module
MIM	Milli-ampere module
MPM	Main processing module
MVB	Multifunction vehicle bus. Standardized serial bus originally developed for use in trains.
NCC	National Control Centre
NUM	Numerical module
OCO cycle	Open-close-open cycle
OCP	Overcurrent protection
OEM	Optical ethernet module
OLTC	On load tap changer
OV	Over voltage
Overreach	A term used to describe how the relay behaves during a fault condition. For example a distance relay is over-reaching when the impedance presented to it is smaller than the apparent impedance to the fault applied to the balance point, i.e. the set reach. The relay “sees” the fault but perhaps it should not have seen it.
PCI	Peripheral component interconnect, a local data bus
PCM	Pulse code modulation
PCM600	Protection and control IED manager
PC-MIP	Mezzanine card standard
PISA	Process interface for sensors & actuators
PMC	PCI Mezzanine card
POTT	Permissive overreach transfer trip
Process bus	Bus or LAN used at the process level, that is, in near proximity to the measured and/or controlled components
PSM	Power supply module
PST	Parameter setting tool within PCM600
PT ratio	Potential transformer or voltage transformer ratio
PUTT	Permissive underreach transfer trip
RASC	Synchrocheck relay, COMBIFLEX

RCA	Relay characteristic angle
REVAL	Evaluation software
RFPP	Resistance for phase-to-phase faults
RFPE	Resistance for phase-to-earth faults
RISC	Reduced instruction set computer
RMS value	Root mean square value
RS422	A balanced serial interface for the transmission of digital data in point-to-point connections
RS485	Serial link according to EIA standard RS485
RTC	Real time clock
RTU	Remote terminal unit
SA	Substation Automation
SC	Switch or push-button to close
SCS	Station control system
SCT	System configuration tool according to standard IEC 61850
SLM	Serial communication module. Used for SPA/LON/IEC communication.
SMA connector	Subminiature version A, A threaded connector with constant impedance.
SMT	Signal matrix tool within PCM600
SMS	Station monitoring system
SNTP	Simple network time protocol – is used to synchronize computer clocks on local area networks. This reduces the requirement to have accurate hardware clocks in every embedded system in a network. Each embedded node can instead synchronize with a remote clock, providing the required accuracy.
SPA	Strömberg protection acquisition, a serial master/slave protocol for point-to-point communication
SRY	Switch for CB ready condition
ST	Switch or push-button to trip
Starpoint	Neutral point of transformer or generator
SVC	Static VAr compensation
TC	Trip coil
TCS	Trip circuit supervision
TCP	Transmission control protocol. The most common transport layer protocol used on Ethernet and the Internet.

TCP/IP	Transmission control protocol over Internet Protocol. The de facto standard Ethernet protocols incorporated into 4.2BSD Unix. TCP/IP was developed by DARPA for internet working and encompasses both network layer and transport layer protocols. While TCP and IP specify two protocols at specific protocol layers, TCP/IP is often used to refer to the entire US Department of Defense protocol suite based upon these, including Telnet, FTP, UDP and RDP.
TEF	Time delayed earth-fault protection function
TNC connector	Threaded Neill Concelman, A threaded constant impedance version of a BNC connector
TPZ, TPY, TPX, TPS	Current transformer class according to IEC
Underreach	A term used to describe how the relay behaves during a fault condition. For example a distance relay is under-reaching when the impedance presented to it is greater than the apparent impedance to the fault applied to the balance point, i.e. the set reach. The relay does not “see” the fault but perhaps it should have seen it. See also Overreach.
U/I-PISA	Process interface components that deliver measured voltage and current values
UTC	Coordinated universal time. A coordinated time scale, maintained by the Bureau International des Poids et Mesures (BIPM), which forms the basis of a coordinated dissemination of standard frequencies and time signals. UTC is derived from International Atomic Time (TAI) by the addition of a whole number of "leap seconds" to synchronize it with Universal Time 1 (UT1), thus allowing for the eccentricity of the Earth"s orbit, the rotational axis tilt (23.5 degrees), but still showing the Earth"s irregular rotation, on which UT1 is based. The Coordinated Universal Time is expressed using a 24-hour clock and uses the Gregorian calendar. It is used for aeroplane and ship navigation, where it also sometimes known by the military name, "Zulu time". "Zulu" in the phonetic alphabet stands for "Z" which stands for longitude zero.
UV	Undervoltage
WEI	Weak end infeed logic
VT	Voltage transformer
X.21	A digital signalling interface primarily used for telecom equipment
$3I_O$	Three times zero-sequence current. Often referred to as the residual or the earth-fault current

$3U_O$	Three times the zero sequence voltage. Often referred to as the residual voltage or the neutral point voltage

Contact us

ABB AB
Substation Automation Products
SE-721 59 Västerås, Sweden
Phone +46 (0) 21 32 50 00
Fax +46 (0) 21 14 69 18

www.abb.com/substationautomation

Power and productivity
for a better world™